United States
Environmental Protection
Agency

Office of Water Regulations
and Standards (WH-552)
Industrial Technology Division
Washington, DC 20460

EPA 440/1-89-019.6
May 1989

Office of Water

EPA

Development Document for Effluent Limitations Guidelines and Standards for the Nonferrous Metals Manufacturing Point Source Category

FINAL

Volume VI
Primary Tungsten
Secondary Tungsten and Cobalt
Primary Molybdenum and Rhenium
Secondary Molybdenum and Vanadium

Printed on Recycled Paper

ORGANIZATION OF THIS DOCUMENT

This development document for the nonferrous metals manufacturing category consists of a general development document which considers the general and overall aspects of the regulation and 31 subcategory specific supplements. These parts are organized into 10 volumes as listed below.

The information in the general document and in the supplements is organized by sections with the same type of information reported in the same section of each part. Hence to find information on any specific aspect of the category one would need only look in the same section of the general document and the specific supplements of interest.

The ten volumes contain contain the following subjects:

Volume I	General Development Document
Volume II	Bauxite Refining Primary Aluminum Smelting Secondary Aluminum Smelting
Volume III	Primary Copper Smelting Primary Electrolytic Copper Refining Secondary Copper Refining Metallurgical Acid Plants
Volume IV	Primary Zinc Primary Lead Secondary Lead Primary Antimony
Volume V	Primary Precious Metals and Mercury Secondary Precious Metals Secondary Silver Secondary Mercury
Volume VI	Primary Tungsten Secondary Tungsten and Cobalt Primary Molybdenum and Rhenium Secondary Molybdenum and Vanadium
Volume VII	Primary Beryllium Primary Nickel and Cobalt Secondary Nickel Secondary Tin
Volume VIII	Primary Columbium and Tantalum Secondary Tantalum Secondary Uranium
Volume IX	Primary and Secondary Titanium Primary Zirconium and Hafnium
Volume X	Primary and Secondary Germanium and Gallium Primary Rare Earth Metals Secondary Indium

DEVELOPMENT DOCUMENT

for

EFFLUENT LIMITATIONS GUIDELINES AND STANDARDS

for the

NONFERROUS METALS MANUFACTURING POINT SOURCE CATEGORY

VOLUME VI

Primary Tungsten
Secondary Tungsten and Cobalt
Primary Molybdenum and Rhenium
Secondary Molybdenum and Vanadium

William K. Reilly
Administrator

Rebecca Hanmer, Acting
Assistant Administrator for Water

Martha Prothro, Director
Office of Water Regulations and Standards

Thomas P. O'Farrell, Director
Industrial Technology Division

Ernst P. Hall, P.E., Chief
Metals Industry Branch
and
Technical Project Officer

May 1989

U.S. Environmental Protection Agency
Office of Water
Office of Water Regulations and Standards
Industrial Technology Division
Washington, D. C. 20460

TABLE OF CONTENTS

Supplement	Page
Primary Tungsten	2925
Secondary Tungsten and Cobalt	3161
Primary Molybdenum and Rhenium	3341
Secondary Molybdenum and Vanadium	3487

For detailed contents see detailed contents list in individual supplement.

NONFERROUS METALS MANUFACTURING POINT SOURCE CATEGORY

DEVELOPMENT DOCUMENT SUPPLEMENT

for the

Primary Tungsten Subcategory

William K. Reilly
Administrator

Rebecca Hanmer
Acting Assistant Administrator for Water

Martha Prothro, Director
Office of Water Regulations and Standards

Thomas P. O'Farrell, Director
Industrial Technology Division

Ernst P. Hall, P.E., Chief
Metals Industry Branch
and
Technical Project Officer

May 1989

U.S. Environmental Protection Agency
Office of Water
Office of Water Regulations and Standards
Industrial Technology Division
Washington, D. C. 20460

TABLE OF CONTENTS

Section		Page
I	SUMMARY	2935
II	CONCLUSIONS	2937
III	SUBCATEGORY PROFILE	2963
	Description of Primary Tungsten Production	2963
	Raw Materials	2963
	Leaching of Ore Concentrates	2963
	Purification to Ammonium Paratungstate	2964
	Reduction to Metal	2965
	Process Wastewater Sources	2965
	Other Wastewater Sources	2966
	Age, Production and Process Profile	2966
IV	SUBCATEGORIZATION	2975
	Factors Considered in Subdividing the Primary Tungsten Subcategory	2976
	Other Factors	2977
	Production Normalizing Parameters	2980
V	WATER USE AND WASTEWATER CHARACTERISTICS	2979
	Wastewater Flow Rates	2980
	Wastewater Characteristics Data	2981
	Data Collection Portfolios	2981
	Field Sampling Data	2981
	Wastewater Characteristics and Flows by Subdivision	2983
	Tungstic Acid Rinse Water	2983
	Acid Leach Wet Air Pollution Control	2984
	Alkali Leach Wash	2984
	Ion-Exchange Raffinate	2985
	Calcium Tungstate Precipitation Wash	2985
	Crystallization and Drying of Ammonium Paratungstate	2985
	Ammonium Paratungstate Conversion to Oxides Wet Air Pollution Control	2986
	Reduction to Tungsten Wet Air Pollution Control	2987
	Reduction to Tungsten Metal Water of Formation	2987

TABLE OF CONTENTS (Continued)

Section		Page
VI	SELECTION OF POLLUTANT PARAMETERS	3047
	Conventional and Nonconventional Pollutants Parameters	3048
	Conventional and Nonconventional Pollutant Parameters Selected	3048
	Toxic Pollutants	3049
	Toxic Pollutants Never Detected	3049
	Toxic Pollutants Never Found Above Their Analytical Quantification Limit	3049
	Toxic Pollutants Present Below Concentrations Achievable by Treatment	3050
	Toxic Pollutants Detected in a Small Number of Sources	3051
	Toxic Pollutants Selected for Further Consideration in Limitations and Standards	3054
VII	CONTROL AND TREATMENT TECHNOLOGIES	3063
	Current Control and Treatment Practices	3063
	Tungstic Acid Rinse Water	3063
	Acid Leach Wet Air Pollution Control	3063
	Alkali Leach Wash	3064
	Ion-Exchange Raffinate	3064
	Calcium Tungstate Precipitation Wash	3064
	Crystallization and Drying of Ammonium Paratungstate	3064
	Ammonium Paratungstate Conversion to Oxides Wet Air Pollution Control	3065
	Reduction to Tungsten Wet Air Pollution Control	3065
	Reduction to Tungsten Water of Formation	3066
	Control and Treatment Options	3066
	Option A	3066
	Option B	3067
	Option C	3067
	Option E	3068
	Option F	3068

TABLE OF CONTENTS (Continued)

Section		Page
VIII	COSTS, ENERGY, AND NONWATER QUALITY ASPECTS	3069
	Treatment Options Costed for Existing Sources	3069
	Option A	3069
	Option B	3069
	Option C	3069
	Nonwater Quality Issues	3071
	Energy Requirements	3071
	Solid Waste	3071
	Air Pollution	3072
IX	BEST PRACTICABLE TECHNOLOGY CURRENTLY AVAILABLE	3075
	Technical Approach to BPT	3075
	Industry Cost and Pollutant Reduction Benefits	3077
	BPT Options Selection	3077
	Wastewater Discharge Rates	3079
	Tungstic Acid Rinse Water	3080
	Acid Leach Wet Air Pollution Control	3081
	Alkali Leach Wash	3081
	Ion-Exchange Raffinate	3082
	Calcium Tungstate Precipitate Wash	3083
	Crystallization and Drying of Ammonium Paratungstate	3083
	Ammonium Paratungstate Conversion to Oxides Wet Air Pollution Control	3084
	Reduction to Tungsten Wet Air Pollution Control	3085
	Reduction to Tungsten Water of Formation	3086
	Regulated Pollutant Parameters	3086
	Effluent Limitations	3087
X	BEST AVAILABLE TECHNOLOGY ECONOMICALLY ACHIEVABLE	3099
	Technical Approach to BAT	3099
	Option A	3099
	Option B	3100
	Option C	3101
	Option E	
	Option F	
	Industry Cost and Pollutant Reduction Benefits	3102
	Pollutant Reduction Benefits	3102
	Compliance Costs	3102
	BAT Option Selection	3103
	Wastewater Discharge Rates	3105
	Regulated Pollutant Parameters	3106
	Effluent Limitations	3107

TABLE OF CONTENTS (Continued)

Section		Page
XI	NEW SOURCE PERFORMANCE STANDARDS	3123
	Technical Approach to BDT	3123
	Option A	3123
	Option B	3123
	Option C	3124
	BDT Option Selection	3124
	Regulated Pollutant Parameters	3125
	New Source Performance Standards	3125
XII	PRETREATMENT STANDARDS	3135
	Technical Approach to Pretreatment	3135
	Industry Cost and Pollutant Reduction Benefits	3136
	Pretreatment Standards for Existing Sources	3136
	Option A	3136
	Option B	3136
	Option C	3136
	PSNS and PSES Options Selection	3137
	Regulated Pollutant Parameters	3137
	Pretreatment Standards	3138
XIII	BEST CONVENTIONAL POLLUTANT CONTROL TECHNOLOGY	3157

LIST OF TABLES

Table No.		Page
III-1	INITIAL OPERATING YEAR (RANGE) SUMMARY OF PLANTS IN THE PRIMARY TUNGSTEN SUBCATEGORY BY DISCHARGE TYPE	2968
III-2	PRODUCTION RANGES FOR THE PRIMARY TUNGSTEN SUBCATEGORY	2969
III-3	TREATMENT LEVEL SUMMARY FOR THE PRIMARY TUNGSTEN INDUSTRY	2969
III-4	SUMMARY OF SUBCATEGORY PROCESSES AND ASSOCIATED WASTE STREAMS	2970
III-5	PRODUCTION PROCESSES UTILIZED BY THE PRIMARY TUNGSTEN INDUSTRY (10 PLANTS)	2971
III-6	TREATMENT PROCESSES UTILIZED BY THE PRIMARY TUNGSTEN SUBCATEGORY (10 PLANTS)	2972
V-1	WATER USE AND DISCHARGE RATES FOR TUNGSTIC ACID RINSE WATER	2988
V-2	WATER USE AND DISCHARGE RATES FOR ACID LEACH WET AIR POLLUTION CONTROL	2988
V-3	WATER USE AND DISCHARGE RATES FOR ALKALI LEACH WASH	2989
V-4	WATER USE AND DISCHARGE RATES FOR ION EXCHANGE RAFFINATE	2989
V-5	WATER USE AND DISCHARGE RATES FOR CALCIUM TUNGSTATE PRECIPITATE WASH	2990
V-6	WATER USE AND DISCHARGE RATES FOR AMMONIUM PARATUNGSTATE CRYSTALLIZATION AND DRYING	2991
V-7	WATER USE AND DISCHARGE RATES FOR APT CONVERSION TO OXIDES WET AIR POLLUTION CONTROL	2992
V-8	WATER USE AND DISCHARGE CHARACTERISTICS FOR APT CONVERSION TO OXIDES WATER OF FORMATION	2993
V-9	WATER USE AND DISCHARGE RATES FOR REDUCTION TO TUNGSTEN WET AIR POLLUTION CONTROL	2994
V-10	WATER USE AND DISCHARGE RATES FOR REDUCTION TO TUNGSTEN WATER OF FORMATION	2995

LIST OF TABLES (Continued)

Table No.		Page
V-11	WATER USE AND DISCHARGE RATES FOR TUNGSTEN POWDER ACID LEACH AND WASH	2995
V-12	PRIMARY TUNGSTEN SAMPLING DATA TUNGSTIC ACID RINSE RAW WASTEWATER	2996
V-13	PRIMARY TUNGSTEN SAMPLING DATA ION-EXCHANGE RAFFINATE RAW WASTEWATER	3003
V-14	PRIMARY TUNGSTEN SAMPLING DATA SYNTHETIC SCHEELITE FILTRATE RAW WASTEWATER	3011
V-15	PRIMARY TUNGSTEN SAMPLING DATA OXIDES REDUCTION FURNACE SCRUBBER RAW WASTEWATER	3015
V-16	PRIMARY TUNGSTEN SAMPLING DATA REDUCTION TO TUNGSTEN WATER OF FORMATION RAW WASTEWATER	3017
V-17	PRIMARY TUNGSTEN SAMPLING DATA TREATMENT PLANT SAMPLES - PLANT B	3021
V-18	PRIMARY TUNGSTEN SAMPLING DATA TREATMENT PLANT SAMPLES - PLANT C	3024
V-19	PRIMARY TUNGSTEN SAMPLING DATA TREATMENT PLANT SAMPLES - PLANT E	3032
VI-1	FREQUENCY OF OCCURRENCE OF TOXIC POLLUTANTS PRIMARY TUNGSTEN RAW WASTEWATER	3057
VI-2	TOXIC POLLUTANTS NEVER DETECTED	3061

LIST OF TABLES (Continued)

Table No.		Page
VIII-1	COST OF COMPLIANCE FOR THE PRIMARY TUNGSTEN SUBCATEGORY DIRECT DISCHARGERS	3073
VIII-2	COST OF COMPLIANCE FOR THE PRIMARY TUNGSTEN SUBCATEGORY INDIRECT DISCHARGERS	3073
IX-1	BPT WASTEWATER DISCHARGE RATES FOR THE PRIMARY TUNGSTEN SUBCATEGORY	3088
IX-2	BPT EFFLUENT LIMITATIONS FOR THE PRIMARY TUNGSTEN SUBCATEGORY	3090
X-1	CURRENT RECYCLE PRACTICES WITHIN THE PRIMARY TUNGSTEN SUBCATEGORY	3108
X-2	POLLUTANT REDUCTION BENEFITS FOR DIRECT DISCHARGERS	3109
X-3	BAT WASTEWATER DISCHARGE RATES FOR THE PRIMARY TUNGSTEN SUBCATEGORY	3110
X-4	BAT EFFLUENT LIMITATIONS FOR THE PRIMARY TUNGSTEN SUBCATEGORY	3112
XI-1	NSPS WASTEWATER DISCHARGE RATES FOR THE PRIMARY TUNGSTEN SUBCATEGORY	3126
XI-2	NSPS FOR THE PRIMARY TUNGSTEN SUBCATEGORY	3128
XII-1	POLLUTANT REDUCTION BENEFITS FOR INDIRECT DISCHARGERS	3139
XII-2	PSES AND PSNS WASTEWATER DISCHARGE RATES FOR THE PRIMARY TUNGSTEN SUBCATEGORY	3140
XII-3	PSES FOR THE PRIMARY TUNGSTEN SUBCATEGORY	3142
XII-4	PSNS FOR THE PRIMARY TUNGSTEN SUBCATEGORY	3149

LIST OF FIGURES

Figure No.		Page
III-1	PRIMARY TUNGSTEN PRODUCTION PROCESS	2973
III-2	GEOGRAPHIC LOCATIONS OF THE PRIMARY TUNGSTEN SUBCATEGORY PLANTS	2974
V-1	SAMPLING SITES AT PRIMARY TUNGSTEN PLANT A	3038
V-2	SAMPLING SITES AT PRIMARY TUNGSTEN PLANT B	3039
V-3	SAMPLING SITES AT PRIMARY TUNGSTEN PLANT C	3040
V-4	SAMPLING SITES AT PRIMARY TUNGSTEN PLANT D	3041
V-5	SAMPLING SITES AT PRIMARY TUNGSTEN PLANT E	3042
V-6	SAMPLING SITES AT PRIMARY TUNGSTEN PLANT F	3043
IX-1	BPT TREATMENT SCHEME FOR PRIMARY TUNGSTEN SUBCATEGORY	3097
X-1	BAT TREATMENT SCHEME FOR OPTION A	3119
X-2	BAT TREATMENT SCHEME FOR OPTION B	3120
X-3	BAT TREATMENT SCHEME FOR OPTION C	3121

SECTION I

SUMMARY

This document provides the technical basis for promulgating effluent limitations based on best practicable technology (BPT) and best available technology (BAT) for existing direct dischargers, pretreatment standards for existing indirect dischargers (PSES), pretreatment standards for new indirect dischargers (PSNS), and standards of performance for new source direct dischargers (NSPS) for plants in the primary tungsten subcategory.

The primary tungsten subcategory consists of 17 plants. Four plants discharge directly to rivers, lakes, or streams; six discharge to publicly owned treatment works (POTW); and seven achieve zero discharge of process wastewater.

EPA first studied the primary tungsten subcategory to determine whether differences in raw materials, final products, manufacturing processes, equipment, age and size of plants, water usage, required the development of separate effluent limitations and standards for different segments of the subcategory. This involved a detailed analysis of wastewater discharge and treated effluent characteristics, including (1) the sources and volume of water used, the processes used, and the sources of pollutants and wastewaters in the plant; and (2) the constituents of wastewaters, including toxic pollutants.

Several distinct control and treatment technologies (both in-plant and end-of-pipe) applicable to the primary tungsten subcategory were identified. The Agency analyzed both historical and newly generated data on the performance of these technologies, including their nonwater quality environmental impacts and air quality, solid waste generation, and energy requirements. EPA also studied various flow reduction techniques reported in the data collection portfolios (dcp) and plant visits.

Engineering costs were prepared for each of the control and treatment options considered for the subcategory. These costs were then used by the Agency to estimate the impact of implementing the various options on the subcategory. For each control and treatment option that the Agency found to be most effective and technically feasible in controlling the discharge of pollutants, the number of potential closures, number of employees affected, and impact on price were estimated. These results are reported in a separate document entitled <u>The Economic Impact Analysis of Effluent Standards and Limitations Guidelines and Standards for the Nonferrous Smelting and Refining Industry</u>.

Based on consideration of the above factors, EPA identified various control and treatment technologies which formed the basis

for BPT and selected control and treatment appropriate for each set of standards and limitations. The mass limitations and standards for BPT, BAT, NSPS, PSES, and PSNS are presented in Section II.

After examining the various treatment technologies, the Agency has identified BPT to represent the average of the best existing technology. Metals removal based on lime precipitation and sedimentation technology is the basis for the BPT limitations. Steam stripping was selected as the technology basis for ammonia limitations. To meet the BPT effluent limitations based on this technology, the primary tungsten subcategory is expected to incur a capital cost of $0.115 million (1982 dollars) and an annual cost of $0.168 million (1982 dollars).

For BAT, the Agency has built upon the BPT technology basis by adding in-process control technologies which include recycle of process water from air pollution control waste streams. Filtration is added as an effluent polishing step to the end-of-pipe treatment scheme. To meet the BAT effluent limitations based on this technology, the primary tungsten subcategory is estimated to incur a capital cost of $0.773 million (1982 dollars) and an annual cost of $1.0 million (1982 dollars).

BDT, which is the technical basis of NSPS, is equivalent to BAT. In selecting BDT, EPA recognizes that new plants have the opportunity to implement the best and most efficient manufacturing processes and treatment technology. As such, the technology basis of BAT has been determined as the best demonstrated technology.

The technology basis for PSES is equivalent to BAT. To meet the pretreatment standards for existing sources, the primary tungsten subcategory is estimated to incur a capital cost of $0.445 million (1982 dollars) and an annual cost of $0.568 million (1982 dollars). For PSNS, the Agency selected end-of-pipe treatment and in-process flow reduction control techniques equivalent to NSPS.

After promulgation of the final rule, AMAX, Inc. with GTE Products Corp., as an intervenor filed a petition for review of the final rule. After a full review of the technical problems and new data, the Agency agreed in a settlement agreement to amend the regulation in three respects: increase the ammonia limitation for uncomingled ion exchange raffinate, add a building block for alkali leach condensate, and revise the PNP, to the element tungsten rather than specific salts. EPA proposed these amendments to the Primary Tungsten Subcategory regulation on January 22, 1987 (52 FR 2480), and promulgated these amendments on January 21, 1988 (53 FR 1704). Details of the settlement can be found at 52 FR 2480.

SECTION II

CONCLUSIONS

EPA has divided the primary tungsten subcategory into 14 subdivisions for the purpose of effluent limitations and standards. These subdivisions are:

(a) Tungstic acid rinse,
(b) Acid leaching wet air pollution control,
(c) Alkali leach wash,
(d) Alkali leach wash condensate,
(e) Ion exchange raffinate, (commingled with other process and nonprocess streams)
(f) Ion exchange raffinate (not commingled with other process and nonprocess streams),
(g) Calcium tungstate precipitate wash,
(h) Crystallization and drying of ammonium paratungstate,
(i) Ammonium paratungstate conversion to oxides wet air pollution control,
(j) Ammonia paratungstate conversion to oxides water of formation,
(k) Reduction to tungsten wet air pollution control,
(l) Reduction to tungsten water of formation,
(m) Tungsten powder acid leach and wash, and
(n) Molybdenum sulfide precipitation wet air pollution control.

BPT is promulgated based on the performance achievable by the application of chemical precipitation and sedimentation (lime and settle) technology, along with preliminary treatment consisting of ammonia steam stripping for selected waste streams. The following BPT effluent limitations are promulgated:

(a) Tungstic Acid Rinse BPT

Pollutant or Pollutant Property	Maximum for Any One Day	Maximum for Monthly Average
Metric Units - mg/kg of tungstic acid (as W) produced English Units - lbs/million lbs of tungstic acid (as W) produced		
Lead	17.230	8.205
Zinc	59.900	25.030
Ammonia (as N)	5,469.000	2,404.000
TSS	1,682.000	800.000
pH	Within the range of 7.0 to 10.0 at all times	

(b) Acid Leach Wet Air Pollution Control BPT

Pollutant or Pollutant Property	Maximum for Any One Day	Maximum for Monthly Average
Metric Units - mg/kg of tungstic acid (as W) produced English Units - lbs/million lbs of tungstic acid (as W) produced		
Lead	15.040	7.162
Zinc	52.280	21.840
Ammonia (as N)	4,773.000	2,098.000
TSS	1,468.000	698.300
pH	Within the range of 7.0 to 10.0 at all times	

(c) Alkali Leach Wash BPT

Pollutant or Pollutant Property	Maximum for Any One Day	Maximum for Monthly Average
Metric Units - mg/kg of sodium tungstate (as W) produced English Units - lbs/million lbs of sodium tungstate (as W) produced		
Lead	0.000	0.000
Zinc	0.000	0.000
Ammonia (as N)	0.000	0.000
TSS	0.000	0.000
pH	Within the range of 7.0 to 10.0 at all times	

(d) Alkali Leach Wash Condensate BPT

Pollutant or Pollutant Property	Maximum for Any One Day	Maximum for Monthly Average
Metric Units - mg/kg of sodium tungstate (as W) produced English Units - lbs/million lbs of sodium tungstate (as W) produced		
Lead	8.057	3.837
Zinc	28.011	11.700
Ammonia (as N)	2,557.000	1,124.000
TSS	786.200	374.100
pH	Within the range of 7.0 to 10.0 at all times	

(e) Ion-Exchange Raffinate (commingled with other Process or Nonprocess waters) BPT

Pollutant or Pollutant Property	Maximum for Any One Day	Maximum for Monthly Average
Metric Units - mg/kg of ammonium tungstate (as W) produced English Units - lbs/million lbs of ammonium tungstate (as W) produced		
Lead	37.160	17.700
Zinc	129.200	53.970
Ammonia (as N)	11,790.000	5,185.000
TSS	3,627.000	1,726.000
pH	Within the range of 7.0 to 10.0 at all times	

(f) Ion-Exchange Raffinate (Not Commingled with other Process or Nonprocess waters) BPT

Pollutant or Pollutant Property	Maximum for Any One Day	Maximum for Monthly Average
Metric Units - mg/kg of ammonium tungstate (as W) produced English Units - lbs/million lbs of ammonium tungstate (as W) produced		
Lead	37.160	17.700
Zinc	192.200	53.970
Ammonia (as N)	11,790.000	5,185.000
TSS	3,627.000	1,726.000
pH	Within the range of 7.0 to 10.0 at all times	

(g) Calcium Tungstate Precipitate Wash BPT

Pollutant or Pollutant Property	Maximum for Any One Day	Maximum for Monthly Average
Metric Units - mg/kg of calcium tungstate (as W) produced English Units - lbs/million lbs of calcium tungstate (as W) produced		
Lead	31.000	14.760
Zinc	107.800	45.020
Ammonia (as N)	9,838.000	4,325.000
TSS	3,026.000	1,439.000
pH	Within the range of 7.0 to 10.0 at all times	

(h) Crystallization and Drying of Ammonium Paratungstate BPT

Pollutant or Pollutant Property	Maximum for Any One Day	Maximum for Monthly Average
Metric Units - mg/kg of ammonium paratungstate (as W) produced English Units - lbs/million lbs of ammonium paratungstate (as W) produced		
Lead	0.000	0.000
Zinc	0.000	0.000
Ammonia (as N)	0.000	0.000
TSS	0.000	0.000
pH	Within the range of 7.0 to 10.0 at all times	

(i) Ammonium Paratungstate Conversion to Oxides Wet Air Pollution Control BPT

Pollutant or Pollutant Property	Maximum for Any One Day	Maximum for Monthly Average
Metric Units - mg/kg of tungstic oxide (as W) produced English Units - lbs/million lbs of tungstic oxide (as W) produced		
Lead	11.600	5.523
Zinc	40.320	16.850
Ammonia (as N)	3,681.000	1,618.000
TSS	1,132.000	538.500
pH	Within the range of 7.0 to 10.0 at all times	

(j) Ammonium Paratungstate Conversion to Oxides Water of Formation BPT

Pollutant or Pollutant Property	Maximum for Any One Day	Maximum for Monthly Average
Metric Units - mg/kg of tungstic oxide (as W) produced English Units - lbs/million lbs of tungstic oxide (as W) produced		
Lead	0.026	0.013
Zinc	0.092	0.038
Ammonia (as N)	8.398	3.692
TSS	2.583	1.229
pH	Within the range of 7.0 to 10.0 at all times	

(k) Reduction to Tungsten Wet Air Pollution Control BPT

Pollutant or Pollutant Property	Maximum for Any One Day	Maximum for Monthly Average
Metric Units - mg/kg of tungsten metal produced English Units - lbs/million lbs of tungsten metal produced		
Lead	12.940	6.161
Zinc	44.970	18.790
Ammonia (as N)	4,106.000	1,805.000
TSS	1,263.000	600.700
pH	Within the range of 7.0 to 10.0 at all times	

(l) Reduction to Tungsten Water of Formation BPT

Pollutant or Pollutant Property	Maximum for Any One Day	Maximum for Monthly Average
Metric Units - mg/kg of tungsten metal reduced English Units - lbs/million lbs of tungsten metal reduced		
Lead	0.205	0.098
Zinc	0.714	0.298
Ammonia (as N)	65.190	28.660
TSS	20.050	9.536
pH	Within the range of 7.0 to 10.0 at all times	

(m) Tungsten Powder Acid Leach and Wash BPT

Pollutant or Pollutant Property	Maximum for Any One Day	Maximum for Monthly Average
Metric Units - mg/kg of tungsten metal produced English Units - lbs/million lbs of tungsten metal produced		
Lead	1.008	0.480
Zinc	3.504	1.464
Ammonia (as N)	319.900	140.700
TSS	98.400	46.800
pH	Within the range of 7.0 to 10.0 at all times	

(n) Molybdenum Sulfide Precipitation Wet Air Pollution Control BPT

Pollutant or Pollutant Property	Maximum for Any One Day	Maximum for Monthly Average
Metric Units - mg/kg of tungsten metal produced English Units - lbs/million lbs of tungsten metal produced		
Lead	0.000	0.000
Zinc	0.000	0.000
Ammonia (as N)	0.000	0.000
TSS	0.000	0.000
pH	Within the range of 7.0 to 10.0 at all times	

BAT is promulgated based on the performance achievable by the application of chemical precipitation, sedimentation, and multimedia filtration (lime, settle, and filter) technology and in-process flow reduction methods, along with preliminary treatment consisting of ammonia steam stripping for selected waste streams. The following BAT effluent limitations are promulgated:

(a) Tungstic Acid Rinse BAT

Pollutant or Pollutant Property	Maximum for Any One Day	Maximum for Monthly Average
Metric Units - mg/kg of tungstic acid (as W) produced English Units - lbs/million lbs of tungstic acid (as W) produced		
Lead	11.490	5.333
Zinc	41.850	17.230
Ammonia (as N)	5,469.000	2,404.000

(b) Acid Leach Wet Air Pollution Control BAT

Pollutant or Pollutant Property	Maximum for Any One Day	Maximum for Monthly Average
Metric Units - mg/kg of tungstic acid (as W) produced English Units - lbs/million lbs of tungstic acid (as W) produced		
Lead	1.003	0.466
Zinc	3.653	1.504
Ammonia (as N)	477.400	209.900

(c) Alkali Leach Wash BAT

Pollutant or Pollutant Property	Maximum for Any One Day	Maximum for Monthly Average
Metric Units - mg/kg of sodium tungstate (as W) produced English Units - lbs/million lbs of sodium tungstate (as W) produced		
Lead	0.000	0.000
Zinc	0.000	0.000
Ammonia (as N)	0.000	0.000

(d) Alkali Leach Wash Condensate BAT

Pollutant or Pollutant Property	Maximum for Any One Day	Maximum for Monthly Average
Metric Units - mg/kg of sodium tungstate (as W) produced English Units - lbs/million lbs of sodium tungstate (as W) produced		
Lead	5.372	2.494
Zinc	19.570	8.057
Ammonia (as N)	2,557.000	1,124.000

(e) Ion-Exchange Raffinate (Commingled with other Process or Nonprocess Waters) BAT

Pollutant or Pollutant Property	Maximum for Any One Day	Maximum for Monthly Average
Metric Units - mg/kg of ammonium tungstate (as W) produced English Units - lbs/million lbs of ammonium tungstate (as W) produced		
Lead	24.780	11.500
Zinc	90.240	37.160
Ammonia (as N)	11,790.000	5,185.000

(f) Ion-Exchange Raffinate (Not Commingled with other Process or Nonprocess Waters)[1] BAT

Pollutant or Pollutant Property	Maximum for Any One Day	Maximum for Monthly Average
Metric Units - mg/kg of ammonium tungstate (as W) produced English Units - lbs/million lbs of ammonium tungstate (as W) produced		
Lead	24.780	11.500
Zinc	90.240	37.160
Ammonia (as N)	11,790.000	5,185.000

[1]The effluent limitation for this pollutant does not apply if (a) the mother liquor feed to the ion exchange process or the raffinate from the ion exchange process contains sulfates at concentrations exceeding 1000 mg/l; (b) this mother liquor or raffinate is treated by ammonia steam stripping; and (c) such mother liquor or raffinate is not commingled with any other process or nonprocess waters prior to steam stripping for ammonia removal.

(g) Calcium Tungstate Precipitate Wash BAT

Pollutant or Pollutant Property	Maximum for Any One Day	Maximum for Monthly Average
Metric Units - mg/kg of calcium tungstate (as W) produced English Units - lbs/million lbs of calcium tungstate (as W) produced		
Lead	20.670	9.594
Zinc	75.280	31.000
Ammonia (as N)	9,838.000	4,325.000

(h) Crystallization and Drying of Ammonium Paratungstate BAT

Pollutant or Pollutant Property	Maximum for Any One Day	Maximum for Monthly Average
Metric Units - mg/kg of ammonium paratungstate (as W) produced English Units - lbs/million lbs of ammonium paratungstate (as W) produced		
Lead	0.000	0.000
Zinc	0.000	0.000
Ammonia (as N)	0.000	0.000

(i) Ammonium Paratungstate Conversion to Oxides Wet Air Pollution Control BAT

Pollutant or Pollutant Property	Maximum for Any One Day	Maximum for Monthly Average
Metric Units - mg/kg of tungstic oxide (as W) produced English Units - lbs/million lbs of tungstic oxide (as W) produced		
Lead	0.773	0.359
Zinc	2.817	1.160
Ammonia (as N)	368.200	161.900

(j) Ammonium Paratungstate Conversion to Oxides Water of Formation BAT

Pollutant or Pollutant Property	Maximum for Any One Day	Maximum for Monthly Average
Metric Units - mg/kg of tungstic oxide (as W) produced English Units - lbs/million lbs of tungstic oxide (as W) produced		
Lead	0.018	0.008
Zinc	0.064	0.026
Ammonia (as N)	8.398	3.692

(k) Reduction to Tungsten Wet Air Pollution Control

Pollutant or Pollutant Property	Maximum for Any One Day	Maximum for Monthly Average
Metric Units - mg/kg of tungsten metal produced English Units - lbs/million lbs of tungsten metal produced		
Lead	0.862	0.400
Zinc	3.142	1.294
Ammonia (as N)	410.600	180.500

(l) Reduction to Tungsten Water of Formation BAT

Pollutant or Pollutant Property	Maximum for Any One Day	Maximum for Monthly Average
Metric Units - mg/kg of tungsten metal reduced English Units - lbs/million lbs of tungsten metal reduced		
Lead	0.137	0.064
Zinc	0.499	0.205
Ammonia (as N)	65.190	28.660

(m) Tungsten Powder Acid Leach and Wash BAT

Pollutant or Pollutant Property	Maximum for Any One Day	Maximum for Monthly Average
Metric Units - mg/kg of tungsten metal produced English Units - lbs/million lbs of tungsten metal produced		
Lead	0.672	0.312
Zinc	2.448	1.008
Ammonia (as N)	319.900	140.700

(n) Molybdenum Sulfide Precipitation Wet Air Pollution Control BAT

Pollutant or Pollutant Property	Maximum for Any One Day	Maximum for Monthly Average
Metric Units - mg/kg of tungsten metal produced English Units - lbs/million lbs of tungsten metal produced		
Lead	0.000	0.000
Zinc	0.000	0.000
Ammonia (as N)	0.000	0.000

NSPS are promulgated based on the performance achievable by the application of chemical precipitation, sedimentation, and multimedia filtration (lime, settle, and filter) technology, and in-process flow reduction control methods, along with preliminary treatment consisting of ammonia steam stripping for selected waste streams. The following effluent standards are promulgated for new sources:

(a) Tungstic Acid Rinse NSPS NSPS

Pollutant or Pollutant Property	Maximum for Any One Day	Maximum for Monthly Average
Metric Units - mg/kg of tungstic acid (as W) produced English Units - lbs/million lbs of tungstic acid (as W) produced		
Lead	11.490	5.333
Zinc	41.850	17.230
Ammonia (as N)	5,469.000	2,404.000
TSS	615.400	492.300
pH	Within the range of 7.0 to 10.0 at all times	

(b) Acid Leach Wet Air Pollution Control NSPS NSPS

Pollutant or Pollutant Property	Maximum for Any One Day	Maximum for Monthly Average
Metric Units - mg/kg of tungstic acid (as W) produced English Units - lbs/million lbs of tungstic acid (as W) produced		
Lead	1.003	0.466
Zinc	3.653	1.504
Ammonia (as N)	477.400	209.900
TSS	53.720	42.970
pH	Within the range of 7.0 to 10.0 at all times	

(c) Alkali Leach Wash NSPS

Pollutant or Pollutant Property	Maximum for Any One Day	Maximum for Monthly Average
Metric Units - mg/kg of sodium tungstate (as W) produced English Units - lbs/million lbs of sodium tungstate (as W) produced		
Lead	0.000	0.000
Zinc	0.000	0.000
Ammonia (as N)	0.000	0.000
TSS	0.000	0.000
pH	Within the range of 7.0 to 10.0 at all times	

(d) Alkali Leach Wash Condensate NSPS

Pollutant or Pollutant Property	Maximum for Any One Day	Maximum for Monthly Average
Metric Units - mg/kg of sodium tungstate (as W) produced English Units - lbs/million lbs of sodium tungstate (as W) produced		
Lead	5.372	2.494
Zinc	19.570	8.057
Ammonia (as N)	2,557.000	1,124.000
TSS	287.800	229.600
pH	Within the range of 7.0 to 10.0 at all times	

(e) Ion-Exchange Raffinate (Commingled with other Process or Nonprocess Waters) NSPS

Pollutant or Pollutant Property	Maximum for Any One Day	Maximum for Monthly Average
Metric Units - mg/kg of ammonium tungstate (as W) produced English Units - lbs/million lbs of ammonium tungstate (as W) produced		
Lead	24.780	11.500
Zinc	90.240	37.160
Ammonia (as N)	11,790.000	5,185.000
TSS	1,327.000	1,062.000
pH	Within the range of 7.0 to 10.0 at all times	

(f) Ion-Exchange Raffinate (Not Commingled with other Process or Nonprocess Waters)[1] NSPS

Pollutant or Pollutant Property	Maximum for Any One Day	Maximum for Monthly Average
Metric Units - mg/kg of ammonium tungstate (as W) produced English Units - lbs/million lbs of ammonium tungstate (as W) produced		
Lead	24.780	11.500
Zinc	90.240	37.160
Ammonia (as N)	11,790.000	5,185.000
TSS	1,327.000	1,062.000
pH	Within the range of 7.0 to 10.0 at all times	

[1]The new source standard for this pollutant does not apply if (a) the mother liquor feed to the ion exchange process or the raffinate from the ion exchange process contains sulfates at concentrations exceeding 1000 mg/l; (b) this mother liquor or raffinate is treated by ammonia steam stripping; and (c) such mother liquor or raffinate is not commingled with any other process or nonprocess waters prior to steam stripping for ammonia removal.

(g) Calcium Tungstate Precipitate Wash NSPS

Pollutant or Pollutant Property	Maximum for Any One Day	Maximum for Monthly Average
Metric Units - mg/kg of calcium tungstate (as W) produced English Units - lbs/million lbs of calcium tungstate (as W) produced		
Lead	20.670	9.594
Zinc	75.280	31.000
Ammonia (as N)	9,838.000	4,325.000
TSS	1,107.000	885.600
pH	Within the range of 7.0 to 10.0 at all times	

(h) Crystallization and Drying of Ammonium Paratungstate NSPS

Pollutant or Pollutant Property	Maximum for Any One Day	Maximum for Monthly Average
Metric Units - mg/kg of ammonium paratungstate (as W) produced English Units - lbs/million lbs of ammonium paratungstate (as W) produced		
Lead	0.000	0.000
Zinc	0.000	0.000
Ammonia (as N)	0.000	0.000
TSS	0.000	0.000
pH	Within the range of 7.0 to 10.0 at all times	

(i) Ammonium Paratungstate Conversion to Oxides Wet Air Pollution Control NSPS

Pollutant or Pollutant Property	Maximum for Any One Day	Maximum for Monthly Average
Metric Units - mg/kg of tungstic oxide (as W) produced English Units - lbs/million lbs of tungstic oxide (as W) produced		
Lead	0.773	0.359
Zinc	2.817	1.160
Ammonia (as N)	368.200	161.900
TSS	41.430	33.150
pH	Within the range of 7.0 to 10.0 at all times	

(j) Ammonium Paratungstate Conversion to Oxides Water of Formation NSPS

Pollutant or Pollutant Property	Maximum for Any One Day	Maximum for Monthly Average
Metric Units - mg/kg of tungstic oxide (as W) produced English Units - lbs/million lbs of tungstic oxide (as W) produced		
Lead	0.018	0.008
Zinc	0.064	0.026
Ammonia (as N)	8.398	3.692
TSS	0.945	0.756
pH	Within the range of 7.0 to 10.0 at all times	

(k) Reduction to Tungsten Wet Air Pollution Control NSPS

Pollutant or Pollutant Property	Maximum for Any One Day	Maximum for Monthly Average
Metric Units - mg/kg of tungsten metal produced English Units - lbs/million lbs of tungsten metal produced		
Lead	0.862	0.400
Zinc	3.142	1.294
Ammonia (as N)	410.600	180.500
TSS	46.200	36.960
pH	Within the range of 7.0 to 10.0 at all times	

(l) Reduction to Tungsten Water of Formation NSPS

Pollutant or Pollutant Property	Maximum for Any One Day	Maximum for Monthly Average
Metric Units - mg/kg of tungsten metal produced English Units - lbs/million lbs of tungsten metal produced		
Lead	0.137	0.064
Zinc	0.499	0.205
Ammonia (as N)	65.190	28.660
TSS	7.335	5.868
pH	Within the range of 7.0 to 10.0 at all times	

(m) Tungsten Power Acid Leach and Wash NSPS

Pollutant or Pollutant Property	Maximum for Any One Day	Maximum for Monthly Average
Metric Units - mg/kg of tungsten metal produced English Units - lbs/million lbs of tungsten metal produced		
Lead	0.672	0.312
Zinc	2.448	1.008
Ammonia (as N)	319.900	140.700
TSS	36.000	28.800
pH	Within the range of 7.0 to 10.0 at all times	

(n) Molybdenum Sulfide Precipitation Wet Air Pollution Control NSPS

Pollutant or Pollutant Property	Maximum for Any One Day	Maximum for Monthly Average
Metric Units - mg/kg of tungsten metal produced English Units - lbs/million lbs of tungsten metal produced		
Lead	0.000	0.000
Zinc	0.000	0.000
Ammonia (as N)	0.000	0.000
TSS	0.000	0.000
pH	Within the range of 7.0 to 10.0 at all times	

PSES are promulgated based on the performance achievable by the application of chemical precipitation, sedimentation, and multimedia filtration (lime, settle, and filter) technology, and in-process flow reduction control methods, along with preliminary treatment consisting of ammonia steam stripping for selected waste streams. The following pretreatment standards are promulgated for existing sources:

(a) Tungstic Acid Rinse PSES

Pollutant or Pollutant Property	Maximum for Any One Day	Maximum for Monthly Average
Metric Units - mg/kg of tungstic acid (as W) produced English Units - lbs/million lbs of tungstic acid (as W) produced		
Lead	11.490	5.333
Zinc	41.850	17.230
Ammonia (as N)	5,469.000	2,404.000

(b) Acid Leach Wet Air Pollution Control PSES

Pollutant or Pollutant Property	Maximum for Any One Day	Maximum for Monthly Average
Metric Units - mg/kg of tungstic acid (as W) produced English Units - lbs/million lbs of tungstic acid (as W) produced		
Lead	1.003	0.466
Zinc	3.653	1.504
Ammonia (as N)	477.400	209.900

(c) Alkali Leach Wash PSES

Pollutant or Pollutant Property	Maximum for Any One Day	Maximum for Monthly Average
Metric Units - mg/kg of sodium tungstate produced English Units - lbs/million lbs of sodium tungstate produced		
Lead	0.000	0.000
Zinc	0.000	0.000
Ammonia (as N)	0.000	0.000

(d) Alkali Leach Wash Condensate PSES

Pollutant or Pollutant Property	Maximum for Any One Day	Maximum for Monthly Average
Metric Units - mg/kg of sodium tungstate (as W) produced English Units - lbs/million lbs of sodium tungstate (as W) produced		
Lead	5.372	2.494
Zinc	19.570	8.057
Ammonia (as N)	2,557.000	1,124.000

(e) Ion-Exchange Raffinate (Commingled with Other Process or Nonprocess Water) PSES

Pollutant or Pollutant Property	Maximum for Any One Day	Maximum for Monthly Average
Metric Units - mg/kg of ammonium tungstate (as W) produced English Units - lbs/million lbs of ammonium tungstate (as W) produced		
Lead	24.780	11.500
Zinc	90.240	37.160
Ammonia (as N)	11,790.000	5,185.000

(f) Ion-Exchange Raffinate (Not Commingled with Other Process or Nonprocess Water)[1] PSES

Pollutant or Pollutant Property	Maximum for Any One Day	Maximum for Monthly Average
Metric Units - mg/kg of ammonium tungstate (as W) produced English Units - lbs/million lbs of ammonium tungstate (as W) produced		
Lead	24.780	11.500
Zinc	90.240	37.160
Ammonia (as N)	11,790.000	5,185.000

[1]The pretreatment standard for this pollutant does not apply if (a) the mother liquor feed to the ion exchange process or the raffinate from the ion exchange process contains sulfates at concentrations exceeding 1000 mg/l; (b) this mother liquor or raffinate is treated by ammonia steam stripping; and (c) such mother liquor or raffinate is not commingled with any other process or nonprocess waters prior to steam stripping for ammonia removal.

(g) Calcium Tungstate Precipitate Wash PSES

Pollutant or Pollutant Property	Maximum for Any One Day	Maximum for Monthly Average
Metric Units - mg/kg of calcium tungstate (as W) produced English Units - lbs/million lbs of calcium tungstate (as W) produced		
Lead	20.670	9.594
Zinc	75.280	31.000
Ammonia (as N)	9,838.000	4,325.000

(h) Crystallization and Drying of Ammonium Paratungstate PSES

Pollutant or Pollutant Property	Maximum for Any One Day	Maximum for Monthly Average
Metric Units - mg/kg of ammonium paratungstate (as W) produced English Units - lbs/million lbs of ammonium paratungstate (as W) produced		
Lead	0.000	0.000
Zinc	0.000	0.000
Ammonia (as N)	0.000	0.000

(i) Ammonium Paratungstate Conversion to Oxides Wet Air Pollution Control PSES

Pollutant or Pollutant Property	Maximum for Any One Day	Maximum for Monthly Average
Metric Units - mg/kg of tungstic oxide (as W) produced English Units - lbs/million lbs of tungstic oxide (as W) produced		
Lead	0.773	0.359
Zinc	2.817	1.160
Ammonia (as N)	368.200	161.900

(j) Ammonium Paratungstate Conversion to Oxides Water of Formation PSES

Pollutant or Pollutant Property	Maximum for Any One Day	Maximum for Monthly Average
Metric Units - mg/kg of tungstic oxide (as W) produced English Units - lbs/million lbs of tungstic oxide (as W) produced		
Lead	0.018	0.008
Zinc	0.064	0.026
Ammonia (as N)	8.398	3.692

(k) Reduction to Tungsten Wet Air Pollution Control PSES

Pollutant or Pollutant Property	Maximum for Any One Day	Maximum for Monthly Average
Metric Units - mg/kg of tungsten metal produced English Units - lbs/million lbs of tungsten metal produced		
Lead	0.862	0.400
Zinc	3.142	1.294
Ammonia (as N)	410.600	180.500

(l) Reduction to Tungsten Water of Formation PSES

Pollutant or Pollutant Property	Maximum for Any One Day	Maximum for Monthly Average
Metric Units - mg/kg of tungsten metal produced English Units - lbs/million lbs of tungsten metal produced		
Lead	0.137	0.064
Zinc	0.499	0.205
Ammonia (as N)	65.190	28.660

(m) Tungsten Powder Acid Leach and Wash PSES

Pollutant or Pollutant Property	Maximum for Any One Day	Maximum for Monthly Average
Metric Units - mg/kg of tungsten metal produced English Units - lbs/million lbs of tungsten metal produced		
Lead	0.672	0.312
Zinc	2.448	1.008
Ammonia (as N)	319.900	140.700

(n) Molybdenum Sulfide Precipitation Wet Air Pollution Control PSES

Pollutant or Pollutant Property	Maximum for Any One Day	Maximum for Monthly Average
Metric Units - mg/kg of tungsten metal produced English Units - lbs/million lbs of tungsten metal produced		
Lead	0.000	0.000
Zinc	0.000	0.000
Ammonia (as N)	0.000	0.000

PSNS are promulgated based on the performance achievable by the application of chemical precipitation, sedimentation, and multimedia filtration (lime, settle, and filter) technology, and in-process flow reduction control methods, along with preliminary treatment consisting of ammonia steam stripping for selected waste streams. The following pretreatment standard are promulgated for new sources:

(a) Tungstic Acid Rinse PSNS

Pollutant or Pollutant Property	Maximum for Any One Day	Maximum for Monthly Average
Metric Units - mg/kg of tungstic acid (as W) produced English Units - lbs/million lbs of tungstic acid (as W) produced		
Lead	11.490	5.333
Zinc	41.850	17.230
Ammonia (as N)	5,469.000	2,404.000

(b) Acid Leach Wet Air Pollution Control PSNS

Pollutant or Pollutant Property	Maximum for Any One Day	Maximum for Monthly Average
Metric Units - mg/kg of tungstic acid (as W) produced English Units - lbs/million lbs of tungstic acid (as W) produced		
Lead	1.003	0.466
Zinc	3.653	1.504
Ammonia (as N)	477.400	209.900

(c) Alkali Leach Wash PSNS

Pollutant or Pollutant Property	Maximum for Any One Day	Maximum for Monthly Average
Metric Units - mg/kg of sodium tungstate (as W) produced English Units - lbs/million lbs of sodium tungstate (as W) produced		
Lead	0.000	0.000
Zinc	0.000	0.000
Ammonia (as N)	0.000	0.000

(d) Alkali Leach Wash Condensate PSNS

Pollutant or Pollutant Property	Maximum for Any One Day	Maximum for Monthly Average
Metric Units - mg/kg of sodium tungstate (as W) produced English Units - lbs/million lbs of sodium tungstate (as W) produced		
Lead	5.372	2.494
Zinc	19.570	8.057
Ammonia (as N)	2,557.000	1,124.000

(e) Ion-Exchange Raffinate (Commingled with Other Process or Nonprocess Waters) PSNS

Pollutant or Pollutant Property	Maximum for Any One Day	Maximum for Monthly Average
Metric Units - mg/kg of ammonium tungstate (as W) produced English Units - lbs/million lbs of ammonium tungstate (as W) produced		
Lead	24.780	11.500
Zinc	90.240	37.160
Ammonia (as N)	11,790.000	5,185.000

(f) Ion-Exchange Raffinate (Not Commingled with Other Process or Nonprocess Waters) PSNS

Pollutant or Pollutant Property	Maximum for Any One Day	Maximum for Monthly Average
Metric Units - mg/kg of ammonium tungstate (as W) produced English Units - lbs/million lbs of ammonium tungstate (as W) produced		
Lead	24.780	11.500
Zinc	90.240	37.160
Ammonia (as N)	11,790.000	5,185.000

[1]The pretreatment standard for this pollutant does not apply if (a) the mother liquor feed to the ion exchange process or the raffinate from the ion exchange process contains sulfates at concentrations exceeding 1000 mg/l; (b) this mother liquor or raffinate is treated by ammonia steam stripping; and (c) such mother liquor or raffinate is not commingled with any other process or nonprocess waters prior to steam stripping for ammonia removal.

(g) Calcium Tungstate Precipitate Wash PSNS

Pollutant or Pollutant Property	Maximum for Any One Day	Maximum for Monthly Average
Metric Units - mg/kg of calcium tungstate (as W) produced English Units - lbs/million lbs of calcium tungstate (as W) produced		
Lead	20.670	9.594
Zinc	75.280	31.000
Ammonia (as N)	9,838.000	4,325.000

(h) Crystallization and Drying of Ammonium Paratungstate PSNS

Pollutant or Pollutant Property	Maximum for Any One Day	Maximum for Monthly Average
Metric Units - mg/kg of ammonium paratungstate (as W) produced English Units - lbs/million lbs of ammonium paratungstate (as W) produced		
Lead	0.000	0.000
Zinc	0.000	0.000
Ammonia (as N)	0.000	0.000

(i) Ammonium Paratungstate Conversion to Oxides Wet Air Pollution Control PSNS

Pollutant or Pollutant Property	Maximum for Any One Day	Maximum for Monthly Average
Metric Units - mg/kg of tungstic oxide (as W) produced English Units - lbs/million lbs of tungstic oxide (as W) produced		
Lead	0.773	0.359
Zinc	2.817	1.160
Ammonia (as N)	368.200	161.900

(j) Ammonium Paratungstate Conversion to Oxides Water of Formation PSNS

Pollutant or Pollutant Property	Maximum for Any One Day	Maximum for Monthly Average
Metric Units - mg/kg of tungstic oxide (as W) produced English Units - lbs/million lbs of tungstic oxide (as W) produced		
Lead	0.018	0.008
Zinc	0.064	0.026
Ammonia (as N)	8.398	3.692

(k) Reduction to Tungsten Wet Air Pollution Control PSNS

Pollutant or Pollutant Property	Maximum for Any One Day	Maximum for Monthly Average
Metric Units - mg/kg of tungsten metal produced English Units - lbs/million lbs of tungsten metal produced		
Lead	0.862	0.400
Zinc	3.142	1.294
Ammonia (as N)	410.600	180.500

(l) Reduction to Tungsten Water of Formation PSNS

Pollutant or Pollutant Property	Maximum for Any One Day	Maximum for Monthly Average
Metric Units - mg/kg of tungsten metal produced English Units - lbs/million lbs of tungsten metal produced		
Lead	0.137	0.064
Zinc	0.499	0.205
Ammonia (as N)	65.190	28.660

(m) Tungsten Powder Acid Leach and Wash PSNS

Pollutant or Pollutant Property	Maximum for Any One Day	Maximum for Monthly Average
Metric Units - mg/kg of tungsten metal produced English Units - lbs/million lbs of tungsten metal produced		
Lead	0.672	0.312
Zinc	2.448	1.008
Ammonia (as N)	319.900	140.700

(n) Molybdenum Sulfide Precipitation Wet Air Pollution Control PSNS

Pollutant or Pollutant Property	Maximum for Any One Day	Maximum for Monthly Average
Metric Units - mg/kg of tungsten metal produced English Units - lbs/million lbs of tungsten metal produced		
Lead	0.000	0.000
Zinc	0.000	0.000
Ammonia (as N)	0.000	0.000

THIS PAGE INTENTIONALLY LEFT BLANK

SECTION III

SUBCATEGORY PROFILE

This section of the primary tungsten supplement describes the raw materials and processes used in producing primary tungsten, and presents a profile of the primary tungsten plants identified in this study.

In the early 1780's, tungstic acid was first isolated from scheelite and wolframite and, shortly thereafter, tungsten was obtained by both carbon and hydrogen reduction of wolframite ($(Fe,Mn)WO_4$). Hydrogen reduction is still a key step in the production of tungsten powder from which other finished products are derived. From the mid-nineteenth century through the first third of this century, tungsten was used chiefly as an alloying agent in steel. During the last 30 years, however, tungsten uses have increased to include production of carbides and alloys. The 1974 production use breakdown was 68 percent carbide, 15 percent pure metal, and 15 percent alloy. Another 2 percent was used to manufacture various metal compounds.

DESCRIPTION OF PRIMARY TUNGSTEN PRODUCTION

The production of tungsten metal can be divided into three distinct stages - leaching of ore concentrates, purification to ammonium paratungstate (APT), and the reduction of APT to metal. The actual processes used in each stage vary with the type and purity of the raw material used. The primary tungsten production process is presented schematically in Figure III-1 (Page 2973) and described below.

RAW MATERIALS

The principal domestic ores used to produce ammonium paratungstate and tungsten metal powder are ferberite ($FeWO_4$), wolframite ($(Fe,Mn)WO_4$), and scheelite ($CaWO_4$). These ores are mined principally in California and Colorado.

LEACHING OF ORE CONCENTRATES

Scheelite ores of high quality (i.e., low concentrations of molybdenum and complexing elements such as phosphorus, arsenic, and silicon) are usually leached with hot hydrochloric acid (HCl). An insoluble tungstic acid intermediate (H_2WO_4) is formed. Subsequently, the tungstic acid is filtered and washed. The acidic tungstic acid rinse water and HCl fume control scrubber water are wastewater sources.

Lower quality scheelite ores and some wolframite ores, $(Fe,Mn)WO_4$ may be digested using a soda-autoclave leach process that uses high temperature steam and soda ash in quantities greater than stoichiometric amounts to produce a sodium tungstate intermediate

(Na_2WO_4). The sodium tungstate solution is usually filtered to remove calcium carbonate ($CaCO_3$) and silica solids which are the contaminants in largest concentrations in the ore. If molybdenum impurities are present, the sodium tungstate solution is reacted with sodium hydrosulfide (NaHS) to precipitate molybdenum trisulfide (MoS_3). The molybdenum trisulfide solids are removed with a filter and the sodium tungstate solution is further processed. A wet scrubber is used on the precipitation step to control hydrogen sulfide (H_2S) gaseous emissions. The spent scrubber liquor is a possible source of wastewater.

Higher quality wolframite ores are processed using an alkaline leaching method. This method, which also produces a sodium tungstate intermediate, involves digestion with a strong caustic solution, usually sodium hydroxide (NaOH). The sodium tungstate solution is filtered to remove insoluble impurities, which are washed and discarded. Sodium tungstate is crystallized from the filtrate and the remaining caustic solution and wash water are recycled, evaporated, or discharged. The alkali leach wash condensate may also be discharged. Alternately, the filtrate is sent to the solvent extraction process for tungsten recovery (discussed below).

PURIFICATION TO AMMONIUM PARATUNGSTATE

Purification of the tungstic acid intermediate (H_2WO_4) is more direct than that for sodium tungstate. After filtering and washing to remove soluble calcium chloride ($CaCl_2$), the tungstic acid is dissolved in ammonium hydroxide (NH_4OH) to form ammonium tungstate ($(NH_4)_6W_7O_{24} \cdot 6H_2O$) in solution. Ammonium paratungstate ($5(NH_4)_2O \cdot 12WO_3 \cdot 5H_2O$) is obtained by crystallization from the ammonium tungstate solution. Ammonia evolved during crystallization is usually recovered and recycled. Spent mother liquor from the crystallization is either recycled or discarded. The APT is filtered and dried to drive off residual mother liquor. Baghouses are used to capture particulate APT from drying furnace off-gases.

The purification of the sodium tungstate intermediate can follow two basic routes. The classical approach is to precipitate calcium tungstate (synthetic scheelite) from the sodium tungstate solution by adding calcium chloride. The solution is filtered to mostly sodium chloride, is discharged. The calcium tungstate ($CaWO_4$) can then be digested with hydrochloric acid (HCl). From this point, the purification is the same as described above for the purification of tungstic acid intermediate - dissolution with ammonia followed by crystallization.

Synthetic scheelite is also prepared from recycled process solutions and cleanup water, such as spent crystallization liquor and floor wash, that may contain tungsten values. The calcium tungstate is precipitated with calcium chloride and can be processed as described above. Alternatively, the calcium tungstate may be sent through solvent extraction instead of digested with hydrochloric acid.

The second approach for purifying the sodium tungstate intermediate is a newer solvent extraction method. The sodium tungstate solution is converted to ammonia tungstate solution in a liquid ion-exchange system. The sodium tungstate solution is contacted countercurrently with an organic solvent, which removes the tungstate ions from solution. The ion-exchange raffinate, or waste solution, is a process wastewater source. The organic solvent is washed with water to remove impurities and recycled. Wash water is discharged with the raffinate. The ammonium tungstate solution is fed to a crystallizer where APT crystals are formed. The APT crystals are filtered and dried as described above.

APT CONVERSION TO OXIDE

Dried APT is calcined in rotary furnaces heated indirectly to drive off ammonia and produce tungsten oxides (WO_x). The type of oxide produced is a function of furnace atmosphere (N_2, H_2, etc.) and temperature. Blue tungsten oxide (W_2O_5), brown tungsten oxide (WO_2), or yellow tungstic oxide (WO_3) are possible products. The calciners are often equipped with wet scrubbers whose wastewaters contain treatable concentrations of ammonia. Water of formation may also be collected and discarded.

REDUCTION TO METAL

Tungsten oxides are reduced to metal powder in high temperature (>700°C) furnaces. The reducing agent is typically hydrogen (H_2). Powders of various particle sizes are produced by varying furnace reaction time, temperature gradient, hydrogen flow, and layer thickness. Water of formation and scrubber wastewater may be generated in this step.

Tungsten powder used in high-purity application is leached with acids (e.g., hydrochloric or hydrofluoric), rinsed with water and dried. The spent acid and rinse water are discharged to wastewater treatment.

TUNGSTEN CARBIDE PRODUCTION

Tungsten carbide (WC) is formed by reducing APT or tungsten oxides in the presence of carbon. Tungsten ores may also be reduced and carburized in a single reaction. In the latter process, impurities are leached with acid from the furnace product to yield tungsten carbide crystals. Acids used are hydrochloric, sulfuric, and hydrofluoric. Wastewater generated consists of spent acid, rinse water, and spent liquor from a scrubber on the leaching step.

PROCESS WASTEWATER SOURCES

Although a variety of processes are involved in primary tungsten production, the process wastewater sources can are subdivided as

follows:

1. Tungstic acid rinses,
2. Acid leaching wet air pollution control,
3. Alkali leach wash,
4. Alkali leach wash condensate
5. Molybdenum sulfide precipitation wet air pollution control,
6. Ion-exchange raffinate, (commingled with other process and nonprocess streams)
7. Ion-exchange raffinate (not commingled with other process and nonprocess streams)
8. Calcium tungstate precipitate wash,
9. Crystallization and drying of ammonium paratungstate,
10. Ammonium paratungstate conversion to oxides wet air pollution control,
11. Ammonia paratungstate conversion to oxides water of formation,
12. Reduction to tungsten wet air pollution control,
13. Reduction to tungsten water of formation, and
14. Tungsten powder acid leach and wash.

OTHER WASTEWATER SOURCES

There are other wastewater streams associated with the primary tungsten subcategory. These streams may include stormwater runoff, Maintenance and cleanup water, tungsten carbide acid leach and rinse, tungsten carbide acid leach wet air pollution control, and acid rinse of alkali intermediates. These wastewater streams are not considered as a part of this rulemaking. EPA believes that the flows and pollutant loadings associated with these waste streams are insignificant relative to the waste streams selected, and are best handled by the appropriate permit authority on a case-by-case basis under authority of Section 402 of the CWA.

One plant in the subcategory reported the tungsten carbide acid leach and associated scrubber waste streams. This plant is a zero discharger through evaporation in ponds. The Agency believes these wastewater streams are unique and do not warrant a national effluent limitation.

One plant generates a tungstic acid rinse water from an acid leaching step. This stream was considered unique because an alkali leaching product, not ore concentrates, was leached, and the tungstic acid produced was more thoroughly rinsed and dried in preparation for sale as a by-product.

AGE, PRODUCTION, AND PROCESS PROFILE

Figure III-2 (Page 2974) shows the location of the 17 primary tungsten plants operating in the United States. Thirteen of the 17 plants are located in states east of the Mississippi River around the Great Lakes while one is located in California, one in Iowa, and two in Nevada. All but the plants in California and

Nevada are in net precipitation areas.

Table III-1 (Page 2973) shows the relative age and discharge status of the tungsten plants and illustrates that many plants were built around the time of World War II. The average plant age is between 20 and 30 years. From Table III-2 (Page 2969), it can be seen that five plants produce over 1,000 kkg/yr of metal, three produce between 250 and 1,000 kkg/yr, and nine others produce less than 250 kkg/yr. Mean production is about 480 kkg/yr.

Table III-3 (page 2969) shows a summary of the existing treatment level of plants in the primary tungsten subcategory. Table III-4 (Page 2970) provides a summary of the number of plants generating wastewater for the waste streams associated with various processes and the number of plants with the process. Table III-5 (page 2971) relates the production processes used in the subcategory with the number of plants using the process. Finally,Table III-6 (page 2972) displays the treatment processes used by the various types of dischargers in the primary tungsten subcategory.

Table III-1

INITIAL OPERATING YEAR (RANGE) SUMMARY OF PLANTS
IN THE PRIMARY TUNGSTEN SUBCATEGORY BY DISCHARGE TYPE

	Initial Operating Year (Range) (Plant Age in Years)								
Type of Plant	1983-1974 (0-10)	1973-1969 (11-15)	1968-1959 (16-25)	1958-1949 (26-35)	1948-1939 (36-45)	1938-1929 (46-55)	1928-1919 (56-65)	Before 1919 (65+)	Total
Direct	1	0	0	1	2	0	0	0	4
Indirect	1	0	0	1	2	0	1	1	6
Zero	3	2	1	0	1	0	0	0	7
Total	5	2	1	2	4	0	1	1	17

TABLE III-2

PRODUCTION RANGES FOR THE
PRIMARY TUNGSTEN INDUSTRY

Production Ranges for 1976 tons/year)	Number of Plants
0 - 1,000	4
1,001 - 5,000	3
5,000 +	2
Insufficient Data	1

TABLE III-3

TREATMENT LEVEL SUMMARY FOR
THE PRIMARY TUNGSTEN INDUSTRY

Discharge Type	No Treatment	Level A*	Level B	Total
Direct	0	2	1	3
Indirect	0	2	1	3
Zero		2	0	3
Totals	1	6	2	9

*The levels of treatment have been defined as:

Level A - Physical separation of solids, cooling or neutralization only.

Level B - Removal of dissolved metals by chemical precipitation followed by coagulation/ flocculation, settling and/or filtration.

TABLE III-4

SUMMARY OF SUBCATEGORY PROCESSES AND ASSOCIATED WASTEWATER STREAMS

Wastewater Stream	Number of plants with Process	Number of Plants Generating Wastewater
Tungstic Acid Rinse	2	2
Acid Leaching Air Pollution Control	2	2
Alkali Leach Wash	4	4
Alkali Leach Wash Condensate	1	1
Molybdenum Sulfide Precipitation Air Pollution COntrol	2	2
Ion-Exchange Raffinate (Commingled and Not Commingled With Other Process or Nonprocess Streams)	4	4
Calcium Tungstate Precipitate Wash	6	6
Crystallization and Drying of Ammonium Paratungstate	5	5
Ammonium Paratungstate Conversion to Oxides Air Pollution COntrol	2	2
Ammonium Paratungstate Conversion to Oxides Water of Formation	2	2
Reduction to Tungsten Air Pollution Control	7	7
Reduction to Tungsten Water of Formation	6	6
Tungsten Powder Acid Leach and Wash	2	2

NOTE: Through reuse or evaporation practices, a plant may generate a wastewater from a particular process but may not discharge it.

TABLE III-5

PRODUCTION PROCESSES UTILIZED BY THE PRIMARY TUNGSTEN SUBCATEGORY (10 PLANTS)

Production Process	Number of Plants With Process
Fusion or Concentrate	2
Leaching	4
Precipitation	4
Filtration	4
APT Drying	6
Reduction	7*

*Identification of the use of a reduction process, at one plant which produces metal from APT, was indeterminable due to insufficient data.

TABLE III-6

TREATMENT PROCESSES UTILIZED BY THE PRIMARY TUNGSTEN SUBCATEGORY (10 PLANTS)

Treatment Processes	Direct Dischargers	Indirect Dischargers	Zero Dischargers	Total Subcatego
Number of Plants	3	3	3	9*
Ammonia Stripping	2	1	1	4
Lime	3	1	0	4
Polymer	1	1	0	2
Cooling	1	0	1	2
Evaporation	0	1	1	2
Settling	3	3	2	8
Filtration	3	1	2	6
No Treatment	0	0	1	1

*Method of wastewater discharge was indeterminable for one plant due to insufficient data.

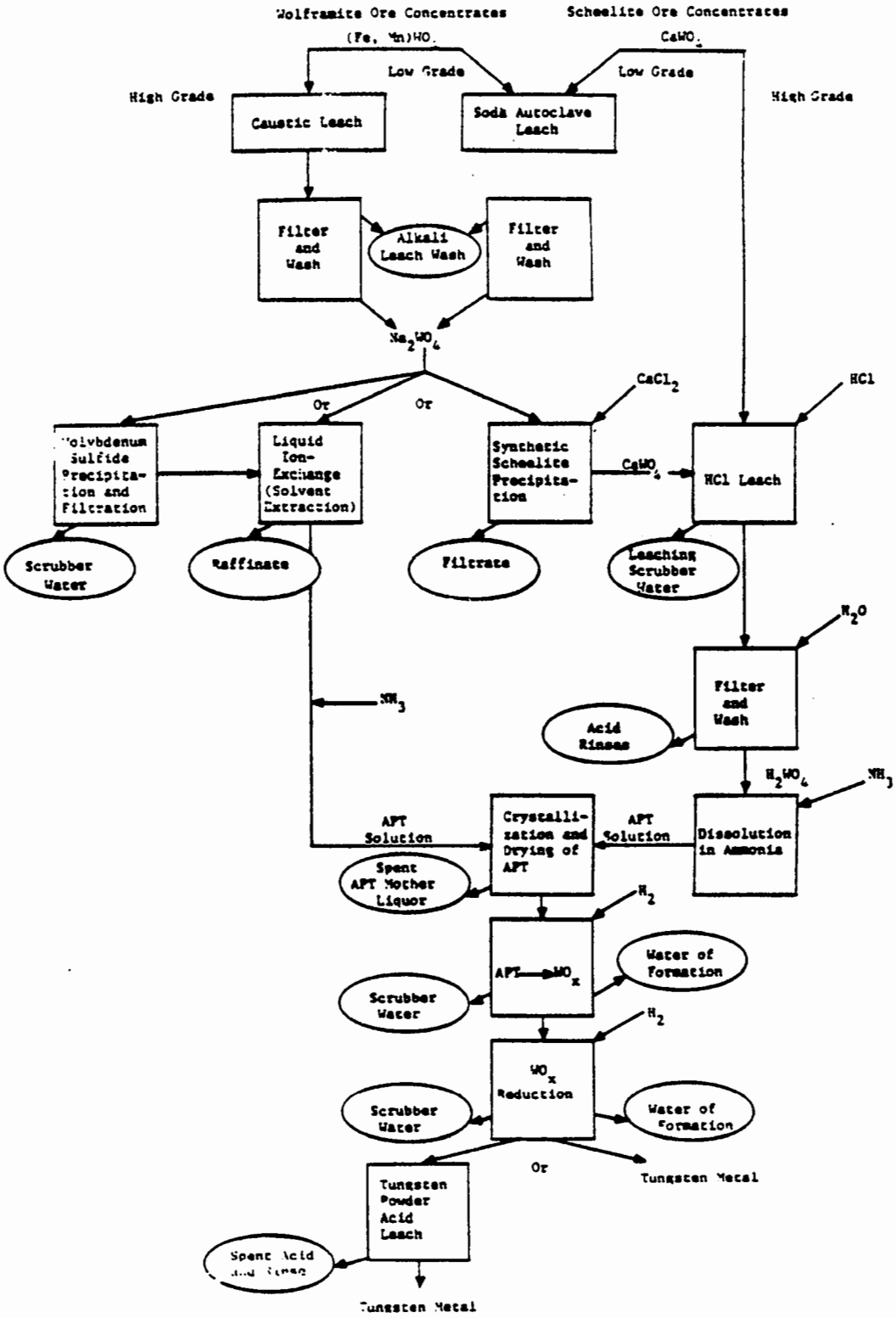

FIGURE III-1
PRIMARY TUNGSTEN PRODUCTION PROCESSES

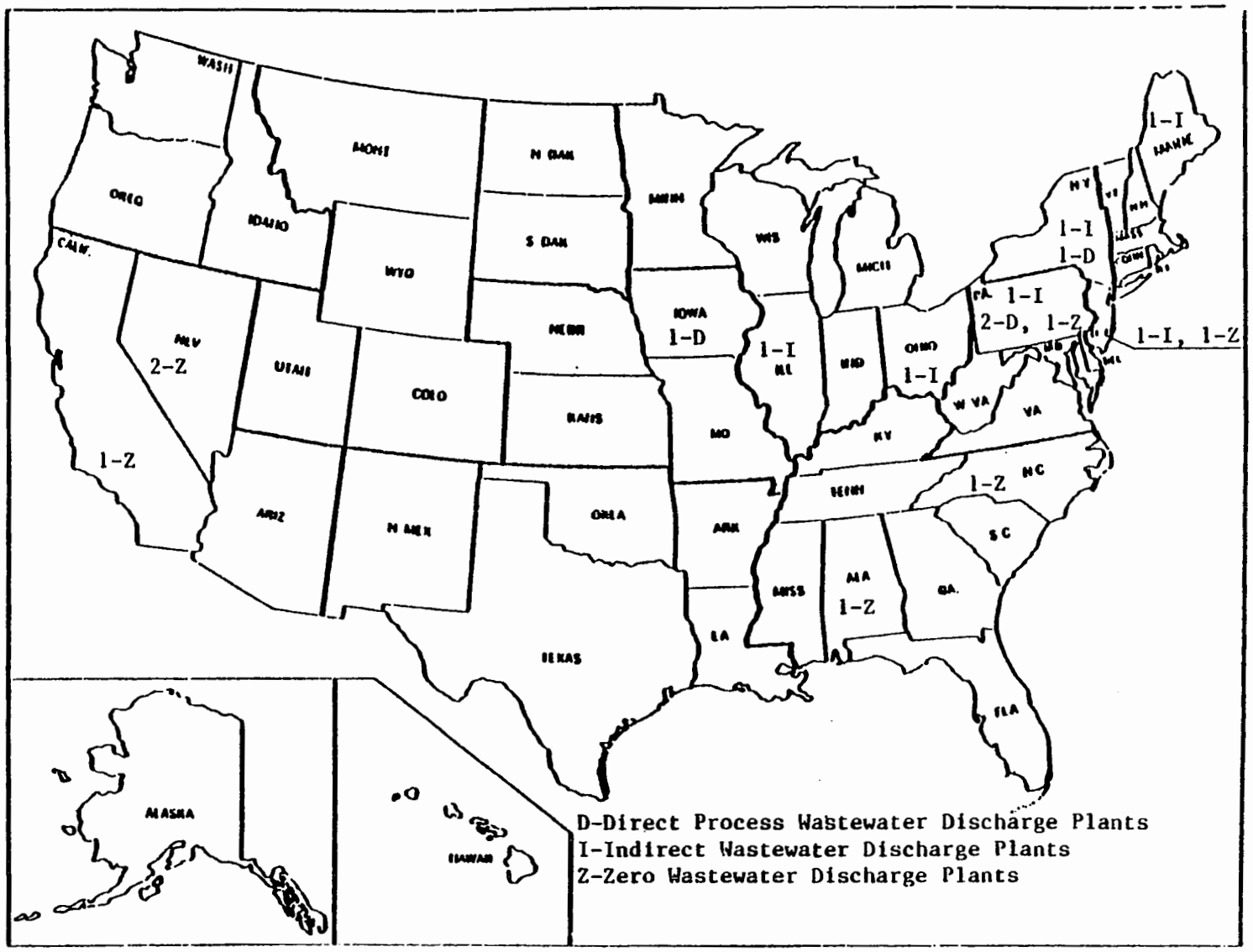

Figure III-2

GEOGRAPHIC LOCATION OF PRIMARY TUNGSTEN PLANTS

SECTION IV

SUBCATEGORIZATION

This section summarizes the factors considered during the designation of the primary tungsten subcategory and its related subdivisions. Production normalizing parameters for each subdivision are also discussed.

FACTORS CONSIDERED IN SUBDIVIDING THE PRIMARY TUNGSTEN SUBCATEGORY

The factors listed for general subcategorization were each evaluated when considering subdivision of the primary tungsten subcategory. In the discussion that follows, the factors will be described as they pertain to this particular subcategory.

The rationale for considering segmentation of the primary tungsten subcategory is based primarily on differences in the production processes and raw materials used. Within this subcategory, a number of different operations are performed, which may or may not have a water use or discharge, and which may require the establishment of separate effluent limitations. While primary tungsten is considered a single subcategory, a more thorough examination of the production processes has illustrated the need for limitations and standards based on a specific set of waste streams. Limitations are based on specific flow allowances for the following subdivisions or building blocks:

1. Tungstic acid rinse,
2. Acid leach wet air pollution control,
3. Alkali leach wash,
4. Alkali leach wash condensate
5. Molybdenum sulfide precipitation wet air pollution control,
6. Ion-exchange raffinate, (commingled with other process and nonprocess streams)
7. Ion-exchange raffinate (not commingled with other process and nonprocess streams)
8. Calcium tungstate precipitate wash,
9. Crystallization and drying of ammonium paratungstate,
10. Ammonium paratungstate conversion to oxides wet air pollution control,
11. Ammonium paratungstate conversion to oxides water of formation,
12. Reduction to tungsten wet air pollution control,
13. Reduction to tungsten water of formation, and
14. Tungsten powder acid leach and wash.

These subdivisions follow directly from differences within the three distinct production stages of primary tungsten: leaching of ore concentrates, purification to APT, and reduction to metal. Generally, a specific plant will either process ore to APT,

reduce APT to metal, or utilize all three stages of production and process ore concentrate all the way to tungsten metal.

Leaching of ore concentrates gives rise to the first four building blocks. The acidic rinses of insoluble tungstic acid are a major source of wastewater directly attributable to leaching with HCl. Wastewaters from scrubbers which are used to control HCl fumes may also be significant sources of pollutants. If the alkali leaching process is used, the decantation of sodium tungstate may produce waste streams.

Differences in methods of purifying the two intermediates--sodium tungstate and tungstic acid--into APT resulted in the fifth, sixth, seventh, eight and ninth building blocks. If sodium tungstate is the intermediate from leaching, calcium tungstate (synthetic scheelite) may be precipitated by adding calcium chloride, $CaCl_2$. The filtrate from this process is a wastewater which contains sodium chloride, NaCl. Molybdenum sulfide impurities also may be precipitated from sodium tungstate solution, resulting in wastewater from a scrubber on this step. If the liquid ion-exchange route is chosen to convert sodium tungstate to APT, a raffinate stream is a potential discharge.

Plants which produce APT crystallize it from solution. Consequently the spent mother liquor may create another discharge situation. Some plants use a combination of recycle or evaporation if it is feasible for this process. An ammonia recovery system is commonly economically viable for this waste stream.

The final production stage, reduction of APT to metal, also has three subdivisions associated with it. The decomposition of APT to tungsten oxides drives off ammonia which is usually contained with some type of wet scrubbing system. "Water of formation" may also be generated. This water may pass in a vapor phase through the scrubber system or may be condensed separately; consequently, a separate subdivision has been included to account for this potential discharge. The reduction of oxides to tungsten metal in reduction furnaces will also require a wet scrubber to clean the reduction furnace off-gases. The reduction of WO_3 to tungsten metal in a hydrogen atmosphere will also produce a "water of formation." The final subdivision is for spent acid and wash for leaching of tungsten powder.

OTHER FACTORS

The other factors considered in this evaluation were shown to be inappropriate bases for subdivision. Air pollution control methods, treatment costs, and total energy requirements are functions of the selected segmentation factors--metal product, raw materials, and production processes. Therefore, they are not independent factors and do not affect the segmentation which has been applied.

PRODUCTION NORMALIZING PARAMETERS

As discussed previously, the effluent limitations and standards developed in this document establish mass limitations on the discharge of specific pollutant parameters. To allow these regulations to be applied to plants with various production capacities, the mass of pollutant discharged must be related to a unit of production. This factor is known as the production normalizing parameter (PNP).

In general, for each production process which has a wastewater associated with it, the actual mass of the element tungsten in the tungsten product or intermediate produced will be used as the PNP. Using the elemental tungsten produced or processed as a production normalizing parameter rather than a chemical compound makes the production basis clear and unanbiguous. Thus, the PNPs for the 14 subdivisions are as follows:

1.	Tungstic acid rinse	kkg of tungstic acid (as W) produced
2.	Acid leach wet air pollution control	kkg of tungstic acid (as W) produced
3.	Alkali wash leach	kkg of sodium tungstate produced
4.	Alkali leach wash condensate	kkg of sodium tungstate (as W) produced
5.	Molybdenum sulfide precipitation wet air pollution control	kkg of tungsten metal produced
6.	Ion-exchange raffinate (commingled with other process and nonprocess streams)	kkg of ammonium tungstate (as W) produced
7.	Ion-exchange raffinate (not commingled with other process and nonprocess streams)	kkg of ammonium tungstate (as W) produced
8.	Calcium tungstate precipitate wash	kkg of calcium tungstate (as W) produced
9.	Crystallization and drying of ammonium paratungstate	kkg of ammonium paratungstate (as W) produced
10.	Ammonium paratungstate conversion to oxides wet air pollution control	kkg of tungstic oxide (as W) produced
11.	Ammonium paratungstate conversion to oxides water of formation	kkg of tungstic oxide (as W) produced
12.	Reduction to tungsten wet air pollution control	kkg of tungsten produced
13.	Reduction to tungsten water of formation	kkg of tungsten produced
14.	Tungsten powder leach and wash	kkg of tungsten produced

Other PNPs were considered. The use of production capacity instead of actual production was eliminated from consideration because the mass of the pollutant produced is more a function of true production than of installed capacity. The use of some common intermediate (i.e., ammonium paratungstate or tungsten metal) as a basis for PNPs for all processes was rejected since not all plants follow the same production path to get to the specific end-product. Additionally, some plants divert part of their intermediate products (e.g., sodium tungstate and tungsten acid) and sell them as by-products instead of processing all input raw materials to one final product. If an "end-product" were chosen as the PNP, plants that had these upstream diversions would be allowed to discharge more per mass of product than their competitors who did not.

SECTION V

WATER USE AND WASTEWATER CHARACTERISTICS

This section describes the characteristics of the wastewaters associated with the primary tungsten subcategory. Water use and discharge rates are explained and then summarized in tables at the end of this section. Data used to characterize the wastewaters are presented. Finally, the specific source, water use and discharge flows, and wastewater characteristics for each separate wastewater source are discussed.

Two principal data sources were used in the development of effluent limitations and standards for this subcategory: data collection portfolios (dcp) and field sampling results. Data collection portfolios contain information regarding wastewater flows and production levels.

In order to quantify the pollutant discharge from primary tungsten plants, a field sampling program was conducted. A complete list of the pollutants considered and a summary of the techniques used in sampling and laboratory analyses are included in Section V of Vol. I. Wastewater samples were collected in two phases: screening and verification. The first phase, screen sampling, was to identify which toxic pollutants were present in the wastewaters from production of the various metals. Screening samples were analyzed for 125 of the 126 toxic pollutants and other pollutants deemed appropriate. Because the analytical standard for TCDD was judged to be too hazardous to be made generally available, samples were never analyzed for this pollutant. There is no reason to expect that TCDD would be present in nonferrous metals manufacturing wastewater. A total of six plants were selected for sampling in the primary tungsten subcategory; one for screening, five for verification. In general, the samples were analyzed for three classes of pollutants: toxic organic pollutants, toxic metal pollutants, and criteria pollutants (which includes both conventional and nonconventional pollutants).

Two of these verification sampling efforts were conducted between proposal and promulgation because EPA believed additional process and wastewater data were needed to correctly characterize the primary tungsten subcategory.

As described in Section IV of this supplement, the primary tungsten subcategory has been divided into 14 subdivisions or wastewater sources, so that the proposed regulation contains mass discharge limitations and standards for 14 unit processes discharging process wastewater. Differences in the wastewater characteristics associated with these subdivisions are to be expected. For this reason, wastewater streams corresponding to each subdivision are addressed separately in the discussions that follow. These wastewater sources are:

1. Tungstic acid rinse water,
2. Acid leach wet air pollution control,
3. Alkali leach wash,
4. Alkali leach wash condensate
5. Molybdenum sulfide precipitation wet air pollution control,
6. Ion-exchange raffinate, (commingled with other process and nonprocess streams)
7. Ion-exchange raffinate (not commingled with other process and nonprocess streams)
8. Calcium tungstate precipitate wash,
9. Crystallization and drying of ammonium paratungstate,
10. Ammonium paratungstate conversion to oxides wet air pollution control,
11. Ammonium paratungstate conversion to oxides water of formation,
12. Reduction to tungsten wet air pollution control,
13. Reduction to tungsten water of formation, and
14. Tungsten powder acid leach and wash.

WASTEWATER FLOW RATES

Data supplied by dcp responses were evaluated, and two flow-to-production ratios, water use and wastewater discharge flow, were calculated for each stream. The two ratios are differentiated by the flow value used in calculation. Water use is defined as the volume of water or other fluid required for a given process per mass of product and is therefore based on the sum of recycle and make-up flows to a given process. Wastewater flow discharged after pretreatment or recycle (if these are present) is used in calculating the production normalized flow--the volume of wastewater discharged from a given process to further treatment, disposal, or discharge per mass of tungsten produced. Differences between the water use and wastewater flows associated with a given stream result from recycle, evaporation, and carry-over on the product. The production values used in calculation correspond to the production normalizing parameter, PNP, assigned to each stream, as outlined in Section IV. As an example, acid leaching scrubber water flow is related to the production of the tungstic acid intermediate. As such, the discharge rate is expressed in liters of scrubber water per metric ton of tungsten in the tungstic acid produced (gallons of scrubber water per ton of tungsten in the tungstic acid).

The production normalized discharge flows were compiled and statistically analyzed by stream type. These production normalized water use and discharge flows are presented by building block in Tables V-1 through V-11 (page 2988 - 2995). Where appropriate, an attempt was made to identify factors that could account for variations in water use and discharge rates. These variations are discussed later in this section by subdivision. A similar analysis of factors affecting the wastewater flows is presented in Sections X, XI, and XII where

representative BAT, BPT, and pretreatment flows are selected for use in calculating the effluent limitations. The water use and discharge rates shown do not include nonprocess wastewater, such as rainfall runoff and noncontact cooling water.

After proposal, EPA identified nine primary tungsten plants that were previously not included in the subcategory data base. Wastewater flow rates and production data were solicited from these plants through dcp. Some data from plants already in the Agency's data base were updated and revised because of comments received concerning the proposed regulation. This information was collected by telephone contacts. The new data were used to revise production normalized flow rates and recalculate regulatory flow allowances where appropriate (see Section IX).

WASTEWATER CHARACTERISTICS DATA

Data used to characterize the various wastewaters associated with primary tungsten production come from two sources--data collection portfolios and analytical data from field sampling trips.

DATA COLLECTION PORTFOLIOS

In the data collection portfolios, the tungsten plants that discharge wastewater were asked to specify the presence or absence of toxic pollutants in their wastewater. In all cases, the plants indicated that the toxic organic pollutants were believed to be absent. However, nearly all of the plants stated that they either knew the metals to be present or they believed the metals to be absent. The responses for the metals are summarized below: (Two plants which produce tungsten metal have been omitted due to lack of data.)

Pollutant	Known Present	Believed Present	Believed Absent	Known Absent
Antimony	1	1	4	1
Arsenic	3	0	3	1
Asbestos	0	0	6	1
Beryllium	0	0	6	1
Cadmium	2	0	4	1
Chromium	3	1	2	1
Copper	4	1	2	0
Cyanide	1	0	5	1
Lead	3	0	3	1
Mercury	2	1	3	1
Nickel	1	2	3	1
Selenium	0	0	6	1
Silver	3	1	3	0
Thallium	0	0	7	0
Zinc	4	1	2	0

FIELD SAMPLING DATA

In order to quantify the concentrations of pollutants present in wastewater from primary tungsten plants, wastewater samples were collected at six plants, which represents one-third of the primary tungsten plants in the United States. Diagrams indicating the sampling sites and contributing production processes are shown in Figures V-1 through V-6 (pages 3038 - 3043).

Raw wastewater data are summarized in Tables V-12 through V-16 (pages 2996 - 3017). Analytical results for tungstic acid rinse water, ion-exchange raffinate, calcium tungstate precipitate wash, oxides reduction furnace scrubber water and reduction to metal furnace scrubber water, and reduction to metal water of formation are given in Tables V-12, V-13, V-14, V-15, and V-16, respectively. Table V-17 presents data on tungstic acid rinse water after lime and settle treatment. Tables V-18 and V-19 present treatment plant samples for plant C and E, respectively. Note that the stream numbers listed in the tables correspond to those given in individual plant sampling site diagrams, Figures V-1 through V-6. Where no data are listed for a specific day of sampling, the wastewater samples for the stream were not collected. If the analyses did not detect a pollutant in a waste stream, the pollutant was omitted from the table.

The data tables include some samples measured at concentrations considered not quantifiable. The base-neutral extractable, acid extractable, and volatile organics generally are considered not quantifiable at concentrations equal to or less than 0.010 mg/l. Below this concentration, organic analytical results are not quantitatively accurate; however, the analyses are useful to indicate the presence of a particular pollutant. The pesticide fraction is considered not quantifiable at concentrations equal to or less than 0.005 mg/l. Nonquantifiable results are designated in the tables with an asterisk (double asterisk for pesticides).

These detection limits shown on the data tables are not the same in all cases as the published detection limits for these pollutants by the same analytical methods. The detection limits used were reported with the analytical data and hence are the appropriate limits to apply to the data. Detection limit variation can occur as a result of a number of laboratory-specific, equipment-specific, and daily operator-specific factors. These factors can include day-to-day differences in machine calibration, variation in stock solutions, and variation in operators.

The statistical analysis of data includes some samples measured at concentrations considered not quantifiable. Data reported as an asterisk are considered as detected but below quantifiable concentrations, and a value of zero is used for averaging. Toxic organic, nonconventional, and conventional pollutant data reported with a "less than" sign are considered as detected, but not further quantifiable. A value of zero is also used for averaging. If a pollutant is reported as not detected, it is excluded in calculating the average. Finally, toxic metal values reported as less than a certain value were considered as not detected, and a value of zero is used in the calculation of the average. For example, three samples reported as ND, *, and 0.021 mg/l have an average value of 0.010 mg/l.

Appropriate tubing or background blank and source water concentrations are presented with the summaries of the sampling data. The method by which each sample was collected is indicated by number, as follows:

1 one-time grab
2 24-hour manual composite
3 24-hour automatic composite
4 48-hour manual composite
5 48-hour automatic composite
6 72-hour manual composite
7 72-hour automatic composite

WASTEWATER CHARACTERISTICS AND FLOWS BY SUBDIVISION

Since primary tungsten production involves 14 principal sources of wastewater and each has potentially different characteristics and flows, the wastewater characteristics and discharge rates corresponding to each subdivision will be described separately. A brief description of why the associated production processes generate a wastewater and explanations for variations of water use within each subdivision will also be discussed.

TUNGSTIC ACID RINSE WATER

Both plants that leach scheelite ores or calcium tungstate (synthetic scheelite) with hydrochloric acid to produce tungstic acid (H_2WO_4) also use water to rinse the insoluble H_2WO_4. The spent rinse water is discharged. The production normalized water use and discharge rates for tungsten acid rinses are given in Table V-1 (page 2988) in liters per metric ton of tungstic acid produced.

Table V-12 (page 2996) summarizes the field sampling data for spent tungsten acid rinse water from two plants. From this data, it can be seen that tungsten acid rinses can be characterized by acidic pH, treatable concentrations of many metals including lead and zinc, and treatable concentrations of suspended solids.

ACID LEACH WET AIR POLLUTION CONTROL

Plants that acid leach use wet scrubbing systems for the control of HCl fumes. One plant reuses this water as tungstic acid rinse water and the other discharges all of it. Table V-2 (page 2988) presents the production normalized water use and discharge flows for acid leach scrubber water in liters per metric ton of tungstic acid produced.

The Agency did not specifically sample this wastestream, but the stream's major characteristics should be very similar to the raw wastewater data from tungstic acid rinse water, Table V-10 (page 2998). That is, the scrubber water is expected to be acidic (pH of approximately 2).

ALKALI LEACH WASH

Four plants reported using water for an alkali leaching step in which wolframite type ores, $(Fe,Mn)WO_4$ are digested in a caustic solution to produce sodium tungstate, Na_2WO_4. Na_2WO_4 is filtered from the digestion-wash liquor and the filtrate may be evaporated or reused. Table V-3 (page 2989) presents the production normalized water use and discharge flows for alkali leach wash water in liters per metric ton of sodium tungstate produced.

Although this waste stream was not sampled, it is assumed that many of the impurities that were leached away in the acid leaching process will also be present in the alkali leach wash since both start from ore concentrates. Consequently, treatable concentrations of metals and suspended solids are expected. Wastewater characteristics for acid leaching are shown in Table V-10 (page 2995).

ALKALI LEACH WASH CONDENSATE

This building block was originally omitted from the promulgated rule because the Agency believed this condensate would be accounted for through other building blocks, primarily the raffinate building block. The petitioners presented data indicating that the alkali leach wash condensate is a discrete process stream which was not covered by the raffinate building block. EPA is including this building block in the regulation and the flow basis for the limitations is the flow data provided for this unit operation.

MOLYBDENUM SULFIDE PRECIPITATION WET AIR POLLUTION CONTROL

Three plants report a precipitation step to remove molybdenum trisulfide (MoS_3) from the sodium tungstate solution. Two plants use wet scrubbers over the precipitation tanks to control hydrogen sulfide fumes. Water use and production data were not reported for one of the plants. Production data were not reported for the second plant. However, both of these plants reuse all of the spent scrubber liquor in the tungsten process. No discharge of wastewater was reported for this wastewater

stream. Although this wastewater was not sampled, it is expected to be acidic and contain captured particulates.

ION-EXCHANGE RAFFINATE (COMMINGLED AND NOT COMMINGLED WITH OTHER PROCESS AND NONPROCESS STREAMS)

Four plants use a liquid ion exchange (solvent extraction) process for producing ammonium tungstate from sodium tungstate. The wastewater discharge consists of ion-exchange raffinate and wash water used for cleansing the organic solvent. Table V-4 (page 2989) presents the production normalized water use and discharge flows for this waste stream. These flows are given in liters per metric ton of ammonium tungstate produced.

Table V-13 (page 3003) presents field sampling data for ion exchange raffinate and wash from two plants. This stream is acidic (pH of approximately 3.0) and contains treatable concentrations of toxic metals, suspended solids, and ammonia. Since an organic solvent is used in the process, this stream has measurable concentrations of organics such as acenaphthene, naphthalene, phenol, and fluorene. These organics may be present directly as solvents or as impurities in the solvents used.

CALCIUM TUNGSTATE PRECIPITATION WASH

Six plants report a flow associated with calcium tungstate (synthetic scheelite) precipitation. In this intermediate step, sodium tungstate is converted to calcium tungstate by mixing with a calcium chloride solution. The calcium tungstate crystals are allowed to settle, and the waste sodium chloride supernatant can be decanted or the precipitate recovered by filtration. Some plants also rinse the precipitate. No plants reported recycling this wastewater. The production normalized water use and discharge flows are reported in Table V-5 (page 2990) as liters per metric ton of calcium tungstate produced.

Table V-14 (page 3011) presents the sampling data for this wastewater at one plant. This waste stream is basic (pH of 11) and contains treatable concentrations of ammonia and oil and grease.

CRYSTALLIZATION AND DRYING OF AMMONIUM PARATUNGSTATE

Five plants which produce ammonium paratungstate (APT) report that wastewater is associated with the crystallization and drying step. APT crystals are precipitated and filtered from an aqueous mother liquor. This mother liquor is usually recycled or evaporated after ammonia recovery. Baghouses are used on drying furnaces to control particulate APT in furnace off-gases. Water produced during drying is usually evaporated to the atmosphere. Table V-6 (page 2991) presents the production normalized water use and discharge flows for this subdivision in liters per metric ton of APT produced.

The most significant pollutant characteristic associated with

this stream is the concentration of ammonia. Although the Agency did not specifically sample APT drying scrubber water or mother liquor, the metal constituents present should be similar to those given in the sampling data in Table V-15 (page 3015). This table gives data for scrubber water from a reduction furnace.

AMMONIUM PARATUNGSTATE CONVERSION TO OXIDES WET AIR POLLUTION CONTROL

Six plants report using water in converting APT to tungsten oxides (WO_x). In all cases a wet scrubbing system is used to control the ammonia which is driven off when APT is calcined to oxides in rotary furnaces. One plant reported recycling 100 percent of the scrubber liquor but did not report water use. To calculate production normalization factors, all oxides were assumed to be the common "yellow" oxide, WO_3. In the proposed development document, this parameter was incorrectly listed as "blue" oxide. The production normalized water use and discharge flows are presented as liters of water per metric ton of "tungstic" oxide (WO_3) in Table V-7 (page 2992).

Table V-15 (page 3016) summarizes the field sampling data for the pollutants detected in a stream which should be representative of APT reduction scrubber water with regard to toxic pollutants. Additionally, treatable concentrations of ammonia and suspended solids, and an alkaline pH are characteristic of this wastewater. The ammonia is present in the wastewater from this scrubber because it evolves as the APT is converted to an oxide. The presence of ammonia causes the pH to be elevated.

AMMONIUM PARATUNGSTATE CONVERSION TO OXIDES WATER OF FORMATION

Two plants report generating water of formation during the conversion of APT to oxide. This water is usually condensed in a gas recovery system for the hydrogen or nitrogen gas used for reduction furnace atmosphere. In some plants this water may be recondensed in the APT conversion to oxides scrubber system. Production normalized water use and discharge flows for one plant are presented in Table V-8 (page 2993) in liters per metric ton of tungstic oxide (WO_3) produced. The second plant did not report the water of formation flow. It should be noted that since this is water of formation, no water is actually used in this process.

The wastewater characteristics for this stream should be very similar to those for the scrubber waters from APT conversion to oxides furnaces as described above. Table V-15 (page 3015) is the sampling data associated with this stream.

REDUCTION TO TUNGSTEN WET AIR POLLUTION CONTROL

Seven plants that reduce tungsten oxides to tungsten metal report using water in a wet scrubbing system. The scrubbing system is used to control particulates from the furnace operation, although some plants also use a hydrogen recovery system. Table V-9 (page

2994) gives production normalized water use and discharge flows in liters per metric ton of tungsten metal for the seven plants which use water. As shown in Table V-9, three plants use a total recycle of this stream.

Particulates and soluble salts from fluxes used in the reduction furnaces will characterize this waste stream. Treatable concentrations of ammonia and an alkaline pH are also found. Table V-15 (page 3015) presents field sampling data for samples taken from two different reduction furnace scrubber waters. One sample contains wastewater combined with APT conversion to oxides scrubber water.

REDUCTION TO TUNGSTEN METAL WATER OF FORMATION

Plants that reduce oxides to tungsten metal in a hydrogen atmosphere may generate a water of formation as generalized by the following reaction:

$$WO_x + H_2 \text{ ----> } W + H_2O$$

In some plants this water may be recondensed in the reduction furnace scrubber system. Production normalized water use and discharge flows for this subdivision are presented in Table V-9 (page 2994) in liters per metric ton of tungsten metal. It should be noted that since this is a water of formation, no water is actually used in this process.

Wastewater sampling data for this stream are presented in Table V-16 (page 3017). This wastewater is basic (pH of approximately 9.6) and contains treatable concentrations of ammonia and suspended solids.

TUNGSTEN POWDER ACID LEACH AND WASH

Two plants report leaching tungsten powder with acids to produce a high-purity product. Both plants discharge the spent acid and wash water. The production normalized water use and discharge rates are presented in Table V-11 (page 2995) in liters per metric ton of tungsten produced.

Although the Agency did not sample tungsten powder acid leach and wash wastewater, it is expected to be very acidic (pH of approximately 1 to 2) and contain suspended solids.

TABLE V-1

WATER USE AND DISCHARGE RATES FOR TUNGSTIC ACID RINSE WATER
(10^3 l/kkg of Tungstic Acid Produced)

Plant Code	Percent Recycle	Production Normalized Water Use	Production Normalized Discharge Flow
9011	0	57.6	57.6
9014	0	2.78	2.78

TABLE V-2

WATER USE AND DISCHARGE RATES FOR ACID LEACH WET AIR POLLUTION CONTROL
(10^3 l/kkg of Tungstic Acid Produced)

Plant Code	Percent Recycle	Production Normalized Water Use	Production Normalized Discharge Flow
9011	0	37.7	37.7
9014	100	15.0	0*

*100 percent reuse as tungstic acid rinse water.

TABLE V-3

WATER USE AND DISCHARGE RATES FOR ALKALI LEACH WASH
(10^3 l/kkg of Sodium Tungstate Produced)

Plant Code	Percent Recycle	Production Normalized Water Use	Production Normalized Discharge Flow
9011	0	24.4	0*
9012	0	NR	0*
9017	0	82.6	0*
9030	0	303.0	0*

TABLE V-4

WATER USE AND DISCHARGE RATES FOR ION-EXCHANGE RAFFINATE
(10^3 l/kkg of Ammonium Tungstate Produced)

Plant Code	Percent Recycle	Production Normalized Water Use	Production Normalized Discharge Flow
9012	0	76.06	76.06
9017	0	47.9	47.9
9030	21	256.0	203.0
9031	0	28.16	28.16

NR - Present but data not reported in dcp.

*Zero discharge through 100 percent evaporation or reuse in other processes.

TABLE V-5

WATER USE AND DISCHARGE RATES FOR CALCIUM TUNGSTATE PRECIPITATE WASH
(10^3 l/kkg of Calcium Tungstate Produced)

Plant Code	Percent Recycle	Production Normalized Water Use	Production Normalized Discharge Flow
9011	0	21.0	21.0
9012	0	40.5	40.5
9014	0	65.8	65.8
9017	0	24.7	24.7
9030	0	385.0	385.0
9031	0	83.7	83.7

TABLE V-6

WATER USE AND DISCHARGE RATES FOR AMMONIUM PARATUNGSTATE CRYSTALLIZATION AND DRYING
(10^3 l/kkg of Ammonium Paratungstate Produced)

Plant Code	Percent Recycle	Production Normalized Water Use	Production Normalized Discharge Flow	
9011	0	3.03	2.93	(a)
9012	100	NR	0	(b)
9014	100	NR	0	(c)
9017	NR	68.6	0	(d)
9030	0	54.5	0	(e)

NR - Present but data not reported in dcp.

(a) Partial evaporation.

(b) Recycled in ammonia recovery system.

(c) Crystallization wastewater recycled in ammonia recovery system; water from drying is 100 percent evaporated.

(d) 100 percent evaporation.

(e) 100 percent reuse.

TABLE V-7

WATER USE AND DISCHARGE RATES FOR APT CONVERSION TO OXIDES WET AIR POLLUTION CONTROL
(10^3 l/kkg of Tungstic Oxide (WO_3) Produced)

Plant Code	Percent Recycle	Production Normalized Water Use	Production Normalized Discharge Flow
9012	0	36.8	36.8
9014	0	7.43	7.43
9015	100	NR	0
9018	0	28.4	28.4
9025	0	17.54	17.54
9029	0	19.4	19.4

NR - Present but data not reported in dcp.

TABLE V-8

WATER USE AND DISCHARGE CHARACTERISTICS FOR APT CONVERSION TO OXIDES WATER OF FORMATION (10^3 l/kkg of Tungstic Oxide (WO_3) Produced)

Plant Code	Percent Recycle	Production Normalized Water Use	Production Normalized Discharge Flow
9011	0	0.05	0 (a)
9010	0	NR	0 (b)

(a) 100 percent evaporation.

(b) Contract hauled.

NR - Present but data not reported in dcp.

TABLE V-9

WATER USE AND DISCHARGE RATES FOR REDUCTION TO TUNGSTEN WET AIR POLLUTION CONTROL
(10^3 l/kkg of Tungsten Produced)

Plant Code	Percent Recycle	Production Normalized Water Use	Production Normalized Discharge Flow
9012	0	426.0	426.0
9014	0	9.1	9.1
9015	100	NR	0
9016	100	939.0	0
9018	0	65.9	65.9
9024	100	358.0	0
9029	0	17.4	17.4

NR - Present but data not reported in dcp.

TABLE V-10

WATER USE AND DISCHARGE RATES FOR REDUCTION TO TUNGSTEN WATER OF FORMATION
(10^3 l/kkg of Tungsten Produced)

Plant Code	Percent Recycle	Production Normalized Water Use	Production Normalized Discharge Flow
9010	NR	0	NR
9011	0	0	0*
9014	NR	0	NR
9025	0	0	0.440
9026	0	0	0.208
9028	0	0	1.043

TABLE V-11

WATER USE AND DISCHARGE RATES FOR TUNGSTEN POWDER ACID LEACH AND WASH
(10^3 l/kkg of Tungsten Produced)

Plant Code	Percent Recycle	Production Normalized Water Use	Production Normalized Discharge Flow
9011	0	3.2	3.2
9029	0	1.6	1.6

NR - Present but data not reported in dcp.

*100 percent evaporation or reuse; 267 l/kkg generated.

Table V-12

PRIMARY TUNGSTEN SAMPLING DATA
TUNGSTIC ACID RINSE
RAW WASTEWATER

	Pollutant	Stream Code	Sample Type †	Concentrations (mg/l, except as noted) Source	Day 1	Day 2	Day 3	Average
	Toxic Pollutants (a)							
1.	acenaphthene	220	1	*	ND			
4.	benzene	64	2	*	*	*	*	*
		220	2	ND	*	*		*
6.	carbon tetrachloride	64	2	ND	ND	ND	ND	
8.	1,2,4-trichlorobenzene	64	7	ND	ND			
10.	1,2-dichloroethane	64	2	ND	ND	ND	ND	
		220	2	ND	ND	ND		
14.	1,1,2-trichloroethane	220	2	ND	ND	ND		
15.	1,1,2,3-tetrachloroethane	220	2	*	*	*		*
23.	chloroform	64	2	.075	.025	.017	.043	.028
		220	2	*	ND	ND		
25.	1,2-dichlorobenzene	64	7	ND	ND			
29.	1,1-dichloroethylene	64	2	ND	ND	ND	.019	.019
		220	2	ND	ND	ND		
38.	ethylbenzene	220	2	ND	ND	ND		

Table V-12 (Continued)

PRIMARY TUNGSTEN SAMPLING DATA
TUNGSTIC ACID RINSE
RAW WASTEWATER

	Pollutant	Stream Code	Sample Type †	Concentrations (mg/l, except as noted) Source	Day 1	Day 2	Day 3	Average
44.	methylene chloride	220	2	ND	ND	ND		
47.	bromoform	220	2	ND	ND	ND		
48.	dichlorobromomethane	64	2	ND	ND	ND	ND	
		220	2	ND	ND	ND		
51.	chlorodibromomethane	220	2	ND	ND	ND		
55.	naphthalene	64	7	ND	*			*
		220	1	*	ND			
56.	nitrobenzene	64	2	ND	ND			
66.	bis(2-ethylhexyl) phthalate	64	1	0.06	0.94			0.94
		220	1	0.058	*			*
68.	di-n-butyl phthalate	64	7	0.011	0.035			0.035
69.	di-n-octyl phthalate	64	7	0.037	0.038			0.038
70.	diethyl phthalate	64	7	ND	ND			
71.	dimethyl phthalate	64	7	ND	ND			
76.	chrysene	64	7	ND	0.024			0.024

Table V-12 (Continued)

PRIMARY TUNGSTEN SAMPLING DATA
TUNGSTIC ACID RINSE
RAW WASTEWATER

				Concentrations (mg/l, except as noted)				
	Pollutant	Stream Code	Sample Type †	Source	Day 1	Day 2	Day 3	Average
77.	acenaphthylene	220	1	ND	ND			
78.	anthracene (b)	64	7	ND	<0.014			<0.014
81.	phenanthrene (b)	220	1	<0.016	ND			
80.	fluorene	220	1	*	*			*
84.	pyrene	64	7	*	*			*
85.	tetrachloroethylene	64	2	*	*	*	*	*
		220	2	*	0.012	*		0.006
86.	toluene	220	2	ND	*	*		*
87.	trichloroethylene	64	2	<0.043	*	ND	<0.02	<0.015
		220	2	ND	*	*		*
89.	aldrin	220	1	ND	ND			
95.	alpha-endosulfan	220	1	ND	ND			
96.	beta-endosulfan	220	1	ND	ND			
106.	PCB-1242 (c)	220	1	**	**			**
107.	PCB-1254 (c)							
108.	PCB-1221 (c)							

Table V-12 (Continued)

PRIMARY TUNGSTEN SAMPLING DATA
TUNGSTIC ACID RINSE
RAW WASTEWATER

Pollutant	Stream Code	Sample Type †	Concentrations (mg/l, except as noted) Source	Day 1	Day 2	Day 3	Average
109. PCB-1232 (d)	220	1	**	**			**
110. PCB-1248 (d)							
111. PCB-1260 (d)							
112. PCB-1016 (d)							
114. antimony	220	1	<0.1	<0.1			<0.1
115. arsenic	64	7	<0.01	7.2			7.2
	220	1	<0.01	0.13			0.13
117. beryllium	64	7	<.001	0.03			0.03
118. cadmium	64	7	0.008	0.2			0.2
	220	1	<0.002	0.03			0.03
119. chromium	64	7	<0.005	2.0			2.0
	220	1	<0.005	0.1			0.1
120. copper	64	7	0.01	5.0			5.0
	220	1	0.01	0.2			0.2
121. cyanide	64	7		0.009	0.02	0.009	0.01
	220	1		<0.001			<0.001
122. lead	64	7	<0.02	20.0			20.0
	220	1	<0.02	<0.2			<0.2

Table V-12 (Continued)

PRIMARY TUNGSTEN SAMPLING DATA
TUNGSTIC ACID RINSE WATER
RAW WASTEWATER

Pollutant	Stream Code	Sample Type †	Concentrations (mg/l, except as noted) Source	Day 1	Day 2	Day 3	Average
123. mercury	64	7	<0.0001	0.0011			0.0011
	220	1	<0.0001	0.0005			0.0005
124. nickel	64	7	<0.005	1.0			1.0
	220	1	<0.005	<0.05			<0.05
125. selenium	220	1	<0.01	<0.01			<0.01
126. silver	64	7		0.29			0.29
	220	1	<0.02	<0.02			<0.02
127. thallium	64	7	<0.01	0.7			0.7
	220	1	<0.1	<0.1			<0.01
128. zinc	64	7	0.08	2.0			2.0
	220	1	0.1	0.6			0.6
Nonconventionals							
aluminum	64	7	<0.050	3.0			3.0
ammonia	64	2		3.1	3.4	3.2	3.233
chemical oxygen demand (COD)	64	2		323			323
	220	2		22			22
cobalt	64	7	<0.005	4.0			4.0

Table V-12 (Continued)

PRIMARY TUNGSTEN SAMPLING DATA
TUNGSTIC ACID RINSE
RAW WASTEWATER

Pollutant	Stream Code	Sample Type †	Concentrations (mg/l, except as noted) Source	Day 1	Day 2	Day 3	Average
iron	64	7	<0.02	50.0			50.0
manganese	64	7	<0.005	2.0			2.0
chloride	64	2	25,700				25,700
	220	2	16,600				16,600
phenols (total; by 4-AAP method)	64	2		0.023	0.024	0.221	0.0893
	220	2		0.029			0.029
total organic carbon (TOC)	64	2		6			6
	220	2		4			4
Conventionals							
oil and grease	64	2		6	2	11	6
	220	2		1	3		2
total suspended solids (TSS)	64	7		209			209
	220	2		19			19
pH (standard units)	64	1		0.85	0.6	1.0	
	220	1		1.80	1.80		

Table V-12 (Continued)

PRIMARY TUNGSTEN SAMPLING DATA
TUNGSTIC ACID RINSE
RAW WASTEWATER

(a) One sample from each stream was analyzed for acid extractable toxic organic pollutants; none was reported above its analytical quantification concentration.

(b), (c), (d) Reported together.

†Sample type. Note: These numbers also apply to subsequent sampling data tables in this section.

1 - one-time grab
2 - 24-hour manual composite
3 - 24-hour automatic composite
4 - 48-hour manual composite
5 - 48-hour automatic composite
6 - 72-hour manual composite
7 - 72-hour automatic composite

*Indicates less than or equal to 0.01 mg/l.
**Indicates less than or equal to 0.005 mg/l.

Table V-13

PRIMARY TUNGSTEN SAMPLING DATA
ION-EXCHANGE RAFFINATE
RAW WASTEWATER

Pollutant	Stream Code	Sample Type	Concentrations (mg/l, except as noted) Source	Day 1	Day 2	Day 3	Average
Toxic Pollutants(a)							
1. acenaphthene	219	7	*	0.111			0.111
4. benzene	219	2	ND	*	ND	ND	*
10. 1,2-dichloroethane	219	2	ND	*	ND	*	*
14. 1,1,2-trichloroethane	219	2	ND	ND	ND	ND	
15. 1,1,2,2-tetrachloroethane	219	2	*	<0.043	*	*	<0.021
23. chloroform	219	2	*	0.014	*	0.036	0.017
29. 1,1-dichloroethylene	219	2	ND	ND	ND	ND	
38. ethylbenzene	219	2	ND	0.011	ND	*	0.0055
44. methylene chloride	219	2	ND	ND	ND	ND	
47. bromoform	219	2	ND	ND	0.036	0.053	0.0445
48. dichlorobromomethane	219	2	ND	ND	ND	ND	

Table V-13 (Continued)

PRIMARY TUNGSTEN SAMPLING DATA
ION-EXCHANGE RAFFINATE
RAW WASTEWATER

Pollutant	Stream Code	Sample Type	Concentrations (mg/l, except as noted) Source	Day 1	Day 2	Day 3	Average
51. chlorodibromomethane	219	2	ND	0.038	ND	ND	0.038
54. isophorone	311	3	ND	ND	ND	0.00816	0.00816
55. naphthalene	219	7	*	1.078			1.078
	311	3	ND	0.00732	0.00576	0.00818	0.00708
65. phenol	311	3	ND	0.0718	0.0654	0.067	0.0680
66. bis(2-ethylhexyl)phthalate	219	7	0.058	0.016			0.016
	311	3	ND	0.00382	0.00204	ND	0.0029
68. di-n-butyl phthalate	311	3	0.00172	0.00522	0.00284	0.00430	0.0041
69. di-n-octyl phthalate	311	3	ND	ND	0.00155	ND	0.00155
70. diethyl phthalate	311	3	ND	0.00274	0.00181	ND	0.00220
71. dimethyl phthalate	311	3	ND	0.00670	ND	ND	0.00670
77. acenaphthylene	219	7	ND	0.112			0.112
78. anthracene (b)	219	7	<0.016	<0.325			<0.325

Table V-13 (Continued)

PRIMARY TUNGSTEN SAMPLING DATA
ION-EXCHANGE RAFFINATE
RAW WASTEWATER

Pollutant	Stream Code	Sample Type	Concentrations (mg/l, except as noted) Source	Day 1	Day 2	Day 3	Average
81. phenanthrene (b)							
80. fluorene	219	7	*	0.06			0.06
85. tetrachloro-ethylene	219	2	*	<0.053	0.026	0.037	<0.021
86. toluene	219	2	ND	0.046	0.020	*	0.022
	311	3	ND	ND	0.005	ND	0.005
87. trichloro-ethylene	219	2	ND	*	ND	ND	*
89. aldrin	219	7	ND	ND			
95. alpha-endo-sulfan	219	7	ND	**			**
96. beta-endo-sulfan	219	7	ND	ND			
106. PCB-1242 (c)	219	7	**	**			**
107. PCB-1254 (c)							
108. PCB-1221 (c)							
109. PCB-1232 (d)	219	7	**	**			**
110. PCB-1248 (d)							
111. PCB-1260 (d)							
112. PCB-1016 (d)							

Table V-13 (Continued)

PRIMARY TUNGSTEN SAMPLING DATA
ION-EXCHANGE RAFFINATE
RAW WASTEWATER

Pollutant	Stream Code	Sample Type	Concentrations (mg/l, except as noted) Source	Day 1	Day 2	Day 3	Average
114. antimony	219	7	<0.1	<0.1			<0.1
	311	3	0.0020	0.031	0.035	0.0080	0.025
115. arsenic	219	7	<0.01	0.22			0.22
	311	3	0.0050	0.041	0.050	0.060	0.0503
117. beryllium	311	3	<0.01	<0.01	<0.01	<0.01	<0.01
118. cadmium	219	7	<0.002	<0.02			<0.02
	311	3	<0.05	<0.05	<0.05	<0.05	<0.05
119. chromium	219	7	<0.005	<0.05			<0.05
	311	3	<0.1	<0.1	<0.1	<0.1	<0.1
120. copper	219	7	0.01	0.1			0.1
	311	3	<0.01	<0.01	<0.01	0.03	0.01
121. cyanide	219	7		0.002	0.003	0.002	0.002
	311	3	0.29	0.055			0.055
122. lead	219	7	<0.02	<0.2			<0.2
	311	3	<0.1	<0.1	<0.1	<0.1	<0.1
123. mercury	219	7	<0.0001	0.0003			0.0003
	311	3	<0.0010	<0.0010	<0.0010	0.0013	0.0004

Table V-13 (Continued)

PRIMARY TUNGSTEN SAMPLING DATA
ION-EXCHANGE RAFFINATE
RAW WASTEWATER

Pollutant	Stream Code	Sample Type	Concentrations (mg/l, except as noted) Source	Day 1	Day 2	Day 3	Average
124. nickel	219	7	<0.005	<0.05			<0.05
	311	3	<0.1	<0.1	<0.1	<0.1	<0.1
125. selenium	219	7	<0.01	<0.01			<0.01
	311	3	<0.01	<0.01	<0.01	<0.01	<0.01
126. silver	219	7	<0.02	0.1			0.1
	311	3	<0.007	0.007	0.005	0.004	0.005
127. thallium	219	7	<0.1	<0.1			<0.1
	311	3	<0.005	<0.005	<0.005	<0.005	<0.005
128. zinc	219	7	0.1	<0.6			<0.6
	311	3	<0.050	0.36	0.44	<0.050	0.27
Nonconventionals							
acidity	311	3	<1	190	160	180	176
alkalinity	311	3	200	<1	<1	<1	<1
aluminum	219	2	<0.5	0.6			0.6
	311	3	0.037	0.73	0.37	0.18	0.42
ammonia	219	2		134	162	1,790	695
	311	3	0.75	310	340	330	330
barium	311	3	0.20	0.059	0.036	0.047	0.047

Table V-13 (Continued)

PRIMARY TUNGSTEN SAMPLING DATA
ION-EXCHANGE RAFFINATE
RAW WASTEWATER

Pollutant	Stream Code	Sample Type	Concentrations (mg/l, except as noted) Source	Day 1	Day 2	Day 3	Average
boron	311	3	<0.100	2.50	0.740	1.06	1.4
calcium	311	3	63.5	29.4	38.4	46.2	38.0
chemical oxygen demand (COD)	219	2		127			127
	311	3	<1	140	140	150	143
chloride	311	3	20	41	51	50	47
cobalt	219	2	<0.005	<0.05			<0.05
	311	3	<0.1	<0.1	<0.1	<0.1	<0.1
fluoride	311	3	0.68	350	130	160	21
iron	219	2	<0.2	<2.0			<2.0
	311	3	0.230	5.90	4.76	7.80	6.15
magnesium	311	3	15.6	7.10	11.6	16.4	11.7
manganese	219	2	<0.005	0.2			0.2
	311	3	0.090	0.16	0.12	<0.010	0.093
molybdenum	311	3	<0.01	<0.01	<0.01	<0.01	<0.01
phenols (total; by 4-AAP method)	219	2		0.002	0.065	0.051	0.03933
	311	3	<0.005	0.064	0.064	0.080	0.069

Table V-13 (Continued)

PRIMARY TUNGSTEN SAMPLING DATA
ION-EXCHANGE RAFFINATE
RAW WASTEWATER

Pollutant	Stream Code	Sample Type	Concentrations (mg/l, except as noted) Source	Day 1	Day 2	Day 3	Average
phosphate	311	3	5	9.1	4	4	5.7
sodium	311	3	17	18,000	1,980	20,800	13,600
sulfate	311	3	75	60,000	60,000	66,000	62,000
tin	311	3	<0.2	<0.2	<0.2	<0.2	<0.2
titanium	311	3	<0.02	<0.02	<0.02	<0.02	<0.02
total dissolved solids (TDS)	311	3	430	86,000	91,000	88,000	88,000
total organic carbon (TOC)	219	2		28			28
	311	3	<1	53	51	75	59
total solids (TS)	311	3	500	88,000	92,000	82,000	87,000
vanadium	311	3	<0.01	<0.01	<0.01	<0.01	<0.01
yttrium	311	3	0.056	<0.020	<0.020	0.046	0.015

Table V-13 (Continued)

PRIMARY TUNGSTEN SAMPLING DATA
ION-EXCHANGE RAFFINATE
RAW WASTEWATER

Pollutant	Stream Code	Sample Type	Concentrations (mg/l, except as noted) Source	Day 1	Day 2	Day 3	Average
Conventionals							
oil and grease	219	2		5	3	13	7
	311	3	<1	120	<1	<1	40
total suspended solids (TSS)	219	2		43			43
	311	3	3	33	3	9.7	15.2
pH (standard units)	219	1		2.4	2.5	2.5	
	311	3	6.00	3.60	3.98	2.79	

(a) For stream 219, one sample was analyzed for the acid extractable toxic organic pollutants; none was reported above its analytical quantification concentration.

(b), (c), (d) Reported together for stream 219.

*Less than or equal to 0.01 mg/l.

**Less than or equal to 0.005 mg/l.

For stream 311, three samples were analyzed for the acid extractable, base-neutral

Table V-14

PRIMARY TUNGSTEN SAMPLING DATA
SYNTHETIC SCHEELITE FILTRATE
RAW WASTEWATER

Pollutant	Stream Code	Sample Type	Concentrations (mg/l, except as noted) Source	Day 1	Day 2	Day 3	Average
Toxic Pollutants(a)							
11. 1,1,1-trichloroethane	312	1	ND		0.020		0.020
55. naphthalene	312	1	ND		0.0588		0.0588
65. phenol	312	1	ND		0.118		0.118
66. bis(2-ethylhexyl) phthalate	312	1	ND		0.0876		0.0876
68. di-n-butyl phthalate	312	1	0.00172		ND		
69. di-n-octyl phthalate	312	1	ND		0.048		0.048
73. benzo(a)pyrene	312	1	ND		0.120		0.120
79. benzo(ghi)perylene	312	1	ND		0.139		0.139
82. dibenzo(a,h)anthracene	312	1	ND		0.108		0.108
114. antimony	312	1	<0.0020		<0.0020		<0.0020
115. arsenic	312	1	<0.0050		<0.0050		<0.0050
117. beryllium	312	1	<0.010		<0.010		<0.010
118. cadmium	312	1	<0.050		<0.050		<0.050

Table V-14 (Continued)

PRIMARY TUNGSTEN SAMPLING DATA
SYNTHETIC SCHEELITE FILTRATE
RAW WASTEWATER

Pollutant	Stream Code	Sample Type	Concentrations (mg/l, except as noted) Source	Day 1	Day 2	Day 3	Average
119. chromium (total)	312	1	<0.100		<0.100		<0.100
120. copper	312	1	<0.010		0.018		0.018
121. cyanide (total)	312	1	0.29		0.064		0.064
122. lead	312	1	<0.100		<0.100		<0.100
123. mercury	312	1	<0.0010		0.0012		0.0012
124. nickel	312	1	<0.100		<0.100		<0.100
125. selenium	312	1	<0.0100		<0.0100		<0.0100
126. silver	312	1	<0.002		<0.002		<0.002
127. thallium	312	1	<0.005		<0.005		<0.005
128. zinc	312	1	<0.050		<0.050		<0.050
Nonconventional Pollutants							
acidity	312	1	<1		<1		<1
alkalinity	312	1	200		1,900		1,900
aluminum	312	1	0.0370		1.04		1.04

Table V-14 (Continued)

PRIMARY TUNGSTEN SAMPLING DATA
SYNTHETIC SCHEELITE FILTRATE
RAW WASTEWATER

Pollutant	Stream Code	Sample Type	Concentrations (mg/l, except as noted) Source	Day 1	Day 2	Day 3	Average
ammonia	312	1	0.75		630		630
barium	312	1	0.2		<0.02		<0.02
boron	312	1	<0.10		0.46		0.46
calcium	312	1	63.5		32.8		32.8
chemical oxygen demand (COD)	312	1	<1		180		180
chloride	312	1	20		17		17
cobalt	312	1	<0.1		<0.1		<0.1
fluoride	312	1	0.68		4.11		4.11
iron	312	1	0.23		0.055		0.055
magnesium	312	1	15.6		0.88		0.88
manganese	312	1	0.090		<0.010		<0.010
molybdenum	312	1	<0.02		0.042		0.042
phenolics	312	1	<0.005		0.066		0.066

Table V-14 (Continued)

PRIMARY TUNGSTEN SAMPLING DATA
SYNTHETIC SCHEELITE FILTRATE
RAW WASTEWATER

Pollutant	Stream Code	Sample Type	Concentrations (mg/l, except as noted) Source	Day 1	Day 2	Day 3	Average
phosphate	312	1	5		<4		<4
sodium	312	1	17		2,000		2,000
tin	312	1	0.321		<0.200		<0.200
titanium	312	1	<0.020		<0.02		<0.02
total dissolved solids (TDS)	312	1	430		9,240		9,240
total organic carbon (TOC)	312	1	<1		27		27
total solids (TS)	312	1	500		9,300		9,300
vanadium	312	1	<0.01		<0.01		<0.01
ytrrium	312	1	0.056		<0.020		<0.020
Conventional Pollutants							
oil and grease	312	1	<1		26		26
total suspended solids (TSS)	312	1	3		3		3
pH (standard units)	312	1	6.00		11.08		

(a) For stream 312, the acid extractable, base-neutral extractable, and volatile organic pollutant fractions were analyzed for in one sample.

Table V-15

PRIMARY TUNGSTEN SAMPLING DATA
OXIDES REDUCTION FURNACE SCRUBBER AND REDUCTION TO TUNGSTEN FURNACE SCRUBBER
RAW WASTEWATER

Pollutant	Stream Code	Sample Type	Concentrations (mg/l, except as noted) Source	Day 1	Day 2	Day 3	Average
Toxic Pollutants(a)							
114. antimony	130	1	<0.1	<0.1			<0.1
	221	1	<0.1	<0.1			<0.1
115. arsenic	130	1	<0.1	<0.1			<0.1
	221	1	<0.1	<0.1			<0.1
118. cadmium	130	1	<0.002				
119. chromium	130	1	ND	0.04			0.04
122. lead	130	1	0.030	<0.020			<0.020
123. mercury	130	1	0.0001	0.0002			0.0002
	221	1	0.0001	0.0004			0.0004
124. nickel	130	1	<0.005	<0.005			<0.005
125. selenium	130	1	<0.01	<0.01			<0.01
	221	1	<0.01	<0.01			<0.01
126. silver	130	1	<0.02	<0.02			<0.02
	221	1	<0.02	<0.02			<0.02
127. thallium	130	1	<0.1	<0.1			<0.1
	221	1	<0.1	<0.1			<0.1

Table V-15 (Continued)

PRIMARY TUNGSTEN SAMPLING DATA
OXIDES REDUCTION FURNACE SCRUBBER AND REDUCTION TO TUNGSTEN FURNACE SCRUBBER
RAW WASTEWATER

Pollutant	Stream Code	Sample Type	Concentrations (mg/l, except as noted) Source	Day 1	Day 2	Day 3	Average
Toxic Pollutants (Continued)(a)							
128. zinc	130	1	<0.065	<0.06			<0.06
	221	1	0.1	0.06			0.06
Nonconventionals							
aluminum	130	1	0.100	0.080			0.080
ammonia	130	1	0.5	435			435
chemical oxygen demand (COD)	130	1		0.48			0.48
cobalt	130	1	<0.005	0.020			0.020
iron	130	1	0.400	0.200			0.200
manganese	130	1	0.020	0.010			0.010
total organic carbon (TOC)	130	1		12			12
Conventionals							
total suspended solids (TSS)	130	1		74			74
pH (standard units)	130	1		12			

(a) Stream 221 was analyzed only for the toxic metal pollutants; only mercury and zinc were detected.

Table V-16

PRIMARY TUNGSTEN SAMPLING DATA
REDUCTION TO TUNGSTEN WATER OF FORMATION
RAW WASTEWATER

Pollutant (a)	Stream Code	Sample Type	Concentrations (mg/l, except as noted) Source	Day 1	Day 2	Day 3	Average
Toxic Pollutants							
114. antimony	301	1	<0.01	<0.01			<0.01
115. arsenic	301	1	<0.01	<0.02 (b)			<0.02
117. beryllium	301	1	<0.005	<0.005			<0.005
118. cadmium	301	1	<0.02	<0.02			<0.02
119. chromium (total)	301	1	<0.02	<0.02			<0.02
120. copper	301	1	<0.05	0.25			0.25
122. lead	301	1	<0.05	<0.05			<0.05
123. mercury	301	1	<0.0002	<0.0002			<0.0002
124. nickel	301	1	<0.5 (b)	<0.05 (b)			<0.05
125. selenium	301	1	<0.01	<0.01			<0.01
126. silver	301	1	<0.01	<0.01			<0.01
127. thallium	301	1	<0.01	<0.01			<0.01
128. zinc	301	1	0.08	0.14			0.14

Table V-16 (Continued)

PRIMARY TUNGSTEN SAMPLING DATA
REDUCTION TO TUNGSTEN WATER OF FORMATION
RAW WASTEWATER

Pollutant (a)	Stream Code	Sample Type	Concentrations (mg/l, except as noted) Source	Day 1	Day 2	Day 3	Average
Nonconventional Pollutants							
acidity	301	1	<1	<1			<1
alkalinity	301	1	40	500			500
aluminum	301	1	0.2	<0.1			<0.1
ammonia	301	1	2.0	180			180
barium	301	1	<0.05	<0.05			<0.05
boron	301	1	<0.1	3.8			3.8
calcium	301	1	25.7	<0.1			<0.1
chemical oxygen demand (COD)	301	1	110	50			50
chloride	301	1	11	87			87
cobalt	301	1	<0.05	<0.05			<0.05
fluoride	301	1	0.64	86			86
iron	301	1	<0.5 (b)	0.7 (c)			0.7
magnesium	301	1	4.5	<0.1			<0.1

Table V-16 (Continued)

PRIMARY TUNGSTEN SAMPLING DATA
REDUCTION TO TUNGSTEN WATER OF FORMATION
RAW WASTEWATER

Pollutant (a)	Stream Code	Sample Type	Concentrations (mg/l, except as noted) Source	Day 1	Day 2	Day 3	Average
manganese	301	1	<0.05	<0.05			<0.05
molybdenum	301	1	<0.05	<0.05			<0.05
phosphate	301	1	0.82	0.76			0.76
sodium	301	1	4.5	<0.1			<0.1
sulfate	301	1	590	2,200			2,200
tin	301	1	<0.05	<0.05			<0.05
titanium	301	1	<0.05	<0.05			<0.05
total dissolved solids (TDS)	301	1	175	140			140
total organic carbon (TOC)	301	1	<1	51			51
total solids (TS)	301	1	250	200			200
vanadium	301	1	<0.05	<0.05			<0.05
ytrrium	301	1	<0.05	<0.05			<0.05

Table V-16 (Continued)

PRIMARY TUNGSTEN SAMPLING DATA
REDUCTION TO TUNGSTEN WATER OF FORMATION
RAW WASTEWATER

Pollutant (a)	Stream Code	Sample Type	Concentrations (mg/l, except as noted) Source	Day 1	Day 2	Day 3	Average
Conventional Pollutants							
oil and grease	301	1	<1	<1			<1
total suspended solids (TSS)	301	1	19	62			62
pH (standard units)	301	1	7.60	9.64			

(a) Toxic organic pollutants were not analyzed for this waste stream

(b) Detection limit raised because of interference

(c) Sample was redigested and reanalyzed due to high blanks

Table V-17

PRIMARY TUNGSTEN SAMPLING DATA
TREATMENT PLANT SAMPLES - PLANT B

Pollutant	Stream Code	Sample Type	Concentrations (mg/l, except as noted) Source	Day 1	Day 2	Day 3	Average
Toxic Pollutants							
4. benzene	65	2	*	<0.017	*	*	<0.022
10. 1,2-dichloro-ethane	65	2	ND	0.015	ND	0.029	0.022
23. chloroform	65	2	0.075	0.031	0.041	0.083	0.052
29. 1,1-dichloro-ethylene	65	2	ND	ND	0.02	ND	0.02
48. dichlorobromo-methane	65	2	ND	0.012	*	*	0.004
66. bis(2-ethyl-hexyl)phthalate	65	7	0.06	0.797			0.797
68. di-n-butyl phthalate	65	7	0.011	0.078			0.078
69. di-n-octyl phthalate	65	7	0.037	0.08			0.08
87. trichloro-ethylene	65	2	<0.043	<0.088	<0.045	<0.03	<0.054

Table V-17 (Continued)

PRIMARY TUNGSTEN SAMPLING DATA
TREATMENT PLANT SAMPLES - PLANT B

Pollutant	Stream Code	Sample Type	Concentrations (mg/l, except as noted) Source	Day 1	Day 2	Day 3	Average
115. arsenic	65	7	<0.01	0.08			0.08
118. cadmium	65	7	0.008	0.08			0.08
119. chromium	65	7	<0.005	<0.0543			<0.0543
120. copper	65	7	0.01	0.07			0.07
121. cyanide	65	7	0.05	0.004	0.006	0.001	0.0037
122. lead	65	7	<0.02	<0.2			<0.2
124. nickel	65	7	<0.005	0.1			0.1
126. silver	65	7	<0.02	0.03			0.03
127. thallium	65	7	<0.1	0.9			0.9
128. zinc	65	7	0.08	<0.6			<0.6
Nonconventionals							
ammonia	65	2		4.9	4.2	3.7	4.3
chemical oxygen demand (COD)	65	2		53			53
chloride	65	2		19,100			19,100

Table V-17 (Continued)

PRIMARY TUNGSTEN SAMPLING DATA
TREATMENT PLANT SAMPLES - PLANT B

Pollutant	Stream Code	Sample Type	Concentrations (mg/l, except as noted) Source	Day 1	Day 2	Day 3	Average
phenols (total; by 4-AAP method)	65	2		1.55	1.17	0.62	1.11
total organic carbon (TOC)	65	2		10			10
Conventionals							
oil and grease	65	1		2	2	10	5
total suspended solids (TSS)	65	2		151			151
pH (standard units)	65	1		8.5	8.1	5.8	

Table V-18

PRIMARY TUNGSTEN SAMPLING DATA
TREATMENT PLANT SAMPLES - PLANT C

	Pollutant	Stream Code	Sample Type	Source	Concentrations (mg/l, except as noted) Day 1	Day 2	Day 3	Average
	Toxic Pollutant							
1.	acenaphthene	9	7		ND			
4.	benzene	9	1		*	ND	<0.117	<0.064
		10	1		*	<0.012	<0.017	<0.013
		11	1		*	<0.020	ND	<0.01
6.	carbon tetrachloride	11	1		ND	ND	0.022	0.022
8.	1,2,4-trichlorobenzene	11	7		0.011			0.011
10.	1,2-dichloroethane	9	1		*	0.15	ND	0.075
		10	1		0.017	0.097	ND	0.057
		11	1		ND	0.065	ND	0.065
14.	1,1,2-trichloroethane	9	1		ND	ND	0.043	0.043
		10	1		ND	ND	0.011	0.011
15.	1,1,2,3-tetrachloroethane	9	1		ND	ND	ND	
		10	1		ND	*	<0.011	<0.011
23.	chloroform	9	1		0.142	0.024	0.044	0.07
		10	1		0.342	0.54	0.045	0.309
		11	1		1.933	0.073	0.058	0.688
25.	1,2-dichlorobenzene	11	7		0.011			0.011

Table V-18 (Continued)

PRIMARY TUNGSTEN SAMPLING DATA
TREATMENT PLANT SAMPLES - PLANT C

Pollutant	Stream Code	Sample Type	Source	Concentrations (mg/l, except as noted) Day 1	Day 2	Day 3	Average
29. 1,1-dichloroethylene	9	1		0.013	0.05	ND	0.03
	10	1		0.051	0.04	ND	0.05
	11	1		0.048	ND	ND	0.048
38. ethylbenzene	9	1		ND	*	ND	*
	10	1		0.011	*	*	0.0037
44. methylene chloride	9	1		0.018	ND	ND	0.018
47. bromoform	9	1		ND	ND	ND	
48. dichlorobromomethane	9	1		ND	ND	0.117	0.117
	10	1		ND	0.012	0.022	0.017
	11	1		ND	0.012	0.048	0.03
51. chlorodibromomethane	9	1		ND	ND	0.146	0.146
	10	1		ND	ND	0.034	0.034
55. naphthalene	9	7		ND			
	11	7		0.032			0.032
56. nitrobenzene	11	7		0.011			0.011
66. bis(2-ethylhexyl)phthalate	9	7		0.03			0.03
	10	7		0.014			0.014
	11	7		0.034			0.034

Table V-18 (Continued)

PRIMARY TUNGSTEN SAMPLING DATA
TREATMENT PLANT SAMPLES - PLANT C

Pollutant	Stream Code	Sample Type	Source	Concentrations (mg/l, except as noted) Day 1	Day 2	Day 3	Average
68. di-n-butyl phthalate	11	7		0.013			0.013
	10	7		0.025			0.025
69. di-n-octyl phthalate	11	7		ND			
70. diethyl phthalate	11	7		0.016			0.016
71. dimethyl phthalate	11	7		0.23			0.23
76. chrysene	11	7		ND			
77. acenaphthylene	9	7		ND			
78. anthracene (b)	9	7		ND			
81. phenanthrene (b)	11	7		0.016			0.016
80. fluorene	9	7		ND			
84. pyrene	11	7		0.015			0.015
85. tetrachloroethylene	9	1		0.012	ND	ND	0.012
	10	1		0.078	*	*	0.026
	11	1		0.02	*	ND	0.01

Table V-18 (Continued)

PRIMARY TUNGSTEN SAMPLING DATA
TREATMENT PLANT SAMPLES - PLANT C

Pollutant	Stream Code	Sample Type	Source	Concentrations (mg/l, except as noted) Day 1	Day 2	Day 3	Average
86. toluene	9	1		*	ND	*	*
	10	1		0.011		*	0.0055
87. trichloroethylene	9	1		*	ND	<0.162	<0.086
	10	1		0.045	<0.064	<0.07	0.015
	11	1		*	<0.093	ND	<0.0515
89. aldrin	9	7		0.007			0.007
95. alpha-endosulfan	9	7		0.03			0.03
96. beta-endosulfan	9	7		0.03			0.03
106. PCB-1242 (c)	9	7		<0.012			<0.012
107. PCB-1254 (c)	10	7		<0.009			<0.009
108. PCB-1221 (c)							
109. PCB-1232 (d)	9	7		<0.015			<0.015
110. PCB-1248 (d)	10	7		<0.013			<0.013
112. PCB-1016 (d)							
114. antimony	9	7		0.8			0.8
115. arsenic	9	7		0.02			0.02
	11	7		0.018			0.018

Table V-18 (Continued)

PRIMARY TUNGSTEN SAMPLING DATA
TREATMENT PLANT SAMPLES - PLANT C

Pollutant	Stream Code	Sample Type	Source	Concentrations (mg/l, except as noted) Day 1	Day 2	Day 3	Average
117. beryllium	11	7		<0.002			<0.002
118. cadmium	9	7		<0.02			<0.02
	10	7		<0.02			<0.02
	11	7		<0.02			<0.02
119. chromium	9	7		0.044			0.044
	10	7		<0.024			<0.024
	11	7		0.0443			0.0443
120. copper	9	7		0.115			0.115
	10	7		0.148			0.148
	11	7		0.064			0.064
121. cyanide	9	7		0.159	0.179	0.096	0.1447
	10	7		0.6	0.001	0.516	0.3723
	11	7		0.014	0.021	0.286	0.106
122. lead	9	7		0.242			0.242
	10	7		0.219			0.219
	11	7		0.14			0.14
123. mercury	9	7		0.003			0.003
	10	7		0.0002			0.0002
	11	7		0.0006			0.0006

Table V-18 (Continued)

PRIMARY TUNGSTEN SAMPLING DATA
TREATMENT PLANT SAMPLES - PLANT C

	Pollutant	Stream Code	Sample Type	Source	Day 1	Day 2	Day 3	Average
				Concentrations (mg/l, except as noted)				
124.	nickel	9	7		0.092			0.092
		10	7		0.108			0.108
		11	7		<0.05			<0.05
125.	selenium	9	7		1			1
		10	7		0.09			0.09
126.	silver	9	7		ND			
127.	thallium	9	7		0.2			0.2
		10	7		0.224			0.224
		11	7		ND			
128.	zinc	9	7		0.248			0.248
		10	7		0.239			0.239
		11	7		0.083			0.083
	Nonconventionals							
	aluminum	9	7		10.0			10.0
	ammonia	9	1		2,250	950	1,630	1,610
		10	1		1,150	775	1,480	1,135
		11	1		6.8	210	700	300

Table V-18 (Continued)

PRIMARY TUNGSTEN SAMPLING DATA
TREATMENT PLANT SAMPLES - PLANT C

Pollutant	Stream Code	Sample Type	Source	Concentrations (mg/l, except as noted) Day 1	Day 2	Day 3	Average
chemical oxygen demand (COD)	9	1		881			881
	10	7		242			242
	11	1		100			100
cobalt	9	7		0.045			0.045
iron	9	7		30.0			30.0
manganese	9	7		10.0			10.0
total organic carbon (TOC)	9	1		269			269
	10	7		61			61
	11	1		33			33
phenols (total; by 4-AAP method)	9	1		0.076	0.018	0.021	0.038
	10	1		0.007	0.016	0.007	0.01
	11	1		0.011	0.01	0.013	0.011
Conventionals							
oil and grease	9	1		9	23	20	17
	10	1		6	8	18	11
	11	1		9	6	16	10
pH (standard units)	9	1		10.4	8.6	9.5	
	10	1		3.6	8.5	8.0	
	11	1		8.2	9.2	7.3	

Table V-18 (Continued)

PRIMARY TUNGSTEN SAMPLING DATA
TREATMENT PLANT SAMPLES - PLANT C

			Concentrations (mg/l, except as noted)				
Pollutant	Stream Code	Sample Type	Source	Day 1	Day 2	Day 3	Average
total suspended solids (TSS)	9	1		6,714			6,714
	10	1		374			374
	11	7		91			91

(a) One sample from each stream was analyzed for acid extractable toxic organic pollutants; none was reported above its analytical quantification concentration.

(b), (c), (d) Reported together.

*Less than or equal to 0.01 mg/l.
**Less than or equal to 0.005 mg/l.

Source water samples were not taken at this plant.

Table V-19

PRIMARY TUNGSTEN SAMPLING DATA
TREATMENT PLANT SAMPLES - PLANT E

	Pollutant (a)	Stream Code	Sample Type	Concentrations (mg/l, except as noted) Source	Day 1	Day 2	Day 3	Average
	Toxic Pollutant							
54.	isophorone	316	3		ND	*	ND	*
65.	phenol	315	3		*	*	*	*
66.	bis(2-ethylhexyl)phthalate	315	3	0.040	*	ND	ND	*
		316	3	0.040	ND	0.208		0.208
68.	di-n-butyl phthalate	315	3	*	*	*	ND	*
		316	3	*	*	*	*	*
70.	diethyl phthalate	316	3	ND	*	ND	ND	*
114.	antimony	315	3	<0.01	<0.002	<0.002	<0.002	<0.002
		316	3		<0.002	<0.002	<0.002	<0.002
115.	arsenic	315	3	<0.01	0.058	0.324	0.076	0.152
		316	3		0.019	0.446	0.022	0.162
117.	beryllium	315	3	<0.005	<0.010	<0.010	<0.010	<0.010
		316	3		<0.01	<0.01	<0.01	<0.01
118.	cadmium	315	3	<0.02	<0.050	<0.050	<0.050	<0.050
		316	3		<0.05	0.05	0.05	0.03
119.	chromium (total)	315	3	<0.02	0.12	0.22	0.10	0.14
		316	3		<0.1	<0.1	<0.1	<0.1

Table V-19 (Continued)

PRIMARY TUNGSTEN SAMPLING DATA
TREATMENT PLANT SAMPLES - PLANT E

Pollutant (a)	Stream Code	Sample Type	Concentrations (mg/l, except as noted) Source	Day 1	Day 2	Day 3	Average
120. copper	315	3	<0.05	0.015	<0.010	<0.010	0.005
	316	3		<0.01	0.015	0.013	0.009
121. cyanide (total)	315	1	<0.02	0.082			0.082
	316	1		0.23			0.23
122. lead	315	3	<0.05	<0.100	<0.100	<0.100	<0.100
	316	3		<0.1	<0.1	<0.1	<0.1
123. mercury	315	3	<0.001	<0.0010	<0.0010	<0.0010	<0.0010
	316	3		<0.001	<0.001	<0.001	<0.001
124. nickel	315	3	<0.05	0.202	0.100	0.100	0.134
	316	3		<0.10	<0.10	0.15	0.05
125. selenium	315	3	<0.05 (b)	0.528	0.016	0.050	0.198
	316	3		0.044	0.059	0.085	0.062
126. silver	315	3	<0.01	<0.002	0.002	<0.002	0.001
	316	3		<0.002	<0.002	0.006	0.002
127. thallium	315	3	<0.01	<0.005	<0.005	<0.005	<0.005
	316	3		<0.005	0.005	0.005	0.003
128. zinc	315	3	0.06	0.11	0.30	0.18	0.19
	316	3		0.05	0.05	0.05	0.05

Table V-19 (Continued)

PRIMARY TUNGSTEN SAMPLING DATA
TREATMENT PLANT SAMPLES - PLANT E

Pollutant (a)	Stream Code	Sample Type	Concentrations (mg/l, except as noted) Source	Day 1	Day 2	Day 3	Average
Nonconventional Pollutants							
acidity	315	3	<1				
	316	3		<1	<1	<1	<1
alkalinity	315	3	73				
	316	3		164	160	160	161
aluminum	315	3	<0.10	2.5	0.38	3.5	2.1
	316	3		0.13	0.29	0.13	0.18
ammonia	315	3	<1		740	660	700
	316	3		460	390	650	500
barium	315	3	<0.05	0.10	0.060	0.0120	0.057
	316	3		0.075	0.080	0.040	0.065
boron	315	3	<0.10	0.54	<0.10	0.44	0.32
	316	3		0.24	0.30	0.26	0.26
calcium	315	3	37.2	620	839	645	701
	316	3		347	328	122	265
chemical oxygen demand (COD)	315	3	<1		150	100	125
	316	3		120	67	90	92
chloride	316	3	5	140	140	130	136

Table V-19 (Continued)

PRIMARY TUNGSTEN SAMPLING DATA
TREATMENT PLANT SAMPLES - PLANT E

Pollutant (a)	Stream Code	Sample Type	Concentrations (mg/l, except as noted) Source	Day 1	Day 2	Day 3	Average
cobalt	315	3	<0.05	<0.10	<0.10	<0.10	<0.10
	316	3		<0.1	<0.1	<0.1	<0.1
fluoride	315	3	0.1	180	0.185	120	100
	316	3		47	135	52	78
iron	315	3	0.30	10.0	18.8	31.2	20
	316	3		0.11	0.14	0.14	0.13
magnesium	315	3	5.50	11.1	32.5	33.2	25.6
	316	3		17.9	13.8	18.6	16.7
manganese	315	3	<0.05	1.89	1.24	1.19	1.44
	316	3		0.63	0.43	0.50	0.52
molybdenum	315	3	<0.05	0.30	0.35	1.00	0.55
	316	3		0.890	1.79	1.54	1.40
phenolics	315	1	<0.005	0.019	0.013	<0.005	0.010
	316	1		<0.005	<0.005	<0.005	<0.005
phosphate	315	3	0.26		<4	<8	<6
	316	3		8.0	<4	<4	2
sodium	315	3	4.10	2,750	5,020	5,500	4,400
	316	3		2,450	3,000	2,850	2,766

Table V-19 (Continued)

PRIMARY TUNGSTEN SAMPLING DATA
TREATMENT PLANT SAMPLES - PLANT E

Pollutant (a)	Stream Code	Sample Type	Concentrations (mg/l, except as noted) Source	Day 1	Day 2	Day 3	Average
sulfate	315	3	36				
	316	3		12,000	12,000	12,000	12,000
tin	315	3	0.50	<0.200	<0.200	<0.200	<0.200
	316	3		<0.200	<0.200	<0.200	<0.200
titanium	315	3	<0.05	0.042	<0.020	0.090	0.044
	316	3		<0.02	<0.02	<0.02	<0.02
total dissolved solids (TDS)	316	3	189	14,000	14,700	16,000	14,900
total organic carbon (TOC)	315	3	3		30	38	34
	316	3		6.3	5.6	5.5	5.8
total solids (TS)	316	3	200	14,000	14,500	14,000	14,000
vanadium	315	3	<0.05	<0.10	<0.10	<0.10	<0.10
	316	3		<0.1	<0.1	<0.1	<0.1
yttrium	315	3	<0.05	0.026	0.088	0.13	0.081
	316	3		0.10	0.043	0.077	0.073
Conventional Pollutants							
oil and grease	315	1	3	9.0	<1	<1	3
	316	1		2.4	1.5	<1	1.3

Table V-19 (Continued)

PRIMARY TUNGSTEN SAMPLING DATA
TREATMENT PLANT SAMPLES - PLANT E

Pollutant (a)	Stream Code	Sample Type	Source	Concentrations (mg/l, except as noted) Day 1	Day 2	Day 3	Average
total suspended solids (TSS)	315	3		(c)	(c)	(c)	
	316	3	1	6	18	7	10
pH (standard units)	315	3	6	10 (d)	10 (d)	11 (d)	
	316	3		8.30	8.11	8.29	

(a) All toxic organic pollutants except the pesticide fraction were analyzed for in both streams.

(b) Detection limit raised due to interference.

(c) TSS was not analyzed because the sample was taken from the lime pit. Lime had already been added to the wastewater.

(d) pH was not analyzed in the laboratory. The value shown is the median of the measurements taken at the sample point.

* $\leq$0.010 mg/l.

** $\leq$0.005 mg/l.

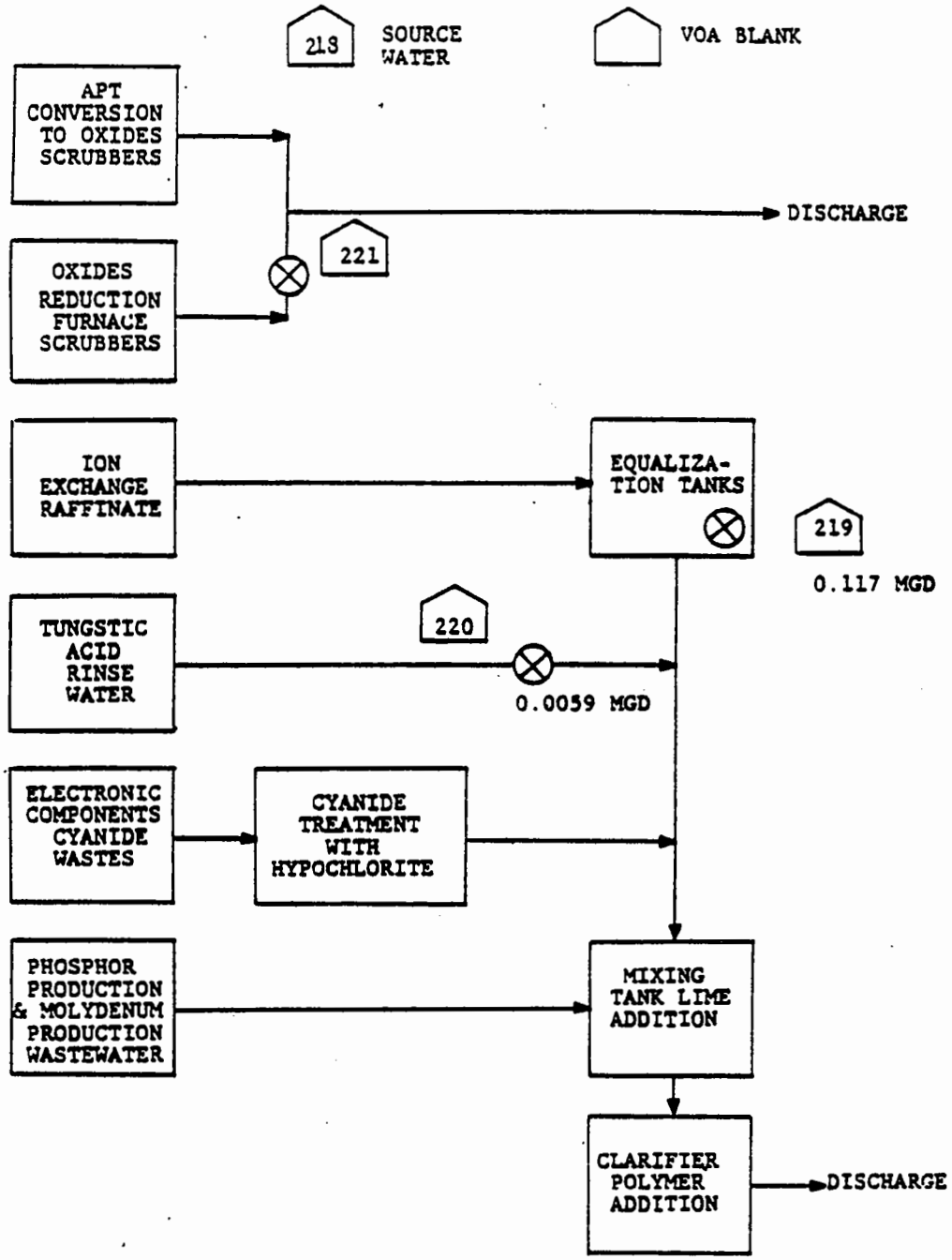

Figure V-1

SAMPLING SITES AT PRIMARY TUNGSTEN PLANT A

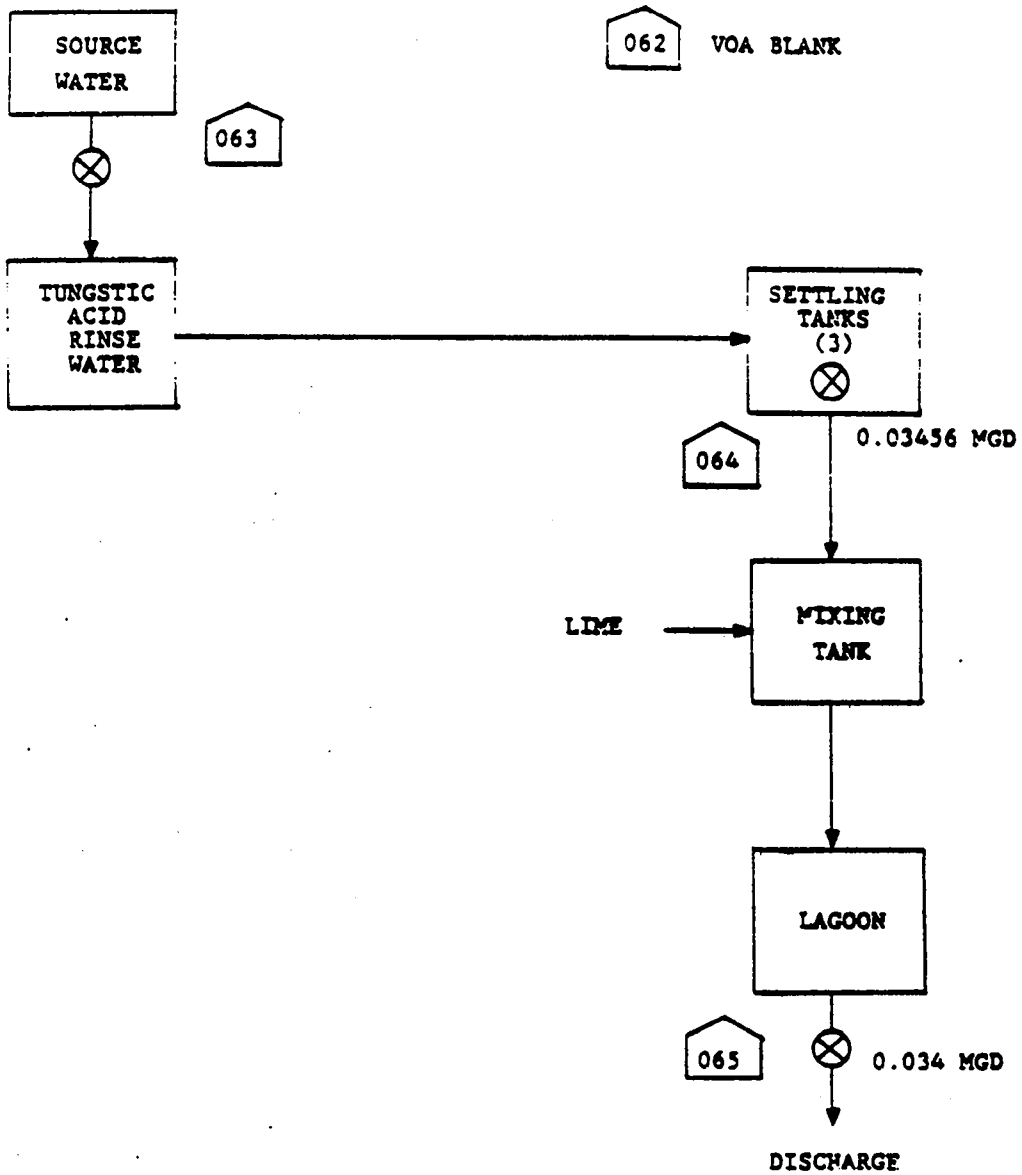

Figure V-2

SAMPLING SITES AT PRIMARY TUNGSTEN PLANT B

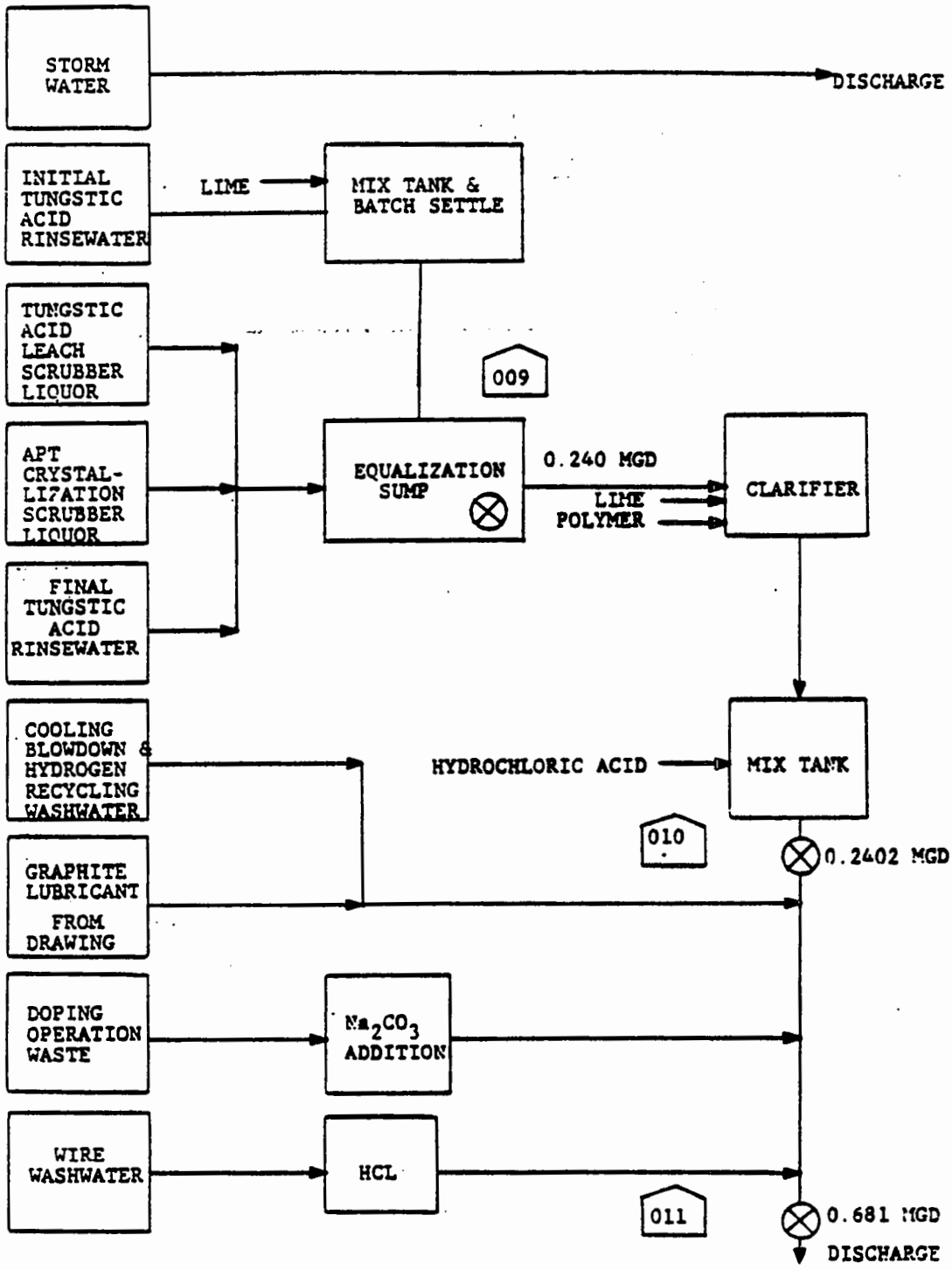

Figure V-3

SAMPLING SITES AT PRIMARY TUNGSTEN PLANT C

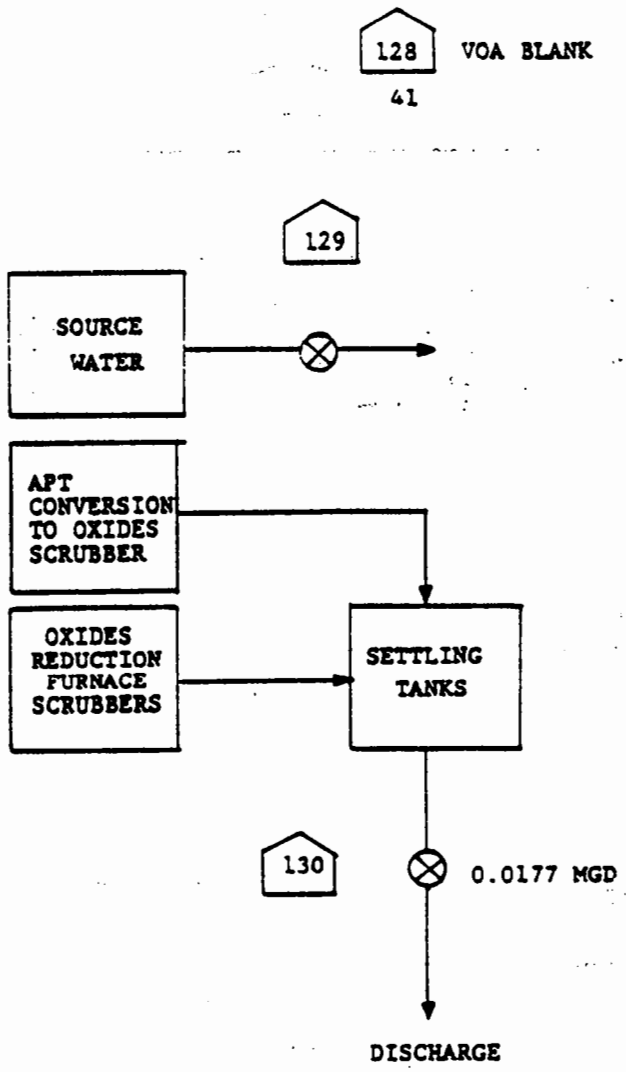

Figure V-4

SAMPLING SITES AT PRIMARY TUNGSTEN PLANT D

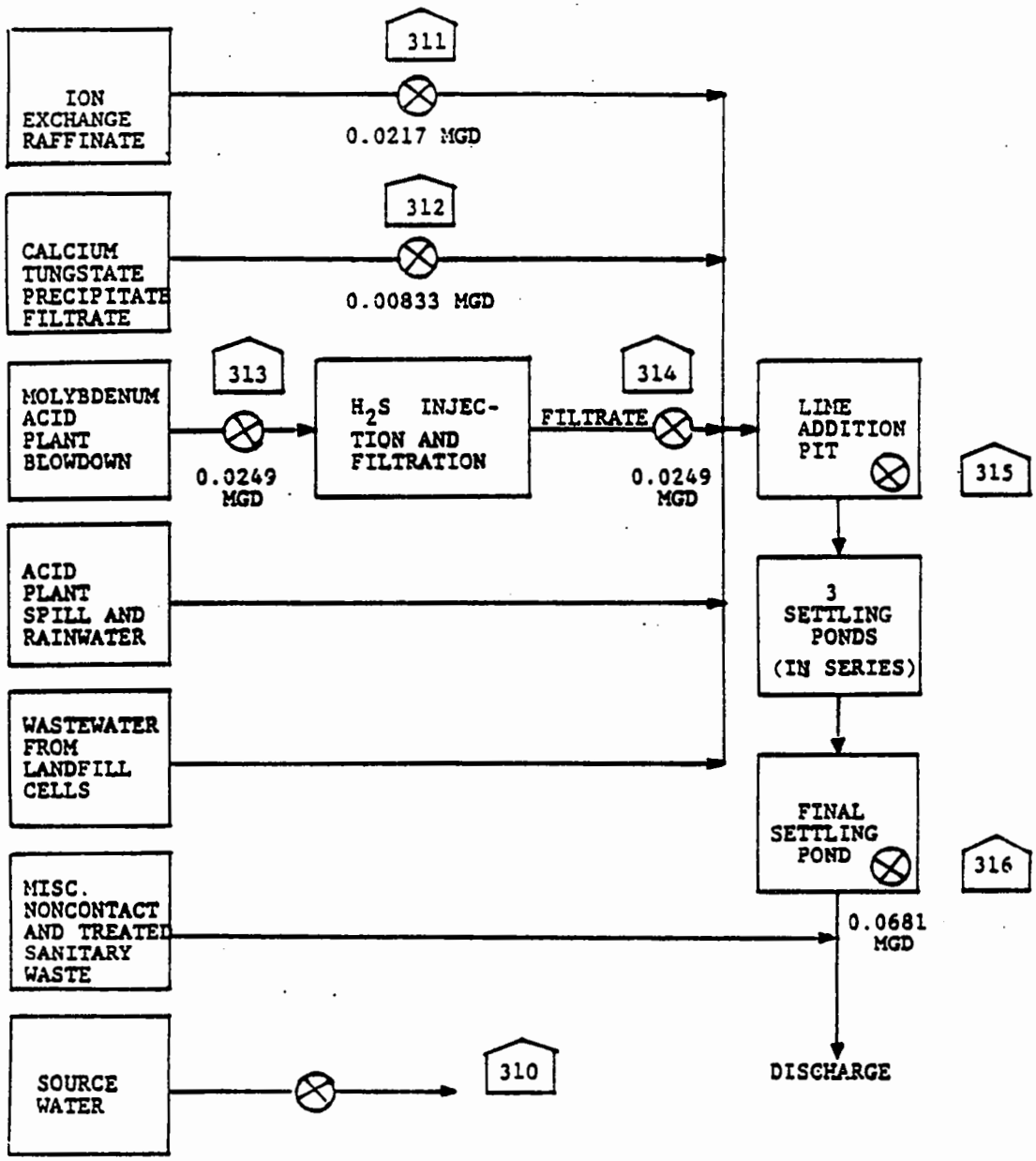

Figure V-5

SAMPLING SITES AT PRIMARY TUNGSTEN PLANT E

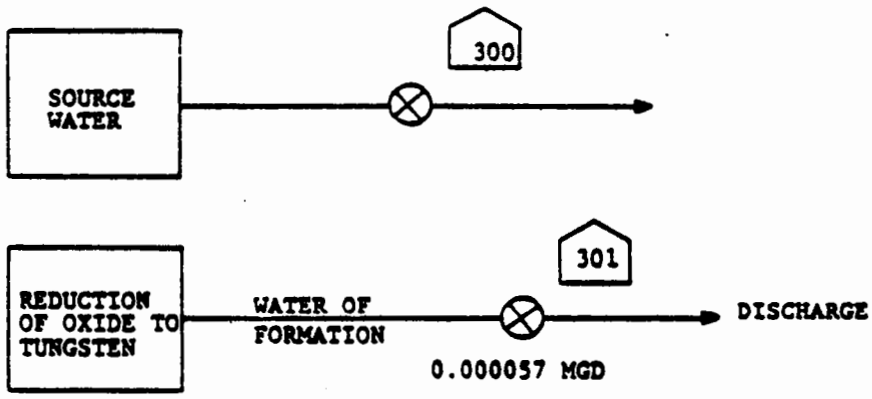

Figure V-6

SAMPLING SITES AT PRIMARY TUNGSTEN PLANT F

THIS PAGE INTENTIONALLY LEFT BLANK

Pages 3045 and 3046 are omitted.

SECTION VI

SELECTION OF POLLUTANT PARAMETERS

This section examines chemical analysis data presented in Section V and discusses the selection or exclusion of pollutants for potential limitation. The discussion that follows describes the analysis that was performed to select or exclude pollutants for further consideration for limitations and standards. Pollutants will be considered for limitation if they are present in concentrations treatable by the technologies considered in this analysis. The treatable concentrations used for the toxic metals were the long-term performance values achievable by lime precipitation, sedimentation, and filtration. The treatable concentrations used for the toxic organics were the long-term performance values achievable by carbon adsorption.

As discussed in Section V, EPA collected additional wastewater sampling data after proposal in an attempt to further characterize the primary tungsten subcategory. As a result of the new data, the Agency revised its selection of pollutant parameters as The Agency has selected seven additional pollutants for further consideration in establishing limitations and standards. These pollutants are:

11. 1,1,1-trichloroethane,
65. phenol,
73. benzo(a)pyrene,
79. benzo(ghi)perylene,
82. dibenzo(a,h)anthracene
124. nickel, and
126. silver.

All of these pollutants are present above the concentrations considered achievable by the technologies considered in this analysis. Additionally, four pollutants were removed from further consideration for limitation. These are:

1. acenaphthene
77. acenaphthylene
80. fluorene
125. selenium

The raw wastewater data show that selenium was not detected in each of the 10 samples analyzed from three plants. At proposal, partially treated wastewater was used in the selection of selenium. The selection or removal of the other pollutants is discussed below.

After proposal, the Agency also re-evaluated the treatment performance of activated carbon adsorption to control toxic organic pollutants. The treatment performance for the acid extractable, base-neutral extractable, and volatile organic

limit of 0.010 mg/l. The analytical quantification limit for pesticides and total phenols (by 4-AAP method) is 0.005 mg/l, which is below the 0.010 mg/l accepted for the other toxic organics. However, to be consistent, the treatment performance of 0.010 mg/l is used for pesticides and total phenols. The 0.010 mg/l concentration is achievable, assuming enough carbon is used in the column and a suitable contact time is allowed. The frequency of occurrence for 36 of the toxic pollutants has been redetermined based on the revised treatment performance value. As a result, the following pollutants, which were not selected at proposal, have been selected for further consideration for limitation:

85. tetrachloroethylene
86. toluene

A full discussion of pollutant selection is presented below.

CONVENTIONAL AND NONCONVENTIONAL POLLUTANT PARAMETERS

This study examined samples from the primary tungsten subcategory for three conventional pollutant parameters (oil and grease, total suspended solids, and pH) and four nonconventional pollutant parameters (ammonia, chemical oxygen demand, total organic carbon, and total phenols).

CONVENTIONAL AND NONCONVENTIONAL POLLUTANT PARAMETERS SELECTED

The conventional and nonconventional pollutants or pollutant parameters selected for limitation in this subcategory are:

ammonia
total suspended solids (TSS)
pH

Ammonia is the only nonconventional pollutant parameter selected for consideration in establishing limitations for this subcategory. Ammonia was found in all 12 raw waste samples analyzed for this subcategory in concentrations ranging from 3.1 to 1,790 mg/l. Nine of the values recorded are well above the 32.2 mg/l concentration attainable by the available treatment technology. The ammonia is used as a process reagent. Additionally, ammonia concentrations above the treatable concentration (up to 2,250 mg/l) were found in three partially treated wastewaters where there was no raw waste data available. Consequently, ammonia is selected for limitation in this subcategory.

TSS concentrations ranging from 3 to 209 mg/l were observed in the nine raw wastewater samples analyzed for this study. All three concentrations are above the 2.6 mg/l treatable concentration. In one partially treated sample, TSS was measured at 6,714 mg/l. Furthermore, most of the specific methods used to remove toxic metals do so by converting these metals to precipitates, and these toxic-metal-containing precipitates

should not be discharged. Meeting a limitation on total suspended solids helps ensure that removal of these precipitated toxic metals has been effective. For these reasons, total suspended solids are selected for limitation in this subcategory.

The 15 pH values observed during this study ranged from 0.6 to 12.0. Nine of the 15 values were equal to or less than 3.98, and three others were above the 7.0 to 10.0 range considered desirable for discharge to receiving waters. Many deleterious effects are caused by extreme pH values or rapid changes in pH. Also, effective removal of toxic metals by precipitation requires careful control of pH. Since pH control within the desirable limits is readily attainable by available treatment, pH is selected for limitation in this subcategory.

TOXIC POLLUTANTS

The frequency of occurrence of the toxic pollutants in the raw wastewater samples taken is presented in Table VI-1 (page 3057). Table VI-1 is based on the raw wastewater data from streams 64, 130, 219, 220, 221, 301, 311, and 312 (see Section V). These data provide the basis for the categorization of specific pollutants, as discussed below. Treatment plant samples were not considered in the frequency count.

TOXIC POLLUTANTS NEVER DETECTED

The toxic pollutants listed in Table VI-2 (page 3061) were not detected in any raw wastewater samples from this subcategory; therefore, they are not selected for consideration in establishing limitations.

TOXIC POLLUTANTS NEVER FOUND ABOVE THEIR ANALYTICAL QUANTIFICATION CONCENTRATION

The toxic pollutants listed below were never found above their analytical quantification concentration in any raw wastewater samples from this subcategory; therefore, they are not selected for consideration in establishing limitations.

4.	benzene	
10.	1,2-dichloroethane	
15.	1,1,2,2-tetrachloroethane	
78.	anthracene	(a)
81.	phenanthrene	(a)
84.	pyrene	
87.	trichloroethylene	
95.	alpha endosulfan	
106.	PCB-1242	(b)
107.	PCB-1254	(b)
108.	PCB-1221	(b)
109.	PCB-1232	(c)
110.	PCB-1248	(c)
111.	PCB-1260	(c)
112.	PCB-1016	(c)

(a) Reported together for three samples, as a combined value

(b), (c) Reported together, as a combined value

TOXIC POLLUTANTS PRESENT BELOW CONCENTRATIONS ACHIEVABLE BY TREATMENT

The pollutants listed below are not selected for consideration in establishing limitations because they were not found in any raw wastewater samples from this subcategory above concentrations considered achievable by existing or available treatment technologies. These pollutants are discussed individually following the list.

54. isophorone
70. diethyl phthalate
71. dimethyl phthalate
114. antimony
117. beryllium
123. mercury

Isophorone was detected in only one of the seven raw wastewater samples for which it was analyzed. This one concentration of 0.008 mg/l is well below the 0.010 mg/l concentration considered achievable by identified treatment technology. Therefore, isophorone is not selected for limitation.

Diethyl phthalate was measured in two of seven samples. Both concentrations were above its treatable concentration (0.010 mg/l). This compound is a plasticizer in many products and is not considered a pollutant specific to this subcategory. Also, in the dcp, the responding primary tungsten plants indicated that this pollutant was believed to be absent. Therefore, diethyl phthalate is not selected for limitation.

Dimethyl phthalate was detected in only one of seven samples analyzed. This one concentration is above its treatable concentration (0.010 mg/l). This compound is a plasticizer commonly used in laboratory and field sampling equipment, and is not considered a pollutant specific to this subcategory. Also, in the dcp, the responding primary tungsten plants indicated that this pollutant was believed to be absent. Therefore, dimethyl phthalate is not selected for limitation.

Antimony was found in three of 10 samples analyzed, at concentrations ranging from 0.008 mg/l to 0.035 mg/l. Since all of these are below the treatable concentration (0.47 mg/l), antimony is not selected for limitation.

Beryllium was detected in only one of the 10 raw waste samples. This one concentration of 0.03 mg/l is below the 0.20 mg/l concentration considered achievable by available treatment. Therefore, beryllium is not selected for limitation.

Mercury was found in seven of 10 samples analyzed, at concentrations ranging from 0.0002 mg/l to 0.004 mg/l. Since all of these are below the treatable concentration (0.036 mg/l), mercury is not selected for limitation.

TOXIC POLLUTANTS DETECTED IN A SMALL NUMBER OF SOURCES

The following pollutants were not selected for limitation on the basis that they were detectable in the effluent from only a small number of sources within the subcategory and are uniquely related to only those sources:

1. acenaphthene
23. chloroform
29. 1,1-dichloroethylene
38. ethylbenzene
47. bromoform
51. chlorodibromomethane
66. bis(2-ethylhexyl) phthalate
68. di-n-butyl phthalate
69. di-n-octyl phthalate
76. chrysene
77. acenaphthylene
80. fluorene
115. arsenic
120. copper
121. cyanide

Although these pollutants were not selected for limitation in establishing nationwide regulations, it may be appropriate, on a case-by-case basis, for the local permit issuing authority to specify effluent limitations.

Acenaphthene was detected in one of the five raw wastewater streams for which it was analyzed. That sample, the ion-exchange raffinate, exhibited a concentration of 0.111 mg/l, which is above the concentration attainable by treatment (0.010 mg/l). This result is site-specific since acenaphthene was not detected in any of the three samples of ion-exchange raffinate from another plant. For this reason, acenaphthene is not selected for limitation.

Chloroform was detected in six of 12 samples. Five of the samples had concentrations ranging from 0.014 to 0.036 mg/l, which are above the treatable concentration (0.010 mg/l). All six samples containing chloroform were taken from two streams at two plants. Chloroform is a common laboratory solvent and the site-specific results suggest sample contamination. Also, all primary tungsten plants responding in the dcp indicated that this pollutant was believed to be absent. Therefore, chloroform is not selected for limitation.

Concentrations of 1,1-dichloroethylene were above treatable concentration (0.010 mg/l) in only one of seven samples analyzed. The sample measured 0.019 mg/l. This site-specific result cannot

be generalized as characteristic of the entire subcategory, therefore, 1,1-dichloroethylene is not selected for limitation.

Ethylbenzene was detected in two of the 12 raw wastewater samples. Only one of these samples (0.011 mg/l) contained ethylbenzene above its analytical quantification concentration (0.010 mg/l). Because this concentration is slightly above that attainable by identified treatment technology (0.010 mg/l), ethylbenzene is not selected for limitation.

Bromoform was detected in two of 12 raw wastewater samples. The concentrations were above the treatable concentration of 0.010 mg/l, with values of 0.036 mg/l and 0.053 mg/l. Both samples were taken from ion-exchange raffinate at one plant. Bromoform was not detected in 10 other samples, including three samples of ion-exchange raffinate at a different plant from the treatable samples. Since such a small number of sources indicate that bromoform is present, bromoform is not selected for limitation.

Chlorodibromomethane was detected in only one of the 12 raw waste samples. This one concentration of 0.038 mg/l is above the 0.010 mg/l concentration considered achievable by identified treatment technology. Since only one source indicates chlorodibromomethane is present, it is not selected for limitation.

Bis(2-ethylhexyl) phthalate was found above its treatable concentration (0.010 mg/l) in three of seven samples analyzed for it. This compound is a plasticizer commonly used in laboratory and field sampling equipment, and is not used or formed as a by-product in this subcategory. Also, in the dcp, the responding primary tungsten plants indicated that this pollutant was believed to be absent. Therefore, bis(2-ethylhexyl) phthalate is not selected for limitation.

Di-n-butyl phthalate was detected above its treatable concentration (0.010 mg/l) in only one of seven samples analyzed. This compound is a plasticizer commonly used in laboratory and field sampling equipment, and is not considered a pollutant specific to this subcategory. Also, in the dcp, the responding primary tungsten plants indicated that this pollutant was believed to be absent. Therefore, di-n-butyl phthalate is not selected for limitation.

Di-n-octyl phthalate occurred above its treatable concentration (0.010 mg/l) in two of seven samples. This compound is a plasticizer used in many products and is not considered a pollutant specific to this subcategory. Also, in the dcp, the responding primary tungsten plants indicated that this pollutant was believed to be absent. Therefore, di-n-octyl phthalate is not selected for limitation.

Chrysene concentrations were above treatable concentration (0.010 mg/l) in only one of seven samples analyzed. The sample measured 0.024 mg/l. This site-specific result cannot be generalized as characteristic of the entire subcategory, therefore, chrysene is

not selected for limitation.

Acenaphthylene was detected in one of the seven raw wastewater samples analyzed. That sample, ion-exchange raffinate, exhibited a concentration of 0.112 mg/l which is above the concentration attainable by treatment (0.010 mg/l). This result is site-specific since no other ion-exchange raffinate samples were identified to contain acenaphthylene. Therefore, this compound is not selected for limitation.

Fluorene was detected in one of five raw wastewater streams. That sample, ion exchange raffinate, exhibited a concentration of 0.06 mg/l, which is above its treatable concentration (0.010 mg/l). Three samples of ion-exchange raffinate from another plant were not found to contain fluorene. This result is site-specific, so fluorene is not selected for limitation.

Arsenic was detected above its treatable concentration (0.34 mg/l) in only one of the 10 samples analyzed. The Agency has no reason to believe that treatable arsenic concentrations should be present in primary tungsten wastewaters, and it believes that this one value found at one plant is not representative of the subcategory. For these reasons, arsenic is not selected for limitation.

Copper was found at 5 mg/l in one sample, but the other nine samples analyzed contained copper at 0.25 mg/l or less, which is below its treatable concentration of 0.39 mg/l. The Agency has no reason to believe that treatable copper concentrations should be present in primary tungsten wastewaters, and it believes that this one value found at one plant is not representative of the subcategory. Thus, copper is not selected for limitation.

Cyanide was found above its treatable concentration (0.047 mg/l) in two of nine samples analyzed. The samples measured 0.055 and 0.064 mg/l. The Agency has no reason to believe that treatable cyanide concentrations should be present in primary tungsten wastewaters, and it believes that these two values are not representative of the subcategory. For these reasons, cyanide is not selected for limitation.

TOXIC POLLUTANTS SELECTED FOR FURTHER CONSIDERATION IN ESTABLISHING LIMITATIONS AND STANDARDS

The toxic pollutants listed below are selected for further consideration in establishing limitations and standards for this subcategory. The toxic pollutants selected for further consideration for limitation are each discussed following the list.

11. 1,1,1-trichloroethane
55. naphthalene
65. phenol
73. benzo(a)pyrene
79. benzo(ghi)perylene

82. dibenzo(a,h)anthracene
85. tetrachloroethylene
86. toluene
118. cadmium
119. chromium
122. lead
124. nickel
126. silver
127. thallium
128. zinc

1,1,1-Trichloroethane was measured above its treatable concentration (0.010 mg/l) in one of the five raw wastewater streams for which it was analyzed. That sample, synthetic scheelite filtrate, exhibited a concentration of 0.02 mg/l. Since this waste stream may contain toxic organic pollutants, 1,1,1-trichloroethane is selected for further consideration for limitation.

Naphthalene was found in four of the five raw wastewater streams analyzed. Two of these four streams are from ion-exchange raffinate and one is from synthetic scheelite filtrate, both of which are expected to contain toxic organic pollutants. Two of seven samples from the five wastewater streams have naphthalene concentrations above its treatable concentration (0.010 mg/l). For these reasons, naphthalene is selected for further consideration for limitation.

Phenol was measured above its treatable concentration (0.010 mg/l) in four of seven samples with concentrations ranging from 0.0654 to 0.118 mg/l. The treatable concentrations were found in ion-exchange raffinate and synthetic scheelite filtrate, both of which may contain toxic organic pollutants because of the organic solvents used.

Benzo(a)pyrene was detected above its treatable concentration (0.010 mg/l) in one of the five raw wastewater streams for which it was sampled. That sample, synthetic scheelite filtrate, exhibited a concentration of 0.120 mg/l. Since this stream may contain toxic organic pollutants, benzo(a)pyrene is selected for further consideration for limitation.

Benzo(ghi)perylene was detected above its treatable concentration (0.010 mg/l) in one of five raw wastewater streams sampled. That sample, synthetic scheelite filtrate, exhibited a concentration of 0.139 mg/l. Since this stream may contain toxic organic pollutants, benzo(ghi)perylene is selected for further consideration for limitation.

Dibenzo(a,h)anthracene was measured above its treatable concentration (0.010 mg/l) in one of five raw wastewater streams. A concentration of 0.108 was found in a synthetic scheelite filtrate sample. Since this stream may contain toxic organic pollutants, dibenzo(a,h)anthracene is selected for further consideration for limitation.

Tetrachloroethylene was detected in eight of the 12 raw waste samples. Three of these samples have tetrachloroethylene concentrations above its treatable concentration (0.010 mg/l). Two of the three samples are from the ion-exchange raffinate. This stream may contain toxic organic pollutants because of the organic solvent used. For these reasons, this compound is selected for further consideration for limitation.

Toluene was found in five of the 12 raw waste sample of which two of the concentrations are above its treatable concentration (0.010 mg/l). These two samples are from the ion-exchange raffinate which may contain toxic organic pollutants because of the organic solvent used. For these reasons, toluene is selected for further consideration for limitation.

Cadmium was detected above its treatable concentration (0.049 mg/l) in one of eight raw wastewater streams sampled. The treatable concentration was detected in tungstic acid rinse water, which may contain cadmium from the ore concentrates. Therefore, cadmium is selected for further consideration for limitation.

Chromium was detected above its treatable concentration of 0.07 mg/l in both tungstic acid rinse water samples before treatment. The highest concentration was 2.0 mg/l. One sample from a third stream indicated that chromium was present at a concentration quantifiable but below the treatable concentration. Therefore, chromium is selected for further consideration for limitation.

Lead was detected in one raw waste stream at a concentration of 20.0 mg/l which is well above the 0.08 mg/l attainable by identified treatment technology. This concentration was observed in tungstic acid rinse water which may contain toxic metals from ore concentrates. Although no raw waste data is available, sampling data at a second plant indicated that lead concentrations above the treatable concentration were present in the treated wastewater. For these reasons, lead is selected for further consideration for limitation.

Nickel was found in one raw waste stream at a concentration of 1.0 mg/l which is above the 0.22 mg/l attainable by identified treatment technology. This concentration was observed in tungstic acid rinse water which may contain toxic metals from ore concentrates. Therefore, nickel is selected for further consideration for limitation.

Silver was detected in five of ten wastewater samples. Two of the samples contained concentrations of 0.1 and 0.29 mg/l, which can be treated to the 0.07 mg/l attainable by identified treatment technology. Therefore, silver is selected for further consideration for limitation.

Thallium was detected in one of the eight raw wastewater streams sampled at a concentration above its treatable concentration of 0.34 mg/l. The treatable concentration was observed in raw tungstic acid rinse water at 0.70 mg/l. Therefore, thallium is selected for further consideration for limitation.

Zinc was detected in four of the ten samples for which it was analyzed above its treatable concentration of 0.23 mg/l. The highest concentration found was 2.0 mg/l. Treated wastewater sampling data from one plant also indicated that concentrations above treatability remained even after lime and settle treatment had been applied to a stream. Accordingly, zinc is selected for further consideration for limitation.

Table VI-1

FREQUENCY OF OCCURRENCE OF TOXIC POLLUTANTS
PRIMARY TUNGSTEN
RAW WASTEWATER

Pollutant	Analytical Quantification Concentration (mg/l) (a)	Treatable Concentration (mg/l) (b)	Number of Streams Analyzed	Number of Samples Analyzed	Not Detected	Detected Below Quantification Concentration	Detected Below Treatable Concentration	Detected Above Treatable Concentration
1. acenaphthene	0.010	0.010	5	7	6	0	0	1
2. acrolein	0.010	0.010	5	12	12	0	0	0
3. acrylonitrile	0.010	0.010	5	12	12	0	0	0
4. benzene	0.010	0.010	5	12	6	6	0	0
5. benzidine	0.010	0.010	5	7	7	0	0	0
6. carbon tetrachloride	0.010	0.010	5	12	12	0	0	0
7. chlorobenzene	0.010	0.010	5	12	12	0	0	0
8. 1,2,4-trichlorobenzene	0.010	0.010	5	7	7	0	0	0
9. hexachlorobenzene	0.010	0.010	5	7	7	0	0	0
10. 1,2-dichloroethane	0.010	0.010	5	12	10	2	0	0
11. 1,1,1-trichloroethane	0.010	0.010	5	12	11	0	0	1
12. hexachloroethane	0.010	0.010	5	7	7	0	0	0
13. 1,1-dichloroethane	0.010	0.010	5	12	12	0	0	0
14. 1,1,2-trichloroethane	0.010	0.010	5	12	12	0	0	0
15. 1,1,2,2-tetrachloroethane	0.010	0.010	5	12	8	4	0	0
16. chloroethane	0.010	0.010	5	12	12	0	0	0
17. bis(chloromethyl) ether	0.010	0.010	5	12	12	0	0	0
18. bis(2-chloroethyl) ether	0.010	0.010	5	7	7	0	0	0
19. 2-chloroethyl vinyl ether	0.010	0.010	5	12	12	0	0	0
20. 2-chloronaphthalene	0.010	0.010	5	7	7	0	0	0
21. 2,4,6-trichlorophenol	0.010	0.010	5	7	7	0	0	0
22. parachlorometa cresol	0.010	0.010	5	7	7	0	0	0
23. chloroform	0.010	0.010	5	12	6	1	0	5
24. 2-chlorophenol	0.010	0.010	5	7	7	0	0	0
25. 1,2-dichlorobenzene	0.010	0.010	5	7	7	0	0	0
26. 1,3-dichlorobenzene	0.010	0.010	5	7	7	0	0	0
27. 1,4-dichlorobenzene	0.010	0.010	5	7	7	0	0	0
28. 3,3'-dichlorobenzidine	0.010	0.010	5	7	7	0	0	0
29. 1,1-dichloroethylene	0.010	0.010	5	12	11	0	0	1
30. 1,2-trans-dichloroethylene	0.010	0.010	5	12	12	0	0	0
31. 2,4-dichlorophenol	0.010	0.010	5	7	7	0	0	0
32. 1,2-dichloropropane	0.010	0.010	5	12	12	0	0	0
33. 1,3-dichloropropylene	0.010	0.010	5	12	12	0	0	0
34. 2,4-dimethylphenol	0.010	0.010	5	7	7	0	0	0
35. 2,4-dinitrotoluene	0.010	0.010	5	7	7	0	0	0
36. 2,6-dinitrotoluene	0.010	0.010	5	7	7	0	0	0
37. 1,2-diphenylhydrazine	0.010	0.010	5	7	7	0	0	0

Table VI-1 (Continued)

FREQUENCY OF OCCURRENCE OF TOXIC POLLUTANTS
PRIMARY TUNGSTEN
RAW WASTEWATER

Pollutant	Analytical Quantification Concentration (mg/l) (a)	Treatable Concentration (mg/l) (b)	Number of Streams Analyzed	Number of Samples Analyzed	Not Detected	Detected Below Quantification Concentration	Detected Below Treatable Concentration	Detected Above Treatable Concentration
38. ethylbenzene	0.010	0.010	5	12	10	1	0	1
39. fluoranthene	0.010	0.010	5	7	7	0	0	0
40. 4-chlorophenyl phenyl ether	0.010	0.010	5	7	7	0	0	0
41. 4-bromophenyl phenyl ether	0.010	0.010	5	7	7	0	0	0
42. bis(2-chloroisopropyl) ether	0.010	0.010	5	7	7	0	0	0
43. bis(2-chloroethoxy) methane	0.010	0.010	5	7	7	0	0	0
44. methylene chloride	0.010	0.010	5	12	12	0	0	0
45. methyl chloride	0.010	0.010	5	12	12	0	0	0
46. methyl bromide	0.010	0.010	5	12	12	0	0	0
47. bromoform	0.010	0.010	5	12	10	0	0	2
48. dichlorobromomethane	0.010	0.010	5	12	12	0	0	0
49. trichlorofluoromethane	0.010	0.010	5	12	12	0	0	0
50. dichlorodifluoromethane	0.010	0.010	5	12	12	0	0	0
51. chlorodibromomethane	0.010	0.010	5	12	11	0	0	1
52. hexachlorobutadiene	0.010	0.010	5	7	7	0	0	0
53. hexachlorocyclopentadiene	0.010	0.010	5	7	7	0	0	0
54. isophorone	0.010	0.010	5	7	6	0	1	0
55. naphthalene	0.010	0.010	5	7	1	1	3	2
56. nitrobenzene	0.010	0.010	5	7	7	0	0	0
57. 2-nitrophenol	0.010	0.010	5	7	7	0	0	0
58. 4-nitrophenol	0.010	0.010	5	7	7	0	0	0
59. 2,4-dinitrophenol	0.010	0.010	5	7	7	0	0	0
60. 4,6-dinitro-o-cresol	0.010	0.010	5	7	7	0	0	0
61. N-nitrosodimethylamine	0.010	0.010	5	7	7	0	0	0
62. N-nitrosodiphenylamine	0.010	0.010	5	7	7	0	0	0
63. N-nitrosodi-n-propylamine	0.010	0.010	5	7	7	0	0	0
64. pentachlorophenol	0.010	0.010	5	7	7	0	0	0
65. phenol	0.010	0.010	5	7	3	0	0	4
66. bis(2-ethylhexyl) phthalate	0.010	0.010	5	7	1	1	2	3
67. butyl benzyl phthalate	0.010	0.010	5	7	7	0	0	0
68. di-n-butyl phthalate	0.010	0.010	5	7	3	0	3	1
69. di-n-octyl phthalate	0.010	0.010	5	7	4	0	1	2
70. diethyl phthalate	0.010	0.010	5	7	5	0	2	0
71. dimethyl phthalate	0.010	0.010	5	7	6	0	1	0
72. benzo(a)anthracene	0.010	0.010	5	7	7	0	0	0
73. benzo(a)pyrene	0.010	0.010	5	7	6	0	0	1
74. 3,4-benzofluoranthene	0.010	0.010	5	7	7	0	0	0

Table VI-1 (Continued)

FREQUENCY OF OCCURRENCE OF TOXIC POLLUTANTS
PRIMARY TUNGSTEN
RAW WASTEWATER

Pollutant	Analytical Quantification Concentration (mg/l) (a)	Treatable Concentration (mg/l) (b)	Number of Streams Analyzed	Number of Samples Analyzed	Not Detected	Detected Below Quantification Concentration	Detected Below Treatable Concentration	Detected Above Treatable Concentration
75. benzo(k)fluoranthene	0.010	0.010	5	7	7	0	0	0
76. chrysene	0.010	0.010	5	7	6	0	0	1
77. acenaphthylene	0.010	0.010	5	7	6	0	0	1
78. anthracene (c)	0.010	0.010	5	7	5	2	0	0
79. benzo(ghi)perylene	0.010	0.010	5	7	6	0	0	1
80. fluorene	0.010	0.010	5	7	5	1	0	1
81. phenanthrene (c)	0.010	0.010	5	7	5	2	0	0
82. dibenzo(a,h)anthracene	0.010	0.010	5	7	6	0	0	1
83. indeno(1,2,3-cd)pyrene	0.010	0.010	5	7	7	0	0	0
84. pyrene	0.010	0.010	5	7	6	1	0	0
85. tetrachloroethylene	0.010	0.010	5	12	4	5	0	3
86. toluene	0.010	0.010	5	12	6	3	1	2
87. trichloroethylene	0.010	0.010	5	12	7	5	0	0
88. vinyl chloride	0.010	0.010	5	12	12	0	0	0
89. aldrin	0.005	0.010	3	3	3	0	0	0
90. dieldrin	0.005	0.010	3	3	3	0	0	0
91. chlordane	0.005	0.010	3	3	3	0	0	0
92. 4,4'-DDT	0.005	0.010	3	3	3	0	0	0
93. 4,4'-DDE	0.005	0.010	3	3	3	0	0	0
94. 4,4'-DDD	0.005	0.010	3	3	3	0	0	0
95. alpha-endosulfan	0.005	0.010	3	3	3	1	0	0
96. beta-endosulfan	0.005	0.010	3	3	3	0	0	0
97. endosulfan sulfate	0.005	0.010	3	3	3	0	0	0
98. endrin	0.005	0.010	3	3	3	0	0	0
99. endrin aldehyde	0.005	0.010	3	3	3	0	0	0
100. heptachlor	0.005	0.010	3	3	3	0	0	0
101. heptachlor epoxide	0.005	0.010	3	3	3	0	0	0
102. alpha-BHC	0.005	0.010	3	3	3	0	0	0
103. beta-BHC	0.005	0.010	3	3	3	0	0	0
104. gamma-BHC	0.005	0.010	3	3	3	0	0	0
105. delta-BHC	0.005	0.010	3	3	3	0	0	0
106. PCB-1242 (d)	0.005	0.010	3	3	1	2	0	0
107. PCB-1254 (d)	0.005	0.010	3	3	1	2	0	0
108. PCB-1221 (d)	0.005	0.010	3	3	1	2	0	0
109. PCB-1232 (e)	0.005	0.010	3	3	1	2	0	0
110. PCB-1248 (e)	0.005	0.010	3	3	1	2	0	0
111. PCB-1260 (e)	0.005	0.010	3	3	1	2	0	0
112. PCB-1016 (e)	0.005	0.010	3	3	1	2	0	0

Table VI-1 (Continued)

FREQUENCY OF OCCURRENCE OF TOXIC POLLUTANTS
PRIMARY TUNGSTEN
RAW WASTEWATER

Pollutant	Analytical Quantification Concentration (mg/l) (a)	Treatable Concentration (mg/l) (b)	Number of Streams Analyzed	Number of Samples Analyzed	Not Detected	Detected Below Quantification Concentration	Detected Below Treatable Concentration	Detected Above Treatable Concentration
113. toxaphene	0.005	0.010	3	3	3	0	0	0
114. antimony	0.100	0.470	8	10	7	0	3	0
115. arsenic	0.010	0.340	8	10	4	0	5	1
116. asbestos	10 MFL	10 MFL	2	4	4			
117. beryllium	0.010	0.200	8	10	9	0	1	0
118. cadmium	0.002	0.049	8	10	8	0	1	1
119. chromium	0.005	0.070	8	10	7	0	1	2
120. copper	0.009	0.390	8	10	4	0	5	1
121. cyanide	0.02(f)	0.047	5	9	1	0	6	2
122. lead	0.020	0.080	8	10	9	0	0	1
123. mercury	0.0001	0.036	8	10	3	0	7	0
124. nickel	0.005	0.220	8	10	9	0	0	1
125. selenium	0.01	0.200	8	10	10	0	0	0
126. silver	0.02	0.070	8	10	5	0	3	2
127. thallium	0.100	0.340	8	10	9	0	0	1
128. zinc	0.050	0.230	8	10	4	0	2	4
129. 2,3,7,8-tetrachlorodibenzo-p-dioxin (TCDD)	0.005	Not Analyzed						

(a) Analytical quantification concentration was reported with the data (see Section V).

(b) Treatable concentrations are based on performance of lime precipitation, sedimentation, and filtration for toxic metal pollutants and activated carbon adsorption for toxic organic pollutants.

(c) Reported together for three samples.

(d),(e) Reported together.

(f) Analytical quantification concentration for EPA Method 335.2, Total Cyanide Methods for Chemical Analysis of Water and Wastes, EPA-600/4-79-020, March 1979.

TABLE VI-2

TOXIC POLLUTANTS NEVER DETECTED

2. acrolein
3. acrylonitrile
5. benzidine
6. carbon tetrachloride
7. chlorobenzene
8. 1,2,4-trichlorobenzene
9. hexachlorobenzene
12. hexachloroethane
13. 1,1-dichloroethane
14. 1,1,2-trichloroethane
16. chloroethane
17. DELETED
18. bis(2-chloroethyl) ether
19. 2-chloroethyl vinyl ether
20. 2-chloronaphthalene
21. 2,4,6-trichlorophenol
22. parachlorometa cresol
24. 2-chlorophenol
25. 1,2-dichlorobenzene
26. 1,3-dichlorobenzene
27. 1,4-dichlorobenzene
28. 3,3'-dichlorobenzidine
30. 1,2-trans-dichloroethylene
31. 2,4-dichlorophenol
32. 1,2-dichloropropane
33. 1,3-dichloropropylene
34. 2,4-dimethylphenol
35. 2,4-dinitrotoluene
36. 2,6-dinitrotoluene
37. 1,2-diphenylhydrazine
39. fluoranthene
40. 4-chlorophenyl phenyl ether
41. 4-bromophenyl phenyl ether
42. bis(2-chloroisopropyl)ether
43. bis(2-chloroethoxy)methane
44. methylene chloride
45. methyl chloride (chloromethane)
46. methyl bromide (bromomethane)
48. dichlorobromomethane
49. DELETED
50. DELETED
52. hexachlorobutadiene
53. hexachlorocyclopentadiene
56. nitrobenzene
57. 2-nitrophenol
58. 4-nitrophenol
59. 2,4-dinitrophenol

TABLE VI-2 (Continued)

TOXIC POLLUTANTS NEVER DETECTED

60. 4,6-dinitro-o-cresol
61. N-nitrosodimethylamine
62. N-nitrosodiphenylamine
63. N-nitrosodi-n-propylamine
64. pentachlorophenol
67. butyl benzyl phthalate
72. benzo(a)anthracene
74. 3,4-benzofluoranthene
75. benzo(k)fluoranthene
83. indeno (1,2,3-cd)pyrene
88. vinyl chloride
89. aldrin
90. dieldrin
91. chlordane
92. 4,4'-DDT
93. 4,4'-DDE
94. 4,4'-DDD
96. beta-endosulfan
97. endosulfan sulfate
98. endrin
99. endrin aldehyde
100. heptachlor
101. heptachlor epoxide
102. alpha-BHC
103. beta-BHC
104. gamma-BHC
105. delta-BHC
113. toxaphene
116. asbestos
125. selenium
129. 2,3,7,8-tetrachlorodibenzo-p-dioxin (TCDD)

SECTION VII

CONTROL AND TREATMENT TECHNOLOGIES

The preceding sections of this supplement discussed the sources, flows, and characteristics of the wastewaters from primary tungsten plants. This section summarizes the description of these wastewaters,indicates the treatment technologies which are currently practiced in the primary tungsten subcategory for each wastewater stream and presents the control and treatment technology options which were examined by the Agency for possible application to the primary tungsten subcategory.

CURRENT CONTROL AND TREATMENT PRACTICES

Wastewater associated with the primary tungsten subcategory is characterized by the presence of the toxic metal pollutants and suspended solids. This analysis is supported by the raw (untreated) wastewater data presented for specific sources as well as combined wastewater streams in Section V. Generally, these pollutants are present in each of the streams at treatable concentrations, so these wastewaters are commonly combined for treatment. Construction of one wastewater treatment system for combined treatment allows plants to take advantage of economic scale and in some instances to combine streams of different alkalinity to reduce treatment chemical requirements. Four plants in this subcategory currently have lime precipitation and sedimentation treatment. Three of these plants operate this treatment on combined wastewater. No plants in the subcategory currently operate lime, settle, and filter treatment. As such, three options have been selected for consideration for BPT, BAT, and BDT, and pretreatment based on combined treatment of these compatible waste streams.

TUNGSTIC ACID RINSE WATER

Tungstic acid is prepared by leaching ore concentrates with hydrochloric acid and then rinsing the insoluble tungsten acid with water. The two plants using this process practice lime and settle treatment to precipitate metals before discharging the rinse water. A third plant which produces a tungsten acid intermediate by reacting HCl with sodium tungstate neutralizes the rinse water along with other wastes and then coagulates with polymers and practices sedimentation.

ACID LEACH WET AIR POLLUTION CONTROL

Plants that acid leach use wet scrubbing systems for the control of hydrochloric acid fumes. One plant discharges this acidic wastewater after lime and settle treatment while a second recycles the entire stream for use as tungsten acid rinse water.

ALKALI LEACH WASH

The four plants which use an alkali ore leaching process, such as caustic digestion or a soda autoclave, generate a waste from the decant washing of the sodium tungstate intermediate. None of the plants discharge this waste stream. Two plants have reduced this flow to zero by filtering the insoluble impurities and using a combination of evaporation and recycle. Two plants discharge this and all other wastes to a settling pond where the water either evaporates or percolates into the ground.

MOLYBDENUM SULFIDE PRECIPITATION WET AIR POLLUTION CONTROL

Two plants use wet air pollution scrubbers on precipitation steps that remove molybdenum impurities from sodium tungstate solution. Neither plant discharges this wastewater. Both plants recycle the spent scrubber liquor back to the process to recover any tungsten captured.

ION-EXCHANGE RAFFINATE (COMMINGLED AND NOT COMMINGLED WITH OTHER PROCESS AND NONPROCESS STREAMS)

When a liquid ion-exchange process is used to convert sodium tungstate to ammonium tungstate, a raffinate stream is generated. Of the four plants which utilize this process, one is a zero discharge plant because it pumps all of its wastes, including the ion-exchange raffinate, to a settling pond where the water evaporates. Two plants, direct dischargers, treat this wastewater with a lime and settle process; one of these plants also adds polymer as a coagulant. The third plant recycles 50 percent of its wash water and discharges the remainder along with the raffinate to an evaporation pond.

CALCIUM TUNGSTATE PRECIPITATION WASH

Calcium tungstate, also referred to as synthetic scheelite, is precipitated when sodium tungstate crystals are dissolved and then reacted with calcium chloride solution. The precipitated crystals are allowed to settle, and the waste sodium chloride supernatant can be decanted or the precipitate recovered by filtration. Some plants also wash the precipitate. Of the six plants which precipitate calcium tungstate, two have achieved zero discharge status. These plants discharge all the wastes to settling ponds. Three plants treat this wash water. Two use lime and settle, and the third adds coagulation with polymers to a lime and settle treatment. The sixth plant discharges this waste without treatment.

CRYSTALLIZATION AND DRYING OF AMMONIUM PARATUNGSTATE

Ammonium paratungstate crystals are precipitated from a mother liquor which will contain ammonia and possibly tungsten. For this reason, three plants completely recycle and reprocess the filtrate after recovering the ammonia for reuse. One plant currently discharges the mother liquor to central lime and settle

treatment. If heating is used to dry the crystals, a baghouse is used to contain particulates while the water vapor is evaporated to the atmosphere. A fifth plant recycles and reuses some of this scrubber water, but discharges the majority of it to an evaporation pond.

AMMONIUM PARATUNGSTATE CONVERSION TO OXIDES WET AIR POLLUTION CONTROL

When ammonium paratungstate (APT) is converted to tungsten oxides (WO_x), ammonia is evolved. Most plants use a wet scrubbing system to contain the fumes, and some use an ammonia recovery system. Of the six plants which reported using this process and generating a waste stream, one has reduced the flow to zero. This is accomplished by recycle to a cooling tower and reuse. The following treatment schemes are currently in place in the rest of the subcategory:

1. No treatment of scrubber water, direct discharge - one plant;

2. No treatment of scrubber water, indirect discharge - two plants;

3. Lime and settle treatment of scrubber water with polymer addition; and

4. Off-gases run through bubbling tank, fine particles of tungsten material settle out, overflow from settling tanks is indirectly discharged - one plant.

AMMONIUM PARATUNGSTATE CONVERSION TO OXIDES WATER OF FORMATION

The conversion of APT to oxides generates water of formation. In some plants this water is recondensed in the APT conversion to oxides scrubber system. Two plants condense this water in a recovery system for the reduction furnace atmospheric gas. One plant collects the water in drums and has it contract hauled. The other plant evaporates 100 percent to the atmosphere.

REDUCTION TO TUNGSTEN WET AIR POLLUTION CONTROL

Tungsten oxides (WO_x) are reduced to tungsten metal in rotary reduction furnaces, usually under a hydrogen atmosphere. Seven plants report using a wet scrubbing system to control particulate emissions from these furnaces. The following treatment schemes are currently in place:

1. No treatment of scrubber water, direct discharge - one plant;

2. No treatment of scrubber water, indirect discharge - two plants;

3. Lime and settle treatment with polymer addition - one

plant;

4. 100 percent recycle with cooling tower - two plants; and

5. 100 percent recycle with holding tank - one plant.

REDUCTION TO TUNGSTEN WATER OF FORMATION

Plants that reduce oxides to tungsten metal in a hydrogen atmosphere may generate a water of formation as generalized by the following reaction:

$$WO_x + H_2 \rightarrow W + H_2O$$

The following treatment schemes are currently in place:

1. No treatment, direct discharger - three plants;

2. No treatment, indirect discharger - one plant;

3. 100 percent evaporation or reuse - one plant; and

4. Settle in sump, tungsten solids returned to furnace, indirect discharger - one plant.

TUNGSTEN POWDER LEACH AND WASH

Two plants leach the tungsten powder product with acid to produce a higher purity product. The wastewater consists of spent acid and wash water. One plant neutralizes this wastewater with soda ash, settles the solids for drying and recycle, and discharges to a POTW. The other plant discharges this waste stream to a POTW without treatment.

CONTROL AND TREATMENT OPTIONS

The Agency examined three control and treatment technology options between proposal and promulgation that are applicable to the primary tungsten subcategory. The options selected for evaluation represent a combination of in-process flow reduction, preliminary treatment technologies applicable to individual waste streams, and end-of-pipe treatment technologies. The effectiveness of these technologies is presented in Section VII of Vol. I.

Examination of the raw wastewater data does not show any arsenic or selenium at or above treatable concentrations. Also, these pollutants are not characteristic of the raw materials and processing agents used in this subcategory. Therefore, Option D, which includes activated aluminum adsorption, was not considered as an appropriate treatment technology for this subcategory.

OPTION A

Option A for the primary tungsten subcategory requires control

and treatment technologies to reduce the discharge of wastewater volume and pollutant mass.

The Option A treatment scheme consists of chemical precipitation and sedimentation technology. Specifically, lime or some other alkaline compound is used to precipitate toxic metal ions as metal hydroxides. The metal hydroxides and suspended solids settle out and the sludge is collected. Vacuum filtration is used to dewater sludge.

Preliminary treatment consisting of ammonia steam stripping for waste streams containing treatable concentrations of ammonia is also included in Option A. Steam stripping is an efficient method for reducing the ammonia concentrations, as well as for recovering ammonia as a by-product. Steam stripping also prevents the transfer of ammonia to the air.

Oil skimming is added as a preliminary step to remove oil and grease from calcium tungstate (synthetic scheelite) precipitate wash.

OPTION B

Option B for the primary tungsten subcategory consists of the Option A (ammonia steam stripping, oil skimming, lime precipitation and sedimentation) treatment scheme plus flow reduction techniques to reduce the discharge of wastewater volume. In-process changes which allow for water recycle and reuse are the principal control mechanisms for flow reduction.

OPTION C

Option C for the primary tungsten subcategory consists of all control and treatment requirements of Option B (in-process flow reduction, ammonia steam stripping, oil skimming, lime precipitation and sedimentation) plus multimedia filtration technology added at the end of the Option B treatment scheme. Multimedia filtration is used to remove suspended solids, including precipitates of metals, beyond the concentration attainable by gravity sedimentation. The filter suggested is of the gravity, mixed-media type, although other forms of filters, such as rapid sand filters or pressure filters would perform satisfactorily. The addition of filters also provides consistent removal during periods of time in which there are rapid increases in flows or loadings of pollutants to the treatment system.

LIMITATIONS TO TREATMENT OPTIONS

Streams with sulfate concentrations exceeding 1000 mg/l may interfere with stream stripping performance by plugging the stripper column. This may necessitate more frequent column cleaning and downtime than the Agency anticipated in the promulgated rule. As a result, the treatment effectiveness concentrations for ammonia presented in Section VII of Vol. I may not be achievable for the high sulfate waste streams in the

primary tungsten subcategory. The only wastewater stream in the primary tungsten subcategory which is expected to have the high sulfate concentration is the ion exchange raffinate. The ramifications of this are discussed in Section 10 of this document.

CONTROL AND TREATMENT OPTIONS REJECTED

Two additional control and treatment options were considered prior to proposing effluent limitations for this subcategory. Activated carbon adsorption technology is not necessary since toxic organic pollutants are not limited in this subcategory (see discussion on regulated pollutant parameters in Section X). Reverse osmosis technology was rejected because it is not demonstrated in the nonferrous metals manufacturing category, nor is it clearly transferable.

OPTION E

Option E for the primary tungsten subcategory consists of Option C (in-process flow reduction, ammonia steam stripping, oil skimming, lime precipitation and sedimentation) with the addition of granular activated carbon technology at the end of the Option C treatment scheme. The activated carbon process is utilized to control the discharge of toxic organics.

OPTION F

Option F for the primary tungsten subcategory consists of all of the control and treatment requirements of Option C (in-process flow reduction, ammonia steam stripping, oil skimming, lime precipitation and sedimentation) plus reverse osmosis and multiple-effect evaporation technology added at the end of the Option C treatment scheme. Reverse osmosis is provided for the complete recycle of the treated water by controlling the concentration of dissolved solids concentrations. Multiple-effect evaporation is used to dewater brines rejected from reverse osmosis.

SECTION VIII

COSTS, ENERGY, AND NONWATER QUALITY ASPECTS

This section describes the method used to develop the costs associated with the control and treatment technologies of Options A, B, and C discussed in Section VII for wastewaters from primary tungsten plants. Plant-by-plant compliance costs for these options were revised following proposal. These revisions calculate incremental costs, above treatment already in place, necessary to comply with these effluent limitations and standards. The energy requirements of the considered options as well as solid waste, and air pollution aspects are also discussed.

TREATMENT OPTIONS COSTED FOR EXISTING SOURCES

Three treatment options have been considered for existing primary tungsten sources. The options are summarized below and schematically presented in Figures X-1 through X-3 (pages 3119-3121).

OPTION A

Option A consists of preliminary ammonia steam stripping treatment and lime precipitation and sedimentation end-of-pipe technology. Oil skimming is added as a preliminary step to remove oil and grease from calcium tungstate (synthetic scheelite) precipitate wash.

OPTION B

Option B consists of in-process flow reduction measures, preliminary ammonia steam stripping and oil skimming treatment, and lime precipitation and sedimentation end-of-pipe technology. The in-process flow reduction measure consists of the recycle of acid leach scrubber water, APT conversion to oxides scrubber water, and reduction to tungsten scrubber water through holding tanks.

OPTION C

Option C requires the in-process flow reduction measures of Option B, preliminary ammonia steam stripping and oil skimming treatment, and end-of-pipe treatment technology consisting of lime precipitation, sedimentation, and multimedia filtration.

Cost Methodology

A detailed discussion of the methodology and the major assumptions used to develop the compliance costs is presented in Section VIII of Vol. I. However, each subcategory contains a unique set of waste streams requiring certain subcategory-

specific assumptions to develop compliance costs. Six major assumptions are discussed briefly below. A comparison of the costs developed for proposal and the revised costs for the final regulation are presented in Tables VIII-1 and VIII-2 (page 3073) for the direct and indirect dischargers, respectively.

(1) For ammonia steam stripping, the design value for pH is 11.5 and the design effluent concentration of ammonia is 32.0 mg/l.

(2) Ammonia steam stripping requirements may exceed the excess steam generation capacity at any given plant. Therefore, a steam generation unit is included in the steam stripping costs.

(3) The lime dosage to the ammonia steam stripping process is based on the influent pH and the concentration of ammonia.

(4) Costs for plants discharging less than 50 gallons per week of total flow are based on contract hauling of the entire discharge.

(5) Costs for ammonia removal for streams with flow rates below 50 liters per hour (none of which are air pollution streams) are estimated using an air stripping system. Ammonia steam stripping is not considered feasible due to insufficient hydraulic loading in the stripping column (given the minimum column diameter of 2 feet used in cost estimation). The chemical precipitation tank is used for the air stripping operation. Chemical precipitation is always operated in the "low flow" batch treatment mode with a five day holdup due to the low flow rate . An air sparger is incorporated into the reactor tank. The influent is sparged while the tank fills with wastewater, i.e., over the entire five day holdup period. A hood is placed over the tank to capture any ammonia-laden vapors.

Direct capital costs for the ammonia air stripping system include a blower, a sparger system, and a ventilation hood. Direct annual costs are assumed to consist solely of blower operation and maintenance costs. These are assumed to be 5 percent of the blower capital cost.

(6) Recycle of air pollution control scrubber liquor is based on recycle through holding tanks. Annual costs associated with maintenance and sludge disposal are included in the estimated compliance costs. If a plant currently recycles scrubber liquor, capital costs of the recycle equipment (piping and holding

tanks) were not included in the compliance costs.

NONWATER QUALITY ASPECTS

Nonwater quality impacts specific to the primary tungsten subcategory, including energy requirements, solid waste and air pollution are discussed below.

ENERGY REQUIREMENTS

The methodology used for determining the energy requirements for the various options is discussed in Section VIII of the General Development Document. Energy requirements for the three options considered are estimated at 6.32 mwh/yr, 5.48 mwh/yr and 5.55 mwh/yr for Options A, B, and C respectively. Option B energy requirements decrease over those for Option A because less water is being treated, thus saving energy costs for lime and settle treatment. Option C represents roughly one percent of a typical plant's electrical usage. It is therefore concluded that the energy requirements of the treatment options considered will have no significant impact on total plant energy consumption. Option C, which includes filtration, is estimated to increase energy consumption over Option B by approximately 1 percent.

SOLID WASTE

Sludge generated in the primary tungsten subcategory is due to the precipitation of metal hydroxides and carbonates using lime. Sludges associated with the primary tungsten subcategory will necessarily contain additional quantities (and concentrations) of toxic metal pollutants. Wastes generated by primary smelters and refiners are currently exempt from regulation by Act of Congress (Resource Conservation and Recovery Act (RCRA), Section 3001(b)), as interpreted by EPA. Consequently, sludges generated from treating primary industries' wastewater are not presently subject to regulation as hazardous wastes. If a small excess (5-10%) of lime is added during treatment, the Agency does not believe these sludges would be identified as hazardous under RCRA in any case. (Compliance costs include this amount of lime.)

Although it is the Agency's view that solid wastes generated as a result of these guidelines are not expected to be hazardous, generators of these wastes must test the waste to determine if the wastes meet any of the characteristics of hazardous waste (see 40 CFR 262.11).

If these wastes should be identified or are listed as hazardous, they will come within the scope of RCRA's "cradle to grave" hazardous waste management program, requiring regulation from the point of generation to point of final disposition. EPA's generator standards would require generators of hazardous nonferrous metals manufacturing wastes to meet containerization, labeling, recordkeeping, and reporting requirements; if plants dispose of hazardous wastes off-site, they would have to prepare a manifest which would track the movement of the wastes from the

generator's premises to a permitted off-site treatment, storage, or disposal facility. See 40 CFR 262.20 45 FR 33142 (May 19, 1980), as amended at 45 FR 86973 (December 31, 1980). The transporter regulations require transporters of hazardous wastes to comply with the manifest system to assure that the wastes are delivered to a permitted facility. See 40 CFR 263.20 45 FR 33151 (May 19, 1980), as amended at 45 FR 86973 (December 31, 1980). Finally, RCRA regulations establish standards for hazardous waste treatment, storage, and disposal facilities allowed to receive such wastes. See 40 CFR Part 464 46 FR 2802 (January 12, 1981), 47 FR 32274 (July 26, 1982).

Even if these wastes are not identified as hazardous, they still must be disposed of in compliance with the Subtitle D open dumping standards, implementing 4004 of RCRA. See 44 FR 53438 (September 13, 1979). The Agency has calculated as part of the costs for wastewater treatment the cost of hauling and disposing of these wastes. For more details, see Section VIII of the General Development Document. EPA estimates that implementation of lime, settle, and filter technology will produce approximately 1,212 tons per year of sludge at 20 percent solids. Multimedia filtration technology will not result in any significant amount of sludge over that generated from lime precipitation.

AIR POLLUTION

There is no reason to believe that any substantial air pollution problems will result from implementation of ammonia steam stripping, chemical precipitation, sedimentation, and multimedia filtration. These technologies transfer pollutants to solid waste and are not likely to transfer pollutants to air.

At three primary tungsten plants, streams with treatable concentrations of ammonia having flows less than 50 l/hr were treated with air stripping for design and cost determination. None of the waste streams were air pollution control streams. The air stripping is accomplished by aeration and agitation in the chemical precipitation batch tank, which includes a ventilation hood. Air stripping is not a model treatment technology because it simply transfers the ammonia from one medium to another, whereas steam stripping allows for ammonia recovery, and if desired, reuse. Air stripping was used in cost estimation instead of steam stripping because at such low flow, continuous operation of steam strippers is not feasible. Therefore, the treatable concentration for ammonia would be difficult to attain. The Agency does not believe that under these circumstances (low flow, non-air pollution control streams) that air stripping will create an air quality problem.

TABLE VIII-1

COST OF COMPLIANCE FOR THE PRIMARY TUNGSTEN SUBCATEGORY
DIRECT DISCHARGERS

(March, 1982 Dollars)

	Proposal Costs		Promulgation Costs	
Option	Capital Cost	Annual Cost	Capital Cost	Annual Cost
A	0	0	619000	1008000
B	458000	74800	647000	943000
C	608000	262000	773000	1008000

TABLE VIII-2

COST OF COMPLIANCE FOR THE PRIMARY TUNGSTEN SUBCATEGORY
INDIRECT DISCHARGERS

(March, 1982 Dollars)

	Proposal Costs		Promulgation Costs	
Option	Capital Cost	Annual Cost	Capital Cost	Annual Cost
A	575000	272000	529000	485000
B	777000	302000	504000	407000
C	538000	447000	568000	445000

THIS PAGE INTENTIONALLY LEFT BLANK

SECTION IX

BEST PRACTICABLE CONTROL TECHNOLOGY CURRENTLY AVAILABLE

This section defines the effluent characteristics attainable through the application of best practicable control technology currently available (BPT). BPT reflects the existing performance by plants of various sizes, ages, and manufacturing processes within the primary tungsten subcategory, as well as the established performance of the recommended BPT systems. Particular consideration is given to the treatment already in place at plants within the data base.

The factors considered in identifying BPT include the total cost of applying the technology in relation to the effluent reduction benefits from such application, the age of equipment and facilities involved, the manufacturing processes used, nonwater quality environmental impacts (including energy requirements), and other factors the Administrator considers appropriate. In general, the BPT level represents the average of the existing performances of plants of various ages, sizes, processes, or other common characteristics. Where existing performance is uniformly inadequate, BPT may be transferred from a different subcategory or category. Limitations based on transfer of technology are supported by a rationale concluding that the technology is, indeed, transferable, and a reasonable prediction that it will be capable of achieving the prescribed effluent limits (see Tanner's Council of America v. Train, 540 F.2d 1188) (4th Cir. 1976). BPT focuses on end-of-pipe treatment rather than process changes or internal controls, except where such practices are common industry practice.

TECHNICAL APPROACH TO BPT

The Agency studied the nonferrous metals category to identify the processes used, the wastewaters generated, and the treatment processes installed. Information was collected from industry using data collection portfolios, and specific plants were sampled and the wastewaters analyzed. Some of the factors which must be considered in establishing effluent limitations based on BPT have already been discussed. The age of equipment and facilities, processes used, and raw materials were taken into account in subcategorization and subdivision and are discussed fully in Section IV. Nonwater quality impacts and energy requirements are considered in Section VIII.

The primary tungsten subcategory has been subdivided into 14 potential wastewater sources. Since the water use, discharge rates, and pollutant characteristics of each of these wastewaters is potentially unique, effluent limitations will be developed for each of these building blocks.

For each of the subdivisions, a specific approach was followed for the development of BPT mass limitations. To account for production and flow variability from plant to plant, a unit of production or production normalizing parameter (PNP) was determined for each waste stream which could then be related to the flow from the process to determine a production normalized flow. Selection of the PNP for each process element is discussed in Section IV. Each process within the subcategory was then analyzed to determine whether or not operations included generated wastewater, specific flow rates generated, and the specific production normalized flows for each process. This analysis is discussed in detail in Section V. Nonprocess wastewater such as rainfall runoff and noncontact cooling water is not considered in the analysis.

Normalized flows were analyzed to determine which flow was to be used as part of the basis for BPT mass limitations. The selected flow (sometimes referred to as a BPT regulatory flow or BPT discharge flow) reflects the water use controls which are common practices within the industry. The BPT normalized flow is based on the average of all applicable data. Plants with normalized flows above the average may have to implement some method of flow reduction to achieve the BPT limitations. In most cases, this will involve improving housekeeping practices, better maintenance to limit water leakage, or reducing excess flow by turning down a flow valve. It is not believed that these modifications would incur any costs for the plants.

For the development of effluent limitations, mass loadings were calculated for each wastewater source or subdivision. This calculation was made on a stream-by-stream basis, primarily because plants in this category may perform one or more of the operations in various combinations. The mass loadings (milligrams of pollutant per metric ton of production unit - mg/kkg) were calculated by multiplying the BPT normalized flow (l/kkg) by the treatability concentration using the BPT treatment system (mg/l) for each pollutant parameter to be limited under BPT.

The Agency usually establishes wastewater limitations in terms of mass rather than concentration. This approach prevents the use of dilution as a treatment method (except for controlling pH). The production normalized wastewater flow (l/kkg) is a link between the production operations and the effluent limitations. The pollutant discharge attributable to each operation can be calculated from the normalized flow and effluent concentration achievable by the treatment technology and summed to derive an appropriate limitation for each subcategory.

BPT effluent limitations are based on the average of the discharge flow rates for each source; consequently, the treatment technologies which are currently used by the lowest dischargers will be the treatment technologies most likely required to meet BPT limitations. Section VII discusses the various treatment technologies which are currently in place for each wastewater

source. In most cases, the current treatment technologies consist of chemical precipitation and sedimentation (lime and settle technology) and a combination of reuse and recycle to reduce flow. Ammonia steam stripping is added to streams containing treatable concentrations of ammonia. Oil skimming is added to remove oil and grease from calcium tungstate (synthetic scheelite) wash. Consequently, the typical BPT treatment scheme will consist of ammonia steam stripping (if needed), oil skimming (if needed), chemical precipitation, and sedimentation. This BPT treatment scheme is presented schematically in Figure IX-1 (page 3097).

The overall effectiveness of end-of-pipe treatment for the removal of wastewater pollutants is improved by the application of water flow controls within the process to limit the volume of wastewater requiring treatment. The controls or in-process technologies recommended under BPT include only those measures which are commonly practiced within the subcategory and which reduce flows to meet the production normalized flow for each operation.

In making technical assessments of data, reviewing manufacturing processes, and assessing wastewater treatment technology options, both indirect and direct dischargers have been considered as a single group. An examination of plants and processes did not indicate any process differences based on the type of discharge, whether it be direct or indirect.

INDUSTRY COST AND POLLUTANT REMOVAL ESTIMATES

In balancing costs in relation to pollutant removal estimates, EPA considers the volume and nature of existing discharges, the volume and nature of discharges expected after application of BPT, the general environmental effects of the pollutants, and the cost and economic impacts of the required pollution control level. The Act does not require or permit consideration of water quality problems attributable to particular point sources or industries, or water quality improvements in particular water quality bodies. Accordingly, water quality considerations were not the basis for selecting the proposed BPT. See Weyerhaeuser Company v. Costle, 590 F.2d 1011 (D.C. Cir. 1978).

The methodology for calculating pollutant removal estimates and plant compliance costs is discussed in Section X. The pollutant removal estimates have been revised since proposal based on comments and on new data. Table X-2 (page 3109) shows the pollutant removal estimates for each treatment option. Compliance costs for direct dischargers are presented in Table VIII-1 (page 3073).

BPT OPTION SELECTION

The technology basis for the BPT limitations is Option A, chemical precipitation and sedimentation technology to remove metals and solids from combined wastewaters and to control pH,

ammonia steam stripping preliminary treatment to remove ammonia, and oil skimming preliminary treatment to remove oil and grease (if necessary). The promulgated technology is equivalent to the proposed technology, with the exception of oil skimming. Lime and settle technology is currently demonstrated at three of the four direct discharging plants in this subcategory. The BPT treatment scheme is presented in Figure IX-1(page 3088).

Ammonia steam stripping is demonstrated in the nonferrous metals manufacturing category, including three primary tungsten plants. As discussed in detail in Section VII of Vol. I, EPA believes that performance data from the iron and steel manufacturing category provide a valid measure of this technology's performance on nonferrous metals manufacturing category wastewater because raw wastewater concentrations of ammonia are of the same order of magnitude in the respective raw wastewater matrices.

Chemical analysis data were collected of raw waste (treatment influent) and treated waste (treatment effluent) from one coke plant of the iron and steel manufacturing category. A contractor for EPA, using EPA sampling and chemical analysis protocols, collected data paired samples in a two-month period. These data are the data base for determining the effectiveness of ammonia steam stripping technology and are contained within the administrative record supporting this document. Ammonia treatment at this coke plant consisted of two steam stripping columns in series with steam injected countercurrently to the flow of the wastewater. A lime reactor for pH adjustment separated the two stripping columns.

The raw untreated wastewater samples from the coke facility contained ammonia concentrations of 599, 226, 819, 502, 984, and 797 mg/l. The raw untreated wastewater from the primary tungsten subcategory contained treatable ammonia concentrations ranging from 134 to 1,790 mg/l.

The iron and steel data are supported by ammonia steam stripping performance data from a well-operated zirconium-hafnium plant in the nonferrous metals manufacturing category. The long-term mean and variability of the data collected in a one year period agree with the coke plant data.

As discussed in Section VII of this document, steam stripping may not achieve the treatment effectiveness concentrations for ammonia for the ion exchange raffinate if this stream contains high concentrations of sulfates. Sulfate concentrations exceeding 1000 mg/l may interfere with steam stripping performance by plugging the stripper column, resulting in frequent cleaning and downtime. As a result of the litigation settlement, EPA has proposed suspending, under limited circumstances, the ammonia treatment effectiveness concentration value for the ion-exchange raffinate building block. These circumstances are: (a) where the influent (called "mother liquor") to or effluent (called "raffinate") from this process contains sulfates at concentrations exceeding 1000 mg/l ("high

sulfate influent or effluent"); (b) where the high sulfate influent or effluent is treated by ammonia steam stripping; and (c) where this high sulfate raffinate or mother liquor is not commingled with other wastestreams before treatment for steam stripping for ammonia removal.

In the event a plant satisfies these conditions, mass limitations will be established on a Best Professional Judgment ("BPJ") basis by a permit writer pursuant to 40 CFR 125.3(c)(2) and (3) using the regulatory flows used as the basis for the promulgated effluent limitation guidelines and standards established in this proceeding and treatment effectiveness concentration values determined by the permit writer.

Oil skimming is added to remove oil and grease from calcium tungstate (synthetic scheelite) precipitate wash. Although oil and grease is not limited under this regulation, oil skimming is needed for BPT to ensure proper metals removal. Oil and grease interfere with the chemical addition and mixing required for chemical precipitation treatment.

Implementation of the promulgated BPT limitations will remove an estimated 4,800 kg/yr of toxic metals, 141,000 kg/yr of ammonia, and 50,300 kg/yr of TSS from raw wastewater. EPA projects $115,000 (March, 1982 dollars) in capital costs and $168,000 (March, 1982 dollars) in annual costs for achieving the promulgated BPT. These costs represent wastewater treatment equipment not in place.

WASTEWATER DISCHARGE RATES

A BPT discharge rate is calculated for each subdivision based on the average of the flows of the existing plants, as determined from analysis of dcp. The discharge rate is used with the achievable treatment concentrations to determine BPT effluent limitations. Since the discharge rate may be different for each wastewater source, separate production normalized discharge rates for each of the 14 wastewater sources are discussed below and summarized in Table IX-1 (page 3088). The discharge rates are normalized on a production basis by relating the amount of wastewater generated to the mass of the intermediate product which is produced by the process associated with the waste stream in question. As a result of the litigation settlement, EPA is proposing to modify the production basis for determining the amount of pollutant which may be discharged to the amount of the element tungsten produced or processed. As discussed in Section V, in the final regulation, EPA used the chemical salt form of tungsten which was believed appropriate for the processing step or building block being regulated. However, petitioners stated that the chemical formulas were incorrect and confusing. Using the element tungsten produced or processed as a production normalizing parameter rather than a chemical compound makes the production basis clear and unambiguous. This change will affect all of the building blocks except for §421.102(i) through (k), §421.103(i) through (k), §421.104(i) through (k), §421.105(i)

through (k), and §106(i) through (k), which were already based on the amount of elemental tungsten produced. This change will affect the regulatory flows for these building blocks, which are based on the production normalizing parameter. These production normalizing parameters, or PNPs, are also listed in Table IX-1.

After proposal, EPA became aware of nine primary tungsten plants which were not previously included in the subcategory. Wastewater flow rates and production data were solicited from these plants through dcp. Some data from plants already in the Agency's data base were updated and revised because of comments received concerning the proposed regulation. This information was collected by telephone contacts. The new data were used to revise production normalized flow rates and recalculate regulatory flow allowances where appropriate.

Section V of this document further describes the discharge flow rates and presents the water use and discharge flow rates for each plant by subdivision in Tables V-1 through V-11 (pages 2989-2996).

TUNGSTIC ACID RINSE WATER

The BPT wastewater discharge rate at proposal for tungstic acid rinse water was 47,600 l/kkg (11,400 gal/ton) of tungstic acid produced. This rate was allocated only for those plants which acid leach ore concentrates and then rinse the insoluble tungstic acid with water. Two plants leached ore concentrates in this manner and generated 57,600 and 37,600 l/kkg of wastewater.

A third plant generated a tungstic acid rinse water from an acid leaching step, but this production normalized flow was much larger than the other flows in this subdivision and was not included in the calculations. This stream was considered unique because an alkali leaching product, not ore concentrates, were leached, and the tungstic acid produced was more thoroughly rinsed and dried in preparation for sale as a by-product. Consequently, the BPT flows at proposal were based on data from the first two plants while the third one mentioned above should be considered unique and regulated on a case-by-case basis.

The BPT wastewater discharge rate at promulgation for tungstic acid rinse was 30,190 l/kkg (7,240 gal/ton) of tungstic acid produced. After proposal, plant 9014 updated its flow for this waste stream by submitting a revised dcp. The revised flow is 2,780 l/kkg. The two other plants have not changed their processes. Consequently, the BPT flow is based on the average of the discharge from plants 9011 and 9014. As a result of the change in production normalizing parameter in the litigation settlement, the final BPT wastewater discharge rate is 41,030 l/kkg (9,839 gal/ton) of tungstic acid (as W) produced. Water use and wastewater discharge rates are presented in Table V-1 (page 2989).

ACID LEACH WET AIR POLLUTION CONTROL

The BPT wastewater discharge rate at proposal for acid leach scrubber water was 37,700 l/kkg (9,040 gal/ton) of tungstic acid produced. This rate was allocated only for those plants which acid leach ore concentrates and use a wet scrubbing system to control the fumes. Two plants which treated ore concentrates in this manner use water for emission control. Water use and wastewater discharge rates are presented in the proposed primary tungsten supplement. One plant reported a once-through flow of 37,700 l/kkg while the second reported no generation of wastewater due to total recycle. Extensive recycle may be possible for this stream, but zero discharge may not be technically feasible unless a recycle system controls dissolved solids build-up, the wastewater is evaporated, or there is a production operation which can accept the quality of treated wastewater. Some of these zero discharge possibilities are site specific and, hence, may not apply to all plants. For this reason, the BPT flow at proposal was based on the non-zero discharger flows only, and in this case, there was only one non-zero discharger.

The BPT wastewater discharge rate at promulgation for acid leach wet air pollution control was 26,350 l/kkg (6,319 gal/ton) of tungstic acid produced. Plant 9014 reuses its scrubber water as tungstic acid rinse water. At proposal the Agency considered this zero discharge and did not include the flow in the calculation of the regulatory allowance. However, the Agency believes this reuse practice is site specific and should not preclude the use of this scrubber data in the calculation of a flow allowance. The acid leach scrubber flow allowance is based on the scrubber water use, not the discharge. Therefore, the BPT flow is the average production normalized water use at the two plants. As a result of the change in the final PNPs, the final BPT wastewater discharge rate is 35,810 l/kkg (8,587 gal/ton) of tungstic acid (as W) produced. Water use and discharge rates for this stream are shown in Table V-2 (page 2989).

ALKALI LEACH WASH

The BPT wastewater discharge rate at proposal for alkali leach wash was 46,700 l/kkg (11,200 gal/ton) of sodium tungstate produced. It was the average of two plants generating this wastewater. This rate was allocated only for those plants which use an alkaline leaching step to process ore concentrates followed by a filtering or wash/decant step. Of the four plants which alkali leach, only two reported generating a wastewater, at rates of 10,700 l/kkg and 82,600 l/kkg. The two plants which report zero discharge from the alkali leaching step were not considered in the regulatory flow since zero discharge is feasible in only a few site-specific applications as explained above.

No wastewater discharge allowance for alkali leach wash will be provided for the promulgated BPT. New data received by the

Agency show that one of the four plants with this waste stream at proposal no longer practices alkali leaching while another plant added to the data base after proposal reports generating this wastewater. Water use and discharge rates are presented in Table V-3 (page 2990). Analysis of the data shows that all four plants with this stream evaporate this wastewater by either artificial means or evaporation ponds. Since zero discharge of alkali leach wash is practiced at all four plants, no discharge allowance is necessary.

ALKALI LEACH WASH CONDENSATE

As a result of data provided after the promulgation of this regulation, EPA has proposed a BPT discharge allowance based on a wastewater discharge rate for alkali leach wash condensate of 19,180 l/kkg (4,599 gal/ton) of sodium tungstate (as W) produced. This flow is based on the flow rate at the sole plant which provided data.

MOLYBDENUM SULFIDE PRECIPITATION WET AIR POLLUTION CONTROL

No BPT wastewater discharge allowance will be provided for molybdenum sulfide precipitation wet air pollution control. Two plants added to the subcategory since proposal report the use of wet scrubbing systems to control hydrogen sulfide fumes evolved during precipitation of molybdenum impurities from sodium tungstate solution. Therefore, the Agency added this subdivision to the subcategory for promulgation. Water use and production data submitted were incomplete for both plants; however, both plants completely reuse this wastewater in the primary tungsten process. Since this practice is demonstrated in both plants in the subcategory with this waste stream, no flow allowance is necessary.

ION-EXCHANGE RAFFINATE (COMMINGLED AND NOT COMMINGLED WITH OTHER PROCESS AND NONPROCESS STREAMS)

The BPT wastewater discharge rate at proposal for ion-exchange raffinate was 51,200 l/kkg (12,300 gal/ton) of ammonium tungstate produced. This rate was allocated only to those plants which use a liquid ion-exchange process. The two plants operating ion-exchange processes at proposal generated raffinate streams at flows of 29,800 l/kkg and 72,500 l/kkg. Water use and wastewater discharge rates are presented in the proposed primary tungsten supplement. These values were averaged to calculate the regulatory flow. The plant which generated the 72,500 l/kkg of wastewater is a zero discharge plant, but this flow was still included in the calculation since its ability to achieve zero discharge through an end-of-pipe treatment (evaporation and percolation from a settling pond) is site-specific.

The BPT wastewater discharge allowance at promulgation for ion-exchange raffinate was 50,707 l/kkg (12,160 gal/ton) of ammonium tungstate produced. The two plants with this stream at proposal updated their flows and production. Two other plants were added

to the data base because of new data submittals. Water use and discharge rates are presented in Table V-4 (page 2990). The BPT flow is based on the average discharge from three of the four plants. One plant was not used in the average because its data were collected during plant startup and reflected extremely high water use. The Agency does not believe this plant's data are representative of a normal operating ion-exchange process. As a result of the change in production normalizing parameter the final BPT wastewater discharge rate is 88,480 l/kkg (21,220 gal/ton) of ammonium tungstate (as W) produced.

CALCIUM TUNGSTATE PRECIPITATE WASH

The BPT wastewater discharge rate at proposal for calcium tungstate precipitate wash was 37,200 l/kkg (8,920 gal/ton) of calcium tungstate produced. This rate was allocated only to those plants which precipitate calcium tungstate from a sodium tungstate solution by adding calcium chloride. The filtrate or rinses of the precipitate make up this wastewater. At proposal, all four plants which precipitate calcium tungstate report generating a wastewater, although the data was insufficient to quantify the flow from one plant. The BPT flow rate was the average of the remaining three flows, which ranged from 21,000 l/kkg to 65,800 l/kkg. The plant inside this range was actually a zero discharge plant, but its flow generation rate is still used in calculation since its ability to achieve zero discharge status is site-specific.

The BPT wastewater discharge allowance at promulgation was 47,140 l/kkg (11,305 gal/ton) of calcium tungstate produced. Data were collected from the plant that reported insufficient data at proposal. Two additional plants were included based on new dcp submittals. The data from one of these plants (# 9030) were collected during plant startup and reflected extremely high water use. The Agency does not believe these data are representative of a normal operating ion-exchange process. The BPT flow is based on the average of five plants excluding plant 9030. As a result of the change in production normalizing parameter the final BPT wastewater discharge rate is 73,810 l/kkg (17,700 gal/ton) of calcium tungstate (as W) produced. Water use and discharge rates are presented in Table V-5 (page 2991).

CRYSTALLIZATION AND DRYING OF AMMONIUM PARATUNGSTATE

No BPT wastewater discharge rate was provided for the crystallization and drying of ammonium paratungstate at proposal. Of the four plants which crystallized and then dried ammonium paratungstate, three were direct dischargers which had reduced the flow of this wastewater to zero through a combination of reuse and recycle. The fourth plant was a zero discharge plant which pumped its wastes to a settling pond. Water use and discharge rates are presented in the proposed primary tungsten supplement. Since the plants in this category demonstrated the ability to reduce the flow of this stream to zero, it was considered appropriate that the BPT regulatory flow should be

zero.

No BPT wastewater discharge rate is provided for promulgation of the crystallization and drying of ammonium paratungstate stream. One plant was added to the data base based on a new dcp submittal. This plant achieves 100 percent reuse of the water using a settling pond. Three plants achieve zero discharge through combinations of ammonia recovery, recycle, and evaporation. The fifth plant practices partial evaporation and has an ammonia recovery system which is currently not operating. Since the plants with this stream have demonstrated the ability or have the capacity to reduce the flow to zero, it is appropriate that the BPT regulatory flow be zero. The water use and discharge rates are presented in Table V-6 (page 2992).

AMMONIUM PARATUNGSTATE CONVERSION TO OXIDES WET AIR POLLUTION CONTROL

The BPT wastewater discharge rate at proposal for the APT conversion to oxides step was 20,900 l/kkg (5,010 gal/ton) of "blue" oxide (WO_3) produced. This rate was allocated only to those plants which calcined APT to drive off ammonia and produce tungsten oxides (assumed to be WO_3). Most plants used a wet scrubbing system to contain the fumes, and some used an ammonia recovery system. Of the six plants which reported using this process and generating a waste stream, two reduced this flow to zero through combinations of recycle, reuse, and evaporation. These two plants were not considered in the BPT flow calculations since zero discharge was feasible in only a few site-specific applications. Water use and wastewater discharge rates are presented in the proposed primary tungsten supplement. The flow rates from the four direct and indirect dischargers which were averaged to develop the production normalized BPT flow allowance range from 7,430 l/kkg to 36,800 l/kkg.

The BPT wastewater discharge rate at promulgation for APT conversion to oxides wet air pollution control was 21,900 l/kkg (5,252 gal/ton) of tungstic oxide (WO_3) produced. Since proposal the Agency has determined that the wastewater reported at two plants for this stream is actually APT conversion to oxide water of formation. A separate building block was created for this wastewater (see below). Two additional plants were included based on new dcp submittals. Since recycle of this wastewater is not currently practiced, the BPT rate is based on the average discharge from the five plants discharging from this process. As a result of the change in production normalizing parameter, the final BPT wastewater discharge rate is 27,620 l/kkg (6,623 gal/ton) of tungstic oxide (as W) produced. Water use and discharge rates are presented in Table V-7 (page 2993).

AMMONIUM PARATUNGSTATE CONVERSION TO OXIDES WATER OF FORMATION

The BPT wastewater discharge rate at promulgation for APT conversion to oxides water of formation was 50 l/kkg (12 gal/ton) of tungstic oxide (WO_3) produced. As a result of the change in

production normalizing parameter in the litigation settlement, the final BPT wastewater discharge rate is 63 l/kkg (15 gal/ton) of tungstic oxide (as W) produced.

As discussed above, the Agency determined that for two plants, the wastewater reported at proposal for APT conversion to oxides wet air pollution control was actually water of formation. Therefore, a new subdivision was created in the primary tungsten subcategory after proposal. One of the plants collects the wastewater in drums and disposes of it by contract hauling. This plant did not report flow information. The second plant evaporates all of the water. Since complete evaporation may be site-specific to the one plant, and is not demonstrated in the other plant, an allowance is provided. The allowance is equal to the discharge flow from the plant reporting complete flow and production data. Water use and discharge rates are shown in Table V-8 (page 2994).

REDUCTION TO TUNGSTEN WET AIR POLLUTION CONTROL

The BPT wastewater discharge rate at proposal for reduction to tungsten metal scrubber water was 73,200 l/kkg (17,500 gal/ton) of tungsten produced. This rate was allocated only to those plants which use a wet air pollution control system to control particulate emissions from furnaces used to reduce tungsten oxides (WO_x) to tungsten metal. Five of the seven reporting plants that produce tungsten metal in this manner used a wet scrubbing system. Two of these five claimed to have reduced this flow to zero through 100 percent recycle. Extensive recycle was demonstrated for this stream, but a zero discharge may not be technically feasible unless a recycle system controls dissolved solids build-up, the wastewater is evaporated, or there is a production operation which can accept the quality of the treated wastewater. Some of these zero discharge possibilities were site-specific and, hence, are not applicable on a nationwide basis. For this reason, BPT flow was based on the non-zero discharger flows only. Of the three dischargers, one had a flow which was six times greater than the others. Since there was no technical basis for this, it was not considered when the two other flows, at 80,500 l/kkg and 65,900 l/kkg, were averaged.

The BPT wastewater discharge rate at promulgation for reduction to tungsten wet air pollution control is 30,802 l/kkg (7,387 gal/ton) of tungsten metal produced. Two plants were added to the data base for this stream because of new dcp submittals. Plant 9014 revised its flow data to reflect current practice. Three plants practice 100 percent recycle of this wastewater. All three of these plants are extremely high water users and all are zero discharging plants. These plants were not included in the calculation of the regulatory flow. One plant, which does not practice recycle, reports a flow which is over 10 times the average flow of the other dischargers. The Agency believes there is no technical basis for this variation and this flow was not included in the calculation. The BPT flow is based on the average water use at plants 9014, 9018, and 9029. Water use and

discharge rates are presented in Table V-9 (page 2995).

REDUCTION TO TUNGSTEN WATER OF FORMATION

The BPT wastewater discharge rate at proposal for water of formation from the reduction of tungsten oxides was 19,400 l/kkg (4,650 gal/ton) of tungsten produced. Of the seven plants which reduce tungsten oxides to tungsten metal, only two report wastewaters that are not associated with wet air pollution control devices or noncontact cooling. Water use and wastewater discharge rates are presented in the proposed primary tungsten supplement. Water of formation is generated when WO_x is reduced to tungsten metal in a hydrogen atmosphere. The BPT wastewater discharge rate was based on the discharge rate of one of the plants. The other plant did not discharge this wastewater and was not considered in calculating the discharge allowance.

The BPT wastewater discharge rate at promulgation for reduction to tungsten water of formation is 489 l/kkg (117 gal/ton) of tungsten metal produced. This allowance is based on updated data received after proposal from several different plants rather than the one used at proposal. Plant 9010, on which the proposed BPT flow was based, revised its flow but did not provide production data, which does not allow use of the new data. Data from three new plants and one existing plant were received through dcp submittals and telephone contacts. The BPT flow is based on the average water of formation generated at these four plants. Water use and discharge rates are presented in Table V-10 (page 2996).

In plants which use wet scrubbing systems, this water of formation is most likely vaporized upon formation and then recondensed in the scrubber system. Consequently, plants with wet scrubbing systems on their reduction furnaces do not report a separate water of formation waste stream. For this reason, this BPT flow rate should be allocated only to those plants which reduce oxides to metal, but do not use a wet air pollution control system.

TUNGSTEN POWDER ACID LEACH AND WASH

The BPT wastewater discharge rate at promulgation for tungsten powder acid leach and wash is 2,400 l/kkg (576 gal/ton) of tungsten produced. This waste stream was not considered at proposal. Through a new dcp submittal and telephone contacts, the Agency determined that two plants in the subcategory generated wastewater from leaching tungsten powders with acid. The BPT flow is based on the average discharge from the two plants. Table V-11 (page 2996) presents water use and discharge rates for this stream.

REGULATED POLLUTANT PARAMETERS

The raw wastewater concentrations from individual operations and the subcategory as a whole were examined to select certain pollutant parameters for limitation. This examination and

evaluation was presented in Section VI of the proposed primary tungsten supplement. A total of six pollutants or pollutant parameters were selected for limitation under proposed BPT and are listed below:

122. lead
125. selenium
128. zinc
ammonia
TSS
pH

Analytical data gathered since proposal at two primary tungsten plants have demonstrated that selenium is not found on a subcategory-wide basis. Therefore, selenium is eliminated as a control parameter. Based on the evaluation and examination presented in Section VI of this document, the pollutants or pollutant parameters selected for limitation under promulgated BPT are:

122. lead
128. zinc
ammonia
TSS
pH

EFFLUENT LIMITATIONS

The treatable concentrations achievable by application of the promulgated BPT are discussed in Section VII of Vol. I and summarized there in Table VII-21 (page 248). With the exception of ammonia, these treatable concentrations (both one day maximum and monthly average values) are multiplied by the BPT normalized discharge flows summarized in Table IX-1 to calculate the mass of pollutants allowed to be discharged per mass of product. The results of these calculations in milligrams of pollutant per kilogram of product represent the BPT effluent limitations and are presented in Table IX-2 (page 3090) for each individual waste stream.

TABLE IX-1

BPT WASTEWATER DISCHARGE RATES FOR THE PRIMARY TUNGSTEN SUBCATEGORY

Wastewater Stream	BPT Normalized Discharge Rate l/kkg	gal/ton	Production Normalizing Parameter
Tungstic Acid Rinse Water	41,030	9,839	Tungstic acid (as W) produced
Acid Leach Wet Air Pollution Control	35,810	8,587	Tungstic acid (as W) produced
Alkali Leach Wash	0	0	Sodium tungstate (as W) produced
Alkali Leach Wash Condensate	19,180	4,599	Sodium Tungstate (as W) produced
Ion-Exchange Raffinate (commingled and not commingled with other process and nonprocess streams)	88,480	21,220	Ammonium tungstate (as W) produced
Calcium Tungstate Precipitate Wash	73,810	17,700	Calcium tungstate (as W) produced
Crystallization and Drying of Ammonium Paratungstate	0	0	Ammonium paratungstate (as W) produced
Ammonium Paratungstate Conversion to Oxides Wet Air Pollution Control	27,620	6,623	Tungstic oxide (as W) produced
Ammonium Paratungstate Conversion to Oxides Water of Formation	63	15	Tungstic oxide (WO_3) produced

TABLE IX-1 (Continued)

BPT WASTEWATER DISCHARGE RATES FOR THE PRIMARY TUNGSTEN SUBCATEGORY

Wastewater Stream	BPT Normalized Discharge Rate l/kkg	gal/ton	Production Normalizing Parameter
Reduction to Tungsten Air Pollution Control	30,802	7,387	Tungsten metal produced
Reduction to Tungsten Water of Formation	489	117	Tungsten metal produced
Tungsten Powder Acid Leach and Wash	2,400	576	Tungsten metal produced
Molybdenum Sulfide Precipitation Wet Air Pollution Control	0	0	Tungsten metal produced

TABLE IX-2

BPT EFFLUENT LIMITATIONS FOR THE PRIMARY TUNGSTEN SUBCATEGORY

(a) Tungstic Acid Rinse BPT

Pollutant or Pollutant Property	Maximum for Any One Day	Maximum for Monthly Average
Metric Units - mg/kg of tungstic acid (as W) produced English Units - lbs/million lbs of tungstic acid (as W) produced		
Cadmium	10.270	4.529
Chromium	13.280	5.434
*Lead	17.230	8.205
Nickel	57.970	38.340
Silver	12.380	5.132
Thallium	61.890	27.470
*Zinc	59.900	25.030
*Ammonia (as N)	5,469.000	2,404.000
*TSS	1,682.000	800.000
*pH	Within the range of 7.0 to 10.0 at all times	

(b) Acid Leach Wet Air Pollution Control BPT

Pollutant or Pollutant Property	Maximum for Any One Day	Maximum for Monthly Average
Metric Units - mg/kg of tungstic acid (as W) produced English Units - lbs/million lbs of tungstic acid (as W) produced		
Cadmium	8.959	3.953
Chromium	11.590	4.743
*Lead	15.040	7.162
Nickel	50.590	33.470
Silver	10.800	4.480
Thallium	54.020	23.980
*Zinc	52.280	21.840
*Ammonia (as N)	4,773.000	2,098.000
*TSS	1,468.000	698.300
*pH	Within the range of 7.0 to 10.0 at all times	

*Regulated Pollutant

TABLE IX-2 (Continued)

BPT EFFLUENT LIMITATIONS FOR THE
PRIMARY TUNGSTEN SUBCATEGORY

(c) Alkali Leach Wash BPT

Pollutant or Pollutant Property	Maximum for Any One Day	Maximum for Monthly Average
Metric Units - mg/kg of sodium tungstate (as W) produced English Units - lbs/million lbs of sodium tungstate (as W) produced		
Cadmium	0.000	0.000
Chromium	0.000	0.000
*Lead	0.000	0.000
Nickel	0.000	0.000
Silver	0.000	0.000
Thallium	0.000	0.000
*Zinc	0.000	0.000
*Ammonia (as N)	0.000	0.000
*TSS	0.000	0.000
*pH	Within the range of 7.0 to 10.0 at all times	

(d) Alkali Leach Wash Condensate BPT

Pollutant or Pollutant Property	Maximum for Any One Day	Maximum for Monthly Average
Metric Units - mg/kg of sodium tungstate (as W) produced English Units - lbs/million lbs of sodium tungstate (as W) produced		
Cadmium		
Chromium		
*Lead	8.057	3.837
Nickel		
Silver		
Thallium		
*Zinc	28.011	11.700
*Ammonia (as N)	2,557.000	1,124.000
*TSS	786.200	374.100
*pH	Within the range of 7.0 to 10.0 at all times	

*Regulated Pollutant

TABLE IX-2 (Continued)

BPT EFFLUENT LIMITATIONS FOR THE
PRIMARY TUNGSTEN SUBCATEGORY

(e) Ion-Exchange Raffinate (commingled with other Process or Nonprocess waters) BPT

Pollutant or Pollutant Property	Maximum for Any One Day	Maximum for Monthly Average
Metric Units - mg/kg of ammonium tungstate (as W) produced English Units - lbs/million lbs of ammonium tungstate (as W) produced		
Cadmium	17.240	7.606
Chromium	22.310	9.127
*Lead	37.160	17.700
Nickel	97.360	64.400
Silver	20.790	8.620
Thallium	103.900	46.140
*Zinc	129.200	53.970
*Ammonia (as N)	11,790.000	5,185.000
*TSS	3,627.000	1,726.000
*pH	Within the range of 7.0 to 10.0 at all times	

(f) Ion-Exchange Raffinate (Not Commingled with other Process or Nonprocess waters) BPT

Pollutant or Pollutant Property	Maximum for Any One Day	Maximum for Monthly Average
Metric Units - mg/kg of ammonium tungstate (as W) produced English Units - lbs/million lbs of ammonium tungstate (as W) produced		
Cadmium		
Chromium		
*Lead	37.160	17.700
Nickel		
Silver		
Thallium		
*Zinc	192.200	53.970
*Ammonia (as N)	11,790.000	5,185.000
*TSS	3,627.000	1,726.000
*pH	Within the range of 7.0 to 10.0 at all times	

*Regulated Pollutant

TABLE IX-2 (Continued)

BPT EFFLUENT LIMITATIONS FOR THE
PRIMARY TUNGSTEN SUBCATEGORY

(g) Calcium Tungstate Precipitate Wash BPT

Pollutant or Pollutant Property	Maximum for Any One Day	Maximum for Monthly Average
Metric Units - mg/kg of calcium tungstate (as W) produced English Units - lbs/million lbs of calcium tungstate (as W) produced		
Cadmium	16.030	7.071
Chromium	20.740	8.485
*Lead	31.000	14.760
Nickel	90.510	59.870
Silver	19.330	8.014
Thallium	96.640	42.900
*Zinc	107.800	45.020
*Ammonia (as N)	9,838.000	4,325.000
*TSS	3,026.000	1,439.000
*pH	Within the range of 7.0 to 10.0 at all times	

(h) Crystallization and Drying of Ammonium Paratungstate BPT

Pollutant or Pollutant Property	Maximum for Any One Day	Maximum for Monthly Average
Metric Units - mg/kg of ammonium paratungstate (as W) produced English Units - lbs/million lbs of ammonium paratungstate (as W) produced		
Cadmium	0.000	0.000
Chromium	0.000	0.000
*Lead	0.000	0.000
Nickel	0.000	0.000
Silver	0.000	0.000
Thallium	0.000	0.000
*Zinc	0.000	0.000
*Ammonia (as N)	0.000	0.000
*TSS	0.000	0.000
*pH	Within the range of 7.0 to 10.0 at all times	

(i) Ammonium Paratungstate Conversion to Oxides Wet Air Pollution Control BPT

Pollutant or Pollutant Property	Maximum for Any One Day	Maximum for Monthly Average

Metric Units - mg/kg of tungstic oxide (as W) produced English Units - lbs/million lbs of tungstic oxide (as W) produced		
Cadmium	7.446	3.285
Chromium	9.636	3.942
*Lead	11.600	5.523
Nickel	42.050	27.810
Silver	8.979	3.723
Thallium	44.900	19.930
*Zinc	40.320	16.850
*Ammonia (as N)	3,681.000	1,618.000
*TSS	1,132.000	538.500
*pH	Within the range of 7.0 to 10.0 at all times	

(j) Ammonium Paratungstate Conversion to Oxides Water of Formation BPT

Pollutant or Pollutant Property	Maximum for Any One Day	Maximum for Monthly Average
Metric Units - mg/kg of tungstic oxide (as W) produced English Units - lbs/million lbs of tungstic oxide (as W) produced		
Cadmium	0.017	0.008
Chromium	0.022	0.009
*Lead	0.026	0.013
Nickel	0.096	0.064
Silver	0.021	0.009
Thallium	0.103	0.046
*Zinc	0.092	0.038
*Ammonia (as N)	8.398	3.692
*TSS	2.583	1.229
*pH	Within the range of 7.0 to 10.0 at all times	

*Regulated Pollutant

TABLE IX-2 (Continued)

BPT EFFLUENT LIMITATIONS FOR THE
PRIMARY TUNGSTEN SUBCATEGORY

(k) Reduction to Tungsten Wet Air Pollution Control BPT

Pollutant or Pollutant Property	Maximum for Any One Day	Maximum for Monthly Average
Metric Units - mg/kg of tungsten metal produced English Units - lbs/million lbs of tungsten metal produced		
Cadmium	10.470	4.620
Chromium	13.550	5.544
*Lead	12.940	6.161
Nickel	59.140	39.120
Silver	12.630	5.236
Thallium	63.140	28.030
*Zinc	44.970	18.790
*Ammonia (as N)	4,106.000	1,805.000
*TSS	1,263.000	600.700
*pH	Within the range of 7.0 to 10.0 at all times	

(l) Reduction to Tungsten Water of Formation BPT

Pollutant or Pollutant Property	Maximum for Any One Day	Maximum for Monthly Average
Metric Units - mg/kg of tungsten metal reduced English Units - lbs/million lbs of tungsten metal reduced		
Cadmium	0.166	0.073
Chromium	0.215	0.088
*Lead	0.205	0.098
Nickel	0.939	0.621
Silver	0.200	0.083
Thallium	1.002	0.445
*Zinc	0.714	0.298
*Ammonia (as N)	65.190	28.660
*TSS	20.050	9.536
*pH	Within the range of 7.0 to 10.0 at all times	

*Regulated Pollutant

TABLE IX-2 (Continued)

BPT EFFLUENT LIMITATIONS FOR THE
PRIMARY TUNGSTEN SUBCATEGORY

(m) Tungsten Powder Acid Leach and Wash BPT

Pollutant or Pollutant Property	Maximum for Any One Day	Maximum for Monthly Average
Metric Units - mg/kg of tungsten metal produced English Units - lbs/million lbs of tungsten metal produced		
Cadmium	0.816	0.360
Chromium	1.056	0.432
*Lead	1.008	0.480
Nickel	4.608	3.048
Silver	0.984	0.408
Thallium	4.920	2.184
*Zinc	3.504	1.464
*Ammonia (as N)	319.900	140.700
*TSS	98.400	46.800
*pH	Within the range of 7.0 to 10.0 at all times	

(n) Molybdenum Sulfide Precipitation Wet Air Pollution Control BPT

Pollutant or Pollutant Property	Maximum for Any One Day	Maximum for Monthly Average
Metric Units - mg/kg of tungsten metal produced English Units - lbs/million lbs of tungsten metal produced		
Cadmium	0.000	0.000
Chromium	0.000	0.000
*Lead	0.000	0.000
Nickel	0.000	0.000
Silver	0.000	0.000
Thallium	0.000	0.000
*Zinc	0.000	0.000
*Ammonia (as N)	0.000	0.000
*TSS	0.000	0.000
*pH	Within the range of 7.0 to 10.0 at all times	

*Regulated Pollutant

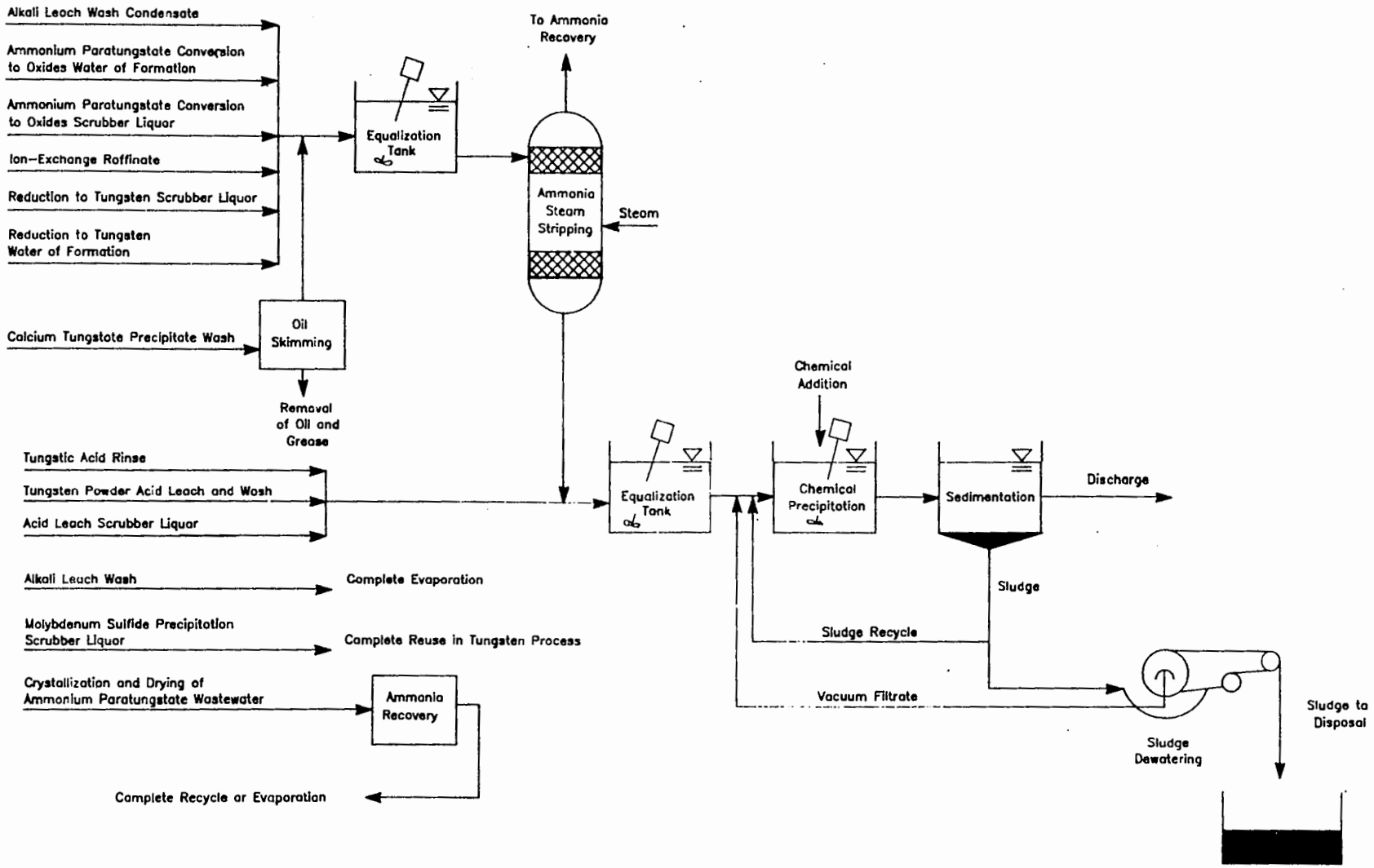

FIGURE IX-1. BPT TREATMENT SCHEME PRIMARY TUNGSTEN SUBCATEGORY

THIS PAGE INTENTIONALLY LEFT BLANK

SECTION X

BEST AVAILABLE TECHNOLOGY ECONOMICALLY ACHIEVABLE

These BAT effluent limitations are based on the best control and treatment technology used by a specific point source within the industrial category or subcategory, or by another category from which it is transferable. Emphasis is placed on additional treatment techniques applied at the end of the treatment systems currently used, as well as reduction of the amount of water used and discharged, process control, and treatment technology optimization.

The factors considered in assessing best available technology economically achievable (BAT) include the age of equipment and facilities involved, the process used, process changes, nonwater quality environmental impacts (including energy requirements), and the costs of application of such technology. BAT represents the best available technology economically achievable at plants of various ages, sizes, processes, or other characteristics. BAT may be transferred from a different subcategory or category. BAT may include feasible process changes or internal controls, even when not in common industry practice.

The required assessment of BAT considers costs, but does not require a balancing of costs against effluent reduction benefits (see Weyerhaeuser v. Costle, 590 F.2d 1011 (D.C. Cir. 1978)). However, in assessing BAT, the Agency has given substantial weight to the economic achievability of the technology.

TECHNICAL APPROACH TO BAT

The Agency reviewed a wide range of technology options and evaluated the available possibilities to ensure that the most effective and beneficial technologies were used as the basis of BAT. To accomplish this, the Agency examined five technology options prior to proposing mass limitations which could be applied to the primary tungsten subcategory as alternatives for the basis of BAT effluent limitations and which would represent substantial progress toward reduction of pollutant discharges over and beyond progress achieved by BPT. Three of these treatment technologies were re-evaluated between proposal and promulgation.

The treatment technologies considered for BAT are summarized below:

Option A (Figure X-1 page 3119) is based on:

- Preliminary treatment with oil skimming (where required)
- Preliminary treatment with ammonia steam stripping (where required)
- Lime precipitation and sedimentation

Option B (Figure X-2 page 3120) is based on:

- o Preliminary treatment with oil skimming (where required)
- o Preliminary treatment with ammonia steam stripping (where required)
- o Lime precipitation and sedimentation
- o In-process flow reduction of acid leach, ammonium paratungstate conversion to oxides, and reduction to tungsten scrubber liquor

Option C (Figure X-3 page 3121) is based on:

- o Preliminary treatment with oil skimming (where required)
- o Preliminary treatment with ammonia steam stripping (where required)
- o Lime precipitation and sedimentation
- o In-process flow reduction of acid leach, ammonium paratungstate conversion to oxides, and reduction to tungsten scrubber liquor
- o Multimedia filtration

The three options examined for BAT are discussed in greater detail on the following pages. The first option considered (Option A) is the same as the BPT treatment and control technology which was presented in the previous section. The last two options each represent substantial progress toward the reduction of pollutant discharges above and beyond the progress achievable by BPT.

OPTION A

Option A for the primary tungsten subcategory is equivalent to the control and treatment technologies which were analyzed for BPT in Section IX (see Figure X-1). The BPT end-of-pipe treatment scheme includes lime precipitation and sedimentation, with ammonia steam stripping preliminary treatment of wastewaters containing treatable concentrations of ammonia and oil skimming preliminary treatment (if required). Oil skimming is added to remove oil and grease from calcium tungstate (synthetic scheelite) precipitate wash. Although oil and grease is not limited under this regulation, oil skimming is needed for BAT to ensure proper metals removal. Oil and grease interferes with the chemical addition and mixing required for chemical precipitation treatment. The discharge rates for Option A are equal to the discharge rates allocated to each stream as a BPT discharge flow.

OPTION B

Option B for the primary tungsten subcategory achieves lower pollutant discharge by building upon the Option A end-of-pipe treatment technology. Flow reduction measures are added to the Option A treatment scheme which consists of lime precipitation and sedimentation, with ammonia steam stripping preliminary treatment of the wastewaters containing treatable concentrations of ammonia and oil skimming preliminary treatment (see Figure X-

2). These flow reduction measures, including in-process changes, result in the elimination of some wastewater streams and the concentration of pollutants in other effluents. As explained in Section VII of the General Development Document, treatment of a more concentrated effluent allows achievement of a greater net pollutant removal and introduces the possible economic cost-effectiveness associated with treating a lower volume of wastewater.

The method used in Option B to reduce process wastewater generation and discharge rates is recycle of water used in wet air pollution control. There are three wet air pollution control wastewater sources regulated under these effluent limitations for which recycle is considered feasible:

- Acid leach wet air pollution control,
- Ammonium paratungstate conversion to oxides wet air pollution control, and
- Reduction to metal wet air pollution control.

Table X-1 (page 3108) presents the number of plants reporting wastewater use with these sources, the number of plants practicing recycle of scrubber liquor, and the range of recycle values being used. Although four plants report total recycle of their scrubber water, some blowdown or periodic cleaning is likely to be needed to prevent the build-up of dissolved and suspended solids since the water picks up particulates and fumes from the air.

Reduction of flow through recycle or reuse represents the best available technology economically achievable for these streams. Acid leaching scrubber water may be reused in the scrubber with periodic blowdown or as rinse water for insoluble tungstic acid. Scrubber water from wet air pollution control systems on furnaces which reduce ammonium paratungstate to oxides or reduce tungsten oxides to metal may also be recycled through the scrubber with periodic blowdown as several plants have demonstrated. Holding tanks are the technology selected (and considered in developing compliance costs) for scrubber water recycle. The tanks allow for settling of particulates in the wastewater before recycle.

OPTION C

Option C for the primary tungsten subcategory consists of all control and treatment requirements of Option B (flow reduction, ammonia steam stripping, oil skimming, lime precipitation and sedimentation) plus multimedia filtration technology added at the end of the Option B treatment scheme (see Figure X-3). Multi-media filtration is used to remove suspended solids, including precipitates of toxic metals, beyond the concentrations attainable by gravity sedimentation. The filter suggested is of the gravity, mixed media type, although other forms of filters, such as rapid sand filters or pressure filters, would perform satisfactorily.

INDUSTRY COST AND POLLUTANT REMOVAL ESTIMATES

As one means of evaluating each technology option, EPA developed estimates of the pollutant reduction benefits and the compliance costs associated with each option. The methodologies are described below.

POLLUTANT REMOVAL ESTIMATES

A complete description of the methodology used to calculate the estimated pollutant reduction, or benefit, achieved by the application of the various treatment options is presented in Section X of Vol. I. The pollutant removal estimates have been revised from proposal based on comments and new data, however, the methodology for calculating pollutant removals was not changed. The data used for estimating removals are the same as those used to revise the compliance costs.

Sampling data collected during the field sampling program were used to characterize the major waste streams considered for regulation. At each sampled facility, the sampling data were production normalized for each unit operation (i.e., mass of pollutant generated per mass of product manufactured). This value, referred to as the raw waste, was used to estimate the mass of toxic pollutants generated within the primary tungsten subcategory. By multiplying the total subcategory production for a unit operation times the corresponding raw waste value, the mass of pollutant generated for that unit operation was estimated.

The volume of wastewater discharged after the application of each treatment option was estimated for each operation at each plant by comparing the actual discharge to the regulatory flow. The smaller of the two values was selected and summed with the other plant flows. The mass of pollutant discharged was then estimated by multiplying the achievable concentration values attainable by the option (mg/l) by the estimated volume of process wastewater discharged by the subcategory. The mass of pollutant removed is simply the difference between the estimated mass of pollutant generated within the subcategory and the mass of pollutant discharged after application of the treatment option. The pollutant removal estimates for direct discharges in the primary tungsten subcategory are presented in Table X-2 (page 3109). Pollutant removal estimates for indirect dischargers are shown in Section XII.

COMPLIANCE COSTS

Compliance costs presented at proposal were estimated using cost curves, which related the total costs associated with installation and operation of wastewater treatment technologies to plant process wastewater discharge. EPA applied these curves on a per plant basis, a plant's costs -- both capital, and operating and maintenance -- being determined by what treatment it has in place and by its individual process wastewater

discharge (from dcp). The final step was to annualize the capital costs, and to sum the annualized capital costs, and the operating and maintenance costs, yielding the cost of compliance for the subcategory.

Since proposal, the cost estimation methodology has been changed as discussed in Section VIII of this document and in Section VIII of the General Development Document. A design model and plant-specific information were used to size a wastewater treatment system for each discharging facility. After completion of the design, capital and annual costs were estimated for each unit of the wastewater treatment system. Capital costs rely on vendor quotes, while annual costs were developed from the literature. The revised compliance costs for direct dischargers are presented in Table VIII-1 (page 3073).

BAT OPTION SELECTION - PROPOSAL

EPA selected Option C for the proposed BAT, which includes flow reduction, lime precipitation, sedimentation, and multimedia filtration, with ammonia steam stripping preliminary treatment of wastewaters containing treatable concentrations of ammonia.

Activated carbon technology (Option E) was also considered, however this technology is not necessary since toxic organic pollutants are not limited in this subcategory (see discussion on Regulated Pollutant Parameters at the end of this section). Reverse osmosis and multiple-effect evaporation (Option F) was considered for the purpose of achieving zero discharge of process wastewater; however, the Agency ultimately rejected this technology because it was determined that its performance for this specific purpose was not adequately demonstrated in this category nor was it clearly transferable from another category.

BAT OPTION SELECTION - PROMULGATION

After proposal and in response to comments, EPA gathered data through special requests, dcp submittals, and telephone contacts. Nine additional plants were included in the subcategory. The new data were used to revise regulatory flow allowances as well as compliance costs. Additional sampling data were also collected by the Agency at two primary tungsten plants. These data were used for recalculating pollutant removal estimates and for revising compliance costs.

EPA is promulgating BAT limitations for this subcategory based on ammonia steam stripping, lime precipitation and sedimentation, in-process flow reduction, and multimedia filtration. Flow reductions are based on 90 percent recycle of scrubber effluent through holding tanks. The end-of-pipe and pretreatment technology basis for BAT limitations being promulgated is the same as that for the proposed limitations. In addition, the treatment performance concentrations, upon which the mass limitations are based, are equal to values used to calculate the proposed mass limitations, except for lead. Ammonia steam

stripping is demonstrated at three primary tungsten facilities. Filtration is not demonstrated within the subcategory; however, it is demonstrated in six nonferrous metals manufacturing subcategories at 23 plants. Recycle of the scrubber effluent through holding tanks is demonstrated in the nonferrous metals category, including one primary tungsten plant.

Implementation of the promulgated BAT limitations will remove annually an estimated 5,140 kg of toxic pollutants, which is 318 kg of toxic metals over the estimated BPT discharge. Ammonia steam stripping is estimated to remove 2,280 kg/yr of ammonia over estimated BPT discharges and 144,000 kg/yr of the ammonia generated.

The estimated capital cost for achieving promulgated BAT is $0.773 million (March, 1982 dollars), and the estimated annual cost is $1.0 million.

The Agency has developed BAT limitations and costs assuming that wastewater will be treated with ammonia stripping, where appropriate, followed by central treatment with lime, settle, and multimedia filtration for metals. It is possible that several plants could achieve more stringent limits and save compliance costs by removing metals first from tungsten acid rinse and acid leach wet air pollution control and then combining these streams with any other process streams for ammonia removals. Since the mass of metals discharged is equal to the product of the treatable concentrations and the flow, a lower flow to central treatment would result in less mass of metals discharged. (The Agency believes that the treatable concentrations can be achieved with the identified treatment technology for all flow rates.) By assuming that waste streams will not be mixed in a central treatment system until after metals are removed, individual permits may be able to eliminate allowances for metals in the six waste streams not containing metals, and thus allow less mass of pollutants to be discharged. The elimination of flow to central treatment would also eliminate the cost of lime, settle, and filter technology for those six processes.

FINAL AMENDMENTS TO THE REGULATION

For the Primary Tungsten Subcategory, EPA promulgated amendments on January 21, 1988, (53 FR 1704) to the regulations promulgated on March 8, 1984 (48 FR 8742) concerning three topics, which are briefly described here.

EPA amended the BPT and BAT effluent limitations and NSPS, PSES and PSNS for ammonia in the ion exchange raffinate building block, when ammonia is treated under a specific set of circumstances. These circumstances are when raffinate contains high sulfate concentrations (greater than 1000 mg/l), and when the raffinate is not commingled with any other waste streams and then is treated by ammonia steam stripping.

EPA added a new building block for alkali leach condensate. This

building block was omitted from the promulgated rule because the Agency believed this condensate would be accounted for through other building blocks.

EPA modified the production basis for determining the amount of pollutant which may be discharged to the amount of element tungsten produced or processed. This was done to avoid any confusion over the chemical formula for the salt form of tungsten.

WASTEWATER DISCHARGE RATES

A BAT discharge rate was calculated for each subdivision based upon the flows of the existing plants, as determined from analysis of the data collection portfolios. The discharge rate is used with the achievable treatment concentrations to determine BAT effluent limitations. Since the discharge rate may be different for each wastewater source, separate production normalized discharge rates for each of the 14 wastewater sources were determined and are summarized in Table X-3 (page 3110). The discharge rates are normalized on a production basis by relating the amount of wastewater generated to the mass of the intermediate product which is produced by the process associated with the waste stream in question. EPA modified the production basis for determining the amount of pollutant which may be discharged to the amount of the element tungsten produced or processed. As discussed in Section IV, in the final regulation, EPA used the chemical salt form of tungsten which was believed appropriate for the processing step or building block being regulated. However, the chemical formulas may have been incorrect and were confusing. Using the element tungsten produced or processed as a production normalizing parameter rather than a chemical compound makes the production basis clear and unambiguous. This change will affect all of the building blocks except for §421.102(i) through (k), §421.103(i) through (k), §421.104(i) through (k), §421.105(i) through (k), and §421.106(i) through (k), which were already based on the amount of elemental tungsten produced. This change will affect the regulatory flows for these building blocks, which are based on the production normalizing parameter. These production normalizing parameters, or PNPs, are also listed in Table X-3.

The BAT discharge rates are the same as the BPT rates except for three scrubber streams for which flow reduction can be achieved. The BAT discharge rates are based on 90 percent recycle of the scrubber effluent. Consequently, the BAT discharge allowance for acid leach wet air pollution control is 3581 l/kkg (859 gal/ton) of tungstic acid (as W) produced. The BAT discharge allowance for ammonium paratungstate conversion to oxides wet air pollution control is 2762 l/kkg (662 gal/ton) of tungstic oxide (as W) produced. Finally, the BAT discharge allowance for reduction to tungsten wet air pollution control is 3,080 l/kkg (739 gal/ton) of tungsten metal produced.

The BAT discharge rates reflect the flow reduction requirements

of the selected BAT option. For this reason, the three scrubber waters which were targeted for flow reduction through recycle for BAT have lower flow rates than the corresponding BPT flows. Since several plants have demonstrated sufficient ability to achieve substantial recycle of these three wastewaters, lower flow allowances for these streams represent the best available technology economically achievable.

REGULATED POLLUTANT PARAMETERS

The raw wastewater concentrations from individual operations and the subcategory as a whole were examined to select certain pollutants and pollutant parameters for limitation. This examination and evaluation was presented in Section VI. The Agency, however, has chosen not to regulate all 17 toxic pollutants selected in this analysis.

The Agency believes that the toxic organic pollutants in the primary tungsten subcategory are present only in trace (deminimus quantities) and are neither causing nor likely to cause toxic effects. Therefore, the following toxic organic pollutants are excluded from regulation:

11. 1,1,1-trichloroethane
55. naphthalene
65. phenol
73. benzo(a)pyrene
79. benzo(ghi)perylene
82. dibenzo(a,h)anthracene
85. tetrachloroethylene
86. toluene

The cost associated with analysis for toxic metal pollutants has prompted EPA to develop an alternative method for regulating and monitoring toxic pollutant discharges from the nonferrous metals manufacturing category. Rather than developing specific effluent mass limitations and standards for each of the toxic metals found in treatable concentrations in the raw wastewater from a given subcategory, the Agency is promulgating effluent mass limitations only for those pollutants generated in the greatest quantities as shown by the pollutant removal estimates. The pollutants selected for specific limitation are listed below:

122. lead
128. zinc
ammonia (as N)

By establishing limitations and standards for certain toxic metal pollutants, discharges will attain the same degree of control over toxic metal pollutants as they would have been required to achieve had all the toxic metal pollutants been directly limited.

This approach is justified technically since the treatable concentrations used for lime precipitation and sedimentation technology are based on optimized treatment for concomitant

multiple metals removal. Thus, even though metals have somewhat different theoretical solubilities, they will be removed at very nearly the same rate in a lime precipitation and sedimentation treatment system operated for multiple metals removal. Filtration as part of the technology basis is likewise justified because this technology removes metals non-preferentially.

The toxic metal pollutants selected for specific limitation in the primary tungsten subcategory to control the discharges of toxic metal pollutants are lead and zinc. Ammonia is also selected for limitation since the methods used to control lead and zinc are not effective in the control of ammonia. The following toxic metal pollutants are excluded from limitation on the basis that they are effectively controlled by the limitations developed for lead and zinc:

118. cadmium
119. chromium (Total)
124. nickel
126. silver
127. thallium

In the proposed limitations, selenium was also selected for control. Analytical data gathered since proposal at two primary tungsten plants have demonstrated that selenium is not a toxic pollutant found on a subcategory-wide basis (see Section VI). Therefore, selenium is eliminated as a control parameter.

EFFLUENT LIMITATIONS

The concentrations achievable by application of BAT are discussed in Section VII of Vol. I and summarized there in Table VII-21 (page 248). The treatable concentrations both one day maximum and monthly average values are multiplied by the BAT normalized discharge flows summarized in Table X-3 to calculate the mass of pollutants allowed to be discharged per mass of product. The results of these calculations in milligrams of pollutant per kilogram of product represent the BAT effluent limitations and are presented in Table X-4 (page 3112) for each waste stream.

The regulatory tables displayed in Sections IX through XII contain the potential limitations which would have been established if the Agency had elected to regulate all of the significant pollutants found at levels above the treatment effectiveness of the model technology. The pollutants actually regulated are marked (*) in each table. The potential regulatory levels of the unregulated (unmarked) pollutants may be used by the permitting authority when it finds the regulation of these pollutants to be necessary.

TABLE X-1

CURRENT RECYCLE PRACTICES WITHIN THE PRIMARY TUNGSTEN SUBCATEGORY

	Number of Plants with Wastewater	Number of Plants Practicing Recycle	Range of Recycle
Acid Leach Wet Air Pollution Control	2	0	-
Ammonium Paratungstate Conversion to Oxides Wet Air Pollution Control	6	1	100
Reduction to Metal Wet Air Pollution Control	7	3	100

Table X-2

POLLUTANT REMOVAL ESTIMATES FOR PRIMARY TUNGSTEN DIRECT DISCHARGERS

POLLUTANT	TOTAL RAW WASTE (kg/yr)	OPTION A DISCHARGED (kg/yr)	OPTION A REMOVED (kg/yr)	OPTION B DISCHARGED (kg/yr)	OPTION B REMOVED (kg/yr)	OPTION C DISCHARGED (kg/yr)	OPTION C REMOVED (kg/yr)
Cadmium	40.8	24.0	16.8	18.4	22.4	11.4	29.4
Chromium	411.7	25.5	386.1	19.6	392.1	16.3	395.4
Lead	4,089.1	36.5	4,052.7	27.9	4,061.2	18.6	4,070.5
Nickel	204.4	204.4	0.0	172.3	32.2	51.2	153.2
Silver	71.6	30.4	41.2	23.3	48.3	16.3	55.3
Thallium	142.9	142.9	0.0	116.4	26.5	79.2	63.7
Zinc	424.4	100.3	324.0	76.8	347.5	53.5	370.8
TOTAL TOXIC METALS	5,384.9	564.1	4,820.8	454.7	4,930.2	246.5	5,138.4
Aluminum	744.5	681.0	63.5	521.5	223.0	346.9	397.6
Ammonia	151,050.1	9,728.0	141,322.1	7,449.6	143,600.5	7,449.6	143,600.5
Fluoride	24,372.1	4,408.0	19,964.1	3,375.6	20,996.5	3,375.6	20,996.5
Iron	10,614.7	124.6	10,490.1	95.4	10,519.3	65.2	10,549.6
TOTAL NONCONVENTIONALS	186,781.4	14,941.6	171,839.8	11,442.1	175,339.3	11,237.3	175,544.2
TSS	53,909.8	3,648.0	50,261.8	2,793.6	51,116.2	605.3	53,304.5
Oil & Grease	2,805.3	2,805.3	0.0	2,328.0	477.3	2,328.0	477.3
TOTAL CONVENTIONALS	56,715.0	6,453.3	50,261.8	5,121.6	51,593.4	2,933.3	53,781.8
TOTAL POLLUTANTS	248,881.4	21,958.9	226,922.4	17,018.4	231,863.0	14,417.1	234,464.3
FLOW (l/yr)		304,000,000		232,800,000		232,800,000	

NOTE: TOTAL TOXIC METALS = Cadmium + Chromium + Lead + Nickel + Silver + Thallium + Zinc
TOTAL NONCONVENTIONALS = Aluminum + Ammonia + Fluoride + Iron
TOTAL CONVENTIONALS = TSS + Oil & Grease
TOTAL POLLUTANTS = Total Toxic Metals + Total Nonconventionals + Total Conventionals

OPTION A = Ammonia Steam Stripping, Lime Precipitation, and Sedimentation
OPTION B = Option A, plus In-Process Flow Reduction
OPTION C = Option B, plus Multimedia Filtration

TABLE X-3

BAT WASTEWATER DISCHARGE RATES FOR THE PRIMARY TUNGSTEN SUBCATEGORY

Wastewater Stream	BAT Normalized Discharge Rate l/kkg	gal/ton	Production Normalization Parameter
Tungstic Acid Rinse Water	41,030	9,839	Tungstic acid (as W) produced
Acid Leach Wet Air Pollution Control	3,581	859	Tungstic acid (as W) produced
Alkali Leach Wash	0	0	Sodium tungstate (as W) produced
Alkali Leach Wash Condensate	19,180	4,599	Sodium Tungstate (as W) produced
Ion-Exchange Raffinate (commingled and not commingled with other process and nonprocess streams)	88,480	21,220	Ammonium tungstate (as W) produced
Calcium Tungstate Precipitate Wash	73,810	17,700	Calcium tungstate (as W) produced
Crystallization and Drying of Ammonium Para-tungstate	0	0	Ammonium paratung-state (as W) produced
Ammonium Paratung-state Conversion to Oxides Wet Air Pollution Control	2,762	662	Tungstic oxide (as W) produced
Ammonium Paratung-state Conversion to Oxides Water of Formation	63	15	Tungstic oxide (WO3) produced

TABLE X-3 (Continued)

BAT WASTEWATER DISCHARGE RATES FOR THE PRIMARY TUNGSTEN SUBCATEGORY

Wastewater Stream	BAT Normalized Discharge Rate l/kkg	gal/ton	Production Normalization Parameter
Reduction to Tungsten Air Pollution Control	3,800	739	Tungsten metal produced
Reduction to Tungsten Water of Formation	489	117	Tungsten metal produced
Tungsten Powder Acid Leach and Wash	2,400	576	Tungsten metal produced
Molybdenum Sulfide Precipitation Wet Air Pollution Control	0	0	Tungsten metal produced

TABLE X-4

BAT EFFLUENT LIMITATIONS FOR THE PRIMARY TUNGSTEN SUBCATEGORY

(a) Tungstic Acid Rinse BAT

Pollutant or Pollutant Property	Maximum for Any One Day	Maximum for Monthly Average
Metric Units - mg/kg of tungstic acid (as W) produced English Units - lbs/million lbs of tungstic acid (as W) produced		
Cadmium	6.038	2.415
Chromium	11.170	4.529
*Lead	11.490	5.333
Nickel	16.610	11.170
Silver	8.755	3.623
Thallium	42.270	18.420
*Zinc	41.850	17.230
*Ammonia (as N)	5,469.000	2,404.000

(b) Acid Leach Wet Air Pollution Control BAT

Pollutant or Pollutant Property	Maximum for Any One Day	Maximum for Monthly Average
Metric Units - mg/kg of tungstic acid (as W) produced English Units - lbs/million lbs of tungstic acid (as W) produced		
Cadmium	0.527	0.211
Chromium	0.975	0.395
*Lead	1.003	0.466
Nickel	1.449	0.975
Silver	0.764	0.316
Thallium	3.689	1.607
*Zinc	3.653	1.504
*Ammonia (as N)	477.400	209.900

*Regulated Pollutant

TABLE X-4 (Continued)

BAT EFFLUENT LIMITATIONS FOR THE
PRIMARY TUNGSTEN SUBCATEGORY

(c) Alkali Leach Wash BAT

Pollutant or Pollutant Property	Maximum for Any One Day	Maximum for Monthly Average
Metric Units - mg/kg of sodium tungstate (as W) produced English Units - lbs/million lbs of sodium tungstate (as W) produced		
Cadmium	0.000	0.000
Chromium	0.000	0.000
*Lead	0.000	0.000
Nickel	0.000	0.000
Silver	0.000	0.000
Thallium	0.000	0.000
*Zinc	0.000	0.000
*Ammonia (as N)	0.000	0.000

(d) Alkali Leach Wash Condensate BAT

Pollutant or Pollutant Property	Maximum for Any One Day	Maximum for Monthly Average
Metric Units - mg/kg of sodium tungstate (as W) produced English Units - lbs/million lbs of sodium tungstate (as W) produced		
Cadmium		
Chromium		
*Lead	5.372	2.494
Nickel		
Silver		
Thallium		
*Zinc	19.570	8.057
*Ammonia (as N)	2,557.000	1,124.000

*Regulated Pollutant

TABLE X-4 (Continued)

BAT EFFLUENT LIMITATIONS FOR THE PRIMARY TUNGSTEN SUBCATEGORY

(e) Ion-Exchange Raffinate (Commingled with other Process or Nonprocess Waters) BAT

Pollutant or Pollutant Property	Maximum for Any One Day	Maximum for Monthly Average
Metric Units - mg/kg of ammonium tungstate (as W) produced English Units - lbs/million lbs of ammonium tungstate (as W) produced		
Cadmium	10.140	4.057
Chromium	18.760	7.606
*Lead	24.780	11.500
Nickel	27.890	18.760
Silver	14.710	6.085
Thallium	70.990	30.930
*Zinc	90.240	37.160
*Ammonia (as N)	11,790.000	5,185.000

(f) Ion-Exchange Raffinate (Not Commingled with other Process or Nonprocess Waters)[1] BAT

Pollutant or Pollutant Property	Maximum for Any One Day	Maximum for Monthly Average
Metric Units - mg/kg of ammonium tungstate (as W) produced English Units - lbs/million lbs of ammonium tungstate (as W) produced		
Cadmium		
Chromium		
*Lead	24.780	11.500
Nickel		
Silver		
Thallium		
*Zinc	90.240	37.160
*Ammonia (as N)	11,790.000	5,185.000

*Regulated Pollutant

[1]The effluent limitation for this pollutant does not apply if (a) the mother liquor feed to the ion exchange process or the raffinate from the ion exchange process contains sulfates at concentrations exceeding 1000 mg/l; (b) this mother liquor or raffinate is treated by ammonia steam stripping; and (c) such mother liquor or raffinate is not commingled with any other process or nonprocess waters prior to steam stripping for ammonia removal.

TABLE X-4 (Continued)

BAT EFFLUENT LIMITATIONS FOR THE
PRIMARY TUNGSTEN SUBCATEGORY

(g) Calcium Tungstate Precipitate Wash BAT

Pollutant or Pollutant Property	Maximum for Any One Day	Maximum for Monthly Average
Metric Units - mg/kg of calcium tungstate (as W) produced English Units - lbs/million lbs of calcium tungstate (as W) produced		
Cadmium	9.428	3.771
Chromium	17.440	7.071
*Lead	20.670	9.594
Nickel	25.930	17.440
Silver	13.670	5.657
Thallium	66.000	28.760
*Zinc	75.280	31.000
*Ammonia (as N)	9,838.000	4,325.000

(h) Crystallization and Drying of Ammonium Paratungstate BAT

Pollutant or Pollutant Property	Maximum for Any One Day	Maximum for Monthly Average
Metric Units - mg/kg of ammonium paratungstate (as W) produced English Units - lbs/million lbs of ammonium paratungstate (as W) produced		
Cadmium	0.000	0.000
Chromium	0.000	0.000
*Lead	0.000	0.000
Nickel	0.000	0.000
Silver	0.000	0.000
Thallium	0.000	0.000
*Zinc	0.000	0.000
*Ammonia (as N)	0.000	0.000

*Regulated Pollutant

TABLE X-4 (Continued)

BAT EFFLUENT LIMITATIONS FOR THE PRIMARY TUNGSTEN SUBCATEGORY

(i) Ammonium Paratungstate Conversion to Oxides Wet Air Pollution Control BAT

Pollutant or Pollutant Property	Maximum for Any One Day	Maximum for Monthly Average
Metric Units - mg/kg of tungstic oxide (as W) produced English Units - lbs/million lbs of tungstic oxide (as W) produced		
Cadmium	0.438	0.175
Chromium	0.810	0.329
*Lead	0.773	0.359
Nickel	1.205	0.810
Silver	0.635	0.263
Thallium	3.066	1.336
*Zinc	2.817	1.160
*Ammonia (as N)	368.200	161.900

(j) Ammonium Paratungstate Conversion to Oxides Water of Formation BAT

Pollutant or Pollutant Property	Maximum for Any One Day	Maximum for Monthly Average
Metric Units - mg/kg of tungstic oxide (as W) produced English Units - lbs/million lbs of tungstic oxide (as W) produced		
Cadmium	0.010	0.004
Chromium	0.019	0.008
*Lead	0.018	0.008
Nickel	0.028	0.019
Silver	0.015	0.006
Thallium	0.070	0.031
*Zinc	0.064	0.026
*Ammonia (as N)	8.398	3.692

* Regulated Pollutant

TABLE X-4 (Continued)

BAT EFFLUENT LIMITATIONS FOR THE
PRIMARY TUNGSTEN SUBCATEGORY

(k) Reduction to Tungsten Wet Air Pollution Control

Pollutant or Pollutant Property	Maximum for Any One Day	Maximum for Monthly Average
Metric Units - mg/kg of tungsten metal produced English Units - lbs/million lbs of tungsten metal produced		
Cadmium	0.616	0.246
Chromium	1.140	0.462
*Lead	0.862	0.400
Nickel	1.694	1.140
Silver	0.893	0.370
Thallium	4.312	1.879
*Zinc	3.142	1.294
*Ammonia (as N)	410.600	180.500

(l) Reduction to Tungsten Water of Formation BAT

Pollutant or Pollutant Property	Maximum for Any One Day	Maximum for Monthly Average
Metric Units - mg/kg of tungsten metal reduced English Units - lbs/million lbs of tungsten metal reduced		
Cadmium	0.098	0.039
Chromium	0.181	0.073
*Lead	0.137	0.064
Nickel	0.269	0.181
Silver	0.142	0.059
Thallium	0.685	0.298
*Zinc	0.499	0.205
*Ammonia (as N)	65.190	28.660

*Regulated Pollutant

TABLE X-4 (Continued)

BAT EFFLUENT LIMITATIONS FOR THE
PRIMARY TUNGSTEN SUBCATEGORY

(m) Tungsten Powder Acid Leach and Wash BAT

Pollutant or Pollutant Property	Maximum for Any One Day	Maximum for Monthly Average
Metric Units - mg/kg of tungsten metal produced English Units - lbs/million lbs of tungsten metal produced		
Cadmium	0.480	0.190
Chromium	0.888	0.360
*Lead	0.672	0.312
Nickel	1.320	0.888
Silver	0.696	0.288
Thallium	3.360	1.464
*Zinc	2.448	1.008
*Ammonia (as N)	319.900	140.700

(n) Molybdenum Sulfide Precipitation Wet Air Pollution Control BAT

Pollutant or Pollutant Property	Maximum for Any One Day	Maximum for Monthly Average
Metric Units - mg/kg of tungsten metal produced English Units - lbs/million lbs of tungsten metal produced		
Cadmium	0.000	0.000
Chromium	0.000	0.000
*Lead	0.000	0.000
Nickel	0.000	0.000
Silver	0.000	0.000
Thallium	0.000	0.000
*Zinc	0.000	0.000
*Ammonia (as N)	0.000	0.000

*Regulated Pollutant

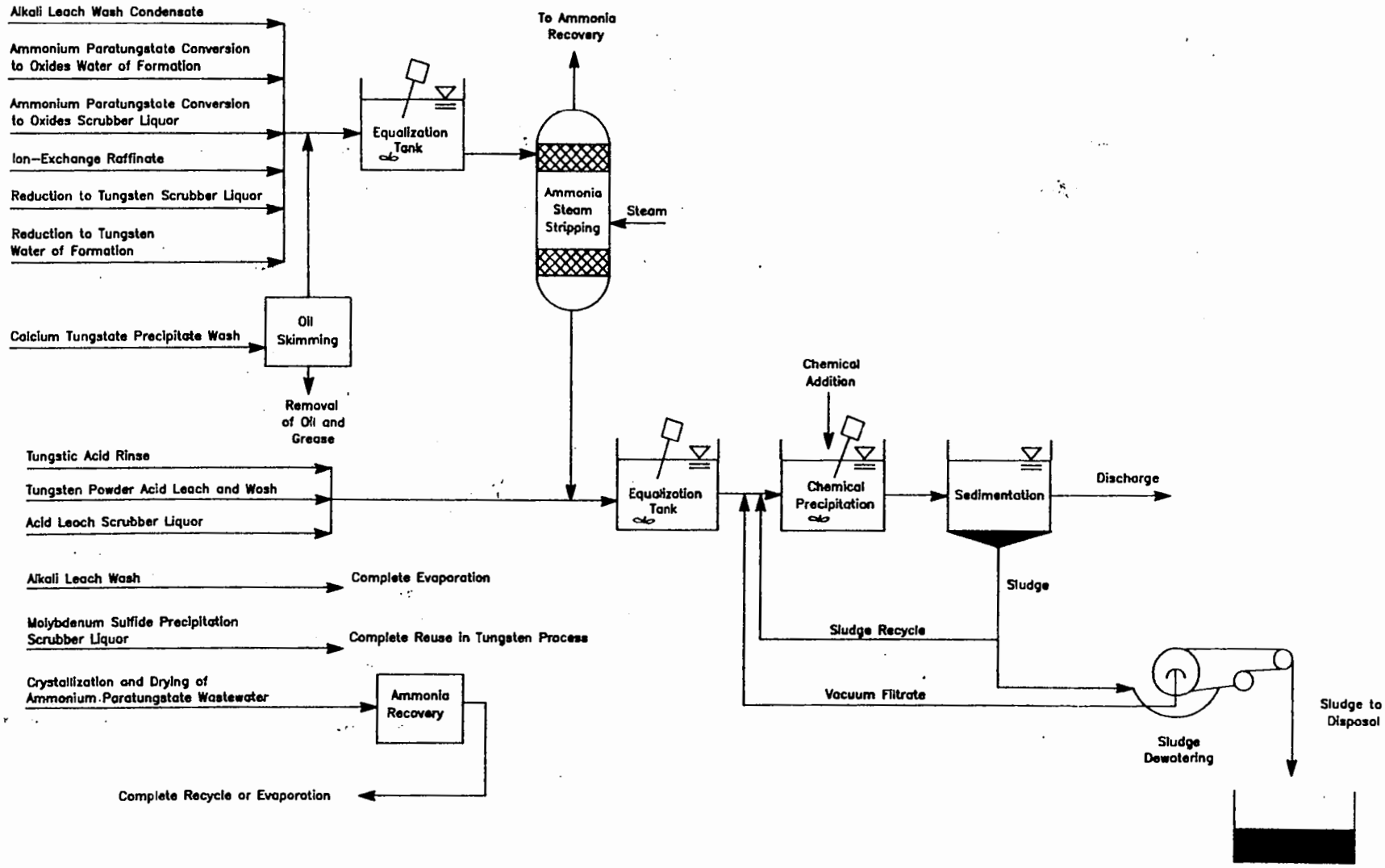

FIGURE X-1. BAT TREATMENT SCHEME OPTION A PRIMARY TUNGSTEN SUBCATEGORY

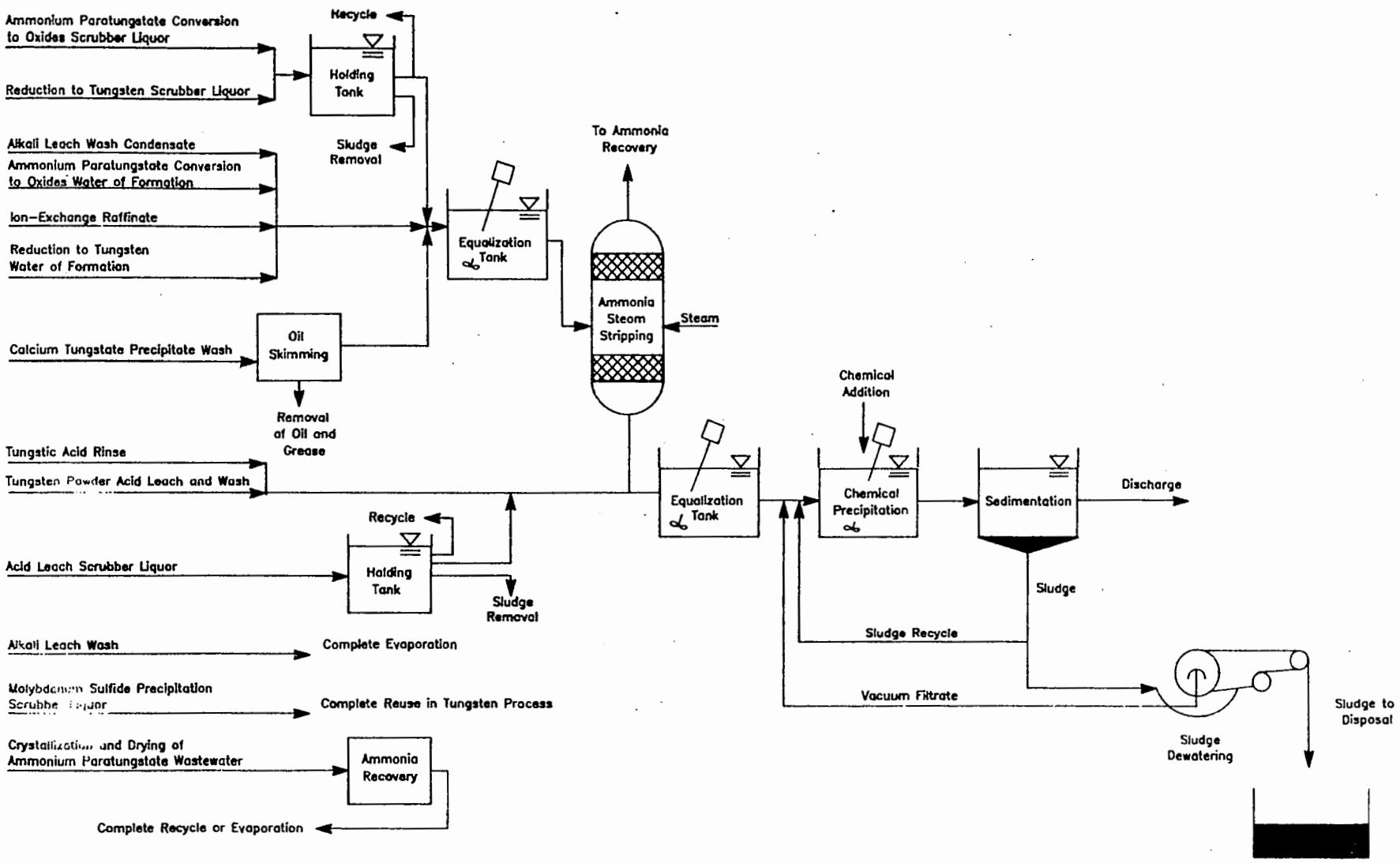

FIGURE X-2 BAT TREATMENT SCHEME OPTION 2

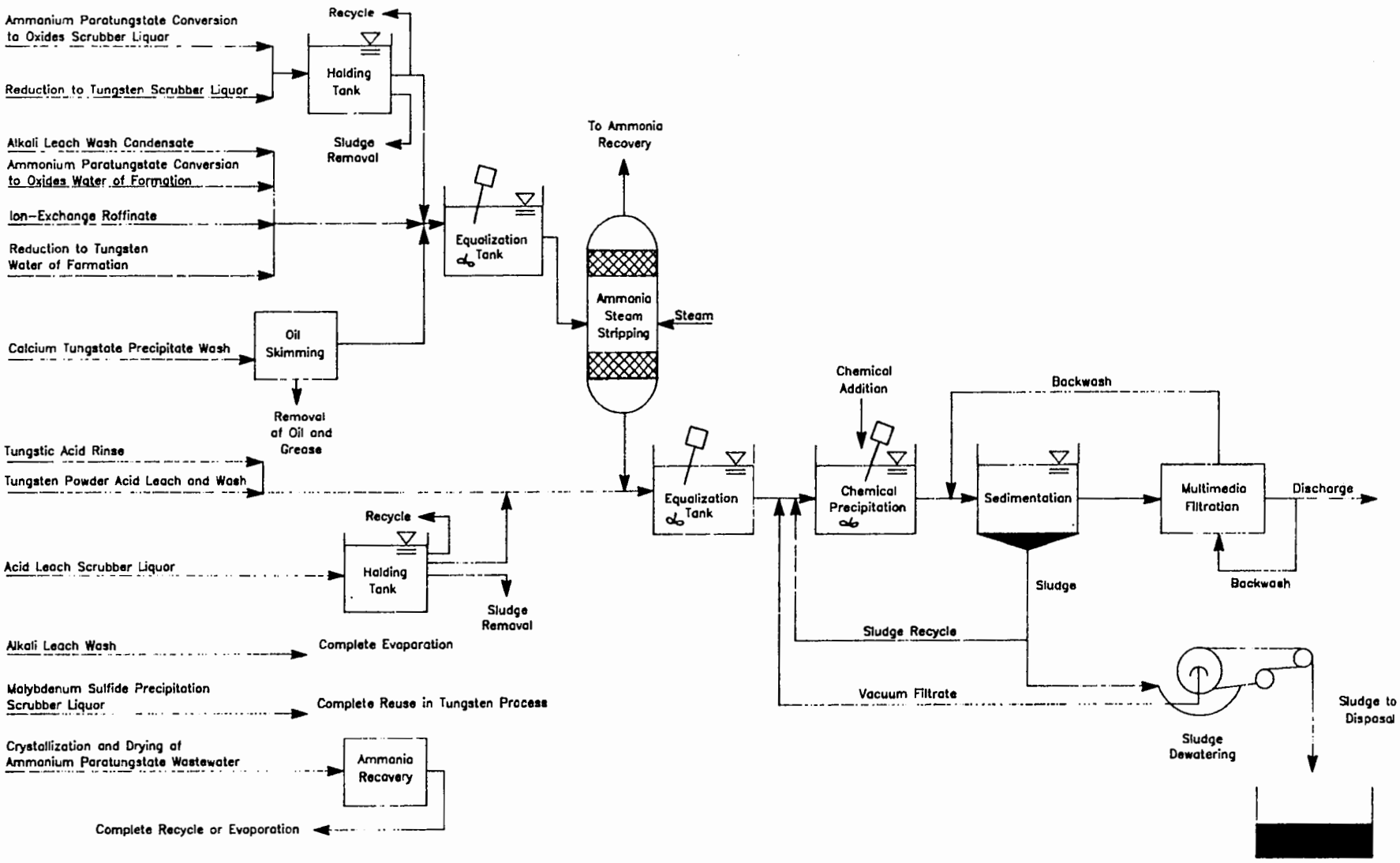

FIGURE X-3. BAT TREATMENT SCHEME OPTION C PRIMARY TUNGSTEN SUBCATEGORY

THIS PAGE INTENTIONALLY LEFT BLANK

SECTION XI

NEW SOURCE PERFORMANCE STANDARDS

This section describes the technologies for treatment of wastewater from new sources and presents mass discharge standards for regulatory pollutants for NSPS in the primary tungsten subcategory, based on the selected treatment technology. The basis for new source performance standards (NSPS) under Section 306 of the Act is the best available demonstrated technology (BDT). New plants have the opportunity to design the best and most efficient production processes and wastewater treatment technologies without facing the added costs and restrictions encountered in retrofitting an existing plant.

TECHNICAL APPROACH TO BDT

The best available demonstrated technology (BDT) for new source performance standards is equivalent to the best available technology (BAT) selected for currently existing primary tungsten plants. This result is a consequence of careful review by the Agency of a wide range of technical options for new source treatment systems. This review of the primary tungsten subcategory found no new, economically feasible, demonstrated technologies which could be considered an improvement over those chosen for consideration for BAT. Additionally, there was nothing found to indicate that the wastewater flows and characteristics of new plants would not be similar to those from existing plants, since the processes used by new sources are not expected to differ from those used at existing sources. Consequently, BAT production normalized discharge rates, which are based on the best existing practices of the subcategory, can also be applied to new sources. These rates are presented in Table XI-1 (page 3126).

Treatment technologies considered for the BDT options are identical to the treatment technologies considered for the BAT options. These options are:

OPTION A

- Preliminary treatment with oil skimming (where required)
- Preliminary treatment with ammonia steam stripping (where required)
- Lime precipitation and sedimentation

OPTION B

- Preliminary treatment with oil skimming (where required)
- Preliminary treatment with ammonia steam stripping (where required)
- Lime precipitation and sedimentation
- In-process flow reduction of acid leach, ammonium para-

tungstate conversion to oxides, and reduction to tungsten scrubber liquor

OPTION C

- o Preliminary treatment with oil skimming (where required)
- o Preliminary treatment with ammonia steam stripping (where required)
- o Lime precipitation and sedimentation
- o In-process flow reduction of acid leach, ammonium para-tungstate conversion to oxides, and reduction to tungsten scrubber liquor
- o Multimedia filtration

BDT OPTION SELECTION - PROPOSAL

EPA proposed that the best available demonstrated technology for the primary tungsten subcategory be equivalent to Option C (flow reduction, ammonia steam stripping, lime precipitation, sedimentation, and multimedia filtration).

The wastewater flow rates for BDT were the same as the BAT flow rates. Further flow reduction measures for BDT were not considered feasible, because dry scrubbing was not demonstrated for controlling emissions from acid leaching, APT conversion to oxides, and tungsten reduction furnaces. The nature of these emissions (acid fumes, hot particulate matter) technically precluded the use of dry scrubbers. Therefore, EPA included an allowance from this source at BDT equivalent to that proposed for BAT. EPA also did not believe that new plants could achieve any additional flow reduction beyond the 90 percent scrubber effluent recycle proposed for BAT.

Activated carbon technology (Option E) was also considered, however this technology was not necessary since toxic organic pollutants were not limited in this subcategory. Reverse osmosis in conjunction with multiple-effect evaporation (Option F) was considered for the purpose of achieving zero discharge of process wastewater; however, the Agency ultimately rejected this technology because it was determined that its performance for this specific purpose was not adequately demonstrated in this category nor was it clearly transferable from another category.

BPT OPTION SELECTION - PROMULGATION

EPA is promulgating best available demonstrated technology for the primary tungsten subcategory equivalent to Option C (flow reduction, oil skimming, ammonia steam stripping, lime precipitation, sedimentation, and multimedia filtration).The wastewater flow rates for BDT are the same as the BAT flow rates. The BDT flow rates are presented in Table XI-1 (page 3126). Additional flow reduction and more stringent treatment technologies are not demonstrated or readily transferable to the primary tungsten subcategory for the reasons stated at proposal.

REGULATED POLLUTANT PARAMETERS

The Agency has no reason to believe that the pollutants that will be found in treatable concentrations in processes within new sources will be any different than with existing sources. Accordingly, pollutants and pollutant parameters selected for limitation under NSPS, in accordance with the rationale of Sections VI and X, are identical to those selected for BAT. The conventional pollutant parameters TSS and pH are also selected for limitation.

NEW SOURCE PERFORMANCE STANDARDS

The NSPS discharge flows for each wastewater source are the same as the discharge rates for BAT and are shown in Table XI-1 (page 3126). The mass of pollutant allowed to be discharged per mass of product is calculated by multiplying the appropriate treatment performance concentration (mg/l) by the production normalized wastewater discharge flows (l/kkg). The results of these calculations are the production-based new source performance standards. These standards are presented in Table XI-2 (page 3128).

TABLE XI-1

NSPS WASTEWATER DISCHARGE RATES FOR THE PRIMARY TUNGSTEN SUBCATEGORY

Wastewater Stream	NSPS Normalized Discharge Rate l/kkg	gal/ton	Production Normalizing Parameter
Tungstic Acid Rinse Water	41,030	9,839	Tungstic acid (as W) produced
Acid Leach Wet Air Pollution Control	3,581	859	Tungstic acid (as W) produced
Alkali Leach Wash	0	0	Sodium tungstate (as W) produced
Alkali Leach Wash Condensate	19,180	4,599	Sodium Tungstate (as W) produced
Ion-Exchange Raffinate (commingled and not commingled with other process and nonprocess streams)	88,480	21,220	Ammonium tungstate (as W) produced
Calcium Tungstate Precipitate Wash	73,810	17,700	Calcium tungstate (as W) produced
Crystallization and Drying of Ammonium Paratungstate	0	0	Ammonium paratungstate (as W) produced
Ammonium Paratungstate Conversion to Oxides Wet Air Pollution Control	2,762	662	Tungstic oxide (as W) produced
Ammonium Paratungstate Conversion to Oxides Water of Formation	63	15	Tungstic oxide (WO_3) produced

TABLE XI-1 (Continued)

NSPS WASTEWATER DISCHARGE RATES FOR THE PRIMARY TUNGSTEN SUBCATEGORY

Wastewater Stream	NSPS Normalized Discharge Rate l/kkg	gal/ton	Production Normalization Parameter
Reduction to Tungsten Air Pollution Control	3,800	739	Tungsten metal produced
Reduction to Tungsten Water of Formation	489	117	Tungsten metal produced
Tungsten Powder Acid Leach and Wash	2,400	576	Tungsten metal produced
Molybdenum Sulfide Precipitation Wet Air Pollution Control	0	0	Tungsten metal produced

TABLE IX-2

NSPS FOR THE PRIMARY
TUNGSTEN SUBCATEGORY

(a) Tungstic Acid Rinse NSPS NSPS

Pollutant or Pollutant Property	Maximum for Any One Day	Maximum for Monthly Average
Metric Units - mg/kg of tungstic acid (as W) produced English Units - lbs/million lbs of tungstic acid (as W) produced		
Cadmium	6.038	2.415
Chromium	11.170	4.529
*Lead	11.490	5.333
Nickel	16.610	11.170
Silver	8.755	3.623
Thallium	42.270	18.420
*Zinc	41.850	17.230
*Ammonia (as N)	5,469.000	2,404.000
*TSS	615.400	492.300
*pH	Within the range of 7.0 to 10.0 at all times	

(b) Acid Leach Wet Air Pollution Control NSPS NSPS

Pollutant or Pollutant Property	Maximum for Any One Day	Maximum for Monthly Average
Metric Units - mg/kg of tungstic acid (as W) produced English Units - lbs/million lbs of tungstic acid (as W) produced		
Cadmium	0.527	0.211
Chromium	0.975	0.395
*Lead	1.003	0.466
Nickel	1.449	0.975
Silver	0.764	0.316
Thallium	3.689	1.607
*Zinc	3.653	1.504
*Ammonia (as N)	477.400	209.900
*TSS	53.720	42.970
*pH	Within the range of 7.0 to 10.0 at all times	

*Regulated Pollutant

TABLE IX -2 (Continued)

NSPS FOR THE PRIMARY
TUNGSTEN SUBCATEGORY

(c) Alkali Leach Wash NSPS

Pollutant or Pollutant Property	Maximum for Any One Day	Maximum for Monthly Average
Metric Units - mg/kg of sodium tungstate (as W) produced English Units - lbs/million lbs of sodium tungstate (as W) produced		
Cadmium	0.000	0.000
Chromium	0.000	0.000
*Lead	0.000	0.000
Nickel	0.000	0.000
Silver	0.000	0.000
Thallium	0.000	0.000
*Zinc	0.000	0.000
*Ammonia (as N)	0.000	0.000
*TSS	0.000	0.000
*pH	Within the range of 7.0 to 10.0 at all times	

(d) Alkali Leach Wash Condensate NSPS

Pollutant or Pollutant Property	Maximum for Any One Day	Maximum for Monthly Average
Metric Units - mg/kg of sodium tungstate (as W) produced English Units - lbs/million lbs of sodium tungstate (as W) produced		
Cadmium		
Chromium		
*Lead	5,372	2.494
Nickel		
Silver		
Thallium		
*Zinc	19.570	8.057
*Ammonia (as N)	2,557.000	1,124.000
*TSS	287.800	229.600
*pH	Within the range of 7.0 to 10.0 at all times	

*Regulated Pollutant

TABLE IX-2 (Continued)

NSPS FOR THE PRIMARY
TUNGSTEN SUBCATEGORY

(e) Ion-Exchange Raffinate (Commingled with other Process or Nonprocess Waters) NSPS

Pollutant or Pollutant Property	Maximum for Any One Day	Maximum for Monthly Average
Metric Units - mg/kg of ammonium tungstate (as W) produced English Units - lbs/million lbs of ammonium tungstate (as W) produced		
Cadmium	10.140	4.057
Chromium	18.760	7.606
*Lead	24.780	11.500
Nickel	27.890	18.760
Silver	14.710	6.085
Thallium	70.990	30.930
*Zinc	90.240	37.160
*Ammonia (as N)	11,790.000	5,185.000
*TSS	1,327.000	1,062.000
*pH	Within the range of 7.0 to 10.0 at all times	

(f) Ion-Exchange Raffinate (Not Commingled with other Process or Nonprocess Waters)[1] NSPS

Pollutant or Pollutant Property	Maximum for Any One Day	Maximum for Monthly Average
Metric Units - mg/kg of ammonium tungstate (as W) produced English Units - lbs/million lbs of ammonium tungstate (as W) produced		
Cadmium		
Chromium		
*Lead	24.780	11.500
Nickel		
Silver		
Thallium		
*Zinc	90.240	37.160
*Ammonia (as N)	11,790.000	5,185.000
*TSS	1,327.000	1,062.000
*pH	Within the range of 7.0 to 10.0 at all times	

*Regulated Pollutant

[1]The new source standard for this pollutant does not apply if (a) the mother liquor feed to the ion exchange process or the raffinate from the ion exchange process contains sulfates at concentrations exceeding 1000 mg/l; (b) this mother liquor or raffinate is treated by ammonia steam stripping; and (c) such mother liquor or raffinate is not commingled with any other process or nonprocess waters prior to steam stripping for ammonia removal.

TABLE IX-2 (Continued)

NSPS FOR THE PRIMARY TUNGSTEN SUBCATEGORY

(g) Calcium Tungstate Precipitate Wash NSPS

Pollutant or Pollutant Property	Maximum for Any One Day	Maximum for Monthly Average
Metric Units - mg/kg of calcium tungstate (as W) produced English Units - lbs/million lbs of calcium tungstate (as W) produced		
Cadmium	9.428	3.771
Chromium	17.440	7.071
*Lead	20.670	9.594
Nickel	25.930	17.446
Silver	13.670	5.657
Thallium	66.000	28.760
*Zinc	75.280	31.000
*Ammonia (as N)	9,838.000	4,325.000
*TSS	1,107.000	885.600
*pH	Within the range of 7.0 to 10.0 at all times	

(h) Crystallization and Drying of Ammonium Paratungstate NSPS

Pollutant or Pollutant Property	Maximum for Any One Day	Maximum for Monthly Average
Metric Units - mg/kg of ammonium paratungstate (as W) produced English Units - lbs/million lbs of ammonium paratungstate (as W) produced		
Cadmium	0.000	0.000
Chromium	0.000	0.000
*Lead	0.000	0.000
Nickel	0.000	0.000
Silver	0.000	0.000
Thallium	0.000	0.000
*Zinc	0.000	0.000
*Ammonia (as N)	0.000	0.000
*TSS	0.000	0.000
*pH	Within the range of 7.0 to 10.0 at all times	

*Regulated Pollutant

TABLE XI-2 (Continued)

NSPS FOR THE PRIMARY
TUNGSTEN SUBCATEGORY

(i) Ammonium Paratungstate Conversion to Oxides Wet Air Pollution Control NSPS

Pollutant or Pollutant Property	Maximum for Any One Day	Maximum for Monthly Average
Metric Units - mg/kg of tungstic oxide (as W) produced English Units - lbs/million lbs of tungstic oxide (as W) produced		
Cadmium	0.438	0.175
Chromium	0.810	0.329
*Lead	0.773	0.359
Nickel	1.205	0.810
Silver	0.635	0.263
Thallium	3.066	1.336
*Zinc	2.817	1.160
*Ammonia (as N)	368.200	161.900
*TSS	41.430	33.150
*pH	Within the range of 7.0 to 10.0 at all times	

(j) Ammonium Paratungstate Conversion to Oxides Water of Formation NSPS

Pollutant or Pollutant Property	Maximum for Any One Day	Maximum for Monthly Average
Metric Units - mg/kg of tungstic oxide (as W) produced English Units - lbs/million lbs of tungstic oxide (as W) produced		
Cadmium	0.010	0.004
Chromium	0.019	0.008
*Lead	0.018	0.008
Nickel	0.028	0.019
Silver	0.015	0.006
Thallium	0.070	0.031
*Zinc	0.064	0.026
*Ammonia (as N)	8.398	3.692
*TSS	0.945	0.756
*pH	Within the range of 7.0 to 10.0 at all times	

*Regulated Pollutant

TABLE IX-2 (Continued)

NSPS FOR THE PRIMARY
TUNGSTEN SUBCATEGORY

(k) Reduction to Tungsten Wet Air Pollution Control NSPS

Pollutant or Pollutant Property	Maximum for Any One Day	Maximum for Monthly Average
Metric Units - mg/kg of tungsten metal produced English Units - lbs/million lbs of tungsten metal produced		
Cadmium	0.616	0.246
Chromium	1.140	0.462
*Lead	0.862	0.400
Nickel	1.694	1.140
Silver	0.893	0.370
Thallium	4.312	1.879
*Zinc	3.142	1.294
*Ammonia (as N)	410.600	180.500
*TSS	46.200	36.960
*pH	Within the range of 7.0 to 10.0 at all times	

(l) Reduction to Tungsten Water of Formation NSPS

Pollutant or Pollutant Property	Maximum for Any One Day	Maximum for Monthly Average
Metric Units - mg/kg of tungsten metal produced English Units - lbs/million lbs of tungsten metal produced		
Cadmium	0.098	0.039
Chromium	0.181	0.073
*Lead	0.137	0.064
Nickel	0.269	0.181
Silver	0.142	0.059
Thallium	0.685	0.298
*Zinc	0.499	0.205
*Ammonia (as N)	65.190	28.660
*TSS	7.335	5.868
*pH	Within the range of 7.0 to 10.0 at all times	

*Regulated Pollutant

TABLE IX-2 (Continued)

NSPS FOR THE PRIMARY
TUNGSTEN SUBCATEGORY

(m) Tungsten Power Acid Leach and Wash NSPS

Pollutant or Pollutant Property	Maximum for Any One Day	Maximum for Monthly Average
Metric Units - mg/kg of tungsten metal produced English Units - lbs/million lbs of tungsten metal produced		
Cadmium	0.480	0.192
Chromium	0.888	0.360
*Lead	0.672	0.312
Nickel	1.320	0.888
Silver	0.696	0.288
Thallium	3.360	1.464
*Zinc	2.448	1.008
*Ammonia (as N)	319.900	140.700
*TSS	36.000	28.800
*pH	Within the range of 7.0 to 10.0 at all times	

(n) Molybdenum Sulfide Precipitation Wet Air Pollution Control NSPS

Pollutant or Pollutant Property	Maximum for Any One Day	Maximum for Monthly Average
Metric Units - mg/kg of tungsten metal produced English Units - lbs/million lbs of tungsten metal produced		
Cadmium	0.000	0.000
Chromium	0.000	0.000
*Lead	0.000	0.000
Nickel	0.000	0.000
Silver	0.000	0.000
Thallium	0.000	0.000
*Zinc	0.000	0.000
*Ammonia (as N)	0.000	0.000
*TSS	0.000	0.000
*pH	Within the range of 7.0 to 10.0 at all times	

*Regulated Pollutant

SECTION XII

PRETREATMENT STANDARDS

This section describes the control and treatment technologies for pretreatment of process wastewaters from existing sources and new sources in the primary tungsten subcategory. PSES are designed to prevent the discharge of pollutants which pass through, interfere with, or are otherwise incompatible with the operation of publicly owned treatment works (POTW). The Clean Water Act of 1977 requires pretreatment for pollutants, such as toxic metals, that limit POTW sludge management alternatives. Section 307(c) of the Act requires EPA to promulgate pretreatment standards for new sources (PSNS) at the same time that it promulgates NSPS. New indirect discharge facilities, like new direct discharge facilities, have the opportunity to incorporate the best available demonstrated technologies, including process changes, in-plant controls, and end-of-pipe treatment technologies, and to use plant site selection to ensure adequate treatment system installation. Pretreatment standards are to be technology based, analogous to the best available technology for removal of toxic pollutants. Pretreatment standards for regulated pollutants are presented based on the selected control and treatment technology.

TECHNICAL APPROACH TO PRETREATMENT

Before proposing and promulgating pretreatment standards, the Agency examines whether the pollutants discharged by the industry pass through the POTW or interfere with the POTW operation or its chosen sludge disposal practices. In determining whether pollutants pass through a well-operated POTW achieving secondary treatment, the Agency compares the percentage of a pollutant removed by POTW with the percentage removed by direct dischargers applying the best available technology economically achievable. A pollutant is deemed to pass through the POTW when the average percentage removed nationwide by well-operated POTW meeting secondary treatment requirements, is less than the percentage removed by direct dischargers complying with BAT effluent limitations guidelines for that pollutant. (See generally, 46 FR at 9415-16 (January 28, 1981).)

This definition of pass through satisfies two competing objectives set by Congress: (1) that standards for indirect dischargers be equivalent to standards for direct dischargers while at the same time, (2) that the treatment capability and performance of the POTW be recognized and taken into account in regulating the discharge of pollutants from indirect dischargers.

The Agency compares percentage removal rather than the mass or concentration of pollutants discharged because the latter would not take into account the mass of pollutants discharged to the POTW from non-industrial sources or the dilution of the pollutants in the POTW effluent to lower concentrations due to the addition of large amounts of non-industrial wastewater.

INDUSTRY COST AND POLLUTANT REMOVAL ESTIMATES

The industry cost and pollutant removal estimates of each treatment option were used to determine the most cost-effective option. The methodology applied in calculating pollutant removal estimates and plant compliance costs is discussed in Section X. Table XII-1 (page 3939) shows the estimated pollutant removal estimates for indirect dischargers. Compliance costs for indirect dischargers are presented in Table VIII-2 (page xxxx).

PRETREATMENT STANDARDS FOR EXISTING AND NEW SOURCES

Options for pretreatment of wastewaters from both existing and new sources are based on increasing the effectiveness of end-of-pipe treatment technologies. All in-plant changes and applicable end-of-pipe treatment processes have been discussed previously in Sections X and XI. The options for PSNS and PSES, therefore, are the same as the BAT options discussed in Section X.

A description of each option is presented in Section X, while a more detailed discussion, including pollutants controlled by each treatment process is presented in Section VII of the General Development Document.

Treatment technologies considered for the PSNS and PSES options are:

OPTION A

- Preliminary treatment with ammonia steam stripping (where required)
- Lime precipitation and sedimentation

OPTION B

- Preliminary treatment with ammonia steam stripping (where required)
- Lime precipitation and sedimentation
- In-process flow reduction of acid leach, ammonium para-tungstate conversion to oxides, and reduction to tungsten scrubber liquor

OPTION C

- Preliminary treatment with ammonia steam stripping (where required)
- Lime precipitation and sedimentation

- In-process flow reduction of acid leach, ammonium para-tungstate conversion to oxides, and reduction to tungsten scrubber liquor
- Multimedia filtration

PSNS AND PSES OPTION SELECTION

Option C (flow reduction, ammonia steam stripping, lime precipitation, sedimentation, and multimedia filtration) has been selected as the regulatory approach for pretreatment standards for new and existing sources (PSNS and PSES). Option C prevents pass-through and is equivalent to BAT treatment for direct dischargers. Additionally, Option C removes incremental amounts of toxic pollutants. Ammonia steam stripping is demonstrated at three primary tungsten facilities. Filtration is not demonstrated within the subcategory; however, it is demonstrated in six nonferrous metals manufacturing subcategories at 23 plants.

The wastewater discharge rates for both PSES and PSNS are identical to the BAT discharge rates for each waste stream. The PSES and PSNS discharge rates are shown in Table XII-2 (page 3140).

Implementation of the promulgated PSES limitations would remove annually an estimated 3,400 kg/yr of toxic pollutants and 63,320 kg/yr of ammonia over raw discharge. The final PSES effluent mass limitations will remove 91 kg/yr of toxic metals over the intermediate PSES option considered, which lacks filtration. Both options are economically achievable. The Agency believes the incremental removal justifies selection of filtration as part of PSES model technology. The estimated capital cost for achieving promulgated PSES is $0.568 million (March, 1982 dollars) and the estimated annual cost is $0.445 million.

The wastewater discharge rates for both PSES and PSNS are identical to the BAT discharge rates for each waste stream. The PSES and PSNS discharge rates are shown in Table XII-3 (page 3142).

REGULATED POLLUTANT PARAMETERS

Pollutants selected for limitation, in accordance with the rationale of Sections VI and X, are identical to those selected for limitation for BAT. It is necessary to promulgate PSES and PSNS to prevent the pass-through of lead, zinc, and ammonia, which are the limited pollutants. Limitations for selenium, although proposed, have not been promulgated because analytical data gathered since proposal at two primary tungsten plants have demonstrated that selenium is not found on a subcategory-wide basis (see Section VI).

PRETREATMENT STANDARDS

Pretreatment standards are based on the treatment performance concentrations from the selected treatment technology, (Option C), and the discharge rates determined in Section X for BAT. A mass of pollutant per mass of product (mg/kg) allocation is given for each subdivision within the subcategory. This pollutant allocation is based on the product of the treatable concentration from the promulgated treatment (mg/l) and the production normalized wastewater discharge rate (l/kkg). The achievable treatment concentrations for BAT are identical to those for PSES and PSNS. These concentrations are listed in Table XII-21 of the General Development Document. PSES and PSNS are presented in Tables XII-3 and XII-4 (pages 3142 and xxxx).

Table XII-1

POLLUTANT REMOVAL ESTIMATES FOR PRIMARY TUNGSTEN INDIRECT DISCHARGERS

POLLUTANT	TOTAL RAW WASTE (kg/yr)	OPTION A DISCHARGED (kg/yr)	OPTION A REMOVED (kg/yr)	OPTION B DISCHARGED (kg/yr)	OPTION B REMOVED (kg/yr)	OPTION C DISCHARGED (kg/yr)	OPTION C REMOVED (kg/yr)
Cadmium	26.7	14.8	11.9	8.0	18.7	5.0	21.7
Chromium	268.2	15.8	252.5	8.5	259.7	7.1	261.1
Lead	2,674.9	22.5	2,652.4	12.2	2,662.7	8.1	2,666.8
Nickel	133.7	133.7	0.0	75.3	58.5	22.4	111.3
Silver	38.8	18.8	20.0	10.2	28.6	7.1	31.7
Thallium	93.5	93.5	0.0	50.9	42.6	34.6	58.9
Zinc	267.5	61.9	205.6	33.6	233.9	23.4	244.1
TOTAL TOXIC METALS	3,503.3	360.9	3,142.3	198.6	3,304.7	107.7	3,395.6
Aluminum	501.4	420.2	81.1	227.8	273.6	151.5	349.8
Ammonia	66,577.1	6,003.2	60,573.9	3,254.4	63,322.7	3,254.4	63,322.7
Fluoride	397.8	397.8	0.0	397.8	0.0	397.8	0.0
Iron	6,741.6	76.9	6,664.7	41.7	6,699.9	28.5	6,713.2
TOTAL NONCONVENTIONALS	74,217.9	6,898.1	67,319.8	3,921.7	70,296.2	3,832.2	70,385.7
TSS	29,576.1	2,251.2	27,324.9	1,220.4	28,355.7	264.4	29,311.7
Oil & Grease	3,279.9	1,876.0	1,403.9	1,017.0	2,262.9	1,017.0	2,262.9
TOTAL CONVENTIONALS	32,856.0	4,127.2	28,728.8	2,237.4	30,618.6	1,281.4	31,574.6
TOTAL POLLUTANTS	110,577.2	11,386.3	99,190.9	6,357.7	104,219.5	5,221.3	105,355.9
FLOW (l/yr)		187,600,000		101,700,000		101,700,000	

NOTE: TOTAL TOXIC METALS = Cadmium + Chromium + Lead + Nickel + Silver + Thallium + Zinc
TOTAL NONCONVENTIONALS = Aluminum + Ammonia + Fluoride + Iron
TOTAL CONVENTIONALS = TSS + Oil & Grease
TOTAL POLLUTANTS = Total Toxic Metals + Total Nonconventionals + Total Conventionals

OPTION A = Ammonia Steam Stripping, Lime Precipitation, and Sedimentation
OPTION B = Option A, plus In-Process Flow Reduction
OPTION C = Option B, plus Multimedia Filtration

TABLE XII-2

PSES AND PSNS WASTEWATER DISCHARGE RATES FOR THE PRIMARY TUNGSTEN SUBCATEGORY

Wastewater Stream	PSES and PSNS Normalized Discharge Rate l/kkg	gal/ton	Production Normalizing Parameter
Tungstic Acid Rinse Water	41,030	9,839	Tungstic acid (as W) produced
Acid Leach Wet Air Pollution Control	3,581	859	Tungstic acid (as W) produced
Alkali Leach Wash	0	0	Sodium tungstate (as W) produced
Alkali Leach Wash Condensate	19,180	4,599	Sodium Tungstate (as W) produced
Ion-Exchange Raffinate (commingled and not commingled with other process and nonprocess streams)	88,480	21,220	Ammonium tungstate (as W) produced
Calcium Tungstate Precipitate Wash	73,810	17,700	Calcium tungstate (as W) produced
Crystallization and Drying of Ammonium Paratungstate	0	0	Ammonium paratungstate (as W) produced
Ammonium Paratungstate Conversion to Oxides Wet Air Pollution Control	2,762	662	Tungstic oxide (as W) produced
Ammonium Paratungstate Conversion to Oxides Water of Formation	63	15	Tungstic oxide (WO_3) produced

TABLE XII-2 (Continued)

PSES AND PSNS WASTEWATER DISCHARGE RATES FOR THE PRIMARY TUNGSTEN SUBCATEGORY

Wastewater Stream	PSES AND PSNS Normalized Discharge Rate l/kkg	gal/ton	Production Normalizing Parameter
Reduction to Tungsten Air Pollution Control	3,800	739	Tungsten metal produced
Reduction to Tungsten Water of Formation	489	117	Tungsten metal produced
Tungsten Powder Acid Leach and Wash	2,400	576	Tungsten metal produced
Molybdenum Sulfide Precipitation Wet Air Pollution Control	0	0	Tungsten metal produced

TABLE XII-3

PSES FOR THE
PRIMARY TUNGSTEN SUBCATEGORY

(a) Tungstic Acid Rinse PSES

Pollutant or Pollutant Property	Maximum for Any One Day	Maximum for Monthly Average
Metric Units - mg/kg of tungstic acid (as W) produced English Units - lbs/million lbs of tungstic acid (as W) produced		
Cadmium	6.038	2.415
Chromium	11.170	4.529
*Lead	11.490	5.333
Nickel	16.610	11.170
Silver	8.755	3.623
Thallium	42.270	18.420
*Zinc	41.850	17.230
*Ammonia (as N)	5,469.000	2,404.000

(b) Acid Leach Wet Air Pollution Control PSES

Pollutant or Pollutant Property	Maximum for Any One Day	Maximum for Monthly Average
Metric Units - mg/kg of tungstic acid (as W) produced English Units - lbs/million lbs of tungstic acid (as W) produced		
Cadmium	0.527	0.211
Chromium	0.975	0.395
*Lead	1.003	0.466
Nickel	1.449	0.975
Silver	0.764	0.316
Thallium	3.689	1.607
*Zinc	3.653	1.504
*Ammonia (as N)	477.400	209.900

*Regulated Pollutant

TABLE XII-3 (Continued)

PSES FOR THE
PRIMARY TUNGSTEN SUBCATEGORY

(c) Alkali Leach Wash PSES

Pollutant or Pollutant Property	Maximum for Any One Day	Maximum for Monthly Average
Metric Units - mg/kg of sodium tungstate produced English Units - lbs/million lbs of sodium tungstate produced		
Cadmium	0.000	0.000
Chromium	0.000	0.000
*Lead	0.000	0.000
Nickel	0.000	0.000
Silver	0.000	0.000
Thallium	0.000	0.000
*Zinc	0.000	0.000
*Ammonia (as N)	0.000	0.000

(d) Alkali Leach Wash Condensate PSES

Pollutant or Pollutant Property	Maximum for Any One Day	Maximum for Monthly Average
Metric Units - mg/kg of sodium tungstate (as W) produced English Units - lbs/million lbs of sodium tungstate (as W) produced		
Cadmium		
Chromium		
*Lead	5.372	2.494
Nickel		
Silver		
Thallium		
*Zinc	19.570	8.057
*Ammonia (as N)	2,557.000	1,124.000

*Regulated Pollutant

TABLE XII-3 (Continued)

PSES FOR THE
PRIMARY TUNGSTEN SUBCATEGORY

(e) Ion-Exchange Raffinate (Commingled with Other Process or Nonprocess Water) PSES

Pollutant or Pollutant Property	Maximum for Any One Day	Maximum for Monthly Average
Metric Units - mg/kg of ammonium tungstate (as W) produced English Units - lbs/million lbs of ammonium tungstate (as W) produced		
Cadmium	10.140	4.057
Chromium	18.760	7.606
*Lead	24.780	11.500
Nickel	27.890	18.760
Silver	14.710	6.085
Thallium	70.990	30.930
*Zinc	90.240	37.160
*Ammonia (as N)	11,790.000	5,185.000

(f) Ion-Exchange Raffinate (Not Commingled with Other Process or Nonprocess Water)[1] PSES

Pollutant or Pollutant Property	Maximum for Any One Day	Maximum for Monthly Average
Metric Units - mg/kg of ammonium tungstate (as W) produced English Units - lbs/million lbs of ammonium tungstate (as W) produced		
Cadmium		
Chromium		
*Lead	24.780	11.500
Nickel		
Silver		
Thallium		
*Zinc	90.240	37.160
*Ammonia (as N)	11,790.000	5,185.000

*Regulated Pollutant

[1]The pretreatment standard for this pollutant does not apply if (a) the mother liquor feed to the ion exchange process or the raffinate from the ion exchange process contains sulfates at concentrations exceeding 1000 mg/l; (b) this mother liquor or raffinate is treated by ammonia steam stripping; and (c) such mother liquor or raffinate is not commingled with any other process or nonprocess waters prior to steam stripping for ammonia removal.

TABLE XII-3 (Continued)

PSES FOR THE
PRIMARY TUNGSTEN SUBCATEGORY

(g) Calcium Tungstate Precipitate Wash PSES

Pollutant or Pollutant Property	Maximum for Any One Day	Maximum for Monthly Average
Metric Units - mg/kg of calcium tungstate (as W) produced English Units - lbs/million lbs of calcium tungstate (as W) produced		
Cadmium	9.428	3.771
Chromium	17.440	7.071
*Lead	20.670	9.594
Nickel	25.930	17.440
Silver	13.670	5.657
Thallium	66.000	28.760
*Zinc	75.280	31.000
*Ammonia (as N)	9,838.000	4,325.000

(h) Crystallization and Drying of Ammonium Paratungstate PSES

Pollutant or Pollutant Property	Maximum for Any One Day	Maximum for Monthly Average
Metric Units - mg/kg of ammonium paratungstate (as W) produced English Units - lbs/million lbs of ammonium paratungstate (as W) produced		
Cadmium	0.000	0.000
Chromium	0.000	0.000
*Lead	0.000	0.000
Nickel	0.000	0.000
Silver	0.000	0.000
Thallium	0.000	0.000
*Zinc	0.000	0.000
*Ammonia (as N)	0.000	0.000

*Regulated Pollutant

TABLE XII-3 (Continued)

PSES FOR THE
PRIMARY TUNGSTEN SUBCATEGORY

(i) Ammonium Paratungstate Conversion to Oxides Wet Air Pollution Control PSES

Pollutant or Pollutant Property	Maximum for Any One Day	Maximum for Monthly Average
Metric Units - mg/kg of tungstic oxide (as W) produced English Units - lbs/million lbs of tungstic oxide (as W) produced		
Cadmium	0.438	0.175
Chromium	0.810	0.329
*Lead	0.773	0.359
Nickel	1.205	0.810
Silver	0.635	0.263
Thallium	3.066	1.336
*Zinc	2.817	1.160
*Ammonia (as N)	368.200	161.900

(j) Ammonium Paratungstate Conversion to Oxides Water of Formation PSES

Pollutant or Pollutant Property	Maximum for Any One Day	Maximum for Monthly Average
Metric Units - mg/kg of tungstic oxide (as W) produced English Units - lbs/million lbs of tungstic oxide (as W) produced		
Cadmium	0.010	0.004
Chromium	0.019	0.008
*Lead	0.018	0.008
Nickel	0.028	0.019
Silver	0.015	0.006
Thallium	0.070	0.031
*Zinc	0.064	0.026
*Ammonia (as N)	8.398	3.692

*Regulated Pollutant

TABLE XII-3 (Continued)

PSES FOR THE
PRIMARY TUNGSTEN SUBCATEGORY

(k) Reduction to Tungsten Wet Air Pollution Control PSES

Pollutant or Pollutant Property	Maximum for Any One Day	Maximum for Monthly Average
Metric Units - mg/kg of tungsten metal produced English Units - lbs/million lbs of tungsten metal produced		
Cadmium	0.616	0.246
Chromium	1.140	0.462
*Lead	0.862	0.400
Nickel	1.694	1.140
Silver	0.893	0.370
Thallium	4.312	1.879
*Zinc	3.142	1.294
*Ammonia (as N)	410.600	180.500

(l) Reduction to Tungsten Water of Formation PSES

Pollutant or Pollutant Property	Maximum for Any One Day	Maximum for Monthly Average
Metric Units - mg/kg of tungsten metal produced English Units - lbs/million lbs of tungsten metal produced		
Cadmium	0.098	0.039
Chromium	0.181	0.073
*Lead	0.137	0.064
Nickel	0.269	0.181
Silver	0.142	0.059
Thallium	0.685	0.298
*Zinc	0.499	0.205
*Ammonia (as N)	65.190	28.660

*Regulated Pollutant

TABLE XII-3 (Continued)

PSES FOR THE
PRIMARY TUNGSTEN SUBCATEGORY

(m) Tungsten Powder Acid Leach and Wash PSES

Pollutant or Pollutant Property	Maximum for Any One Day	Maximum for Monthly Average
Metric Units - mg/kg of tungsten metal produced English Units - lbs/million lbs of tungsten metal produced		
Cadmium	0.480	0.190
Chromium	0.888	0.360
*Lead	0.672	0.312
Nickel	1.320	0.888
Silver	0.696	0.288
Thallium	3.360	1.464
*Zinc	2.448	1.008
*Ammonia (as N)	319.900	140.700

(n) Molybdenum Sulfide Precipitation Wet Air Pollution Control PSES

Pollutant or Pollutant Property	Maximum for Any One Day	Maximum for Monthly Average
Metric Units - mg/kg of tungsten metal produced English Units - lbs/million lbs of tungsten metal produced		
Cadmium	0.000	0.000
Chromium	0.000	0.000
*Lead	0.000	0.000
Nickel	0.000	0.000
Silver	0.000	0.000
Thallium	0.000	0.000
*Zinc	0.000	0.000
*Ammonia (as N)	0.000	0.000

TABLE XII-4

PSNS FOR THE
PRIMARY TUNGSTEN SUBCATEGORY

(a) Tungstic Acid Rinse PSNS

Pollutant or Pollutant Property	Maximum for Any One Day	Maximum for Monthly Average
Metric Units - mg/kg of tungstic acid (as W) produced English Units - lbs/million lbs of tungstic acid (as W) produced		
Cadmium	6.038	2.415
Chromium	11.170	4.529
*Lead	11.490	5.333
Nickel	16.610	11.170
Silver	8.755	3.623
Thallium	42.270	18.420
*Zinc	41.850	17.230
*Ammonia (as N)	5,469.000	2,404.000

(b) Acid Leach Wet Air Pollution Control PSNS

Pollutant or Pollutant Property	Maximum for Any One Day	Maximum for Monthly Average
Metric Units - mg/kg of tungstic acid (as W) produced English Units - lbs/million lbs of tungstic acid (as W) produced		
Cadmium	0.527	0.211
Chromium	0.975	0.395
*Lead	1.003	0.466
Nickel	1.449	0.975
Silver	0.764	0.316
Thallium	3.689	1.607
*Zinc	3.653	1.504
*Ammonia (as N)	477.400	209.900

*Regulated Pollutant

TABLE XII-4 (Continued)

PSNS FOR THE
PRIMARY TUNGSTEN SUBCATEGORY

(c) Alkali Leach Wash PSNS

Pollutant or Pollutant Property	Maximum for Any One Day	Maximum for Monthly Average
Metric Units - mg/kg of sodium tungstate (as W) produced English Units - lbs/million lbs of sodium tungstate (as W) produced		
Cadmium	0.000	0.000
Chromium	0.000	0.000
*Lead	0.000	0.000
Nickel	0.000	0.000
Silver	0.000	0.000
Thallium	0.000	0.000
*Zinc	0.000	0.000
*Ammonia (as N)	0.000	0.000

(d) Alkali Leach Wash Condensate PSNS

Pollutant or Pollutant Property	Maximum for Any One Day	Maximum for Monthly Average
Metric Units - mg/kg of sodium tungstate (as W) produced English Units - lbs/million lbs of sodium tungstate (as W) produced		
Cadmium		
Chromium		
*Lead	5.372	2.494
Nickel		
Silver		
Thallium		
*Zinc	19.570	8.057
*Ammonia (as N)	2,557.000	1,124.000

*Regulated Pollutant

(e) Ion-Exchange Raffinate (Commingled with Other Process or Nonprocess Waters) PSNS

Pollutant or Pollutant Property	Maximum for Any One Day	Maximum for Monthly Average
Metric Units - mg/kg of ammonium tungstate (as W) produced English Units - lbs/million lbs of ammonium tungstate (as W) produced		
Cadmium	10.140	4.057
Chromium	18.760	7.606
*Lead	24.780	11.500
Nickel	27.890	18.760
Silver	14.710	6.085
Thallium	70.990	30.930
*Zinc	90.240	37.160
*Ammonia (as N)	11,790.000	5,185.000

(f) Ion-Exchange Raffinate (Not Commingled with Other Process or Nonprocess Waters) PSNS

Pollutant or Pollutant Property	Maximum for Any One Day	Maximum for Monthly Average
Metric Units - mg/kg of ammonium tungstate (as W) produced English Units - lbs/million lbs of ammonium tungstate (as W) produced		
Cadmium		
Chromium		
*Lead	24.780	11.500
Nickel		
Silver		
Thallium		
*Zinc	90.240	37.160
*Ammonia (as N)	11,790.000	5,185.000

*Regulated Pollutant

[1]The pretreatment standard for this pollutant does not apply if (a) the mother liquor feed to the ion exchange process or the raffinate from the ion exchange process contains sulfates at concentrations exceeding 1000 mg/l; (b) this mother liquor or raffinate is treated by ammonia steam stripping; and (c) such mother liquor or raffinate is not commingled with any other process or nonprocess waters prior to steam stripping for ammonia removal.

TABLE XII-4 (Continued)

PSNS FOR THE
PRIMARY TUNGSTEN SUBCATEGORY

(g) Calcium Tungstate Precipitate Wash PSNS

Pollutant or Pollutant Property	Maximum for Any One Day	Maximum for Monthly Average
Metric Units - mg/kg of calcium tungstate (as W) produced English Units - lbs/million lbs of calcium tungstate (as W) produced		
Cadmium	9.428	3.771
Chromium	17.440	7.071
*Lead	20.670	9.594
Nickel	25.930	17.440
Silver	13.670	5.657
Thallium	66.000	28.760
*Zinc	75.280	31.000
*Ammonia (as N)	9,838.000	4,325.000

(h) Crystallization and Drying of Ammonium Paratungstate PSNS

Pollutant or Pollutant Property	Maximum for Any One Day	Maximum for Monthly Average
Metric Units - mg/kg of ammonium paratungstate (as W) produced English Units - lbs/million lbs of ammonium paratungstate (as W) produced		
Cadmium	0.000	0.000
Chromium	0.000	0.000
*Lead	0.000	0.000
Nickel	0.000	0.000
Silver	0.000	0.000
Thallium	0.000	0.000
*Zinc	0.000	0.000
*Ammonia (as N)	0.000	0.000

*Regulated Pollutant

TABLE XII-4 (Continued)

PSNS FOR THE
PRIMARY TUNGSTEN SUBCATEGORY

(i) Ammonium Paratungstate Conversion to Oxides Wet Air Pollution Control PSNS

Pollutant or Pollutant Property	Maximum for Any One Day	Maximum for Monthly Average
Metric Units - mg/kg of tungstic oxide (as W) produced English Units - lbs/million lbs of tungstic oxide (as W) produced		
Cadmium	0.438	0.175
Chromium	0.810	0.329
*Lead	0.773	0.359
Nickel	1.205	0.810
Silver	0.635	0.263
Thallium	3.066	1.336
*Zinc	2.817	1.160
*Ammonia (as N)	368.200	161.900

(j) Ammonium Paratungstate Conversion to Oxides Water of Formation PSNS

Pollutant or Pollutant Property	Maximum for Any One Day	Maximum for Monthly Average
Metric Units - mg/kg of tungstic oxide (as W) produced English Units - lbs/million lbs of tungstic oxide (as W) produced		
Cadmium	0.010	0.004
Chromium	0.019	0.008
*Lead	0.018	0.008
Nickel	0.028	0.019
Silver	0.015	0.006
Thallium	0.070	0.031
*Zinc	0.064	0.026
*Ammonia (as N)	8.398	3.692

*Regulated Pollutant

TABLE XII-4 (Continued)

PSNS FOR THE
PRIMARY TUNGSTEN SUBCATEGORY

(k) Reduction to Tungsten Wet Air Pollution Control PSNS

Pollutant or Pollutant Property	Maximum for Any One Day	Maximum for Monthly Average
Metric Units - mg/kg of tungsten metal produced English Units - lbs/million lbs of tungsten metal produced		
Cadmium	0.616	0.246
Chromium	1.140	0.462
*Lead	0.862	0.400
Nickel	1.694	1.140
Silver	0.893	0.370
Thallium	4.312	1.879
*Zinc	3.142	1.294
*Ammonia (as N)	410.600	180.500

(l) Reduction to Tungsten Water of Formation PSNS

Pollutant or Pollutant Property	Maximum for Any One Day	Maximum for Monthly Average
Metric Units - mg/kg of tungsten metal produced English Units - lbs/million lbs of tungsten metal produced		
Cadmium	0.098	0.039
Chromium	0.181	0.073
*Lead	0.137	0.064
Nickel	0.269	0.181
Silver	0.142	0.059
Thallium	0.685	0.298
*Zinc	0.499	0.205
*Ammonia (as N)	65.190	28.660

*Regulated Pollutant

TABLE XII-4 (Continued)

PSNS FOR THE
PRIMARY TUNGSTEN SUBCATEGORY

(m) Tungsten Powder Acid Leach and Wash PSNS

Pollutant or Pollutant Property	Maximum for Any One Day	Maximum for Monthly Average
Metric Units - mg/kg of tungsten metal produced English Units - lbs/million lbs of tungsten metal produced		
Cadmium	0.480	0.190
Chromium	0.888	0.360
*Lead	0.672	0.312
Nickel	1.320	0.888
Silver	0.696	0.288
Thallium	3.360	1.464
*Zinc	2.448	1.008
*Ammonia (as N)	319.900	140.700

(n) Molybdenum Sulfide Precipitation Wet Air Pollution Control PSNS

Pollutant or Pollutant Property	Maximum for Any One Day	Maximum for Monthly Average
Metric Units - mg/kg of tungsten metal produced English Units - lbs/million lbs of tungsten metal produced		
Cadmium	0.000	0.000
Chromium	0.000	0.000
*Lead	0.000	0.000
Nickel	0.000	0.000
Silver	0.000	0.000
Thallium	0.000	0.000
*Zinc	0.000	0.000
*Ammonia (as N)	0.000	0.000

*Regulated Pollutant

THIS PAGE INTENTIONALLY LEFT BLANK

SECTION XIII

BEST CONVENTIONAL POLLUTANT CONTROL TECHNOLOGY

EPA is not promulgating best conventional pollutant control technology (BCT) for the primary tungsten subcategory at this time.

THIS PAGE INTENTIONALLY LEFT BLANK

Pages 3159 and 3160 are omitted.

NONFERROUS METALS MANUFACTURING POINT SOURCE CATEGORY

DEVELOPMENT DOCUMENT SUPPLEMENT

for the

Secondary Tungsten and Cobalt Subcategory

William K. Reilly
Administrator

Rebecca Hanmer
Acting Assistant Administrator for Water

Martha Prothro, Director
Office of Water Regulations and Standards

Thomas P. O'Farrell, Director
Industrial Technology Division

Ernst P. Hall, P.E., Chief
Metals Industry Branch
and
Technical Project Officer

May 1989

U.S. Environmental Protection Agency
Office of Water
Office of Water Regulations and Standards
Industrial Technology Division
Washington, D. C. 20460

3161

SECONDARY TUNGSTEN AND COBALT SUBCATEGORY

TABLE OF CONTENTS

Section		Page
I	SUMMARY	3171
II	CONCLUSIONS	3173
III	SUBCATEGORY PROFILE	3193
	Description of Secondary Tungsten and Cobalt Production	3193
	Raw Materials	3193
	Tungsten Recovery From Scrap	3193
	Synthetic Scheelite Production	3194
	Tungsten Carbide Recovery From Scrap	3194
	Cobalt Recovery From Sludges and Solutions	3195
	Cobalt Production Via Cobalt Hydroxide	3195
	Cobalt Dichloride Production	3195
	Cobalt Production From Cobalt Oxylate	3196
	Process Wastewater Sources	3196
	Other Wastewater Sources	3196
	Age, Production, and Process Profile	3196
IV	SUBCATEGORIZATION	3205
	Factors Considered in Subdividing the Secondary Tungsten and Cobalt Subcategory	3205
	Other Factors	3206
	Production Normalizing Parameters	3206
V	WATER USE AND WASTEWATER CHARACTERISTICS	3209
	Wastewater Flow Rates	3210
	Wastewater Characteristics Data	3211
	Data Collection Portfolios	3211
	Field Sampling Data	3211
	Wastewater Characteristics and Flows by Subdivision	3213
	Tungsten Detergent Wash and Rinse	3213
	Tungsten Leaching Acid	3213
	Tungsten Post-Leaching Wash and Rinse	3213
	Synthetic Scheelite Filtrate	3213
	Tungsten Carbide Leaching Wet Air Pollution Control	3214
	Tungsten Carbide Wash Water	3214
	Cobalt Sludge Leaching Wet Air Pollution Control	3215
	Crystallization Decant	3215
	Acid Wash Decant	3215
	Cobalt Hydroxide Filtrate	3216
	Cobalt Hydroxide Filter Cake Wash	3216

TABLE OF CONTENTS (Continued)

Section		Page
VI	SELECTION OF POLLUTANT PARAMETERS	3259
	Conventional and Nonconventional Pollutant Parameters Selected	3259
	Toxic Priority Pollutants	3260
	Toxic Pollutants Never Detected	3261
	Toxic Pollutants Present Below Concentrations Achievable by Treatment	3261
	Toxic Pollutants Detected in a Small Number of Sources	3261
	Toxic Pollutants Selected for Further Consideration in Limitations and Standards	3262
VII	CONTROL AND TREATMENT TECHNOLOGIES	3269
	Current Control and Treatment Practices	3269
	Tungsten Detergent Wash and Rinse	3269
	Tungsten Leaching Acid	3269
	Tungsten Post-Leaching Wash and Rinse	3270
	Synthetic Scheelite Filtrate	3270
	Tungsten Carbide Leaching Wet Air Pollution Control	3270
	Tungsten Carbide Wash Water	3270
	Cobalt Sludge Leaching Wet Air Pollution Control	3270
	Crystallization Decant	3270
	Acid Wash Decant	3271
	Cobalt Hydroxide Filtrate	3271
	Cobalt Hydroxide Filter Cake Wash	3271
	Control and Treatment Options	3271
	Option A	3271
	Option C	3272
VIII	COSTS, ENERGY, AND NONWATER QUALITY ASPECTS	3273
	Treatment Options for Existing Sources	3273
	Option A	3273
	Option C	3273
	Cost Methodology	3273
	Energy Requirements	3274
	Solid Waste	3274
	Air Pollution	3275

TABLE OF CONTENTS (Continued)

Section		Page
IX	BEST PRACTICABLE CONTROL TECHNOLOGY CURRENTLY AVAILABLE	3279
	Technical Approach to BPT	3279
	Industry Cost and Pollutant Removal Estimates	3279
	BPT Option Selection	3279
	Wastewater Discharge Rates	3281
	Tungsten Detergent Wash and Rinse	3281
	Tungsten Leaching Acid	3281
	Tungsten Post-Leaching Wash and Rinse	3281
	Synthetic Scheelite Filtrate	3281
	Tungsten Carbide Leaching Wet Air Pollution Control	3282
	Tungsten Carbide Wash Water	3282
	Cobalt Sludge Leaching Wet Air Pollution Control	3282
	Crystallization Decant	3282
	Acid Wash Decant	3282
	Cobalt Hydroxide Filtrate	3283
	Cobalt Hydroxide Filter Cake Wash	3283
	Regulated Pollutant Parameters	3283
	Effluent Limitations	3283
X	BEST AVAILABLE TECHNOLOGY ECONOMICALLY ACHIEVABLE	3293
	Technical Approach to BAT	3293
	Option A	3294
	Option C	3294
	Industry Costs and Pollutant Removal Estimates	3294
	Pollutant Removal Estimates	3294
	Compliance Costs	3295
	BAT Option Selection - Proposal	3295
	BAT Option Selection - Promulgation	3296
	Amended Regulation	3296
	Wastewater Discharge Rates	3297
	Regulated Pollutant Parameters	3297
	Effluent Limitations	3299
XI	NEW SOURCE PERFORMANCE STANDARDS	3311
	Technical Approach to NSPS	3311
	NSPS Option Selection	3312
	Regulated Pollutant Parameters	3312
	New Source Performance Standards	3312

TABLE OF CONTENTS (Continued)

Section		Page
XII	PRETREATMENT STANDARDS	3321
	Technical Approach to Pretreatment	3321
	Pretreatment Standards for New Sources	3321
	PSNS Option Selection	3322
	Regulated Pollutant Parameters	3322
	Pretreatment Standards	3323
XIII	BEST CONVENTIONAL POLLUTANT CONTROL TECHNOLOGY	3339

LIST OF TABLES

Table	Title	Page
III-1	Initial Operating Year (Range) Summary of Plants in the Secondary Tungsten and Cobalt Subcategory By Discharge Type	3198
III-2	Production Ranges for the Secondary Tungsten and Cobalt Subcategory	3199
III-3	Summary of Secondary Tungsten and Cobalt Subcategory Associated Waste Streams	3200
V-1	Water Use and Discharge Rate for Tungsten Detergent Wash and Rinse	3217
V-2	Water Use and Discharge Rate for Tungsten Leaching Acid	3217
V-3	Water Use and Discharge Rate for Tungsten Post-Leaching Wash and Rinse	3217
V-4	Water Use and Discharge Rate for Synthetic Scheelite Filtrate	3218
V-5	Water Use and Discharge Rate for Tungsten Carbide Leaching Wet Air Pollution Control	3218
V-6	Water Use and Discharge Rate for Tungsten Carbide Wash Water	3218
V-7	Water Use and Discharge Rate for Cobalt Sludge Leaching Wet Air Pollution Control	3219
V-8	Water Use and Discharge Rate for Crystallizer Decant	3219
V-9	Water Use and Discharge Rate for Acid Wash Decant	3219
V-10	Water Use and Discharge Rate for Cobalt Hydroxide Filtrate	3220
V-11	Water Use and Discharge Rate for Cobalt Hydroxide	3220
V-12	Secondary Tungsten and Cobalt Subcategory Tungsten Detergent Wash and Rinse Raw Wastewater Sampling Data	3221

LIST OF TABLES (Continued)

Table	Title	Page
V-13	Secondary Tungsten and Cobalt Subcategory Tungsten Leaching Acid Raw Wastewater Sampling Data	3226
V-14	Secondary Tungsten and Cobalt Subcategory Tungsten Post-Leaching Wash and Rinse Raw Wastewater Sampling Data	3230
V-15	Secondary Tungsten and Cobalt Subcategory Wastewater Storage - Crystallization and Acid Wash Decants, and Cobalt Sludge Leaching Wet Air Pollution Control Raw Wastewater Sampling Data	3234
V-16	Secondary Tungsten and Cobalt Subcategory Crystallization Decant Raw Wastewater Sampling Data	3236
V-17	Secondary Tungsten and Cobalt Subcategory Acid Wash Decant Raw Wastewater Sampling Data	3238
V-18	Secondary Tungsten and Cobalt Subcategory Cobalt Hydroxide Filtrate Raw Wastewater Sampling Data	3243
V-19	Secondary Tungsten and Cobalt Subcategory Cobalt Hydroxide Filter Cake Wash Raw Wastewater Sampling Data	3245
V-20	Secondary Tungsten and Cobalt Subcategory Treatment Plant Sampling Data - Plant A	3247
V-21	Secondary Tungsten and Cobalt Subcategory Treatment Plant Sampling Data - Plant B	3252
VI-1	Frequency of Occurrence of Toxic Pollutants Secondary Tungsten and Cobalt Subcategory	3264
VI-2	Toxic Pollutants Never Detected	3265
VIII-1	Cost of Compliance for the Secondary Tungsten and Cobalt Subcategory Direct Dischargers	3276
VIII-2	Cost of Compliance for the Secondary Tungsten and Cobalt Subcategory Indirect Dischargers	3276

LIST OF TABLES (Continued)

Table	Title	Page
IX-1	BPT Wastewater Discharge Rates for the Secondary Tungsten and Cobalt Subcategory	3285
IX-2	BPT Mass Limitations for the Secondary Tungsten and Cobalt Subcategory	3286
X-1	Pollutant Removal Estimates for Direct Dischargers in the Secondary Tungsten and Cobalt Subcategory	3308
X-2	Cost of Compliance for the Secondary Tungsten and Cobalt Subcategory Direct Dischargers	3301
X-3	BAT Wastewater Discharge Rates for the Secondary Tungsten and Cobalt Subcategory	3302
X-4	BAT Limitations for the Secondary Tungsten and Cobalt Subcategory	3305
XI-1	NSPS Wastewater Discharge Rates for the Secondary Tungsten and Cobalt Subcategory	3313
XI-2	NSPS for the Secondary Tungsten and Cobalt Subcategory	3314
XII-1	PSES and PSNS Wastewater Discharge Rates for the Secondary Tungsten and Cobalt Subcategory	3324
XII-2	Cost of Compliance for the Secondary Tungsten and Cobalt Subcategory Indirect Dischargers	3325
XII-3	PSNS for the Secondary Tungsten and Cobalt Subcategory	3326
XII-4	PSNS for the Secondary Tungsten and Cobalt Subcategory	3332

LIST OF FIGURES

Figure	Title	Page
III-1	Secondary Tungsten and Cobalt Production Processes	3201
III-2	Geographic Locations of Secondary Tungsten and Cobalt Subcategory Plants	3204
IX-1	BPT Treatment Scheme for the Secondary Tungsten and Cobalt Subcategory	3292
X-1	BAT Treatment Scheme for Option A	3309
X-2	BAT Treatment Scheme for Option C	3310

SECTION I

SUMMARY

This document provides the technical basis for promulgating effluent limitations based on best practicable technology (BPT) and best available technology (BAT) for existing direct dischargers, standards of performance for new source direct dischargers (NSPS), pretreatment standards for existing indirect dischargers (PSES), and pretreatment standards for new indirect dischargers (PSNS) for plants in the secondary tungsten and cobalt subcategory.

The secondary tungsten and cobalt subcategory consists of six plants. Four of the six plants discharge directly to rivers, lakes or streams, and one plant achieves zero discharge of process wastewater. One plant in this subcategory discharges to a publicly owned treatment works.

EPA first studied the secondary tungsten and cobalt subcategory to determine whether differences in raw materials, final products, manufacturing processes, equipment, age and size of plants, or water usage required the development of separate effluent limitations and standards for different segments of the subcategory. This involved a detailed analysis of wastewater discharge and treated effluent characteristics, including the sources and volume of water used, the processes used, the sources of pollutants and wastewaters in the plant, and the constituents of wastewaters, including priority pollutants. As a result, 11 subdivisions or building blocks have been identified for this subcategory that warrant separate effluent limitations. These include:

1. Tungsten detergent wash and rinse,
2. Tungsten leaching acid,
3. Tungsten post-leaching wash and rinse,
4. Synthetic scheelite filtrate,
5. Tungsten carbide leaching wet air pollution control,
6. Tungsten carbide wash water,
7. Cobalt sludge leaching wet air pollution control,
8. Crystallization decant,
9. Acid wash decant,
10. Cobalt hydroxide filtrate, and
11. Cobalt hydroxide filter cake wash.

EPA also identified several distinct control and treatment technologies (both in-plant and end-of-pipe) applicable to the secondary tungsten and cobalt subcategory. The Agency analyzed both historical and newly generated data on the performance of these technologies, including their nonwater quality environmental impacts and air quality, solid waste generation, and energy requirements. EPA also studied various flow reduction techniques reported in the data collection portfolios (dcp) and plant visits.

Engineering costs were prepared for each of the control and treatment options considered for the subcategory. These costs were then used by the Agency to estimate the impact to implementing the various options on the subcategory. For each control and treatment option that the Agency found to be most effective and technically feasible in controlling the discharge of pollutants, we estimated the number of potential closures, number of employees affected, and impact on price. These results are reported in a separate document entitled "The Economic Impact Analysis of Effluent Limitations and Standards for the Nonferrous Metals Manufacturing Industry."

After examining the various treatment technologies, the Agency has identified BPT to represent the average of the best existing technology. Metals removal based on chemical precipitation and sedimentation technology is the basis for the BPT limitations. Steam stripping was selected as the technology basis for ammonia limitations. Oil skimming was selected as the technology basis for oil and grease limitations. To meet the BPT effluent limitations based on this technology, the secondary tungsten and cobalt subcategory is estimated to incur a capital cost of $42,900 and an annual cost of $173,000.

For BAT, the Agency has built upon the BPT technology basis by adding filtration. Filtration is added as an effluent polishing step to the end-of-pipe treatment scheme. To meet the BAT effluent limitations based on this technology, the secondary tungsten and cobalt subcategory is estimated to incur a capital cost to $60,900 and an annual cost of $182,700.

NSPS is equivalent to BAT. In selecting NSPS, EPA recognizes that new plants have the opportunity to implement the best and most efficient manufacturing processes and treatment technology. As such, the technology basis of BAT has been determined as the best demonstrated technology. The technology basis for PSES is equivalent to BAT. To meet the pretreatment standards for existing sources, the secondary tungsten and cobalt subcategory is estimated to incur a capital cost of $16,300 and an annual cost of $8,800. For PSNS, the Agency selected end-of-pipe treatment and in-process flow reduction control techniques equivalent to NSPS.

The best conventional technology (BCT) replaces BAT for the control of conventional pollutants. BCT is not being promulgated because the methodology for BCT has not yet been finalized.

The mass limitations and standards for BPT, BAT, NSPS, PSES and PSNS are presented in Section II.

SECTION II

CONCLUSIONS

EPA has divided the secondary tungsten and cobalt subcategory into 11 subdivisions for the purpose of effluent limitations and standards. These subdivisions are:

(a) Tungsten detergent wash and rinse,
(b) Tungsten leaching acid,
(c) Tungsten post-leaching wash and rinse,
(d) Synthetic scheelite filtrate,
(e) Tungsten carbide leaching wet air pollution control,
(f) Tungsten carbide wash water,
(g) Cobalt sludge leaching wet air pollution control,
(h) Crystallization decant,
(i) Acid wash decant,
(j) Cobalt hydroxide filtrate, and
(k) Cobalt hydroxide filter cake wash.

BPT is promulgated based on the performance achievable by the application of chemical precipitation and sedimentation (lime and settle) technology, along with preliminary treatment consisting of ammonia steam stripping and oil skimming for selected waste streams. The following BPT effluent limitations are promulgated:

(a) Tungsten Detergent Wash and Rinse BPT

Pollutant or Pollutant Property	Maximum for Any One Day	Maximum for Monthly Average
	mg/kg (lb/million lbs) of tungsten scrap washed	
Copper	0.371	0.195
Nickel	0.374	0.248
Ammonia (as N)	25.990	11.430
Cobalt	0.768	0.337
Tungsten	1.357	0.542
Oil and Grease	3.900	2.340
Total Suspended Solids	7.995	3.803
pH	Within the range of 7.5 to 10.0 at all times	

(b) Tungsten Leaching Acid BPT

Pollutant or Pollutant Property	Maximum for Any One Day	Maximum for Monthly Average
mg/kg (lb/million lbs) of tungsten produced		
Copper	4.885	2.571
Nickel	4.937	3.265
Ammonia (as N)	342.700	150.700
Cobalt	10.130	4.448
Tungsten	17.890	7.147
Oil and Grease	51.420	30.850
TSS	105.400	50.140
pH	Within the range of 7.5 to 10.0 at all times	

(c) Tungsten Post-Leaching Wash and Rinse BPT

Pollutant or Pollutant Property	Maximum for Any One Day	Maximum for Monthly Average
mg/kg (lb/million lbs) of tungsten produced		
Copper	9.772	5.143
Nickel	9.875	6.532
Ammonia (as N)	685.600	301.400
Cobalt	20.263	8.897
Tungsten	35.800	14.300
Oil and Grease	102.900	61.720
TSS	210.900	100.300
pH	Within the range of 7.5 to 10.0 at all times	

(d) Synthetic Scheelite Filtrate BPT

Pollutant or Pollutant Property	Maximum for Any One Day	Maximum for Monthly Average
mg/kg (lb/million lbs) of synthetic scheelite produced		
Copper	31.660	16.660
Nickel	31.990	21.160
Ammonia (as N)	2,221.000	976.300
Cobalt	65.644	28.824
Tungsten	116.000	46.320
Oil and Grease	333.200	200.000
TSS	683.100	324.900
pH	Within the range of 7.5 to 10.0 at all times	

(e) Tungsten Carbide Leaching Wet Air Pollution Control BPT

Pollutant or Pollutant Property	Maximum for Any One Day	Maximum for Monthly Average
mg/kg (lb/million lbs) of tungsten carbide scrap leaded		
Copper	3.327	1.751
Nickel	3.362	2.224
Ammonia (as N)	233.400	102.600
Cobalt	6.899	3.029
Tungsten	12.190	4.868
Oil and Grease	35.020	21.010
TSS	71.790	34.150
pH	Within the range of 7.5 to 10.0 at all times	

(f) Tungsten Carbide Wash Water BPT

Pollutant or Pollutant Property	Maximum for Any One Day	Maximum for Monthly Average
mg/kg (lb/million lbs) of tungsten carbide produced		
Copper	15.830	8.333
Nickel	16.000	10.580
Ammonia (as N)	1,111.000	488.300
Cobalt	32.832	14.416
Tungsten	58.000	23.170
Oil and Grease	166.700	100.000
TSS	341.700	162.500
pH	Within the range of 7.5 to 10.0 at all times	

(g) Cobalt Sludge Leaching Wet Air Pollution Control BPT

Pollutant or Pollutant Property	Maximum for Any One Day	Maximum for Monthly Average
mg/kg (lb/million lbs) of cobalt produced from cobalt sludge		
Copper	67.990	35.780
Nickel	68.700	45.440
Ammonia (as N)	4,770.000	2,097.000
Cobalt	140.977	61.901
Tungsten	249.000	99.470
Oil and Grease	715.600	429.400
TSS	1,467.000	697.700
pH	Within the range of 7.5 to 10.0 at all times	

(h) Crystallization Decant BPT

Pollutant or Pollutant Property	Maximum for Any One Day	Maximum for Monthly Average
	mg/kg (lb/million lbs) of cobalt produced	
Copper	79.140	41.650
Nickel	79.970	52.900
Ammonia (as N)	5,552.000	2,441.000
Cobalt	164.101	72.055
Tungsten	289.900	115.800
Oil and Grease	833.000	499.800
TSS	1,708.000	812.200
pH	Within the range of 7.5 to 10.0 at all times	

(i) Acid Wash Decant BPT

Pollutant or Pollutant Property	Maximum for Any One Day	Maximum for Monthly Average
	mg/kg (lb/million lbs) of cobalt produced	
Copper	36.220	19.060
Nickel	36.600	24.210
Ammonia (as N)	2,541.000	1,117.000
Cobalt	75.104	32.977
Tungsten	132.700	52.990
Oil and Grease	381.300	228.800
TSS	781.600	371.700
pH	Within the range of 7.5 to 10.0 at all times	

(j) Cobalt Hydroxide Filtrate BPT

Pollutant or Pollutant Property	Maximum for Any One Day	Maximum for Monthly Average
	mg/kg (lb/million lbs) of cobalt produced	
Copper	107.600	56.650
Nickel	108.800	71.940
Ammonia (as N)	7,551.000	3,320.000
Cobalt	223.189	97.999
Tungsten	394.300	157.500
Oil and Grease	1,133.000	679.800
TSS	2,323.000	1,105.000
pH	Within the range of 7.5 to 10.0 at all times	

(k) Cobalt Hydroxide Filter Cake Wash BPT

Pollutant or Pollutant Property	Maximum for Any One Day	Maximum for Monthly Average
	mg/kg (lb/million lbs) of cobalt produced	
Copper	207.200	109.100
Nickel	209.400	138.500
Ammonia (as N)	14,530.000	6,389.000
Cobalt	429.598	188.631
Tungsten	758.900	303.100
Oil and Grease	2,181.000	1,309.000
TSS	4,471.000	2,126.000
pH	Within the range of 7.5 to 10.0 at all times	

BAT is promulgated based on the performance achievable by the application of chemical precipitation, sedimentation, and multimedia filtration (lime, settle, and filter) technology along with preliminary treatment consisting of ammonia steam stripping and oil skimming for selected waste streams. The following BAT effluent limitations are promulgated:

(a) Tungsten Detergent Wash and Rinse BAT

Pollutant or Pollutant Property	Maximum for Any One Day	Maximum for Monthly Average
	mg/kg (lb/million lbs) of tungsten scrap washed	
Copper	0.250	0.119
Nickel	0.107	0.072
Ammonia (as N)	25.990	11.430
Cobalt	0.538	0.236
Tungsten	0.679	0.302

(b) Tungsten Leaching Acid BAT

Pollutant or Pollutant Property	Maximum for Any One Day	Maximum for Monthly Average
	mg/kg (lb/million lbs) of tungsten produced	
Copper	3.291	1.569
Nickel	1.414	0.951
Ammonia (as N)	342.700	150.700
Cobalt	7.096	3.111
Tungsten	8.947	3.985

(c) Tungsten Post-Leaching Wash and Rinse BAT

Pollutant or Pollutant Property	Maximum for Any One Day	Maximum for Monthly Average
	mg/kg (lb/million lbs) of tungsten produced	
Copper	6.583	3.137
Nickel	2.829	1.903
Ammonia (as N)	685.600	301.400
Cobalt	14.197	6.223
Tungsten	17.900	7.972

(d) Synthetic Scheelite Filtrate BAT

Pollutant or Pollutant Property	Maximum for Any One Day	Maximum for Monthly Average
	mg/kg (lb/million lbs) of synthetic scheelite produced	
Copper	21.330	10.170
Nickel	9.164	6.165
Ammonia (as N)	2,221.000	976.300
Cobalt	45.984	20.160
Tungsten	57.980	25.820

(e) Tungsten Carbide Leaching Wet Air Pollution Control BAT

Pollutant or Pollutant Property	Maximum for Any One Day	Maximum for Monthly Average
	mg/kg (lb/million lbs) of tungsten carbide scrap leached	
Copper	2.241	1.068
Nickel	0.963	0.648
Ammonia (as N)	233.400	102.600
Cobalt	4.833	2.119
Tungsten	6.093	2.714

(f) Tungsten Carbide Wash Water BAT

Pollutant or Pollutant Property	Maximum for Any One Day	Maximum for Monthly Average
mg/kg (lb/million lbs) of tungsten carbide produced		
Copper	10.670	5.083
Nickel	4.583	3.083
Ammonia (as N)	1,111.000	488.300
Cobalt	22.999	10.083
Tungsten	29.000	12.920

(g) Cobalt Sludge Leaching Wet Air Pollution Control BAT

Pollutant or Pollutant Property	Maximum for Any One Day	Maximum for Monthly Average
mg/kg (lb/million lbs) of cobalt produced from cobalt sludge		
Copper	45.800	21.830
Nickel	19.680	13.240
Ammonia (as N)	4,769.000	2,097.000
Cobalt	98.756	43.295
Tungsten	124.500	55.460

(h) Crystallization Decant BAT

Pollutant or Pollutant Property	Maximum for Any One Day	Maximum for Monthly Average
mg/kg (lb/million lbs) of cobalt produced		
Copper	53.310	25.410
Nickel	22.910	15.410
Ammonia (as N)	5,552.000	2,441.000
Cobalt	114.954	50.397
Tungsten	144.900	64.560

(i) Acid Wash Decant BAT

Pollutant or Pollutant Property	Maximum for Any One Day	Maximum for Monthly Average
	mg/kg (lb/million lbs) of cobalt produced	
Copper	24.400	11.630
Nickel	10.490	7.053
Ammonia (as N)	2,541.000	1,117.000
Cobalt	52.611	23.065
Tungsten	66.340	29.550

(j) Cobalt Hydroxide Filtrate BAT

Pollutant or Pollutant Property	Maximum for Any One Day	Maximum for Monthly Average
	mg/kg (lb/million lbs) of cobalt produced	
Copper	72.510	34.560
Nickel	31.160	20.960
Ammonia (as N)	7,551.000	3,320.000
Cobalt	156.346	68.543
Tungsten	197.100	87.800

(k) Cobalt Hydroxide Filter Cake Wash BAT

Pollutant or Pollutant Property	Maximum for Any One Day	Maximum for Monthly Average
	mg/kg (lb/million lbs) of cobalt produced	
Copper	139.600	66.510
Nickel	59.970	40.340
Ammonia (as N)	14,530.000	6,389.000
Cobalt	300.094	131.932
Tungsten	379.400	169.000

NSPS are Promulgated based on the performance achievable by the application of chemical precipitation, sedimentation, and multimedia filtration (lime, settle, and filter) technology, along with preliminary treatment consisting of ammonia steam stripping and oil skimming for selected waste streams. The following effluent standards are promulgated for new sources:

(a) Tungsten Detergent Wash and Rinse NSPS

Pollutant or Pollutant Property	Maximum for Any One Day	Maximum for Monthly Average
mg/kg (lb/million lbs) of tungsten scrap washed		
Copper	0.250	0.119
Nickel	0.107	0.072
Ammonia (as N)	25.990	11.430
Cobalt	0.538	0.236
Tungsten	0.679	0.302
Oil and Grease	1.950	1.950
TSS	2.925	2.340
pH	Within the range of 7.5 to 10.0 at all times	

(b) Tungsten Leaching Acid NSPS

Pollutant or Pollutant Property	Maximum for Any One Day	Maximum for Monthly Average
mg/kg (lb/million lbs) of tungsten produced		
Copper	3.291	1.569
Nickel	1.414	0.951
Ammonia (as N)	342.700	150.700
Cobalt	7.096	3.111
Tungsten	8.947	3.985
Oil and Grease	25.710	25.710
TSS	38.570	30.850
pH	Within the range of 7.5 to 10.0 at all times	

(c) Tungsten Post-Leaching Wash and Rinse NSPS

Pollutant or Pollutant Property	Maximum for Any One Day	Maximum for Monthly Average
mg/kg (lb/million lbs) of tungsten produced		
Copper	6.583	3.137
Nickel	2.829	1.903
Ammonia (as N)	685.600	301.400
Cobalt	14.194	6.223
Tungsten	17.900	7.972
Oil and Grease	51.430	51.430
TSS	77.150	61.720
pH	Within the range of 7.5 to 10.0 at all times	

(d) Synthetic Scheelite Filtrate NSPS

Pollutant or Pollutant Property	Maximum for Any One Day	Maximum for Monthly Average
mg/kg (lb/million lbs) of synthetic scheelite produced		
Copper	21.330	10.170
Nickel	9.164	6.165
Ammonia (as N)	2,221.000	976.300
Cobalt	45.984	20.160
Tungsten	57.980	25.820
Oil and Grease	166.600	166.600
TSS	249.900	200.000
pH	Within the range of 7.5 to 10.0 at all times	

(e) Tungsten Carbide Leaching Wet Air Pollution Control NSPS

Pollutant or Pollutant Property	Maximum for Any One Day	Maximum for Monthly Average
mg/kg (lb/million lbs) of tungsten carbide scrap leached		
Copper	2.241	1.068
Nickel	0.963	0.648
Ammonia (as N)	233.400	102.600
Cobalt	4.833	2.119
Tungsten	6.093	2.714
Oil and Grease	17.510	17.510
TSS	26.270	21.010
pH	Within the range of 7.5 to 10.0 at all times	

(f) Tungsten Carbide Wash Water NSPS

Pollutant or Pollutant Property	Maximum for Any One Day	Maximum for Monthly Average
mg/kg (lb/million lbs) of tungsten carbide produced		
Copper	10.670	5.083
Nickel	4.583	3.083
Ammonia (as N)	1,111.000	488.300
Cobalt	22.999	10.083
Tungsten	29.000	12.920
Oil and Grease	83.330	83.330
TSS	125.000	100.000
pH	Within the range of 7.5 to 10.0 at all times	

(g) Cobalt Sludge Leaching Wet Air Pollution Control NSPS

Pollutant or Pollutant Property	Maximum for Any One Day	Maximum for Monthly Average
mg/kg (lb/million lbs) of cobalt produced from cobalt sludge		
Copper	45.800	21.830
Nickel	19.680	13.240
Ammonia (as N)	4,769.000	2,097.000
Cobalt	98.756	43.295
Tungsten	124.500	55.460
Oil and Grease	357.800	357.800
TSS	536.700	429.400
pH	Within the range of 7.5 to 10.0 at all times	

(h) Crystallization Decant NSPS

Pollutant or Pollutant Property	Maximum for Any One Day	Maximum for Monthly Average
mg/kg (lb/million lbs) of cobalt produced		
Copper	53.310	25.410
Nickel	22.910	15.410
Ammonia (as N)	5,552.000	2,441.000
Cobalt	114.954	50.397
Tungsten	144.900	64.560
Oil and Grease	416.500	416.500
TSS	624.800	499.800
pH	Within the range of 7.5 to 10.0 at all times	

(i) Acid Wash Decant NSPS

Pollutant or Pollutant Property	Maximum for Any One Day	Maximum for Monthly Average
mg/kg (lb/million lbs) of cobalt produced		
Copper	24.400	11.630
Nickel	10.490	7.053
Ammonia (as N)	2,541.000	1,117.000
Cobalt	52.611	23.065
Tungsten	66.340	29.550
Oil and Grease	190.600	190.600
TSS	286.000	228.700
pH	Within the range of 7.5 to 10.0 at all times	

(j) Cobalt Hydroxide Filtrate NSPS

Pollutant or Pollutant Property	Maximum for Any One Day	Maximum for Monthly Average
	mg/kg (lb/million lbs) of cobalt produced	
Copper	72.510	34.560
Nickel	31.160	20.960
Ammonia (as N)	7,551.000	3,320.000
Cobalt	156.346	68.543
Tungsten	197.100	87.800
Oil and Grease	566.500	566.500
TSS	849.700	679.800
pH	Within the range of 7.5 to 10.0 at all times	

(k) Cobalt Hydroxide Filter Cake Wash NSPS

Pollutant or Pollutant Property	Maximum for Any One Day	Maximum for Monthly Average
	mg/kg (lb/million lbs) of cobalt produced	
Copper	139.600	66.510
Nickel	59.970	40.340
Ammonia (as N)	14,530.000	6,389.000
Cobalt	300.094	131.932
Tungsten	379.400	169.000
Oil and Grease	1,091.000	1,091.000
TSS	1,636.000	1,309.000
pH	Within the range to 7.5 to 10.0 at all times	

PSES are promulgated based on the performance achievable by the application of chemical precipitation, sedimentation, and multimedia filtration (lime, settle, and filter) technology, along with preliminary treatment consisting of ammonia steam stripping and oil skimming for selected waste streams. The following pretreatment standards are promulgated for existing sources:

(a) Tungsten Detergent Wash and Rinse PSES

Pollutant or Pollutant Property	Maximum for Any One Day	Maximum for Monthly Average
mg/kg (lb/million lbs) of tungsten scrap washed		
Copper	0.250	0.119
Nickel	0.107	0.072
Ammonia (as N)	25.990	11.430
Cobalt	0.538	0.236
Tungsten	0.679	0.302

(b) Tungsten Leaching Acid PSES

Pollutant or Pollutant Property	Maximum for Any One Day	Maximum for Monthly Average
mg/kg (lb/million lbs] of tungsten produced		
Copper	3.291	1.569
Nickel	1.414	0.951
Ammonia (as N)	342.700	150.700
Cobalt	7.096	3.111
Tungsten	8.947	3.985

(c) Tungsten Post-Leaching Wash and Rinse PSES

Pollutant or Pollutant Property	Maximum for Any One Day	Maximum for Monthly Average
mg/kg (lb/million lbs) of tungsten produced		
Copper	6.583	3.137
Nickel	2.829	1.903
Ammonia (as N)	685.600	301.400
Cobalt	14.194	6.223
Tungsten	17.900	7.972

(d) Synthetic Scheelite Filtrate PSES

Pollutant or Pollutant Property	Maximum for Any One Day	Maximum for Monthly Average
mg/kg (lb/million lbs) of tungsten produced		
Copper	21.330	10.170
Nickel	9.164	6.165
Ammonia (as N)	2,221.000	976.300
Cobalt	45.984	20.160
Tungsten	57.980	25.820

(e) Tungsten Carbide Leaching Wet Air Pollution Control PSES

Pollutant or Pollutant Property	Maximum for Any One Day	Maximum for Monthly Average
mg/kg (lb/million lbs) of tungsten carbide scrap leached		
Copper	2.241	1.068
Nickel	0.963	0.648
Ammonia (as N)	233.400	102.600
Cobalt	4.833	2.119
Tungsten	6.093	2.714

(f) Tungsten Carbide Wash Water PSES

Pollutant or Pollutant Property	Maximum for Any One Day	Maximum for Monthly Average
mg/kg (lb/million lbs) of tungsten carbide produced		
Copper	10.670	5.083
Nickel	4.583	3.083
Ammonia (as N)	1,111.000	488.300
Cobalt	22.999	10.083
Tungsten	29.000	12.920

(g) Cobalt Sludge Leaching Wet Air Pollution Control PSES

Pollutant or Pollutant Property	Maximum for Any One Day	Maximum for Monthly Average
mg/kg (lb/million lbs) of cobalt produced from cobalt sludge		
Copper	45.800	21.830
Nickel	19.680	13.240
Ammonia (as N)	4,770.000	2,097.000
Cobalt	98.756	43.295
Tungsten	124.500	55.460

(h) Crystallization Decant PSES

Pollutant or Pollutant Property	Maximum for Any One Day	Maximum for Monthly Average
mg/kg (lb/million lbs) of cobalt produced		
Copper	53.310	25.410
Nickel	22.910	15.410
Ammonia (as N)	5,552.000	2,441.000
Cobalt	114.954	50.397
Tungsten	144.900	64.560

(i) Acid Wash Decant PSES

Pollutant or Pollutant Property	Maximum for Any One Day	Maximum for Monthly Average
mg/kg (lb/million lbs) of cobalt produced		
Copper	24.400	11.630
Nickel	10.490	7.053
Ammonia (as N)	2,541.000	1,117.000
Cobalt	52.611	23.065
Tungsten	66.340	29.550

(j) Cobalt Hydroxide Filtrate PSES

Pollutant or Pollutant Property	Maximum for Any One Day	Maximum for Monthly Average
	mg/kg (lb/million lbs) of cobalt produced	
Copper	72.510	34.560
Nickel	31.160	20.960
Ammonia (as N)	7,551.000	3,320.000
Cobalt	156.346	68.543
Tungsten	197.100	87.800

(k) Cobalt Hydroxide Filter Cake Wash PSES

Pollutant or Pollutant Property	Maximum for Any One Day	Maximum for Monthly Average
	mg/kg (lb/million lbs) of cobalt produced	
Copper	139.600	66.510
Nickel	59.970	40.340
Ammonia (as N)	14,530.000	6,389.000
Cobalt	300.094	131.932
Tungsten	379.400	169.000

PSNS are promulgated based on the performance achievable by the application of chemical precipitation, sedimentation, and multimedia filtration (lime, settle, and filter) technology, along with preliminary treatment consisting of ammonia steam stripping and oil skimming for selected wastewater streams. The following pretreatment standards are promulgated for new sources:

(a) Tungsten Detergent Wash and Rinse PSNS

Pollutant or Pollutant Property	Maximum for Any One Day	Maximum for Monthly Average
	mg/kg (lb/million lbs) of tungsten scrap washed	
Copper	0.250	0.119
Nickel	0.107	0.072
Ammonia (as N)	25.990	11.430
Cobalt	0.538	0.236
Tungsten	0.679	0.302

(b) Tungsten Leaching Acid PSNS

Pollutant or Pollutant Property	Maximum for Any One Day	Maximum for Monthly Average
mg/kg (lb/million lbs) of tungsten produced		
Copper	3.291	1.569
Nickel	1.414	0.951
Ammonia (as N)	342.700	150.700
Cobalt	7.096	3.111
Tungsten	8.947	3.985

(c) Tungsten Post-Leaching Wash and Rinse PSNS

Pollutant or Pollutant Property	Maximum for Any One Day	Maximum for Monthly Average
mg/kg (lb/million lbs) of tungsten produced		
Copper	6.583	3.137
Nickel	2.829	1.903
Ammonia (as N)	685.600	301.400
Cobalt	14.194	6.223
Tungsten	17.900	7.972

(d) Synthetic Scheelite Filtrate PSNS

Pollutant or Pollutant Property	Maximum for Any One Day	Maximum for Monthly Average
mg/kg (lb/million lbs) of synthetic scheelite produced		
Copper	21.330	10.170
Nickel	9.164	6.165
Ammonia (as N)	2,221.000	976.300
Cobalt	45.984	20.160
Tungsten	57.980	25.820

(e) Tungsten Carbide Leaching Wet Air Pollution Control PSNS

Pollutant or Pollutant Property	Maximum for Any One Day	Maximum for Monthly Average
mg/kg (lb/million lbs) of tungsten carbide scrap leached		
Copper	2.241	1.068
Nickel	0.963	0.648
Ammonia (as N)	233.400	102.600
Cobalt	4.833	2.119
Tungsten	6.093	2.714

(f) Tungsten Carbide Wash Water PSNS

Pollutant or Pollutant Property	Maximum for Any One Day	Maximum for Monthly Average
mg/kg (lb/million lbs) of tungsten carbide produced		
Copper	10.670	5.083
Nickel	4.583	3.083
Ammonia (as N)	1,111.000	488.300
Cobalt	22.999	10.083
Tungsten	29.000	12.920

(g) Cobalt Sludge Leaching Wet Air Pollution Control PSNS

Pollutant or Pollutant Property	Maximum for Any One Day	Maximum for Monthly Average
mg/kg (lb/million lbs) of cobalt produced from cobalt sludge		
Copper	45.800	21.830
Nickel	19.680	13.240
Ammonia (as N)	4,770.000	2,097.000
Cobalt	98.756	43.295
Tungsten	124.500	55.460

(h) Crystallization Decant PSNS

Pollutant or Pollutant Property	Maximum for Any One Day	Maximum for Monthly Average
	mg/kg (lb/million lbs) of cobalt produced	
Copper	53.310	25.410
Nickel	22.910	15.410
Ammonia (as N)	5,552.000	2,441.000
Cobalt	114.954	50.397
Tungsten	144.900	64.560

(i) Acid Wash Decant PSNS

Pollutant or Pollutant Property	Maximum for Any One Day	Maximum for Monthly Average
	mg/kg (lb/million lbs) of cobalt produced	
Copper	24.400	11.630
Nickel	10.490	7.053
Ammonia (as N)	2,541.000	1,117.000
Cobalt	52.611	23.065
Tungsten	66.340	29.550

(j) Cobalt Hydroxide Filtrate PSNS

Pollutant or Pollutant Property	Maximum for Any One Day	Maximum for Monthly Average
	mg/kg (lb/million lbs) of cobalt produced	
Copper	72.510	34.560
Nickel	31.160	20.960
Ammonia (as N)	7,551.000	3,320.000
Cobalt	156.346	68.543
Tungsten	197.100	87.800

(k) Cobalt Hydroxide Filter Cake Wash PSNS

Pollutant or Pollutant Property	Maximum for Any One Day	Maximum for Monthly Average
	mg/kg (lb/million lbs) of cobalt produced	
Copper	139.600	66.510
Nickel	59.970	40.340
Ammonia (as N)	14,530.000	6,389.000
Cobalt	300.094	131.932
Tungsten	379.400	169.000

EPA is not promulgating BCT for this subcategory at this time.

SECTION III

SUBCATEGORY PROFILE

This section of the secondary tungsten and cobalt supplement describes the raw materials and processes used in smelting and refining secondary tungsten and cobalt and presents a profile of the secondary tungsten and cobalt plants identified in this study.

DESCRIPTION OF SECONDARY TUNGSTEN AND COBALT PRODUCTION

Secondary tungsten is produced from tungsten carbide scrap and other tungsten bearing scrap. Secondary cobalt is recovered as a co-product of the tungsten carbide recovery process. Cobalt is used as a binder alloy in the manufacture of tungsten carbide parts. The hydrometallurgical processing used to recover secondary tungsten, secondary tungsten carbide, and secondary cobalt can be divided into several steps: tungsten recovery from scrap (non-tungsten carbide), synthetic scheelite production, tungsten carbide recovery from scrap, cobalt recovery from sludges and solutions, and cobalt produced from cobalt oxylate. Not all of these processes are present at each plant. The secondary tungsten and cobalt subcategory production processes are presented schematically in Figure III-1 (page 3201) and described below.

RAW MATERIALS

The raw materials used for secondary tungsten and cobalt are tungsten carbide scrap, other tungsten bearing scrap, cobalt sludge, and cobalt oxylate. Tungsten scrap consists mostly of oily machine turnings, and brazed-tungsten alloy scrap. The major impurities in this type of scrap are copper, nickel, silver, and zinc. Tungsten carbide scrap is comprised of recycled drilling bits and other mining tools, machinery parts, die casts, and other hard surfacing materials. The major impurities in this type of scrap are cobalt and other metals. Tungsten scrap may contain more than 90 percent tungsten, and tungsten carbide scrap generally contains 10 to 40 percent cobalt, with more than 90 percent of the remainder being tungsten carbide.

TUNGSTEN RECOVERY FROM SCRAP

Tungsten may be recovered from scrap by leaching, as shown in Figure III-1. The tungsten bearing scrap is washed with detergent and rinsed with water prior to the leaching to remove surface oils from the scrap.

Scrap is washed in either a mixing vessel or in a screw-conveyer apparatus. Detergent solution is added to break up oil and grease particles, and then rinse water is added and continuously

removed until the scrap is cleaned. Clean scrap is easier to leach and requires less leaching time. The detergent wash and rinse water are discharged as a wastewater stream.

Acid leaching is the major purification step in secondary tungsten production. Tungsten bearing raw materials are leached in an agitated vessel with hydrochloric acid and other chemicals. Tungsten is leached in order to remove copper, nickel, silver, zinc and other impurities. Leaching is generally operated batchwise, and may be repeated several times in order to increase product purity. Following the leaching operation is a liquid-solid separation step, which is either done by filtration or decantation. When tungsten scrap is acid leached, the spent leaching solution is discharged.

After leaching impurities away from tungsten, the purified metal is washed with acid and base, and rinsed with water. Washing neutralizes and removes any traces of impurities and leaching acid from the tungsten product. The washing solutions are discharged as a wastewater stream.

SYNTHETIC SCHEELITE PRODUCTION

Both tungsten and tungsten carbide scrap may be used to produce synthetic scheelite as shown in Figure III-1 (page 3201). Synthetic scheelite ($CaWO_4$) is used in primary tungsten production as a supplemental feedstock along with natural scheelite ore.

Tungsten scrap may be purified with an acid leaching process prior to entering the smelting or roasting furnace where it is oxidized. No wastewater is associated with this process. Tungsten oxide is digested with caustic, in order to dissolve the tungsten oxide. Undissolved impurities are filtered away, and the solution is reacted with calcium chloride or other chemicals to produce synthetic scheelite. The liquid waste is filtered away from the synthetic scheelite and is discharged. If tungsten carbide issued as a raw material, the final filtrate contains cobalt values which are recovered prior to discharge by a hydroxide precipitation and filtration process.

TUNGSTEN CARBIDE RECOVERY FROM SCRAP

As shown in Figure III-1, tungsten carbide is recovered from scrap by acid leaching. After preliminary cleaning with detergent and water, tungsten carbide scrap is leached with acid and other chemicals to remove impurities. Cobalt is the major impurity removed. Tungsten carbide powder is washed with water and then crushed and ground to specification. One plant reported discharging the post-leaching wash water as a wastewater stream. Other plants leaching tungsten carbide scrap reported reuseing their spent solutions in a cobalt recovery process.

One plant leaching tungsten carbide scrap reported a wet scrubber to control acid fumes from the leaching vessel. There is a

wastewater discharge from this scrubber.

COBALT RECOVERY FROM SLUDGES AND SOLUTIONS

The cobalt-laden solutions and filtrates produced in the tungsten carbide recovery process, along with cobalt-laden solutions produced by leaching cobalt sludge, may be routed to a cobalt recovery circuit. Cobalt hydroxide, which may be reduced to cobalt powder is most commonly produced, although other chemical compounds of cobalt may be produced. These processes are shown in Figures III-1.

One plant leaching cobalt sludge reported a wet scrubber to control acid fumes from the leaching vessel. There is a wastewater discharge from this scrubber.

Cobalt Production Via Cobalt Hydroxide

The first step in the production of cobalt is to crystallize the cobalt in solution as a complex cobalt salt. Most commonly, this is an ammonium complex, but other systems may be used. The crystals settle out, and the resultant supernatant liquor is decanted and discharged as a process wastewater. The cobalt crystals are washed with hydrochloric acid and water to remove impurities. The acid wash water is also decanted and discharged as a wastewater stream.

The purified crystals are then dissolved in sodium fluoride solution, and the cobalt precipitated as cobalt hydroxide ($Co(OH)_2$). The slurry is filtered, and the filtrate discharged as a wastewater stream. The $Co(OH)_2$ filter cake is then washed with water. The wash water is also discharged as a wastewater stream. Cobalt hydroxide is dried and reduced in a furnace under a hydrogen atmosphere to pure cobalt powder. Reduction to the metal is a dry operation.

Cobalt Dichloride Production

Cemented tungsten carbide scrap can also be processed to yield a tungsten carbide product and cobalt dichloride ($CoCl_2$). This process does not generate a process wastewater discharge based on complete recycle of the wastewater.

COBALT PRODUCTION FROM COBALT OXYLATE

Cobalt powder is produced from cobalt oxylate by reducing it in a hydrogen furnace, as shown in Figure III-1. There is no process wastewater associated with this reduction process.

PROCESS WASTEWATER SOURCES

Although a variety of processes are involved in secondary tungsten and cobalt production, the significant wastewater sources that are associated with the subcategory can be designated as follows:

1. Tungsten detergent wash and rinse,
2. Tungsten leaching acid,
3. Tungsten post-leaching wash and rinse,
4. Synthetic scheelite filtrate,
5. Tungsten carbide leaching wet air pollution control,
6. Tungsten carbide wash water,
7. Cobalt sludge leaching wet air pollution control,
8. Crystallization decant,
9. Acid wash decant,
10. Cobalt hydroxide filtrate, and
11. Cobalt hydroxide filter cake wash.

OTHER WASTEWATER SOURCES

Other waste streams associated with the secondary tungsten and cobalt subcategory include stormwater runoff, maintenance and cleanup water, and noncontact cooling water. These streams are not considered as a part of this rulemaking. EPA believes that the flows and pollutant loadings associated with these streams are insignificant relative to the waste streams selected and are best handled by the appropriate permit authority on a case-by-case basis under authority of Section 403 of the Clean Water Act.

AGE, PRODUCTION, AND PROCESS PROFILE

Figure III-2 (page 3204) shows the locations of the six secondary tungsten and cobalt plants operating in the United States. All are located east of the Mississippi River, concentrated near industrial centers.

Table III-1 (page 3198) illustrates the relative age and discharge status of the secondary tungsten and cobalt plants operating in the United States. One plant was built prior to World War I, two plants were built during World War II, and only two have been built in the last 17 years.

From Table III-2 (page 3199) it can be seen that of the six facilities which produce secondary tungsten and cobalt, mean tungsten product production is about 100 tons/year and mean cobalt product production is also about 100 tons/year.

Table III-3 (page 3200) provides a summary of the number of plants generating wastewater for the waste streams associated with the various processes and the number of plants with the process.

Table III-1

INITIAL OPERATING YEAR (RANGE) SUMMARY OF PLANTS
IN THE SECONDARY TUNGSTEN AND COBALT SUBCATEGORY BY DISCHARGE TYPE

	Initial Operating Year (Range) (Plant Age in Years)					
Type of Plant	Present-1966 (0-17	1965-1946 (15-35)	1945-1926 (35-55)	1925-1906 (55-75)	1905-1885 (75-100)	Total
Direct	1	0	2	0	1	4
Indirect	0	0	0	0	0	1
Zero	0	0	0	0	0	0
Dry	1	0	0	0	0	1
Total	2	0	2	0	1	6

TABLE III-2

PRODUCTION RANGES FOR THE SECONDARY TUNGSTEN AND COBALT SUBCATEGORY

Tungsten Products Production Ranges for 1982 (Tons/Year)(a)	Number of Plants
0-10	2
10-100	3
100-500	1
Total	6

Cobalt Products Production Ranges for 1982 (Tons/Year)(b)	Number of Plants
0-10	2
10-100	0
100-500	1
Total	3

(a) Based on production reported in dcp.

(b) Cobalt production was unavailable from one plant.

TABLE III-3

SUMMARY OF SECONDARY TUNGSTEN AND COBALT SUBCATEGORY PROCESSES AND ASSOCIATED WASTE STREAMS

Process or Waste Stream	Number of Tungsten and Cobalt Plants with Process or Waste Stream	Number of Plants Reporting Generation of Wastewater*
Tungsten or tungsten carbide recovery	4	
Tungsten detergent wash and rinse	1	1
Tungsten leaching acid	2	1
Tungsten post-leaching wash and rinse	1	1
Synthetic scheelite filtrate	3	3
Tungsten carbide leaching air pollution control	1	1
Tungsten carbide wash water	2	1
Cobalt recovery	4	
Cobalt sludge leaching air pollution control	1	1
Crystallization decant	1	1
Acid wash decant	1	1
Cobalt hydroxide filtrate	1	1
Cobalt hydroxide filter cake wash	1	1

*Through reuse or evaporation practices, a plant may "generate" a wastewater from a particular process but not discharge it.

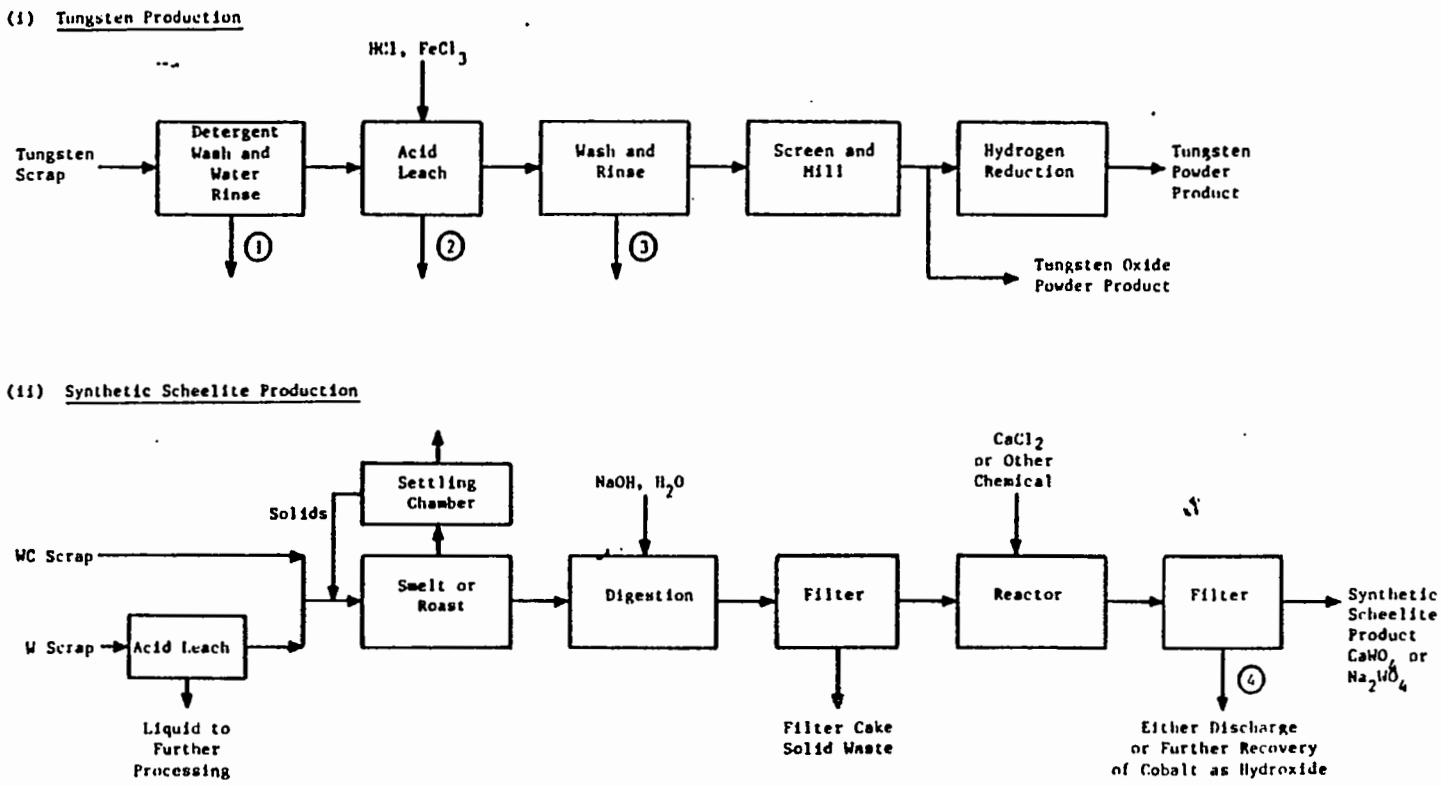

Figure III-1

SECONDARY TUNGSTEN AND COBALT PRODUCTION PROCESSES

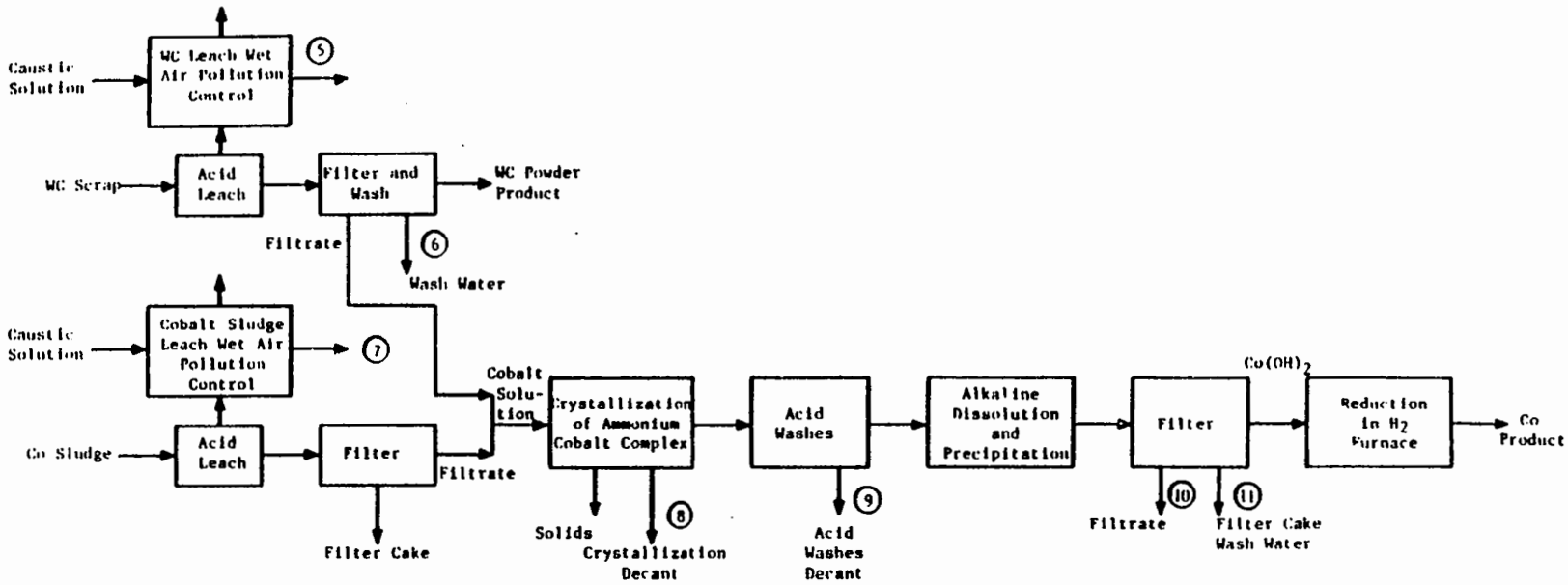

(iv) Tungsten Carbide and Cobalt Dichloride Production

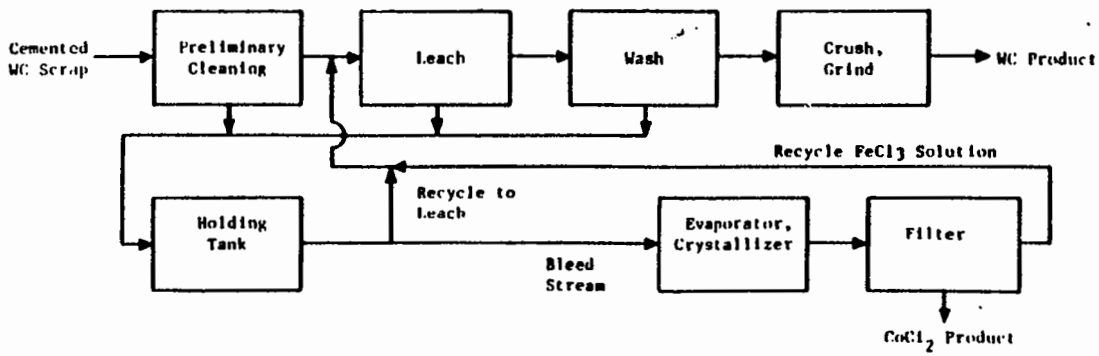

Figure III-1 (Continued)

SECONDARY TUNGSTEN AND COBALT PRODUCTION PROCESS

(v) Cobalt Powder Produced From Cobalt Oxylate

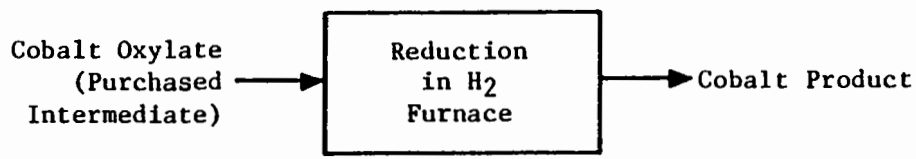

Figure III-1 (Continued)
SECONDARY TUNGSTEN AND COBALT PRODUCTION PROCESSES

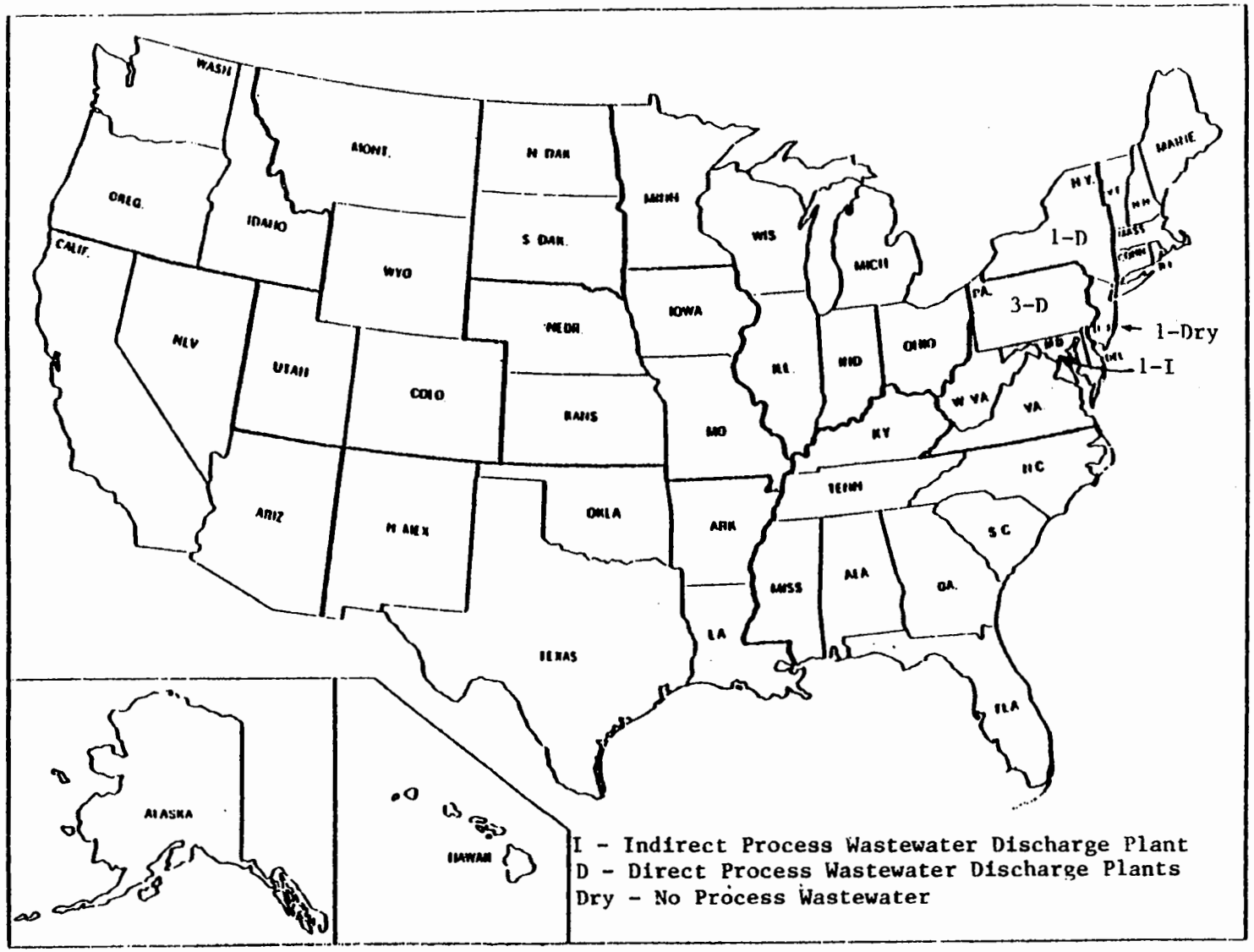

Figure III-2

GEOGRAPHIC LOCATIONS OF SECONDARY TUNGSTEN AND COBALT SUBCATEGORY PLANTS

THIS PAGE INTENTIONALLY LEFT BLANK

SECTION IV

SUBCATEGORIZATION

This section summarizes the factors considered during the designation of the subdivisions or building blocks of the secondary tungsten and cobalt subcategory and its related subdivisions. Production normalizing parameters for each subdivision are discussed.

FACTORS CONSIDERED IN SUBDIVIDING THE SECONDARY TUNGSTEN AND COBALT SUBCATEGORY

The factors listed previously for general subcategorization were each evaluated when considering subdivision of the secondary tungsten and cobalt subcategory. In the discussion that follows, the factors will be described as they pertain to this particular subcategory.

The rationale for considering subdivision of the secondary tungsten and cobalt subcategory is based primarily on differences in the production processes and raw materials used. Within this subcategory, a number of different operations are performed, which may or may not have a water use or discharge, and which may require the establishment of separate effluent limitations. Secondary tungsten and cobalt is considered a single subcategory, however, a thorough examination of the production processes has illustrated the need for limitations and standards based on wastewater streams. Limitations will be based on specific flows for the following subdivisions:

1. Tungsten detergent wash and rinse,
2. Tungsten leaching acid,
3. Tungsten post-leaching wash and rinse,
4. Synthetic scheelite filtrate,
5. Tungsten carbide leaching wet air pollution control,
6. Tungsten carbide wash water,
7. Cobalt sludge leaching wet air pollution control.
8. Crystallization decant,
9. Acid wash decant,
10. Cobalt hydroxide filtrate, and
11. Cobalt hydroxide filter cake wash.

These subdivisions follow directly from differences between the processing steps of secondary tungsten and cobalt production. Tungsten recovery from scrap, synthetic scheelite production, tungsten carbide recovery from scrap, and cobalt recovery from sludges and solutions each have various steps which may generate wastewaters.

Refining tungsten scrap into pure tungsten metal powder establishes a need for the first three subdivisions -- tungsten detergent wash and rinse, tungsten leaching acid, and tungsten post-leaching wash and rinse. Tungsten scrap may be washed,

leached, and washed again to produce a pure tungsten product. Separate subdivisions are necessary because some plants do not use all these processes.

The fourth subdivision, synthetic scheelite filtrate, is needed for plants which produce synthetic scheelite from scrap and discharge the wastewater generated by the process.

The fifth and sixth subdivisions are necessary for plants which recover tungsten carbide from scrap, and discharge post-leaching wash water, or leaching scrubber liquor.

The seventh through eleventh subdivisions are needed for plants which refine cobalt found in tungsten carbide scrap or other secondary materials into pure cobalt powder. This is a wet chemistry purification and there are several wastewater sources.

OTHER FACTORS

The other factors considered in this evaluation were shown to be inappropriate bases for subdivision. Air pollution control methods, treatment costs, and total energy requirements are functions of the selected subcategorization factors -- metal product, raw materials, and production processes. As discussed in Section IV of the General Development Document, certain other factors, such as plant age, plant size, and the number of employees, were also evaluated and determined to be inappropriate for use as bases for subdivision of this nonferrous metals subcategory.

PRODUCTION NORMALIZING PARAMETERS

As discussed previously, the effluent limitations and standards developed in this document establish mass limitations for the discharge of specific pollutants or pollutant parameters. To allow these regulations to be applied to plants with various production capacities, the mass of pollutant discharged must be related to a unit of production. This factor is known as the production normalizing parameter (PNP). The PNPs for the 11 subdivisions or building blocks are as follows:

Building Block	PNP
1. Tungsten detergent wash and rinse	tungsten scrap washed
2. Tungsten leaching acid	tungsten produced
3. Tungsten post-leaching wash and rinse	tungsten produced
4. Synthetic scheelite filtrate	synthetic scheelite produced
5. Tungsten carbide leaching wet air pollution control	tungsten carbide scrap leached

6. Tungsten carbide wash water	tungsten carbide produced
7. Cobalt sludge leaching wet air pollution control	cobalt produced from cobalt sludge
8. Crystallization decant	cobalt produced
9. Acid wash decant	cobalt produced
10. Cobalt hydroxide filtrate	cobalt produced
11. Cobalt hydroxide filter cake wash	cobalt produced

Other production normalizing parameters were considered. The use of production capacity instead of actual production was eliminated because wastewater flow is more closely related to production than to rated capacity.

The amount of scrap washed was selected as the normalizing parameter for the pre-leaching detergent wash and rinse waste stream instead of the amount of tungsten produced because not all the tungsten scrap is washed prior to leaching. Non-oily scrap is leached without preliminary washing, and, if it were included in the production used to calculate a flow allowance, it would upset the flow-to-production relation inherent in this regulation.

THIS PAGE INTENTIONALLY LEFT BLANK

SECTION V

WATER USE AND WASTEWATER CHARACTERISTICS

This section describes the characteristics of the wastewaters associated with the secondary tungsten and cobalt subcategory. Water use and discharge rates are explained and then summarized in tables at the end of this section. Data used to characterize the wastewaters are presented. Two principal data sources were used: data collection portfolios (dcp) and field sampling results. Data collection portfolios contain information regarding wastewater flows and production levels. Finally, the specific source, water use and discharge flows, and wastewater characteristics for each separate wastewater source are discussed.

In order to quantify the pollutant discharge from secondary tungsten and cobalt plants, a field sampling program was conducted. A complete list of the pollutants considered and a summary of the techniques used in sampling and laboratory analyses are included in Section V of Vol. I. Samples were analyzed for 124 of the 126 priority pollutants and other pollutants deemed appropriate. (Because the analytical standard for TCDD was judged to be too hazardous to be made generally available, samples were never analyzed for this pollutant. Samples were also never analyzed for asbestos. There is no reason to expect that TCDD or asbestos would be present in nonferrous metals manufacturing wastewater.) Specific plants were selected for sampling in the secondary tungsten and cobalt subcategory. In general, the samples were analyzed for two classes of pollutants: toxic metal pollutants, and criteria pollutants (which includes both conventional and nonconventional pollutants).

One additional plant was identified following proposal based on information supplied in an industry comment. This facility manufactures synthetic scheelite and is an indirect discharger of synthetic scheelite filtrate.

Since proposal, EPA gathered additional wastewater sampling data for two of the subdivisions in this subcategory. These data were acquired through a self-sampling program which was conducted at the specific request of EPA. The data include analyses for the toxic metals arsenic, beryllium, cadmium, chromium, copper, lead, nickel, silver, and zinc. The data also include analyses for the nonconventional pollutants ammonia, cobalt, and tungsten. These data support the assumptions which EPA had made concerning the presence and concentration to pollutants in those subdivisions where we did not have analytical data for specific pollutants. For this reason, the selection of pollutant parameters for limitation in this subcategory (Section VI) has not been revised based on these new data.

As described in Section IV of this supplement, the secondary tungsten and cobalt subcategory has been divided into 11 subdivisions or building blocks, so that the promulgated regulation contains mass discharge limitations and standards for 11 unit processes discharging process wastewater. Differences in the wastewater characteristics associated with these subdivisions are to be expected. For this reason, wastewater streams corresponding to each subdivision are addressed separately in the discussions that follow. These wastewater sources are:

1. Tungsten detergent wash and rinse,
2. Tungsten leaching acid,
3. Tungsten post-leaching wash and rinse,
4. Synthetic scheelite filtrate,
5. Tungsten carbide leaching wet air pollution control,
6. Tungsten carbide wash water,
7. Cobalt sludge leaching wet air pollution control,
8. Crystallization decant,
9. Acid wash decant,
10. Cobalt hydroxide filtrate, and
11. Cobalt hydroxide filter cake wash.

WASTEWATER FLOW RATES

Data supplied by dcp responses were evaluated, and two flow-to-production ratios were calculated for each stream. The two ratios, water use and wastewater discharge flow, are differentiated by the flow value used in calculation. Water use is defined as the volume of water required for a given process per mass of tungsten and cobalt product and is therefore based on the sum of recycle and make-up flows to a given process. Wastewater flow discharged after pretreatment or recycle (if these are present) is used in calculating the production normalized flow -- the volume of wastewater discharged from a given process to further treatment, disposal, or discharge per mass of tungsten or cobalt produced. Differences between the water use and wastewater flows associated with a given stream result from recycle, evaporation, and carry-over on the product. The production values used in calculation correspond to the production normalizing parameter, PNP, assigned to each stream, as outlined in Section IV. As an example, tungsten leaching acid wastewater flow is related to tungsten production. As such, the discharge rate is expressed in liters of leaching acid wastewater discharged per metric ton of tungsten produced.

The production normalized flows were compiled and statistically analyzed by stream type. These production normalized water use and discharge flows are presented by subdivision in Tables V-1 through V-11 (pages 3217 - 3220). Where appropriate, an attempt was made to identify factors that could account for variations in water use. This information is summarized in this section. A similar analysis of factors affecting the wastewater values is presented in Sections IX, X, XI, and XII where representative BPT, BAT, NSPS, and pretreatment discharge flows are selected for use in calculating the effluent limitations and standards.

WASTEWATER CHARACTERISTICS DATA

Data used to characterize the various wastewaters associated with secondary tungsten and cobalt production come from two sources -- data collection portfolios and analytical data from field sampling.

DATA COLLECTION PORTFOLIOS

In the data collection portfolios, the secondary tungsten and cobalt plants were asked to indicate whether or not the priority pollutants were present in their effluent. All of the discharging plants indicated that priority organic pollutants were believed to be absent from their effluent. Three plants stated that some of the priority metals were known or believed to be present in their effluent. The responses for the priority metals and cyanide are summarized below:

Pollutant	Known Present	Believed Present
Antimony	0	1
Arsenic	1	0
Beryllium	0	0
Cadmium	0	1
Chromium	2	2
Cyanide	2	2
Copper	0	0
Lead	1	0
Mercury	1	1
Nickel	1	2
Selenium	0	0
Silver	0	1
Thallium	0	0
Zinc	1	2

FIELD SAMPLING DATA

In order to quantify the concentrations of pollutants present in wastewater from secondary tungsten and cobalt plants, wastewater samples were collected at discharging plants.

The sampling data for the secondary tungsten and cobalt subcategory are presented in Tables V-12 through V-19 (pages 3221 - 3245). Table V-20 (page 3247) presents sampling data for influent and effluent from treatment for secondary tungsten and cobalt. Table V-21 (page 3252) presents partially treated wastewater data. The stream codes displayed in Tables V-12 through V-21 (pages 3221 - 3252) may be used to identify the location of each of the samples on process flow diagrams in Figures V-1 and V-2. Where no data are listed for a specific day of sampling, the wastewater samples for the stream were not

collected. If the analysis did not detect a pollutant in a waste stream, the pollutant was reported as not detected (or ND), and a value of zero was used in averaging.

Toxic organic pollutants were not measured in this subcategory. Wastewater samples collected at plants in this subcategory were analyzed for all priority metal pollutants, cyanide, and several conventional and nonconventional pollutants.

The detection limits shown on the data tables for toxic pollutants and conventional and nonconventional pollutants are not the same in all cases as the published detection limits for these pollutants by the same analytical methods. The detection limits used were reported with the analytical data and hence are the appropriate limits to apply to the data. Detection limit variation can occur as a result of a number of laboratory-specific, equipment-specific, and daily operator-specific factors. These factors can include day-to-day differences in machine calibration, variation in stock solutions, and variation in operators.

The statistical analysis of data includes some samples measured at concentrations considered not quantifiable. For data considered as detected but below quantifiable concentrations, a value of zero is used for averaging. Nonconventional and conventional pollutant data reported with a "less than" sign are considered as detected, but not further quantifiable. A value of zero is also used for averaging. If a pollutant is reported as not detected, it is assigned a value of zero in calculating the average. Finally, priority metal values reported as less than a certain value were considered as not quantifiable, and consequently were assigned a value of zero in the calculation of the average. The average values were not used in the selection of pollutants or pollutant parameters for regulation.

Appropriate source water concentrations are presented with the summaries of the sampling data. The method by which each sample was collected is indicated by number, as follows:

1 - One-time grab
2 - Manual composite during intermittent process operation
3 - 8-hour manual composite
4 - 8-hour automatic composite
5 - 24-hour manual composite
6 - 24-hour automatic composite

WASTEWATER CHARACTERISTICS AND FLOWS BY SUBDIVISION

Since secondary tungsten and cobalt production involves 11 principal sources of wastewater and each has potentially different characteristics and flows, the wastewater characteristics and discharge rages corresponding to each

subdivision will be described separately. A brief description of why the associated production processes generate a wastewater and explanations for variations of water use within each subdivision will also be discussed.

TUNGSTEN DETERGENT WASH AND RINSE

Tungsten scrap is washed with detergent and rinsed with water in order to clean surface oils from the scrap. The water use and discharge rates for tungsten detergent wash and rinse are reported in Table V-1 (page 3217). Tungsten detergent wash and rinse sampling data are presented in Table V-12 (page 3221). Samples were taken of both the wash and the rinse, and the data are shown in Table V-12. This wastewater stream is characterized by the presence of treatable concentrations of cadmium, chromium, cobalt, copper, nickel, oil and grease, and suspended solids.

TUNGSTEN LEACHING ACID

Tungsten scrap is leached with acid in order to remove impurities from the tungsten metal. After leaching. the spent acid is discharged. The water use and discharge rates are presented in Table V-2 (page 3217). Tungsten leaching acid sampling data are presented in Table V-13 (page 3226). This wastewater stream is characterized by the presence of treatable concentrations of arsenic, cadmium, chromium, cobalt, copper, nickel, silver, zinc, suspended solids, and an acidic pH.

TUNGSTEN POST-LEACHING WASH AND RINSE

After leaching tungsten scrap with acid, the tungsten product may be washed with acid and rinsed with water in order to further purify the product. The water use and discharge rates for this wastewater stream are presented in Table V-3 (page 3217).Sampling data for tungsten post-leaching wash and rinse water is presented in Table V-14 (page 3230). Treatable concentrations of arsenic, cadmium, chromium, cobalt, copper, nickel, silver, zinc, suspended solids, and an acidic pH characterize this waste stream.

SYNTHETIC SCHEELITE FILTRATE

Both tungsten and tungsten carbide scrap can be processed into synthetic scheelite, which can then be used as a raw material in a primary tungsten refinery. After producing synthetic scheelite, wastewater is filtered away from the product and may be discharged. Table V-4 (page 3218) shows the water use and discharge rates for plants producing synthetic scheelite.

Although this waste stream was not sampled, it is believed to have similar characteristics to the cobalt hydroxide filtrate sampling data is shown in Table V-18 (page 3243). These streams are expected to be similar because both processes are precipitating products from a caustic solution which generally

come from the same raw material. This stream is characterized by treatable concentrations of antimony, arsenic, cadmium, cyanide, nickel, silver, zinc, and suspended solids. Ammonia is not expected to be present in synthetic scheelite filtrate.

TUNGSTEN CARBIDE LEACHING WET AIR POLLUTION CONTROL

Scrap tungsten carbide may be leached with hydrochloric acid to solubilize cobalt, which is used as the binder alloy in the tungsten carbide. Off-gasses from leaching may be controlled with a wet scrubber, which uses a caustic solution as the scrubbing medium. Three plants reported a tungsten carbide leaching operation but only one controls off-gasses. The water use and discharge rates for these plants are presented in Table V-5 (page 3218).

Although tungsten carbide leaching wet air pollution control was not sampled prior to proposal, raw wastewater data were available from a cobalt sludge leaching scrubber presented as a combined wastewater sample in Table V-15 (page 3234). This combined sample contains scrubber liquor, and crystallization and acid wash decant wastewater. The wastewater characteristics for the two scrubbers are expected to be similar because of the similarities in the raw materials and processes used. The wastewater sample collected from the analogous wet scrubber stream contains treatable concentrations of toxic metals, ammonia, and suspended solids, and an acidic pH.

Following proposal, sampling data for this subdivision were acquired through a self-sampling effort made at the specific request of EPA. These data (shown in Table V-22, page 3257) show treatable concentrations of chromium and lead, thus corroborating the data used at proposal.

TUNGSTEN CARBIDE WASH WATER

After leaching, tungsten carbide is washed with water in order to remove any traces of acid and other contaminants. The wash water may be discharged or further processes to recover dissolved metals such as cobalt and then recycled to the leaching step. Table V-6 (page 3218) presents the water use and discharge rates for these two plants.

Although tungsten carbide wash water was not sampled prior to proposal, raw wastewater data were available from a secondary tungsten post-leaching wash water. The wastewater characteristics for the two wash waters were expected to be similar due to the similarities in the raw materials and processes used. The wastewater sample collected from the analogous wash water stream (shown in Table V-14, page 3230), contains toxic metals and suspended solids above treatable limits.

Following proposal, sampling data for this subdivision were acquired through a self-sampling effort at the specific request

of EPA. These data (presented in Table V-22, page 3257) show treatable concentrations of chromium, cobalt and tungsten, thus corroborating the data used at proposal.

COBALT SLUDGE LEACHING WET AIR POLLUTION CONTROL

When cobalt sludges are leached with acid, off-gasses are controlled with a wet air pollution control device. The scrubber uses a dilute caustic solution as the scrubbing medium which neutralizes the acidic off-gasses and removes contaminants. The water use and discharge rates for this wastewater stream are presented in Table V-7 (page 3219).

Combined wastewater sampling data including cobalt sludge leaching wet air pollution control is presented in Table V-15 (page 3234). This wastewater stream is characterized by the presence of treatable concentrations of cadmium, chromium, cobalt, copper, lead, nickel, silver, zinc, ammonia, and suspended solids, as well as an acidic pH.

CRYSTALLIZATION DECANT

After leaching cobalt sludge and tungsten carbide scrap with acid and filtering away the tungsten and undissolved impurities, cobalt is crystallized as an ammonium cobalt intermediate product. The excess crystallization liquor is decanted off and discarded. The water use and discharge rates for this wastewater stream are presented in Table V-8 (page 3219).

Sampling data for crystallization decant is presented in Table V-16 (page 3236). This wastewater stream is characterized by the presence of treatable concentrations of arsenic, cadmium, chromium, cobalt, copper, lead, nickel, silver, thallium, zinc, ammonia, and suspended solids, as well as an acidic pH.

ACID WASH DECANT

The ammonium cobalt crystals produced from cobalt sludge and scrap tungsten carbide are washed with dilute hydrochloric acid to remove all traces of ammonia, and to further purify the crystals. After washing the crystals, the acid is decanted off, and discharged. One plant reported generating this waste stream, and its water use and discharge rates are presented in Table V-9 (page 3219).

Sampling data for acid wash decant are presented in Table V-17 (page 3238). This waste stream is characterized by the presence of treatable concentrations of cadmium, chromium, cobalt, copper, lead, nickel, silver, zinc, ammonia, and suspended solids, as well as an acidic pH.

COBALT HYDROXIDE FILTRATE

After purifying the ammonium cobalt crystals, they are dissolved using various chemical systems and cobalt is precipitated as the

hydroxide. The cobalt hydroxide precipitate is filtered and the filtrate is discharged. The water use and discharge rates for this stream are shown in Table V-10 (page 3220).

Sampling data for cobalt hydroxide filtrate show an alkaline pH and elevated concentrations of antimony, arsenic, cyanide, lead, nickel, silver, zinc, ammonia, and suspended solids. These data are presented in Table V-18 (page 3243). Although not analytically determined, fluoride is expected to be present in this wastewater.

COBALT HYDROXIDE FILTER CAKE WASH

The cobalt hydroxide filter cake is washed with water in order to remove any residual alkalinity or other impurities and the wash water discharged. The water use and discharge rates for this wastewater stream are presented in Table V-11 (page 3220).

The sampling data for cobalt hydroxide filter cake wash water is presented in Table V-19 (page 3245). This wastewater stream is characterized by the presence of treatable concentrations of lead, nickel, zinc, and ammonia.

TABLE V-1

WATER USE AND DISCHARGE RATES FOR
TUNGSTEN DETERGENT WASH AND RINSE

(l/kkg of tungsten scrap washed)

Plant Code	Recycle or Reuse (%)	Production Normalized Water Use Flow	Production normalized Discharge Flow
	0	195	195

TABLE V-2

WATER USE AND DISCHARGE RATES FOR
TUNGSTEN LEACHING ACID

(l/kkg of tungsten produced)

Plant Code	Recycle or Reuse (%)	Production Normalized Water Use Flow	Production normalized Discharge Flow
	0	2571	2571
	100*	NR	0

* 100% reuse of process effluent in secondary silver recovery operation

TABLE V-3

WATER USE AND DISCHARGE RATES FOR
TUNGSTEN POST-LEACHING WASH AND RINSE

(l/kkg of tungsten produced)

Plant Code	Recycle or Reuse (%)	Production Normalized Water Use Flow	Production normalized Discharge Flow
	0	5143	5143

TABLE V-4

WATER USE AND DISCHARGE RATES FOR
SYNTHETIC SCHEELITE FILTRATE

(l/kkg of synthetic scheelite produced)

Plant Code	Recycle or Reuse (%)	Production Normalized Water Use Flow	Production normalized Discharge Flow
	0	16661	16661
	0	NR	NR
	0	6532	6532

TABLE V-5

WATER USE AND DISCHARGE RATES FOR
TUNGSTEN CARBIDE LEACHING WET AIR POLLUTION CONTROL

(l/kkg of tungsten carbide scrap leached)

Plant Code	Recycle or Reuse (%)	Production Normalized Water Use Flow	Production normalized Discharge Flow
	≥90	NR	1751

TABLE V-6

WATER USE AND DISCHARGE RATES FOR
TUNGSTEN CARBIDE WASH WATER

(l/kkg of tungsten carbide produced)

Plant Code	Recycle or Reuse (%)	Production Normalized Water Use Flow	Production normalized Discharge Flow
	100	NR	0
	0	8333	8333

TABLE V-7

WATER USE AND DISCHARGE RATES FOR
COBALT SLUDGE LEACHING WET AIR POLLUTION CONTROL

(l/kkg of cobalt produced from cobalt sludge)

Plant Code	Recycle or Reuse (%)	Production Normalized Water Use Flow	Production normalized Discharge Flow
	≥90	NR	35718

TABLE V-8

WATER USE AND DISCHARGE RATES FOR
CRYSTALLIZATION DECANT

(l/kkg of cobalt produced)

Plant Code	Recycle or Reuse (%)	Production Normalized Water Use Flow	Production normalized Discharge Flow
	0	41650	41650

TABLE V-9

WATER USE AND DISCHARGE RATES FOR
ACID WASH DECANT

(l/kkg of cobalt produced)

Plant Code	Recycle or Reuse (%)	Production Normalized Water Use Flow	Production normalized Discharge Flow
	0	19062	19062

TABLE V-10

WATER USE AND DISCHARGE RATES FOR
COBALT HYDROXIDE FILTRATE

(l/kkg of cobalt produced)

Plant Code	Recycle or Reuse (%)	Production Normalized Water Use Flow	Production normalized Discharge Flow
	0	56647	56647

TABLE V-11

WATER USE AND DISCHARGE RATES FOR
COBALT HYDROXIDE FILTER CAKE WASH

(l/kkg of cobalt produced)

Plant Code	Recycle or Reuse (%)	Production Normalized Water Use Flow	Production normalized Discharge Flow
	0	109035	109035

Table V-12

SECONDARY TUNGSTEN AND COBALT SUBCATEGORY
TUNGSTEN DETERGENT WASH AND RINSE
RAW WASTEWATER SAMPLING DATA

Pollutant	Sample Type†	Concentrations (mg/l) Source	Day 1	Day 2	Day 3
Toxic Pollutants					
114. antimony	1	<0.01		<0.05	0.05
	2	<0.01		<0.01	<0.01
115. arsenic	1	<0.01		0.14	0.5
	2	<0.01		<0.1	<0.1
117. beryllium	1	<0.005		<0.1	<0.5
	2	<0.005		<0.005	<0.005
118. cadmium	1	<0.02		1.2	2
	2	<0.02		0.04	0.08
119. chromium (total)	1	<0.02		19.2	26
	2	<0.02		1.1	0.8
120. copper	1	<0.05		296	520
	2	<0.05		17.6	11.5
122. lead	1	<0.05		<200	<200
	2	<0.05		<10	<5
123. mercury	1	<0.0002		<0.0002	<0.002
	2	<0.0002		<0.0002	<0.002
124. nickel	1	0.5		2,560	4,270
	2	0.5		110	93.6

Table V-12 (Continued)

SECONDARY TUNGSTEN AND COBALT SUBCATEGORY
TUNGSTEN DETERGENT WASH AND RINSE
RAW WASTEWATER SAMPLING DATA

Pollutant	Sample Type†	Concentrations (mg/l) Source	Day 1	Day 2	Day 3
Toxic Pollutants (continued)					
125. selenium	1	<0.01		<0.01	<0.1
	2	<0.01		<0.01	<0.01
126. silver	1	<0.01		<0.01	<0.01
	2	<0.01		<0.01	<0.01
127. thallium	1	<0.01		<0.01	<0.01
	2	<0.01		<0.01	<0.01
128. zinc	1	0.08		<2	<2
	2	0.08		<0.5	<1
Nonconventional Pollutants					
Acidity	1	<1		<1	<1
	2	<1		<1	<1
Alkalinity	1	40		590	320
	2	40		200	120
Aluminum	1	0.2		30	40
	2	0.2		1.7	0.3
Ammonia Nitrogen	1	2.0		2.1	0.29
	2	2.0		1.6	1.9

Table V-12 (Continued)

SECONDARY TUNGSTEN AND COBALT SUBCATEGORY
TUNGSTEN DETERGENT WASH AND RINSE
RAW WASTEWATER SAMPLING DATA

Pollutant	Sample Type†	Concentrations (mg/l) Source	Day 1	Day 2	Day 3
Nonconventional Pollutants (continued)					
Barium	1	<0.05		<1	<5
	2	<0.05		<0.05	<0.05
Boron	1	<0.1		<10	<10
	2	<0.1		<1	<1
Calcium	1	25.7		70	70
	2	25.7		25.6	25.3
Chemical Oxygen Demand (COD)	1	110		4,700	68
	2	110		2,000	102
Chloride	1	11		24	41
	2	11		15	13
Cobalt	1	<0.05		384	135
	2	<0.05		19.1	2.95
Fluoride	1	0.64		0.35	0.29
	2	0.64		0.5	0.24
Iron	1	<0.5		1,760	1,190
	2	<0.5		72.5	49
Magnesium	1	4.5		10	<10
	2	4.5		6.8	6.9

Table V-12 (Continued)

SECONDARY TUNGSTEN AND COBALT SUBCATEGORY
TUNGSTEN DETERGENT WASH AND RINSE
RAW WASTEWATER SAMPLING DATA

Pollutant	Sample Type†	Concentrations (mg/l) Source	Day 1	Day 2	Day 3
Nonconventional Pollutants (continued)					
Manganese	1	<0.05		7	5
	2	<0.05		0.4	0.15
Molybdenum	1	<0.05		<5	<5
	2	<0.05		<0.5	<0.5
Phosphate	1	0.82		630	3,300
	2	0.82		150	13
Sodium	1	4.5		196	350
	2	4.5		88.9	46.5
Sulfate	1	590		1,700	3,700
	2	590		1,400	80
Tin	1	<0.05		<10	<10
	2	<0.05		<0.1	<0.5
Titanium	1	<0.05		<1	<5
	2	<0.05		<0.5	<0.05
Total Organic Compound (TOC)	1	<1		390	710
	2	<1		14	16

Table V-12 (Continued)

SECONDARY TUNGSTEN AND COBALT SUBCATEGORY
TUNGSTEN DETERGENT WASH AND RINSE
RAW WASTEWATER SAMPLING DATA

Pollutant	Sample Type†	Concentrations (mg/l) Source	Day 1	Day 2	Day 3
Nonconventional Pollutants (continued)					
Total Solids (TS)	1	250		52,000	53,000
	2	250		3,300	1,200
Vanadium	1	<0.05		<1	<1
	2	<0.05		<0.05	<0.05
Yttrium	1	<0.05		<1	<5
	2	<0.05		<0.05	<0.05
Conventional Pollutants					
Oil and Grease	1	<1		<1	<1
	1	<1		240	18
Total Suspended Solids (TSS)	1	19		42,000	36,000
	2	19		82	90
pH (standard units)	1	7.60		6.68	5.74
	2	7.60		6.54	6.19

†Sample Type Code: 1 - One-time grab
2 - Manual composite during intermittent process operation

Table V-13

SECONDARY TUNGSTEN AND COBALT SUBCATEGORY
TUNGSTEN LEACHING ACID
RAW WASTEWATER SAMPLING DATA

Pollutant	Sample Type†	Concentrations (mg/l) Source	Day 1	Day 2	Day 3
Toxic Pollutants					
114. antimony	1	<0.01		<0.1	
115. arsenic	1	<0.01		1.8	
117. beryllium	1	<0.0005		<0.5	
118. cadmium	1	<0.02		6	
119. chromium (total)	1	<0.02		38	
120. copper	1	<0.05		2,890	
122. lead	1	<0.05		<500	
123. mercury	1	<0.0002		<0.0002	
124. nickel	1	0.5		13,900	
125. selenium	1	<0.01		<0.05	
126. silver	1	<0.01		1.4	
127. thallium					
128. zinc	1	0.08		108	

Table V-13 (Continued)

SECONDARY TUNGSTEN AND COBALT SUBCATEGORY
TUNGSTEN LEACHING ACID
RAW WASTEWATER SAMPLING DATA

Pollutant	Sample Type†	Concentrations (mg/l) Source	Day 1	Day 2	Day 3
Nonconventional Pollutants					
Acidity	1	<1		1,000	
Alkalinity	1	40		<1	
Aluminum	1	0.2		70	
Ammonia Nitrogen	1	2.0		2.0	
Barium	1	<0.05		<5	
Boron	1	<0.1		<50	
Calcium	1	25.7		90	
Chemical Oxygen Demand (COD)	1	110		13,000	
Chloride	1	11		61,000	
Cobalt	1	<0.05		445	
Fluoride	1	0.64		1.0	
Iron	1	<0.5		25,900	
Magnesium	1	4.5		<10	
Manganese	1	<0.05		220	

Table V-13 (Continued)

SECONDARY TUNGSTEN AND COBALT SUBCATEGORY
TUNGSTEN LEACHING ACID
RAW WASTEWATER SAMPLING DATA

Pollutant	Sample Type†	Concentrations (mg/l) Source	Day 1	Day 2	Day 3
Nonconventional Pollutants (continued)					
Molybdenum	1	<0.05		<25	
Phosphate	1	0.82		39,000	
Sodium	1	4.5		20	
Sulfate	1	590		240	
Tin	1	<0.05		<25	
Titanium	1	<0.05		<5	
Total Organic Carbon (TOC)	1	<1		43	
Total Solids (TS)	1	250		200,000	
Vanadium	1	<0.05		5	
Yttrium	1	<0.05		<5	
Conventional Pollutants					
Oil and Grease	1	<1		<1	
Total Suspended Solids (TSS)	1	19		50,000	

Table V-13 (Continued)

SECONDARY TUNGSTEN AND COBALT SUBCATEGORY
TUNGSTEN LEACHING ACID
RAW WASTEWATER SAMPLING DATA

Pollutant	Sample Type†	Concentrations (mg/l) Source	Day 1	Day 2	Day 3
Conventional Pollutants (continued)					
pH (standard units)	1	7.60		0.89	

†Sample Type Code:
1 - One-time grab
2 - Manual composite during intermittent process operation
3 - 8-hour manual composite
4 - 8-hour automatic composite
5 - 24-hour manual composite
6 - 24-hour automatic composite

Table V-14

SECONDARY TUNGSTEN AND COBALT SUBCATEGORY
TUNGSTEN POST-LEACHING WASH AND RINSE
RAW WASTEWATER SAMPLING DATA

Pollutant	Sample Type†	Concentrations (mg/l) Source	Day 1	Day 2	Day 3
Toxic Pollutants					
114. antimony	2	<0.01		<0.1	
115. arsenic	2	<0.01		0.45	
117. beryllium	2	<0.0005		<0.5	
118. cadmium	2	<0.02		2	
119. chromium (total)	2	<0.02		34	
120. copper	2	<0.05		2,380	
122. lead	2	<0.05		<100	
123. mercury	2	<0.0002		0.0013	
124. nickel	2	0.5		4,710	
125. selenium	2	<0.01		<0.1	
126. silver	2	<0.01		3	
127. thallium					
128. zinc	2	0.08		38	

SECONDARY TUNGSTEN AND COBALT SUBCATEGORY
TUNGSTEN POST-LEACHING WASH AND RINSE
RAW WASTEWATER SAMPLING DATA

Pollutant	Sample Type†	Concentrations (mg/l) Source	Day 1	Day 2	Day 3
Nonconventional Pollutants					
Acidity	2	<1		190	
Alkalinity	2	40		<1	
Aluminum	2	0.2		30	
Ammonia Nitrogen	2	2.0		1.4	
Barium	2	<0.05		<5	
Boron	2	<0.1		10	
Calcium	2	25.7		70	
Chemical Oxygen Demand (COD)	2	110		75	
Chloride	2	11		27,000	
Cobalt	2	<0.05		165	
Fluoride	2	0.64		0.36	
Iron	2	<0.5		7,650	
Magnesium	2	4.5		<10	
Manganese	2	<0.05		65	

Table V-14 (Continued)

SECONDARY TUNGSTEN AND COBALT SUBCATEGORY
TUNGSTEN POST-LEACHING WASH AND RINSE
RAW WASTEWATER SAMPLING DATA

Pollutant	Sample Type†	Concentrations (mg/l) Source	Day 1	Day 2	Day 3
Nonconventional Pollutants (continued)					
Molybdenum	2	<0.05		10	
Phosphate	2	0.82		39,000	
Sodium	2	4.5		4,050	
Sulfate	2	590		12	
Tin	2	<0.05		<5	
Titanium	2	<0.05		<5	
Total Organic Carbon (TOC)	2	<1		9	
Total Solids (TS)	2	250		61,000	
Vanadium	2	<0.05		<5	
Yttrium	2	<0.05		<5	
Conventional Pollutants					
Oil and Grease	1	<1		3	
Total Suspended Solids (TSS)	2	19		14,000	

Table V-14 (Continued)

SECONDARY TUNGSTEN AND COBALT SUBCATEGORY
TUNGSTEN POST-LEACHING WASH AND RINSE
RAW WASTEWATER SAMPLING DATA

Pollutant	Sample Type†	Concentrations (mg/l) Source	Day 1	Day 2	Day 3
Conventional Pollutants (continued)					
pH (standard units)	2	7.60		1.31	

†Sample Type Code:
1 - One-time grab
2 - Manual composite during intermittent process operation
3 - 8-hour manual composite
4 - 8-hour automatic composite
5 - 24-hour manual composite
6 - 24-hour automatic composite

Table V-15

SECONDARY TUNGSTEN AND COBALT SUBCATEGORY
WASTEWATER STORAGE TANK - CRYSTALLIZATION AND ACID WASH DECANTS, AND
COBALT SLUDGE LEACHING WET AIR POLLUTION CONTROL
RAW WASTEWATER SAMPLING DATA

Pollutant	Sample Type†	Concentrations (mg/l) Source	Day 1	Day 2	Day 3
Toxic Pollutants					
114. antimony	1	0.023	0.20		
115. arsenic	1	0.001	<0.001		
117. beryllium	1	<0.001	0.006		
118. cadmium	1	<0.001	7.5		
119. chromium (total)	1	0.018	6.6		
120. copper	1	0.070	640		
121. cyanide (total)					
122. lead	1	0.003	10		
123. mercury	1	<0.0002	0.010		
124. nickel	1	0.17	2,000		
125. selenium	1	0.011	<0.001		
126. silver	1	0.008	7.0		
127. thallium	1	<0.001	0.55		
128. zinc	1	420	320		

Table V-15 (Continued)

SECONDARY TUNGSTEN AND COBALT SUBCATEGORY
WASTEWATER STORAGE TANK - CRYSTALLIZATION AND ACID WASH DECANTS, AND
COBALT SLUDGE LEACHING WET AIR POLLUTION CONTROL
RAW WASTEWATER SAMPLING DATA

Pollutant	Sample Type†	Concentrations (mg/l) Source	Day 1	Day 2	Day 3
Nonconventional Pollutants					
Ammonia Nitrogen	1	0.07	6,500		
Chloride	1	<1	83,000		
Cobalt	1	0.24	2,000		
Iron	1	0.30	620		
Phenolics		<0.001	0.014		
Titanium	1	0.10	7.0		
Total Solids (TS)	1	16	100,000		
Conventional Pollutants					
Oil and Grease	1	11	6.1		
Total Suspended Solids (TSS)	1	<4	900		
pH (standard units)	1	7.1	0		

†Sample Type Code: 1 - One-time grab

Table V-16

SECONDARY TUNGSTEN AND COBALT SUBCATEGORY
CRYSTALLIZATION DECANT
RAW WASTEWATER SAMPLING DATA

Pollutant	Sample Type†	Concentrations (mg/l) Source	Day 1	Day 2	Day 3
Toxic Pollutants					
114. antimony	1	0.023	<0.001		
115. arsenic	1	0.001	3.4		
117. beryllium	1	<0.001	0.16		
118. cadmium	1	<0.001	1.4		
119. chromium (total)	1	0.018	1.1		
120. copper	1	0.070	470		
121. cyanide (total)					
122. lead	1	0.003	5.4		
123. mercury	1	<0.0002	0.0005		
124. nickel	1	0.17	7,600		
125. selenium	1	0.011	<0.001		
126. silver	1	0.008	6.5		
127. thallium	1	<0.001	1.9		
128. zinc	1	420	1,200		

Table V-16 (Continued)

SECONDARY TUNGSTEN AND COBALT SUBCATEGORY
CRYSTALLIZATION DECANT
RAW WASTEWATER SAMPLING DATA

Pollutant	Sample Type†	Concentrations (mg/l) Source	Day 1	Day 2	Day 3
Nonconventional Pollutants					
Ammonia Nitrogen	1	0.07	26,000		
Chloride	1	<1	160,000		
Cobalt	1	0.24	1,100		
Iron	1	0.30	1,200		
Phenolics		<0.001	0.019		
Titanium	1	0.10	7.5		
Total Solids (TS)	1	16	280,000		
Conventional Pollutants					
Oil and Grease	1	11	<1		
Total Suspended Solids (TSS)	1	<4	160		
pH (standard units)	1	7.1	0.1		

†Sample Type Code: 1 - One-time grab

Table V-17

SECONDARY TUNGSTEN AND COBALT SUBCATEGORY
ACID WASH DECANT
RAW WASTEWATER SAMPLING DATA

Pollutant	Sample Type†	Concentrations (mg/l) Source	Day 1	Day 2	Day 3
Toxic Pollutants					
114. antimony	1	0.023	<0.001		
	1	0.023	0.74		
	1	0.023	0.04		
	1	0.023	NA		
115. arsenic	1	0.001	<0.001		
	1	0.001	0.18		
	1	0.001	0.15		
	1	0.001	NA		
117. beryllium	1	<0.001	0.003		
	1	<0.001	0.12		
	1	<0.001	<0.001		
	1	<0.001	<0.001		
118. cadmium	1	<0.001	8.3		
	1	<0.001	6.3		
	1	<0.001	4.8		
	1	<0.001	5.4		
119. chromium (total)	1	0.018	2.1		
	1	0.018	0.86		
	1	0.018	0.73		
	1	0.018	0.68		

Table V-17 (Continued)

SECONDARY TUNGSTEN AND COBALT SUBCATEGORY
ACID WASH DECANT
RAW WASTEWATER SAMPLING DATA

Pollutant	Sample Type†	Concentrations (mg/l) Source	Day 1	Day 2	Day 3
Nonconventional Pollutants					
120. copper	1	0.070	920		
	1	0.070	710		
	1	0.070	7.1		
	1	0.070	67		
122. lead	1	0.003	15		
	1	0.003	9.0		
	1	0.003	8.8		
	1	0.003	9.1		
123. mercury	1	<0.0002	0.058		
	1	<0.0002	<0.0002		
	1	<0.0002	<0.0002		
	1	<0.0002	<0.0002		
124. nickel	1	0.17	3,000		
	1	0.17	1,000		
	1	0.17	220		
	1	0.17	66		
125. selenium	1	0.011	<0.001		
	1	0.011	<0.001		
	1	0.011	0.18		
	1	0.011	NA		

Table V-17 (Continued)

SECONDARY TUNGSTEN AND COBALT SUBCATEGORY
ACID WASH DECANT
RAW WASTEWATER SAMPLING DATA

Pollutant	Sample Type†	Concentrations (mg/l) Source	Day 1	Day 2	Day 3
Toxic Pollutants (continued)					
126. silver	1	0.008	5.5		
	1		2.5		
	1		0.3		
	1		0.78		
127. thallium	1	<0.001	0.56		
	1		0.05		
	1		<0.001		
	1		<0.001		
128. zinc	1	420	460		
	1		100		
	1		78		
	1		46		
Nonconventional Pollutants					
Ammonia Nitrogen	1	0.07	10,000		
	1		3,400		
	1		700		
	1		150		
Chloride	1	<1	120,000		
	1	<1	83,000		
	1	<1	74,000		
	1	<1	76,000		

Table V-17 (Continued)

SECONDARY TUNGSTEN AND COBALT SUBCATEGORY
ACID WASH DECANT
RAW WASTEWATER SAMPLING DATA

Pollutant	Sample Type†	Concentrations (mg/l) Source	Day 1	Day 2	Day 3
Nonconventional Pollutants (continued)					
Cobalt	1	0.24	1,100		
	1	0.24	1,000		
	1	0.24	360		
	1	0.24	150		
Iron	1	0.30	590		
	1	0.30	300		
	1	0.30	70		
	1	0.30	20		
Phenolics	1	<0.001	<0.001		
	1	<0.001	0.440		
	1	<0.001	0.003		
	1	<0.001	0.490		
Titanium	1	0.10	13		
	1	0.10	6.0		
	1	0.10	1.7		
	1	0.10	0.9		
Total Solids (TS)	1	16	80,000		
	1	16	5,800		
	1	16	10,000		
	1	16	4,300		

Table V-17 (Continued)

SECONDARY TUNGSTEN AND COBALT SUBCATEGORY
ACID WASH DECANT
RAW WASTEWATER SAMPLING DATA

Pollutant	Sample Type†	Concentrations (mg/l) Source	Day 1	Day 2	Day 3
Conventional Pollutants					
Oil and Grease	1	11	<1		
	1	11	<1		
	1	11	<1		
	1	11	5.7		
Total Suspended Solids (TSS)	1	<4	940		
	1	<4	71		
	1	<4	17		
	1	<4	<4		
pH (standard units)	1	7.1	0		
	1	7.1	0		
	1	7.1	0		
	1	7.1	0		

†Sample Type Code: 1 - One-time grab

Table V-18

SECONDARY TUNGSTEN AND COBALT SUBCATEGORY
COBALT HYDROXIDE FILTRATE
RAW WASTEWATER SAMPLING DATA

Pollutant	Sample Type†	Concentrations (mg/l) Source	Day 1	Day 2	Day 3
Toxic Pollutants					
114. antimony	1	0.023	0.5		
115. arsenic	1	0.001	0.7		
117. beryllium	1	<0.001	<0.001		
118. cadmium	1	<0.001	0.18		
119. chromium (total)	1	0.018	<0.001		
120. copper	1	0.070	0.19		
121. cyanide (total)	1	0.009	0.31		
122. lead	1	0.003	1.4		
123. mercury	1	<0.0002	<0.0002		
124. nickel	1	0.17	1.4		
125. selenium	1	0.011	0.2		
126. silver	1	0.008	1.5		
127. thallium	1	<0.001	0.24		
128. zinc	1	420	0.72		

Table V-18 (Continued)

SECONDARY TUNGSTEN AND COBALT SUBCATEGORY
COBALT HYDROXIDE FILTRATE
RAW WASTEWATER SAMPLING DATA

Pollutant	Sample Type†	Concentrations (mg/l) Source	Day 1	Day 2	Day 3
Nonconventional Pollutants					
Ammonia Nitrogen	1	0.07	14,000		
Chloride	1	<1	42,000		
Cobalt	1	0.24	2.8		
Iron	1	0.30	0.63		
Molybdenum	1	0.75	0.006		
Titanium	1	0.10	0.15		
Total Solids (TS)	1	16	86,000		
Conventional Pollutants					
Oil and Grease		11	3.9		
Total Suspended Solids (TSS)	1	<4	66		
pH (standard units)	1	7.1	12.7		

†Sample Type Code: 1 - One-time grab

Table V-19

SECONDARY TUNGSTEN AND COBALT SUBCATEGORY
COBALT HYDROXIDE FILTER CAKE WASH
RAW WASTEWATER SAMPLING DATA

Pollutant	Sample Type†	Concentrations (mg/l) Source	Day 1	Day 2	Day 3
Toxic Pollutants					
114. antimony	2	0.023	0.007		
115. arsenic	2	0.001	0.009		
117. beryllium	2	<0.001	<0.001		
118. cadmium	2	<0.001	0.010		
119. chromium (total)	2	0.018	<0.001		
120. copper	2	0.070	0.10		
121. cyanide (total)	2	0.009	0.015		
122. lead	2	0.003	0.98		
123. mercury	2	<0.0002	<0.0002		
124. nickel	2	0.17	1.3		
125. selenium	2	0.011	<0.001		
126. silver	2	0.008	0.05		
127. thallium	2	<0.001	<0.001		
128. zinc	2	420	0.4		

Table V-19 (Continued)

SECONDARY TUNGSTEN AND COBALT SUBCATEGORY
COBALT HYDROXIDE FILTER CAKE WASH
RAW WASTEWATER SAMPLING DATA

Pollutant	Sample Type†	Concentrations (mg/l) Source	Day 1	Day 2	Day 3
Nonconventional Pollutants					
Ammonia Nitrogen	2	0.07	220		
Chloride	2	<1	<1		
Cobalt	2	0.24	0.18		
Iron	2	0.30	0.19		
Phenolics	2	<0.001	<0.001		
Titanium	2	0.10	<0.10		
Total Solids (TS)	2	16	<1		
Conventional Pollutants					
Oil and Grease	1	11	11		
Total Suspended Solids (TSS)	2	<4	<4		
pH (standard units)	2	7.1	9.7		

†Sample Type Code: 2 - Manual composite during intermittent process operation

Table V-20

SECONDARY TUNGSTEN AND COBALT SUBCATEGORY
TREATMENT PLANT SAMPLING DATA - PLANT A

Pollutant	Sample Type†	Concentrations (mg/l) Source	Day 1	Day 2	Day 3
Toxic Pollutants					
114. antimony	3	<0.01	<0.01	<0.1	<0.05
	6	<0.01	0.13	<0.01	<0.01
115. arsenic	3	<0.01	<0.01	<0.09	<0.1
	6	<0.01	<0.01	<0.01	<0.01
117. beryllium	3	<0.0005	<0.005	<0.05	<0.05
	6	<0.0005	<0.005	<0.005	<0.005
118. cadmium	3	<0.02	0.04	0.8	0.6
	6	<0.02	<0.02	<0.02	<0.02
119. chromium (total)	3	<0.02	0.32	6.2	6.4
	6	<0.02	<0.02	<0.02	<0.02
120. copper	3	<0.05	71.7	950	518
	6	<0.05	0.35	0.7	<0.05
122. lead	3	<0.05	2.35	73.5	<10
	6	<0.05	<0.5	<0.3	<0.5
123. mercury	3	<0.0002	<0.0002	<0.0002	0.011
	6	<0.0002	<0.0002	<0.0002	<0.0002
124. nickel	3	0.5	145	2,130	955
	6	0.5	5.35	4.6	1.85

Table V-20 (continued)

SECONDARY TUNGSTEN AND COBALT SUBCATEGORY
TREATMENT PLANT SAMPLING DATA - PLANT A

Pollutant	Sample Type†	Concentrations (mg/l) Source	Day 1	Day 2	Day 3
Toxic Pollutants (Cont'd)					
125. selenium	3	<0.01	<0.01	<0.1	<0.01
	6	<0.01	<0.01	<0.1	<0.01
126. silver	3	<0.01	0.04	1	0.4
	6	<0.01	<0.02	0.02	<0.01
127. thallium	3	<0.01	<0.05		<0.5
	6	<0.01	<0.02	<0.02	<0.02
128. zinc	3	0.08	15.4	89	25.4
	6	0.08	1.46	0.74	0.16
Nonconventional Pollutants					
Acidity	3	<1	10	1,400	130
	6	<1	<1	<1	<1
Alkalinity	3	40	<1	<1	<1
	6	40	13	16	19
Aluminum	3	0.2	0.4	12	6
	6	0.2	<0.1	<0.1	<0.1
Ammonia Nitrogen	3	2.0	0.45	2.3	1.7
	6	2.0	1.2	1.3	1.4
Barium	3	<0.05	<0.05	<0.5	<0.5
	6	<0.05	<0.05	<0.05	<0.05
Boron	3	<0.1	<1	<10	<2
	6	<0.1	0.2	0.1	0.2

Table V-20 (continued)

SECONDARY TUNGSTEN AND COBALT SUBCATEGORY
TREATMENT PLANT SAMPLING DATA - PLANT A

Pollutant	Sample Type†	Concentrations (mg/l) Source	Day 1	Day 2	Day 3
Nonconventional Pollutants (Cont'd)					
Calcium	3	25.7	31.6	41	38
	6	25.7	745	762	808
Chemical Oxygen Demand (COD)	3	110	56	4,300	6,140
	6	110	160	120	130
Chloride	3	11	310	8,300	4,200
	6	11	1,100	240	1,200
Cobalt	3	<0.05	5.75	75.5	37
	6	<0.05	4.25	2.9	1.3
Fluoride	3	0.64	0.21	0.72	0.52
	6	0.64	5.8	4.9	0.67
Iron	3	<0.5	150	3,440	1,300
	6	<0.5	0.15	1.35	<0.15
Magnesium	3	4.5	7.4	8	8
	6	4.5	2.0	1.9	1.8
Manganese	3	<0.05	4.5	59.5	28
	6	<0.05	2.5	2.35	1.45
Molybdenum	3	<0.05	<0.5	<5	<0.5
	6	<0.05	<0.05	<0.05	<0.05
Phosphate	3	0.82	860	16,000	6,600
	6	0.82	15	8.4	39

Table V-20 (continued)

SECONDARY TUNGSTEN AND COBALT SUBCATEGORY
TREATMENT PLANT SAMPLING DATA - PLANT A

Pollutant	Sample Type†	Concentrations (mg/l) Source	Day 1	Day 2	Day 3
Nonconventional Pollutants (continued)					
Sodium	3	4.5	9.3	33	610
	6	4.5	14.7	15.7	21.2
Sulfate	3	590	470	93	91
	6	590	670	1,200	7,600
Tin	3	<0.05	6.15	9	<0.5
	6	<0.05	<0.05	<0.1	<0.1
Titanium	3	<0.05	<0.05	<0.5	<0.5
	6	<0.05	<0.05	<0.05	<0.05
Total Organic Carbon (TOC)	3	<1	13	47	78
	6	<1	15	8.4	39
Total Solids (TS)	3	250	2,000	25,000	13,000
	6	250	4,000	3,500	3,400
Vanadium	3	<0.05	<0.05	0.5	<0.5
	6	<0.05	<0.05	0.05	<0.05
Yttrium	3	<0.05	<0.05	0.5	<0.5
	6	<0.05	<0.05	0.05	<0.05

Table V-20 (continued)

SECONDARY TUNGSTEN AND COBALT SUBCATEGORY
TREATMENT PLANT SAMPLING DATA - PLANT A

Pollutant	Sample Type†	Concentrations (mg/l) Source	Day 1	Day 2	Day 3
Conventional Pollutants					
Oil and Grease	1	<1	110	3	14
	1	<1		<1	14
Total Suspended Solids (TSS)	3	19	630	160	1,920
	6	19	16	5	<1
pH (standard units)	3	7.60	3.83	1.84	2.26
	6	7.60	5.70	5.58	6.47

†Sample Type Code:
1 - One-time grab
2 - Manual composite during intermittent process operation
3 - 8-hour manual composite
4 - 8-hour automatic composite
5 - 24-hour manual composite
6 - 24-hour automatic composite

Table V-21

SECONDARY TUNGSTEN AND COBALT SUBCATEGORY
TREATMENT PLANT SAMPLING DATA - PLANT B

Pollutant	Sample Type†	Concentrations (mg/l) Source	Day 1	Day 2	Day 3
Toxic Pollutants					
114. antimony	1	0.023	0.93		
	1	0.023	8.0		
	2	0.023	0.014	10	0.18
	2	0.023	0.41		
115. arsenic	1	0.001	<0.001		
	1	0.001	0.040		
	2	0.001	<0.001	1.0	1.4
	2	0.001	0.27		
117. beryllium	1	<0.001	<0.001		
	1	<0.001	0.005		
	2	<0.001	0.004	<0.001	<0.001
	2	<0.001	0.08		
118. cadmium	1	<0.001	4.3		
	1	<0.001	2.6		
	2	<0.001	2.9	3.4	2.1
	2	<0.001	1.1		
119. chromium (total)	1	0.018	<0.001		
	1	0.018	0.21		
	2	0.018	0.06	<0.001	0.059
	2	0.018	0.084		
120. copper	1	0.070	24		
	1	0.070	52		
	2	0.070	42	62	32
	2	0.070	53		

Table V-21 (Continued)

SECONDARY TUNGSTEN AND COBALT SUBCATEGORY
TREATMENT PLANT SAMPLING DATA - PLANT B

Pollutant	Stream Code	Sample Type†	Concentrations (mg/l) Source	Day 1	Day 2	Day 3
Toxic Pollutants (Cont'd)						
121. cyanide (total)		1	0.009	0.033		
		1	0.009	0.43		
		1	0.009	0.68	0.16	0.16
		1	0.009	0.41		
122. lead		1	0.003	0.47		
		1	0.003	2.2		
		2	0.003	<0.001	0.23	0.02
		2	0.003	2.2		
123. mercury		1	<0.0002	<0.0002		
		1	<0.0002	<0.0002		
		2	<0.0002	<0.0002	<0.0002	<0.002
		2	<0.0002	<0.0002		
124. nickel		1	0.17	420		
		1	0.17	290		
		2	0.17	242	540	380
		2	0.17	150		
125. selenium		1	0.011	0.93		
		1	0.011	0.073		
		2	0.011	1.3	0.27	<0.001
		2	0.011	0.042		
126. silver		1	0.008	0.25		
		1	0.008	1.9		
		2	0.008	3.8	2.6	0.18
		2	0.008	3.6		

Table V-21 (Continued)

SECONDARY TUNGSTEN AND COBALT SUBCATEGORY
TREATMENT PLANT SAMPLING DATA - PLANT B

Pollutant	Sample Type†	Concentrations (mg/l) Source	Day 1	Day 2	Day 3
Toxic Pollutants (Cont'd)					
127. thallium	1	<0.001	0.62		
	1	<0.001	0.45		
	2	<0.001	0.68	0.60	0.43
	2	<0.001	1.1		
128. zinc	1	420	240		
	1	420	1.8		
	2	420	76	540	160
	2	420	36		
Nonconventional Pollutants					
Ammonia Nitrogen	1	0.07	23,000		
	1	0.07	13,000		
	2	0.07	13,000	16,000	14,000
	2	0.07	160		
Calcium	2	0.36		490	
Chloride	1	<1	88,000		
	1	<1	66,000		
	2	<1	66,000		64,000
	2	<1	40,000		
Cobalt	1	0.24	16		
	1	0.24	46		
	2	0.24		30	12
	2	0.24	22		

Table V-21 (Continued)

SECONDARY TUNGSTEN AND COBALT SUBCATEGORY
TREATMENT PLANT SAMPLING DATA - PLANT B

Pollutant	Sample Type†	Concentrations (mg/l) Source	Day 1	Day 2	Day 3
Nonconventional Pollutants (Cont'd)					
Iron	1	0.30	0.35		
	1	0.30	3.4		
	2	0.30	0.23	1.5	0.52
	2	0.30	24		
Magnesium	2	0.009		5.6	
Phenolics	1	<0.001	<0.001		
	1	<0.001	<0.001		
	1	<0.001	<0.001	<0.001	<0.001
	1	<0.001	0.016		
Sulfate	2	2.0		11	28
Titanium	1	0.10	0.10		
	1	0.10	0.40		
	2	0.10		0.30	0.20
	2	0.10	3.6		
Total Solids (TS)	1	16	61,000		
	1	16	80,000		
	2	16	110,000	120,000	110,000
	2	16	140,000		

Table V-21 (Continued)

SECONDARY TUNGSTEN AND COBALT SUBCATEGORY
TREATMENT PLANT SAMPLING DATA - PLANT B

Pollutant	Sample Type†	Concentrations (mg/l) Source	Day 1	Day 2	Day 3
Conventional Pollutants					
Oil and Grease	1	11	A		
	1	11	<1		
	1	11	11		
Total Suspended Solids (TSS)	1	<4	120		
	1	<4	460		
	2	<4	380	300	3,000
	2	<4	4,000		
pH (standard units)	1	7.1	7.2		
	1	7.1	8.2		
	2	7.1	8.8	8.4	
	2	7.1	10.7		

†Sample Type Code: 1 - One-time grab
2 - Manual composite during intermittent process operation

A = Sample destroyed

TABLE V-22

SECONDARY TUNGSTEN AND COBALT SAMPLING DATA
RAW WASTEWATER SELF SAMPLING DATA

Pollutant	Wastewater Pollutant Concentration (mg/l)	
Sample No.	88145	88146
Toxic Pollutants		
115. arsenic	0.022	<0.010
117. beryllium	<0.050	<0.050
118. cadmium	0.040	<0.050
119. chromium	0.120	0.100
120. copper	<0.100	<0.100
122. lead	0.480	<0.200
124. nickel	<0.200	<0.200
126. silver	<0.010	<0.010
128. zinc	<0.050	<0.050
Nonconventional Pollutants		
aluminum	<0.500	<0.500
ammonia-N	<0,02	0.21
cobalt	<0.500	14.500
fluoride	0.03	0.03
iron	2.250	0.390
manganese	0.060	<0.050
molybdenum	<0.050	<0.050
tin	13.0	(5.000
titanium	<0.200	<2.000
tungsten	<86.0	3.6
vanadium	2.800	<1.000

No. 88145 - Tungsten carbide leaching wet air pollution control
No. 88146 - Tungsten carbide wash water

THIS PAGE INTENTIONALLY LEFT BLANK

SECTION VI

SELECTION OF POLLUTANTS

Section V of this supplement presented data from secondary tungsten and cobalt plant sampling visits and subsequent chemical analyses. This section examines that data and discusses the selection or exclusion of toxic pollutants for potential limitation. Also, this section discusses the selection or exclusion of conventional and nonconventional pollutants for limitation.

Each pollutant selected for potential limitation is discussed in Section VI of Vol. I. That discussion provides information about the nature of the pollutant (i.e., whether it is a naturally occurring substance, processed metal, or a manufactured compound); general physical properties and the form of the pollutant; toxic effects of the pollutant in humans and other animals; and behavior of the pollutant in POTW at the concentrations expected in industrial discharges.

The discussion that follows describes the analysis that was performed to select or exclude toxic pollutants for further consideration for limitations and standards. The data from 14 wastewater samples from tungsten and cobalt plants are considered in this analysis. All 14 samples are raw wastewater. The samples are from streams numbered 468, 484, 470, 471, 064, 053, 056, 068, and 071. Pollutants will be selected for further consideration if they are present in concentrations treatable by the technologies considered in this analysis. In Section X, a final selection of the pollutants to be limited will be made based on relative factors.

CONVENTIONAL AND NONCONVENTIONAL POLLUTANT PARAMETERS

This study examined samples from secondary tungsten and cobalt plants for three conventional pollutant parameters (oil and grease, total suspended solids, and pH) and three nonconventional pollutant parameters (ammonia, cobalt and tungsten).

CONVENTIONAL AND NONCONVENTIONAL POLLUTANT PARAMETERS SELECTED

The conventional and nonconventional pollutants or pollutant parameters selected for limitation in this subcategory are:

ammonia	oil and grease
cobalt	total suspended solids (TSS)
tungsten	pH

Ammonia was found in eight of 14 samples analyzed at concentrations exceeding the concentration achievable by treatment (32 mg/l). The treatable concentrations ranged from

150 mg/l to 26,000 mg/l. Ammonia was found in treatable concentrations, and is used extensively in tungsten and cobalt processing, and therefore ammonia is selected for limitation in this subcategory.

Cobalt was found in 13 of 14 samples above its treatable concentration of 0.667 mg/l. The treatable concentrations ranged from 2.8 mg/l to 2,000 mg/l. Cobalt is a product in this subcategory, and is soluble in solutions at the pH values of several waste streams, and is therefore expected to be present in the wastewater. For these reasons, cobalt is selected for limitation in this subcategory.

Tungsten was determined in two samples of raw wastewater from this subcategory in a self-sampling effort conducted at the specific request of EPA. Tungsten was detected at 3.6 mg/l, which is greater than the 0.85 mg/l concentration achievable with treatment. In addition, it is expected to be present in the raw wastewaters from this subcategory based of its presence in the raw materials and production processes, and also because of its solubility in the various acids and bases used in these hydrometallurgical processes. For these reasons, tungsten is selected for limitation in this subcategory.

Oil and grease was observed above its treatable concentration (10.0 mg/l) in three of the 14 samples analyzed. The three treatable concentrations found are 11.0 mg/l, 18 mg/l, and 240 mg/l s. Two of these samples with high oil and grease concentrations are samples of the water used to remove oils from the raw material prior to tungsten leaching and would be predicted to have high oil and grease concentrations. Therefore, oil and grease is a pollutant parameter selected for limitation in this subcategory.

Total suspended solids (TSS) concentrations were found above the 2.6 mg/l concentration considered achievable by identified treatment technology in 12 of the 14 samples analyzed. Treatable concentrations ranged from 17 mg/l to 50,000 mg/l. Furthermore, most of the technologies used to remove toxic metals do so by converting these metals to precipitates. A limitation on total suspended solids helps ensure that sedimentation to remove precipitated toxic metals is effectively operating. For these reasons, total suspended solids is a pollutant parameter selected for limitation in this subcategory.

The pH values observed ranged from zero to 12.7. Five wastewater streams have pH values between zero and 1.31. Effective removal of toxic metals by precipitation requires careful control of pH. Therefore, pH is selected for limitation in this subcategory.

PRIORITY POLLUTANTS

The frequency of occurrence of the priority pollutants in the raw wastewater samples considered in this analysis is presented in Table VI-1. These data provide the basis for the categorization

of specific pollutants, as discussed below. Table VI-1 (page 3264) is based on the raw wastewater sampling data from streams 468, 470, 471, 487, 053, 056, 064, 068, and 071. The stream codes correspond to sample locations in Figures V-1 and V-2. Combined and treated wastewater data, streams 479, 473, 069, 062, 061, and 058 were not used in the frequency count.

TOXIC POLLUTANTS NEVER DETECTED

The toxic pollutants listed in Table VI-2 (page 3265) were not detected in any raw wastewater samples from this subcategory; therefore, they are not selected for consideration in establishing limitations:

TOXIC POLLUTANTS PRESENT BELOW CONCENTRATIONS ACHIEVABLE BY TREATMENT

The pollutants listed below are not selected for consideration in establishing limitations and standards because they were not found in any wastewater samples from this subcategory above concentrations considered achievable by existing or available treatment technologies. These pollutants are discussed individually following the list.

117. beryllium
125. selenium

Beryllium was detected above its analytical quantification limit in two of the 14 samples. The observed concentrations were 0.12 mg/l and 0.16 mg/l. Both of these values are below the 0.20 mg/l concentration considered achievable by identified treatment technology. Therefore, beryllium is not considered for limitation.

Selenium was detected above its analytical quantification limit in two of the 13 samples. The observed concentrations were 0.18 mg/l and 0.2 mg/l. Neither of these values are above the 0.2 mg/l concentration considered achievable by identified treatment technology. For this reason, selenium is not selected for limitation.

PRIORITY POLLUTANTS DETECTED IN A SMALL NUMBER OF SOURCES

The following pollutants were not selected for limitation because they were detected in the effluent from only a small number of sources within the subcategory and they are uniquely related to only those sources.

114. antimony
121. cyanide
123. mercury
127. thallium

Antimony was detected above its analytical quantification limit

in three of the 13 samples considered in the analysis. Two of the three values (0.5 mg/l, 0.74 mg/l) are above the 0.47 mg/l concentrations considered achievable by identified treatment technology. Antimony was not detected above its quantification limit in the other samples. Since antimony was only detected at one plant, it is not selected for limitation.

Cyanide was detected above its analytical quantification limit in only one sample analyzed. This value (0.31 mg/l) is above the 0.047 mg/l concentration considered achievable by identified treatment technology. However, cyanide is not expected to be present in the wastewater based on the raw materials and production processes involved. Therefore, cyanide is not selected for limitation.

Mercury was detected above its analytical quantification limit in four of the 14 samples considered in the analysis. One of the four values (0.058 mg/l) is above the 0.036 mg/l concentration considered achievable by identified treatment technology. Mercury was not detected in the other 10 samples. Since mercury was detected at treatable levels in only sample, it is not selected for limitation.

Thallium was detected above its analytical quantification limit in four of the 12 samples considered in the analysis. Three of the four values are above the 0.34 mg/l concentration considered achievable by identified treatment technology. Thallium was not detected in the other samples. Since thallium was detected at treatable levels at only one plant, it is not selected for limitation.

TOXIC POLLUTANTS SELECTED FOR FURTHER CONSIDERATION IN ESTABLISHING LIMITATIONS AND STANDARDS

The toxic pollutants listed below are selected for further consideration in establishing limitations and standards for this subcategory. The toxic pollutants selected are each discussed following the list.

115. arsenic
118. cadmium
119. chromium
120. copper
122. lead
124. nickel
126. silver
128. zinc

Arsenic was detected above its treatable concentration (0.34 mg/l) in five of 13 samples. The quantifiable concentrations ranged from 0.14 to 3.4 mg/l. Since arsenic was present in concentrations exceeding the concentration achievable by identified treatment technology, it is selected for consideration for limitation.

Cadmium was detected above its treatable concentration (0.049 mg/l) in 12 to 14 samples. The quantifiable concentrations ranged from 0.01 to 8.3 mg/l. Since cadmium was present in concentrations exceeding the concentration achievable by identified treatment technology, it is selected for consideration for limitation.

Chromium was detected above its treatable concentration (0.07 mg/l) in 12 of 14 samples. The quantifiable concentrations ranged from 0.68 to 38 mg/l. Since chromium was present in concentrations exceeding the concentration achievable by identified treatment technology, it is selected for consideration for limitation.

Copper was detected above its treatable concentration (0.39 mg/l) in 12 of 14 samples. The quantifiable concentrations ranged from 0.1 to 2,890 mg/l. Since copper was present in concentrations exceeding the concentration achievable by identified treatment technology, it is selected for consideration for limitation.

Lead was detected above its treatable concentration (0.08 mg/l) in eight of 14 samples. The quantifiable concentrations ranged from 0.98 to 15 mg/l. Since lead was present in concentrations exceeding the concentration achievable by identified treatment technology, it is selected for consideration for limitation.

Nickel was detected above its treatable concentration (0.22 mg/l) in all of the 14 samples. The quantifiable concentrations ranged from 1.3 to 13,900 mg/l. Since nickel was present in concentrations exceeding the concentration achievable by identified treatment technology, it is selected for consideration for limitation.

Silver was detected above its treatable concentration (0.07 mg/l) in nine to 14 samples. The quantifiable concentrations ranged from 0.05 to 7.0 mg/l. Since silver was present in concentrations exceeding the concentration achievable by identified treatment technology, it is selected for consideration for limitation.

Zinc was detected above its treatable concentration (0.23 mg/l) in 10 of 14 samples. The quantifiable concentrations ranged from 0.4 to 1,200 mg/l. Since zinc was present in concentrations exceeding the concentration achievable by identified treatment technology, it is selected for consideration for limitation.

Table VI-1

FREQUENCY OF OCCURRENCE OF PRIORITY POLLUTANTS SECONDARY TUNGSTEN AND COBALT SUBCATEGORY

Pollutant	Analytical Quantification Concentration (mg/l)(a)	Treatable Concentration (mg/l)(b)	Number of Streams Analyzed	Number of Samples Analyzed	Detected Below Quantification Concentration	Detected Below Treatable Concentration	Detected Above Treatable Concentration
114. antimony	0.100	0.47	8	13	10	1	2
115. arsenic	0.010	0.34	8	13	5	3	5
116. asbestos	10 MFL	10 MFL					
117. beryllium	0.010	0.20	8	14	12	2	0
118. cadmium	0.002	0.049	8	14	0	2	12
119. chromium	0.005	0.07	8	14	2	0	12
120. copper	0.009	0.39	8	14	0	2	12
121. cyanide (c)	0.02	0.047	2	2	1	0	1
122. lead	0.020	0.08	8	14	6	0	8
123. mercury	0.0001	0.036	8	14	10	3	1
124. nickel	.005	0.22	8	14	0	0	14
125. selenium	0.01	0.20	8	13	11	2	0
126. silver	0.02	0.07	8	14	4	1	9
127. thallium	0.100	0.34	6	12	8	1	3
128. zinc	0.050	0.23	8	14	4	0	10
Ammonia		32	8	14	NA	6	8
Oil and Grease	5.0	10.0	8	14	9	2	3
Total Suspended Solids (TSS)	1.0	2.6	8	14	2	0	12

(a) Analytical quantification concentration was reported with the data (see Section V).

(b) Treatable concentrations are based on performance of lime precipitation, sedimentation, and filtration.

(c) Analytical quantification concentration for EPA Method 335.2, Total Cyanide Methods for Chemical Analysis of Water and Wastes, EPA 600/4-79-020, March 1979.

TABLE VI-2

PRIORITY POLLUTANTS NEVER DETECTED

1. acenaphthene*
2. acrolein*
3. acrylonitrile*
4. benzene*
5. benzidine*
6. carbon tetrachloride (tetrachloromethane)*
7. chlorobenzene*
8. 1,2,4-trichlorobenzene*
9. hexachlorobenzene*
10. 1,2-dichloroethane*
11. 1,1,1-trichloroethane*
12. hexachloroethane*
13. 1,1-dichloroethane*
14. 1,1,2-trichloroethane*
15. 1,1,2,2-tetrachloroethane*
16. chloroethane*
17. bis (chloromethyl) ether (DELETED)*
18. bis (2-chloroethyl) ether*
19. 2-chloroethyl vinyl ether (mixed)*
20. 2-chloronaphthalene*
21. 2,4,6-trichlorophenol*
22. parachlorometa cresol*
23. chloroform (trichloromethane)*
24. 2-chlorophenol*
25. 1,2 dichlorobenzene*
26. 1,3-dichlorobenzene*
27. 1,4-dichlorobenzene*
28. 3,3'-dichlorobenzidine*
29. 1,1-dichloroethylene*
30. 1,2-trans-dichloroethylene*
31. 2,4-dichlorophenol*
32. 1,2-dichloropropane*
33. 1,2-dichloropropylene (1,3-dichloropropene)*
34. 2,4-dimethylphenol*
35. 2,4-dinitrotoluene*
36. 2,6-dinitrotoluene*
37. 1,2-diphenylhydrazine*
38. ethylbenzene*
39. fluoranthene*
40. 4-chlorophenyl phenyl ether*
41. 4-bromophenyl phenyl ether*
42. bis(2-chloroisopropyl) ether*
43. bis(2-choroethoxy) merhane*
    methylene chloride (dichloromethane)*
45. methyl chloride (chloromethane)*
46. methyl bromide (bromomethane)*
47. bromoform (tribromomethane)*

TABLE VI-2 (Continued)

PRIORITY POLLUTANTS NEVER DETECTED

48. dichlorobromomethane*
49. trichlorofluoromethane (DELETED)*
50. dichlorodifluoromethane (DELETED)*
51. chlorodibromomethane*
52. hexachlorobutadiene*
53. hexachlorocyclopentadiene*
54. isophorone*
55. naphthalene*
56. nitrobenzene*
57. 2-nitrophenol*
58. 4-nitrophenol*
59. 2,4-dinitrophenol*
60. 4,6-dinitro-o-cresol*
61. N-nitrosodimethylamine*
62. N-nitrosodiphenylamine*
63. N-nitrosodi-n-propylamine*
64. pentachlorophenol*
65. phenol*
66. bis(2-ethylhexyl) phthalate*
67. butyl benzyl phthalate*
68. di-n-butyl phrhalate*
69. di-n-octyl phthalate*
70. diethyl phthalate*
71. dimethyl phthalate*
72. benzo (a)anrhracene (1,2-benzanthracene)*
73. benzo (a)pyrene (3,4-benzopyrene)*
74. 3,4-benzofluoranthene*
75. benzo(k)fluoranthane (11,12-benzofluoranthene)*
76. chrysene*
77. acenaphthylene*
78. anthracene*
79. benzo(ghi)perylene (1,11-benzoperylene)*
80. fluorene*
81. phenanthrene*
82. dibenzo (a,h)anthracene (1,2,5,6-dibenzanthracene)*
83. indeno (1,2,3-cd)pyrene (w,e,-o-phenylenepyrene)*
84. pyrene*
85. tetrachloroethylene*
86. toluene*
87. trichloroethylene*
88. vinyl chloride (chloroethylene)*
89. aldrin*
90. dieldrin*
91. chlordane (technical mixture and metabolites)*
92. 4,4'-DDT*
93. 4,4'-DDE(p,p'DDX)*
94. 4'4'-DDD(p,p'TDE)*

TABLE VI-2 (Continued)

PRIORITY POLLUTANTS NEVER DETECTED

95. Alpha-endosulfan*
96. Beta-endosulfan*
97. endosulfan sulfate*
98. endrin*
99. endrin aldehyde*
100. heptachlor*
101. heptachlor epoxide*
102. Alpha-BHC*
103. Beta-BHC*
104. Gamma-BHC (lindane)*
105. Delta-BHC*
106. PCB-1242 (Arochlor 1242)*
107. PCB-1254 (Arochlor 1254)*
108. PCB-1221 (Arochlor 1221)*
109. PCB-1232 (Arochlor 1232)*
110. PCB-1248 (Arochlor 1248)*
111. PCB-1260 (Arochlor 1260)*
112. PCB-1016 (Arochlor 1016)*
113. toxaphene*
116. asbestos (Fibrous)
129. 2,3,7,8-tetra chlorodibenzo-p-dioxin (TCDD)

*We did not analyze for these pollutants in samples of raw wastewater from this subcategory. These pollutants are not believed to be present based on the Agency's best engineering judgment which includes consideration of raw materials and process operations.

THIS PAGE INTENTIONALLY LEFT BLANK

SECTION VII

CONTROL AND TREATMENT TECHNOLOGIES

The preceding sections of this supplement discussed the sources, flows, and characteristics of the wastewaters from secondary tungsten and cobalt plants. This section summarizes the description of these wastewaters and indicates the treatment technologies which are currently practiced in the secondary tungsten and cobalt subcategory for each waste stream. Secondly, this section presents the control and treatment options which were examined by the Agency for possible application to the secondary tungsten and cobalt subcategory.

CURRENT CONTROL AND TREATMENT PRACTICES

Control and treatment technologies are discussed in Section VII of Vol. I, and the basic principles of these technologies and the applicability to wastewater similar to that found in this subcategory are presented there. This section presents a summary of the control and treatment technologies that are currently being applied to each of the sources generating wastewater in this subcategory. As discussed in Section V, wastewater associated with the secondary tungsten and cobalt subcategory is characterized by the presence of the toxic metal pollutants, ammonia, oil and grease and suspended solids. This analysis is supported by the raw (untreated) wastewater data presented for specific sources as well as combined waste streams in Section V. Generally, these pollutants are present in each of the waste streams at concentrations above treatability, and these waste streams are commonly combined for treatment. Construction of one wastewater treatment system for combined treatment allows plants to take advantage of economic scale and in some instances to combine streams of different alkalinity to reduce treatment chemical requirements. Three plants in this subcategory currently have combined wastewater treatment systems. One plant has no treatment. All three treatment schemes consist of chemical precipitation and sedimentation with adding ammonia steam stripping preliminary treatment. Two options have been selected for consideration for BPT, BAT, NSPS, and pretreatment based on combined treatment of these compatible waste streams.

TUNGSTEN DETERGENT WASH AND RINSE

Tungsten scrap may be prepared for leaching by washing it with detergent and then rinsing it with water. The wastewater from this process is treated by lime and settle treatment of combined wastewater to precipitate metals before discharging the wash and rinse water.

TUNGSTEN LEACHING ACID

Tungsten scrap is leached with acid in order to remove impurities

from tungsten. The acid leachate contains significant concentrations of toxic metals. This wastewater stream, may be treated it in a combined wastewater system with lime and settle treatment technology to precipitate metals before discharge or alternatively, it may be routed to further processing to recover metals prior to treatment and discharge.

TUNGSTEN POST-LEACHING WASH AND RINSE

After leaching tungsten scrap the tungsten product may be washed with acid and rinsed with water in order to remove any traces of acid, and to further purify it. After using this process, lime and settle treatment of the combined wastewater is used to precipitate metals before discharging.

SYNTHETIC SCHEELITE FILTRATE

Both tungsten and tungsten carbide scrap may be processed into synthetic scheelite for use in a primary tungsten process. After oxidizing tungsten and dissolving the oxide in caustic, the scheelite is precipitated and the wastewater filtered away. The filtrate is discharged to lime and settle treatment of combined wastewater prior to discharge.

TUNGSTEN CARBIDE LEACHING WET AIR POLLUTION CONTROL

Hydrochloric acid fumes from the acid leaching of tungsten carbide scrap are controlled with a wet scrubber system. The wet scrubber process water is extensively recycled but produces a blowdown wastewater stream. This wastewater stream is treated with lime and settle prior to discharge.

TUNGSTEN CARBIDE WASH WATER

After leaching away the cobalt and impurities, tungsten carbide powder may be washed with water in order to remove any traces of acid. This wastewater stream may be discharged to a lime and settle system prior to discharge or recycled for further use in the carbide wash operation.

COBALT SLUDGE LEACHING WET AIR POLLUTION CONTROL

During the acid leaching of cobalt sludge, a wet scrubbing system may be used to control hydrochloric acid fumes. This wastewater stream is extensively recycled and the blowdown is treated with ammonia steam stripping, chemical precipitation and sedimentation prior to discharge.

CRYSTALLIZATION DECANT

After leaching tungsten carbide scrap with acid and filtering away the undissolved impurities, cobalt is crystallized as an ammonium cobalt intermediate. The excess crystallization liquor is decanted off, and discharged following treatment. Treatment for this wastewater stream consists of ammonia steam stripping

preliminary treatment, followed by chemical precipitation and sedimentation of a combined waste stream. The sludge from the clarifier is reacted with excess lime and then filtered using a filter press.

ACID WASH DECANT

The ammonium cobalt crystals may be washed several times with dilute hydrochloric acid. After washing the crystals, the acid is decanted off and discharged to treatment. This wastewater is combined with the crystallization decant water, and treated with ammonia steam stripping, chemical precipitation and sedimentation.

COBALT HYDROXIDE FILTRATE

After purifying the ammonium cobalt crystals, they are dissolved and cobalt is precipitated as the hydroxide. The cobalt hydroxide precipitate is filtered and the filtrate is discharged. This wastewater stream is combined with crystallization and acid wash decant wastewater and is treated with ammonia steam stripping and chemical precipitation and sedimentation.

COBALT HYDROXIDE FILTER CAKE WASH

The cobalt hydroxide filter cake may be washed with water in order to remove any traces of caustic or other impurities. It is discharged after treating it with chemical precipitation and sedimentation of a combined waste stream.

CONTROL AND TREATMENT OPTIONS

The Agency examined two control and treatment technology options that are applicable to the secondary tungsten and cobalt subcategory. The options selected for evaluation represent a combination of in-process flow reduction, preliminary treatment technologies applicable to individual waste streams, and end-of-pipe treatment technologies.

Option B was eliminated from consideration for promulgation because the two subdivisions identified for possible flow reduction were determined as being extensively recycled currently. Therefore, flow reduction beyond that considered in Option A is not applicable in this subcategory.

OPTION A

Option A for the secondary tungsten and cobalt subcategory requires control and treatment technologies to reduce the discharge to wastewater volume and pollutant mass. The Option A treatment scheme consists of chemical precipitation and sedimentation technology. Specifically, lime or some other alkaline compound is used to precipitate metal ions as metal hydroxides. The metal hydroxides and suspended solids settle out and the sludge is collected. Vacuum filtration is used to

dewater sludge.

Preliminary treatment consisting of ammonia steam stripping for waste streams containing treatable concentrations of ammonia is also included in Option A. Steam stripping is an efficient method for reducing the ammonia concentrations as well as recovering ammonia as a by-product. Steam stripping also prevents the transfer of ammonia to the air. Preliminary treatment for Option A also includes oil skimming, for waste streams containing treatable concentrations of oil and grease. Oil skimming is an efficient method for reducing the oil and grease concentration.

OPTION C

Option C for the secondary tungsten and cobalt subcategory consists of all control and treatment requirements of Option A (ammonia steam stripping, oil skimming, chemical precipitation and sedimentation) plus multimedia filtration technology added to the end of the Option A treatment scheme. Multimedia filtration is used to remove suspended solids, including precipitates of metals, beyond the concentration attainable by gravity sedimentation. The filter suggested is of the gravity, mixed media type, although other forms of filters, such as rapid sand filters or pressure filters would perform satisfactorily. The addition of filters also provides consistent removal during periods of time in which there are rapid increases in flows or loadings of pollutants to the treatment system.

SECTION VIII

COSTS, ENERGY, AND NONWATER QUALITY ASPECTS

This section presents a summary of compliance costs for the secondary tungsten and cobalt subcategory and a description of the treatment options and subcategory-specific assumptions used to develop these estimates. Together with the estimated pollutant reduction performance presented in Sections IX, X, XI, and XII of this supplement, these cost estimates provide a basis for evaluating each regulatory option. These cost estimates are also used in determining the probable economic impact to regulation on the subcategory at different pollutant discharge levels. In addition, this section addresses nonwater quality environmental impacts of wastewater treatment and control alternatives, including air pollution, solid waste, and energy requirements, which are specific to the secondary tungsten and cobalt subcategory.

TREATMENT OPTIONS FOR EXISTING SOURCES

As discussed in Section VII, two treatment options have been developed for existing secondary tungsten and cobalt sources. The options are summarized below and schematically presented in Figures X-1 and X-2.

OPTION A

Option A consists of ammonia steam stripping and oil-water separation preliminary treatment and chemical precipitation and sedimentation end-of-pipe technology.

OPTION C

Option C consists of ammonia steam stripping and oil-water separation preliminary treatment, and end-of-pipe treatment technology consisting of chemical precipitation, sedimentation, and multimedia filtration.

COST METHODOLOGY

Plant-by-plant compliance costs for the nonferrous metals manufacturing category have been revised as necessary following proposal. These revisions calculate incremental costs, above treatment already in-place, necessary to comply with the promulgated effluent limitations and standards. The costs developed for the final regulation are presented in Table VIII-1 (page 3276) for the direct dischargers, and in Table VIII-2 (page 3276) for the indirect dischargers.

Each of the general assumptions used to develop compliance costs is presented in Section VIII of Vol. I. Each subcategory contains a unique set of waste streams requiring certain subcategory-specific assumptions to develop compliance costs. For the

secondary tungsten and cobalt subcategory, only one assumption was made, namely that all chromium pollutant data are assumed to measure trivalent chromium. Therefore, chromium reduction is not required in the treatment scheme.

ENERGY REQUIREMENTS

Energy requirements for the two options considered are estimated at 1.15 x 106 kwh/yr and 1.185 x 106 kwh/yr for Options A and C, respectively. Option C, which includes filtration, is estimated to increase energy consumption over Option A by less than one percent. Option C represents roughly 15 percent of a typical plant's electrical energy usage. It is therefore concluded that the energy requirements of the treatment options considered will not have a significant impact on total plant energy consumption.

SOLID WASTE

Sludge generated in the secondary tungsten and cobalt subcategory is due to the precipitation of metal hydroxides and carbonates using lime or other chemicals. Sludges associated with the secondary tungsten and cobalt subcategory will necessarily contain quantities of toxic metal pollutants. Wastes generated by secondary metal industries can be regulated as hazardous. However, the Agency examined the solid wastes that would be generated at secondary nonferrous metals manufacturing plants by the suggested treatment technologies and believes they are not hazardous wastes under the Agency's regulations implementing Section 3001 of the Resource Conservation and Recovery Act. The one exception to this is solid wastes generated by cyanide precipitation. These sludges are expected to be hazardous and this judgment was included in this study. None of the non-cyanide wastes are listed specifically as hazardous. Nor are they likely to exhibit a characteristic of hazardous waste. This judgment is made based on the recommended technology of chemical precipitation and filtration. By the addition of a small excess (5 - 10%) of lime during treatment. similar sludges, specifically toxic metal bear-ing sludges, generated by other industries such as the iron and steel industry passed the Extraction Procedure (EP) toxicity test. See 40 CFR §261.24. Thus, the Agency believes that the wastewater sludges will similarly not be EP toxic if the recommended technology is applied.

Although it is the Agency's view that solid wastes generated as a result of these guidelines are not expected to be hazardous, generators of these wastes must test the waste to determine if the wastes meet any of the characteristics of hazardous waste (see 40 CFR $262.11).

If these wastes identified should be or are listed as hazardous, they will come within the scope of RCRA's "cradle to grave hazardous waste management program, requiring regulation from the point of generation to point of final disposition. EPA's generator standards would require generators of hazardous nonferrous metals manufacturing wastes to meet containerization,

labeling, recordkeeping, and reporting requirements; if plants dispose of hazardous wastes off-site, they would have to prepare a manifest which would track the movement of the wastes from the generator's premises to a permitted off-site treatment, storage, or disposal facility. See 40 CFR §262.20 (45 FR 33142 (May 19, 1980), as amended at 45 FR 86973 (December 31, 1980)). The transporter regulations require transporters of hazardous waste to comply with the manifest system to assure that the wastes are delivered to a permitted facility. See 40 CFR §263.20 (45 FR 33151 (May 19, 1980), as amended at 45 FR 86973 (December 31, 1980)). Finally, RCRA regulations establish standards for hazardous waste treatment, storage, and disposal facilities allowed to receive such wastes. See 40 CFR Part 464 (46 FR 2802 (January 12, 1981), 47 FR 32274 (July 26, 1982)).

Even if these wastes are not identified as hazardous, they still must be disposed of in compliance with the Subtitle D open dumping standards, implementing §4004 of RCRA. See 44 FR 53438 (September 13, 1979). The Agency has calculated as part of the costs for wastewater treatment the cost of hauling and disposing of these wastes.

The Agency estimates that the BPT regulation for secondary tungsten and cobalt manufacturing facilities will generate 563 metric tons of solid wastes (wet basis) in 1982 as a result of wastewater treatment. BAT for this subcategory should not increase sludge generation.

AIR POLLUTION

There is no reason to believe that any substantial air pollution problems will result from implementation of ammonia steam stripping, oil-water separation, chemical precipitation, sedimentation, and multimedia filtration. These technologies transfer pollutants to solid waste and are not likely to transfer pollutants to air.

TABLE VIII-1

COST OF COMPLIANCE FOR THE
SECONDARY TUNGSTEN AND COBALT SUBCATEGORY

Direct Dischargers

Option	Total Required Capital Cost (1982 Dollars)	Total Annual Cost (1982 Dollars)
A	42,900	173,000
B	NA	NA
C	60,900	182,700

NA - Not applicable, i.e., Option B eliminated for final regulation.

Table VIII-2

COST OF COMPLIANCE FOR THE
SECONDARY TUNGSTEN AND COBALT SUBCATEGORY

Indirect Dischargers

Option	Total Required Capital Cost (1982 Dollars)	Total Annual Cost (1982 Dollars)
A	8,500	5,300
C	16,300	8,800

SECTION IX

BEST PRACTICABLE CONTROL TECHNOLOGY CURRENTLY AVAILABLE

This section defines the effluent characteristics attainable through the application of best practicable control technology currently available (BPT). BPT reflects the existing performance by plants of various sizes, ages, and manufacturing processes within the secondary tungsten and cobalt subcategory, as well as the established performance of the model BPT treatment systems. Particular consideration is given to the treatment already in place at plants within the data base.

The factors considered in identifying BPT include the total cost of applying the technology in relation to the effluent reduction benefits from such application, the age of equipment and facilities involved, the manufacturing processes used, nonwater quality environmental impacts (including energy requirements), and other factors the Administrator considers appropriate. In general, the BPT level represents the average of the existing performances of plants of various ages, sizes, processes, or other common characteristics. Where existing performance is uniformly inadequate, BPT may be transferred from a different subcategory or category. Limitations based on transfer of technology are supported by a rationale concluding that the technology is, indeed, transferable, and a reasonable prediction that it will be capable of achieving the prescribed effluent limits (see Tanner s Council of America v. Train, 540 F.2d 1188 (4th Cir. 1976). BPT focuses on end-of-pipe treatment rather than process changes or internal controls, except where such practices are common industry practice.

TECHNICAL APPROACH TO BPT

The Agency studied the secondary tungsten and cobalt subcategory to identify the processes used the wastewaters generated and the treatment processes installed. Information was collected from the category using data collection portfolios, and specific plants were sampled and the wastewaters analyzed. In making technical assessments of data, reviewing manufacturing processes, and assessing wastewater treatment technology options, both indirect and direct dischargers have been considered as a single group. An examination of plants and processes did not indicate any process differences based on the type of discharge, whether it be direct or indirect.

As explained in Section IV, the secondary tungsten and cobalt subcategory has been subdivided into 11 potential wastewater sources. Since the water use, discharge rates, and pollutant characteristics of each of these wastewaters is potentially unique, effluent limitations will be developed for each of the 11 subdivisions.

For each of the subdivisions, a specific approach was followed for the development of BPT mass limitations. The first requirement to develop limitations is to account for production and flow variability from plant to plant. Therefore, a unit of production or production normalizing parameter (PNP) was determined for each wastewater stream which could then be related to the flow from the process to determine a production normalized flow. Selection of the PNP for each process element is discussed in Section IV. Each plant within the subcategory was then analyzed to determine which subdivisions were present, the specific flow rates generated for each subdivision and the specific production normalized flows for each subdivision. This analysis is discussed in detail in Section V. Nonprocess wastewaters such as rainfall runoff and noncontact cooling water are not considered in the analysis.

Production normalized flows for each subdivision were then analyzed to determine the flow to be used as part of the basis for BPT mass limitations. The selected flow (sometimes referred to as the BPT regulatory flow or BPT discharge rate) reflects the water use controls which are common practices within the subcategory. The BPT regulatory flow is based on the average of all applicable data. Plants with normalized flows above the average may have to implement some method of flow reduction to achieve the BPT limitations.

The second requirement to calculate mass limitations is the set of concentrations that are achievable by application of the BPT level of treatment technology. Section VII discusses the various control and technologies which are currently in place for each wastewater source. In most cases, the current control and treatment technologies consist of chemical precipitation and sedimentation (lime and settle technology) and a combination of reuse and recycle to reduce flow. Ammonia steam stripping is applied to streams with treatable concentrations of ammonia. Oil skimming is applied to streams with treatable concentrations of oil and grease.

Using these regulatory flows and the achievable concentrations, the next step is to calculate mass loadings for each wastewater source or subdivision. This calculation was made on a stream-by-stream basis, primarily because plants in this subcategory may perform one or more of the operations in various combinations.

The mass loadings (milligrams of pollutant per metric ton of production - mg/kkg) were calculated by multiplying the BPT regulatory flow (l/kkg) by the concentration achievable by the BPT level of treatment technology (mg/l) for each pollutant parameter to be limited under BPT. These mass loadings are the BPT effluent limitations.

The mass loadings which are allowed under BPT for each plant will be the sum of the individual mass loadings for the various wastewater sources or building blocks which are found at particular plants. Accordingly, all the wastewater generated

within a plant may be combined for treatment in a single or common treatment system, but the effluent limitations for these combined wastewaters are based on the various wastewater sources which actually contribute to the combined flow. This method accounts for the variety of combinations of wastewater sources and production processes which may be found at secondary tungsten and cobalt plants.

The Agency usually establishes wastewater limitations in terms of mass rather than concentrations. This approach prevents the use of dilution as a treatment method (except for controlling pH). The production normalized wastewater flow (l/kkg) is a link between the production operations and the effluent limitations. The pollutant discharge attributable to each operation can be calculated from the normalized flow and effluent concentration achievable by the treatment technology and summed to derive an appropriate limitation for each plant.

INDUSTRY COST AND POLLUTANT REMOVAL ESTIMATES

In balancing costs in relation to pollutant removal estimates, EPA considers the volume and nature of existing discharges, the volume and nature of discharges expected after application of BPT, the general environmental effects of the pollutants, and the cost and economic impacts of the required pollution control level. The Act does not require or permit consideration of water quality problems attributable to particular point sources or industries, or water quality improvements in particular water quality bodies. Accordingly, water quality considerations were not the basis for selecting the proposed BPT. See Weyerhaeuser Company v. Costle, 590 F.2d 1011 (D.C. Cir. 1978).

The methodology for calculating pollutant removals and plant compliance costs is discussed in Section X. Tables X-1 (page 3300) and XII-1 (page 3324) show the pollutant removal estimates for each treatment option for direct and indirect dischargers, respectively. Compliance costs for this subcategory are presented in Tables VIII-1 and VIII-2 (page 3276).

BPT OPTION SELECTION

The technology basis for the BPT limitations is Option A, chemical precipitation and sedimentation technology to remove metals and solids from combined wastewaters and to control pH, oil skimming to remove oil and grease, and ammonia steam stripping to remove ammonia. Chemical precipitation and sedimentation technology is already in-place at three direct dischargers in the subcategory. The pollutants specifically proposed for regulation at BPT are copper, nickel, cobalt, tungsten, ammonia, oil and grease, TSS, and pH.

Implementation of the BPT limitations will remove annually an estimated 150,656 kg of toxic metals, and 186,400 kg of ammonia. Capital cost of achieving BPT is estimated at 442,900, with annual cost estimated at 460,900.

More stringent technology options were not selected for BPT since they require in-process changes or end-of-pipe technologies less widely practiced in the subcategory, and, therefore, are more appropriately considered under BAT.

The BPT treatment scheme is presented in Figure IX-1 (page 3285).

Ammonia steam stripping is demonstrated at six facilities in the nonferrous metals manufacturing category. These facilities are treating ammonia bearing wastewaters associated with the production of primary tungsten, primary columbium and tantalum, primary molybdenum, secondary tungsten and cobalt, and primary zirconium and hafnium. EPA believes that performance data from the iron and steel manufacturing category provide a valid measure of this technology's performance on nonferrous metals manufacturing category wastewater because raw wastewater concentrations of ammonia are of the same order of magnitude in the respective raw wastewater matrices.

Chemical analysis data were collected of raw wastewater (treatment influent) and treated wastewater (treatment effluent) from one coke plant of the iron and steel manufacturing category. A contractor for EPA, using sampling and chemical analysis protocols, collected six paired samples in a two-month period. These data are the data base for determining the effectiveness of ammonia steam stripping technology and are contained within the public record supporting this document. Ammonia treatment at this coke plant consisted of two steam stripping columns in series with steam injected countercurrently to the flow of the wastewater. A lime reactor for pH adjustment separated the two stripping columns.

The Agency has verified the proposed steam stripping performance values using steam stripping data collected at a primary zirconium-hafnium plant which has raw ammonia levels as high as any in the nonferrous metals manufacturing category. Data collected by the plant represent almost two years of daily operations, and support the long-term mean used to establish treatment effectiveness.

In addition, data submitted by a primary columbium-tantalum plant, which also has significant raw ammonia levels, verify the promulgated steam stripping performance values.

Oil skimming is demonstrated in the nonferrous metals manufacturing category. Although no secondary tungsten and cobalt plants have oil skimming in place, it is necessary to reduce oil and grease concentrations in the discharge from this subcategory.

WASTEWATER DISCHARGE RATES

A BPT discharge rate is calculated for each subdivision based on the average of the flows of the existing plants, as determined

from analysis of dcp. The discharge rate is used with the achievable treatment concentrations to determine BPT effluent limitations. Since the discharge rate may be different for each wastewater source, separate production normalized discharge rates for each of the 11 wastewater sources are discussed below and summarized in Table IX-1 (page 3285). The discharge rates are normalized on a production basis by relating the amount of wastewater generated to the mass of the intermediate product which is produced by the process associated with the waste stream in question. These production normalizing parameters, or PNPs, are also listed in Table IX-1.

Section V of this document further describes the discharge flow rates and presents the water use and discharge flow rates for each plant by subdivision in Tables V-1 through V-11.

TUNGSTEN DETERGENT WASH AND RINSE

The proposed and promulgated BPT wastewater discharge rate for tungsten detergent wash and rinse is 195 liters/kkg of tungsten scrap washed. This rate is allocated only for those plants which wash and rinse oily tungsten scrap before leaching it with acid. Water use and wastewater discharge rates are presented in Table V-1. The BPT flow is based on the only water use rate reported.

TUNGSTEN LEACHING ACID

The proposed and promulgated BPT wastewater discharge rate for tungsten leaching acid is 2,571 liters/kkg to tungsten produced.

This rate is allocated only for those plants which leach impurities away from tungsten scrap. Water use and wastewater discharge rates are presented in Table V-2 (page 3217). The BPT flow is based on the only water use rate reported.

TUNGSTEN POST-LEACHING WASH AND RINSE

The BPT wastewater discharge rate for tungsten post-leaching wash and rinse is 5,143 liters/kkg of tungsten produced This rate is allocated only for those plants which wash and rinse tungsten powder after purifying it with a leaching operation. Water use and wastewater discharge rates are presented in Table V-3 (page 3217). The BPT flow is based on the only water use rate reported.

SYNTHETIC SCHEELITE FILTRATE

The BPT wastewater discharge rate proposed and promulgated for synthetic scheelite filtrate is 16,661 liters/kkg of synthetic scheelite produced. This rate is allocated only for those plants which manufacture synthetic scheelite from tungsten or tungsten carbide scrap. Water use and wastewater discharge rates are presented in Table V-4 (page 3218). The BPT flow is based on the only water use rate reported.

TUNGSTEN CARBIDE LEACHING WET AIR POLLUTION CONTROL

The BPT wastewater discharge rate proposed and promulgated for tungsten leaching wet air pollution control is 1,751 liters/kkg of tungsten carbide scrap leached. This rate is allocated only for those plants which control acid fumes from a tungsten carbide scrap leaching operation with a wet scrubber. Water use and wastewater discharge rates are presented in Table V-5 (page 3218). The BPT flow is based on the reported water use rate which includes extensive recycle of the scrubber liquor.

TUNGSTEN CARBIDE WASH WATER

The BPT wastewater discharge rate for tungsten carbide wash water is 8,333 liters/kkg of tungsten carbide produced. This rate is allocated only for those plants which produce tungsten carbide by leaching tungsten carbide scrap, and then wash the product with water. Water use and wastewater discharge rates are presented in Table V-6 (page 3218). The BPT flow is based on the reported water use rate.

COBALT SLUDGE LEACHING WET AIR POLLUTION CONTROL

The BPT wastewater discharge rate proposed and promulgated for cobalt sludge leaching wet air pollution control is 35,781 liters/kkg of cobalt produced from sludge. This rate is allocated only for those plants which leach cobalt sludge as a preliminary step in the recovery of cobalt, and control acid fumes with a wet scrubber. Water use and wastewater discharge rates are presented in Table V-7 (page 3219). The BPT flow of 35,781 liters/kkg is based on the reported water use rate and includes extensive recycle of the scrubber liquor.

CRYSTALLIZATION DECANT

The BPT wastewater discharge rate proposed and promulgated for crystallization decant is 41,650 liters/kkg of cobalt produced. This rate is allocated only for those plants which use an ammonium-cobalt crystallization process to recover cobalt from secondary sources such as cobalt sludges and tungsten carbide scrap. Water use and wastewater discharge rates are presented in Table V-8 (page 3219).

ACID WASH DECANT

The BPT wastewater discharge rate proposed and promulgated for acid wash decant is 19,062 liters/kkg to cobalt produced. This rate is allocated only for those plants which wash cobalt crystals with acid to recover cobalt from secondary sources such as sludges and tungsten carbide scrap. Water use and wastewater discharge rates are presented in Table V-9 (page 3219). The BPT flow is based on the reported water use rate.

COBALT HYDROXIDE FILTRATE

The BPT wastewater discharge rate proposed and promulgated for cobalt hydroxide filtrate is 56,647 liters/kkg to cobalt produced. This rate is allocated only for those plants which recover cobalt as cobalt hydroxide from secondary sources such as sludges and tungsten carbide scrap. Water use and wastewater discharge rates are presented in Table V-10 (page 3220). The BPT flow is based on the reported water use rate.

COBALT HYDROXIDE FILTER CAKE WASH

The BPT wastewater discharge rate proposed and promulgated for cobalt hydroxide filter cake wash is 109,035 liters/kkg of cobalt produced. This rate is allocated only for those plants which recover cobalt hydroxide from secondary sources such as sludges and tungsten carbide scrap and wash the cobalt hydroxide filter cake with water. Water use and wastewater discharge rates are presented in Table V-11 (page 3220). The BPT flow is based on the reported water use rate.

REGULATED POLLUTANT PARAMETERS

The raw wastewater concentrations from individual operations and the subcategory as a whole were examined to select certain pollutant parameters for limitation. This examination and evaluation was presented in Section VI. A total of eight pollutants or pollutant parameters are selected for limitation under BPT and are listed below:

120. copper
124. nickel
ammonia
cobalt
tungsten
oil and grease
TSS
pH

EFFLUENT LIMITATIONS

The treatable concentrations achievable by application of the promulgated BPT are discussed in Section VII of Vol. I and summarized there in Table VII-21 (page 248), with one exception. The exception is the cobalt treatment effectiveness value. EPA promulgated the cobalt treatment effectiveness value based upon data from the porcelain enameling category. Petitioners indicated that the wastewater streams from the tungsten-cobalt subcategory cannot be treated to the same level as in the porcelain enameling category because they contain higher concentrations of complexed cobalt than were found in the porcelain-enameling category. In response to these concerns, the Agency reviewed and analyzed new data supplied by the petitioner on cobalt treatment effectiveness at levels found in the effluent

from the tungsten-cobalt subcategory. EPA is revising the long term mean treatment effectiveness value from 0.03 mg/l to 0.667 mg/l. This corresponds to a one day maximum of 2.76 mg/l and a monthly average of 1.21 mg/l.

These treatable concentrations (both one day maximum and monthly average values) are multiplied by the BPT normalized discharge flows summarized in Table IX-1 (page 3285) to calculate the mass of pollutants allowed to be discharged per mass of product. The results of these calculations in milligrams of pollutant per kilogram of product represent the BPT effluent limitations and are presented in Table IX-2 (page 3286) for each individual waste stream.

Table IX-1

BPT WASTEWATER DISCHARGE RATES FOR THE SECONDARY TUNGSTEN AND COBALT SUBCATEGORY

Wastewater Stream	BPT Normalized Discharge Rate (l/kkg)	BPT Normalized Discharge Rate (gal/ton)	Production Normalizing Parameter
Tungsten detergent wash and rinse	195	47	tungsten scrap washed
Tungsten leaching acid	2,571	618	tungsten produced
Tungsten post-leaching wash	5,143	1,235	tungsten produced
Synthetic scheelite filtrate	16,661	4,002	synthetic scheelite produced
Tungsten carbide leaching wet air pollution control	1,751	421	tungsten carbide scrap leached
Tungsten carbide wash water	8,333	2,002	tungsten carbide produced
Cobalt sludge leaching wet air pollution control	35,781	8,595	cobalt produced from cobalt sludge
Crystallization decant	41,650	10,004	cobalt produced
Acid wash decant	19,062	4,579	cobalt produced
Cobalt hydroxide filtrate	56,647	13,607	cobalt produced
Cobalt hydroxide filter cake wash	109,035	26,190	cobalt produced

TABLE IX-2

BPT MASS LIMITATIONS FOR THE
SECONDARY TUNGSTEN AND COBALT SUBCATEGORY

(a) Tungsten Detergent Wash and Rinse BPT

Pollutant or pollutant property	Maximum for any one day	Maximum for monthly average
	mg/kg (lb/million lbs) of tungsten scrap washed	
Arsenic	0.408	0.181
Cadmium	0.066	0.029
Chromium	0.086	0.035
*Copper	0.371	0.195
Lead	0.082	0.039
*Nickel	0.374	0.248
Silver	0.080	0.033
Zinc	0.285	0.119
*Ammonia	25.990	11.430
*Cobalt	0.768	0.337
*Tungsten	1.357	0.542
*Oil and Grease	3.900	2.340
*TSS	7.995	3.803
pH	Within the range of 7.5 to 10.0 at all times	

(b) Tungsten Leaching Acid BPT

Pollutant or pollutant property	Maximum for any one day	Maximum for monthly average
	mg/kg (lb/million lbs) of tungsten produced	
Arsenic	5.373	2.391
Cadmium	0.874	0.386
Chromium	1.131	0.463
*Copper	4.885	2.571
Lead	1.080	0.514
*Nickel	4.936	3.265
Silver	1.054	0.437
Zinc	3.754	1.568
*Ammonia	342.700	150.700
*Cobalt	10.130	4.448
*Tungsten	17.890	7.147
*Oil and Grease	51.420	30.850
*TSS	105.400	50.130
*pH	Within the range of 7.5 to 10.0 at all times	

*Regulated Pollutant

TABLE IX-2 (Continued)

BPT MASS LIMITATIONS FOR THE
SECONDARY TUNGSTEN AND COBALT SUBCATEGORY

(c) Tungsten Post-Leaching Wash BPT

Pollutant or pollutant property	Maximum for any one day	Maximum for monthly average
	mg/kg (lb/million lbs) of tungsten produced	
Arsenic	10.750	4.783
Cadmium	1.749	0.771
Chromium	2.263	0.926
*Copper	9.772	5.143
Lead	2.160	1.029
*Nickel	9.875	6.532
Silver	2.109	0.874
Zinc	7.509	3.137
*Ammonia	685.600	301.400
*Cobalt	20.263	8.847
*Tungsten	35.800	14.300
*Oil and Grease	102.900	61.720
*TSS	210.900	100.300
*pH Within the range of 7.5 to 10.0 at all times		

(d) Synthetic Scheelite Filtrate BPT

Pollutant or pollutant property	Maximum for any one day	Maximum for monthly average
	mg/kg (lb/million lbs) of synthetic scheelite produced	
Arsenic	34.820	15.490
Cadmium	5.665	2.499
Chromium	7.331	2.999
*Copper	31.660	16.660
Lead	6.998	3.332
*Nickel	31.990	21.160
Silver	6.831	2.832
Zinc	24.330	10.160
*Ammonia	2,221.000	976.300
*Cobalt	65.644	28.824
*Tungsten	116.000	46.320
*Oil and Grease	333.200	199.900
*TSS	683.100	324.900
*pH Within the range of 7.5 to 10.0 at all times		

*Regulated Pollutant

TABLE IX-2 (Continued)

BPT MASS LIMITATIONS FOR THE
SECONDARY TUNGSTEN AND COBALT SUBCATEGORY

(e) Tungsten Carbide Leaching Wet Air Pollution Control BPT

Pollutant or pollutant property	Maximum for any one day	Maximum for monthly average
mg/kg (lb/million lbs) of tungsten carbide scrap leached		
Arsenic	3.660	1.628
Cadmium	0.595	0.263
Chromium	0.770	0.315
*Copper	3.327	1.751
Lead	0.735	0.350
*Nickel	3.362	2.224
Silver	0.718	0.298
Zinc	2.556	1.068
*Ammonia	233.400	102.600
*Cobalt	6.899	3.029
*Tungsten	12.190	4.868
*Oil and Grease	35.020	21.010
*TSS	71.790	34.140
*pH Within the range of 7.5 to 10.0 at all times		

(f) Tungsten Carbide Wash Water BPT

Pollutant or pollutant property	Maximum for any one day	Maximum for monthly average
mg/kg (lb/million lbs) of tungsten carbide produced		
Arsenic	17.420	7.750
Cadmium	2.833	1.250
Chromium	3.667	1.500
*Copper	15.830	8.333
Lead	3.500	1.667
*Nickel	16.000	10.580
Silver	3.417	1.417
Zinc	12.170	5.083
*Ammonia	1,111.000	488.300
*Cobalt	32.832	14.416
*Tungsten	58.000	23.170
*Oil and Grease	166.700	100.000
*TSS	341.700	162.500
*pH Within the range of 7.5 to 10.0 at all times		

*Regulated Pollutant

TABLE IX-2 (Continued)

BPT MASS LIMITATIONS FOR THE
SECONDARY TUNGSTEN AND COBALT SUBCATEGORY

(g) Cobalt Sludge Leaching Wet Air Pollution Control BPT

Pollutant or pollutant property	Maximum for any one day	Maximum for monthly average
mg/kg (lb/million lbs) of cobalt produced from cobalt sludge		
Arsenic	74.780	33.280
Cadmium	12.170	5.367
Chromium	15.740	6.441
*Copper	67.980	35.780
Lead	15.030	7.156
*Nickel	68.700	45.440
Silver	14.670	6.083
Zinc	52.240	21.830
*Ammonia	4,770.000	2,097.000
*Cobalt	140.977	61.901
*Tungsten	249.000	99.470
*Oil and Grease	715.600	429.400
*TSS	1,467.000	697.700
*pH Within the range of 7.5 to 10.0 at all times		

(h) Crystallization Decant BPT

Pollutant or pollutant property	Maximum for any one day	Maximum for monthly average
mg/kg (lb/million lbs) of cobalt produced		
Arsenic	87.050	38.730
Cadmium	14.160	6.248
Chromium	18.330	7.497
*Copper	79.140	41.650
Lead	17.490	8.330
*Nickel	79.970	52.900
Silver	17.080	7.081
Zinc	60.810	25.410
*Ammonia	5,552.000	2,441.000
*Cobalt	164.101	72.055
*Tungsten	289.900	115.800
*Oil and Grease	833.000	499.800
*TSS	1,708.000	812.200
*pH Within the range of 7.5 to 10.0 at all times		

*Regulated Pollutant

TABLE IX-2 (Continued)

BPT MASS LIMITATIONS FOR THE
SECONDARY TUNGSTEN AND COBALT SUBCATEGORY

(i) Acid Wash Decant BPT

Pollutant or pollutant property	Maximum for any one day	Maximum for monthly average
	mg/kg (lb/million lbs) of cobalt produced	
Arsenic	39.840	17.730
Cadmium	6.481	2.859
Chromium	8.387	3.431
*Copper	36.220	19.060
Lead	8.006	3.812
*Nickel	36.600	24.210
Silver	7.815	3.241
Zinc	27.830	11.630
*Ammonia	2,541.000	1,117.000
*Cobalt	75.104	32.977
*Tungsten	132.700	52.990
*Oil and Grease	381.200	228.700
*TSS	781.500	371.700
*pH Within the range of 7.5 to 10.0 at all times		

(j) Cobalt Hydroxide Filtrate BPT

Pollutant or pollutant property	Maximum for any one day	Maximum for monthly average
	mg/kg (lb/million lbs) of cobalt produced	
Arsenic	118.400	52.680
Cadmium	19.260	8.497
Chromium	24.920	10.200
*Copper	107.600	56.650
Lead	23.790	11.330
*Nickel	108.800	71.940
Silver	23.230	9.630
Zinc	82.700	34.550
*Ammonia	7,551.000	3,320.000
*Cobalt	223.189	97.999
*Tungsten	394.300	157.500
*Oil and Grease	1,133.000	679.800
*TSS	2,323.000	1,105.000
*pH Within the range of 7.5 to 10.0 at all times		

*Regulated Pollutant

TABLE IX-2 (Continued)

BPT MASS LIMITATIONS FOR THE
SECONDARY TUNGSTEN AND COBALT SUBCATEGORY

(k) Cobalt Hydroxide Filter Cake Wash BPT

Pollutant or pollutant property	Maximum for any one day	Maximum for monthly average
	mg/kg (lb/million lbs) of cobalt produced	
Arsenic	227.900	101.400
Cadmium	37.070	16.360
Chromium	47.980	19.630
*Copper	207.200	109.000
Lead	45.790	21.810
*Nickel	209.300	138.500
Silver	44.700	18.540
Zinc	159.200	66.510
*Ammonia	14,530.000	6,389.000
*Cobalt	429.598	188.631
*Tungsten	758.900	303.100
*Oil and Grease	2,181.000	1,308.000
*TSS	4,470.000	2,126.000
*pH Within the range of 7.5 to 10.0 at all times		

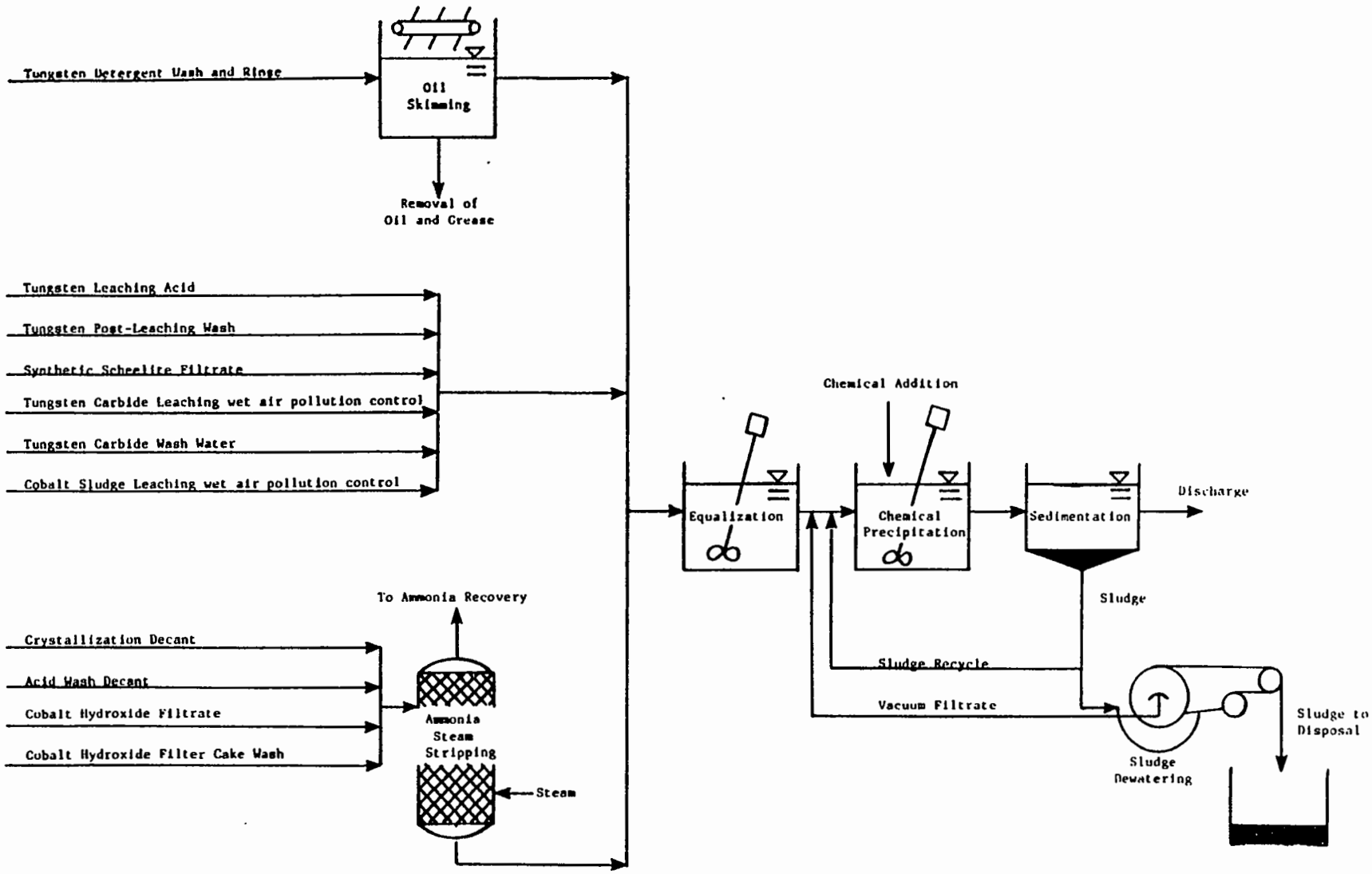

Figure IX-1

BPT TREATMENT SCHEME FOR THE SECONDARY TUNGSTEN AND COBALT SUBCATEGORY

SECTION X

BEST AVAILABLE TECHNOLOGY ECONOMICALLY ACHIEVABLE

These effluent limitations are based on the best control and treatment technology used by a specific point source within the industrial category or subcategory, or by another category from which it is transferable. Emphasis is placed on additional treatment techniques applied at the end of the treatment systems currently used, as well as reduction of the amount of water used and discharged, process control, and treatment technology optimization.

TECHNICAL APPROACH TO BAT

The Agency reviewed a wide range of technology options and evaluated the available possibilities to ensure that the most effective and beneficial technologies were used as the basis of BAT. To accomplish this, the Agency elected to examine two technology options whicn could be applied to the secondary tungsten and cobalt subcategory as alternatives for the basis of BAT effluent limitations.

For the development of BAT effluent limitations, mass loadings were calculated for each wastewater source or subdivision in the subcategory using the same technical approach as described in Section IX for BPT limitations development. The differences in the mass loadings for BPT and BAT are due to increased treatment effectiveness achievable with the more sophisticated BAT treatment technology and reductions in the effluent flows allocated to various waste streams.

The treatment technologies considered for BAT are summarized below:

Option A (Figure X-1, page 3300) is based on:

- Preliminary treatment with oil skimming (where required)
- Preliminary treatment with ammonia steam stripping (where required)
- Chemical precipitation and sedimentation

Option C (Figure X-2, page 3301) is based on:

- Preliminary treatment with oil skimming (where required)
- Preliminary treatment with ammonia steam stripping (where required)
- Chemical precipitation and sedimentation
- Multimedia filtration

The two options examined for BAT are discussed in greater detail on the following pages. The first option considered (Option A)

is the same as the BPT treatment and control technology which was presented in the previous section. The other option represents substantial progress toward the reduction of pollutant discharges above and beyond the progress achievable by BPT.

OPTION A

Option A for the secondary tungsten and cobalt subcategory is equivalent to the control and treatment technologies which were analyzed for BPT in Section IX (see Figure X-1, page 3300). The BPT end-of-pipe treatment scheme includes chemical precipitation and sedimentation, with ammonia steam stripping and oil skimming preliminary treatment of wastewaters containing treatable concentrations of ammonia and oil and grease (see Figure IX-1, page 3285). The discharge rates for Option A are equal to the discharge rates allocated to each stream as a BPT discharge flow.

OPTION C

Option C for the secondary tungsten and cobalt subcategory consists of all control and treatment requirements of Option A (ammonia steam stripping, oil skimming, chemical precipitation and sedimentation) plus multimedia filtration technology added at the end of the Option A treatment scheme (see Figure X-2, page 3301). Multimedia filtration is used to remove suspended solids, including precipitates of toxic metals, beyond the concentrations attainable by gravity sedimentation. The filter suggested is of the gravity, mixed media type, although other forms of filters, such as rapid sand filters or pressure filters, would perform satisfactorily.

INDUSTRY COST AND POLLUTANT REMOVAL ESTIMATES

As one means of evaluating each technology option, EPA developed estimates of the pollutant removals and the compliance costs associated with each option. The methodologies are described below.

POLLUTANT REMOVAL ESTIMATES

A complete description of the methodology used to calculate the estimated pollutant removal, or benefit, achieved by the application of the various treatment options is presented in Section X of the General Development Document. The pollutant removal estimates have been revised from proposal based on comments and on new data; however, the methodology for calculating pollutant removals has not changed. The data used for estimating removals are the same as those used to revise the compliance costs.

Sampling data collected during the field sampling program were used to characterize the major waste streams considered for regulation. At each sampled facility, the sampling data were production normalized for each unit operation (i.e., mass of

pollutant generated per mass of product manufactured). This value, referred to as the raw waste, was used to estimate the mass of toxic pollutants generated within the secondary tungsten and cobalt subcategory. The pollutant removal estimates were calculated for each plant by first estimating the total mass of each pollutant in the untreated wastewater. This was calculated by first multiplying the raw waste values by the corresponding production value for that stream and then summing these values for each pollutant for every stream generated by the plant.

Next, the volume of wastewater discharged after the application of each treatment option was estimated for each operation at each plant by comparing the actual discharge to the regulatory flow. The smaller of the two values was selected and summed with the other plant flows. The mass of pollutant discharged was then estimated by multiplying the achievable concentration values attainable with the option (mg/l) by the estimated volume of process wastewater discharged by the subcategory. The mass of pollutant removed is the difference between the estimated mass of pollutant generated within the subcategory and the mass of pollutant discharged after application of the treatment option. The pollutant removal estimates for direct dischargers in the secondary tungsten and cobalt subcategory are presented in Table X-1 (page 3300).

COMPLIANCE COSTS

In estimating subcategory-wide compliance costs, the first step was to develop a cost estimation model, relating the total costs associated with installation and operation of wastewater treatment technologies to plant process wastewater discharge. EPA applied the model to each plant. The plant's investment and operating costs are determined by what treatment it has in place and by its individual process wastewater discharge flow. As discussed above, this flow is either the actual or the BAT regulatory flow, whichever is lesser. The final step was to annualize the capital costs, and to sum the annualized capital costs, and the operating and maintenance costs for each plant, yielding the cost of compliance for the subcategory. These costs were used in assessing economic achievability.

Table X-2 (page 3301) shows a comparison of the costs developed for proposal and the revised costs for promulgation for direct dischargers in the secondary tungsten and cobalt subcategory. A similar comparison of compliance costs for indirect dischargers is presented in Table XII-2 (page 3325).

BAT OPTION SELECTION - PROPOSAL

Our proposed BAT limitations for this subcategory were based on Option C, (BPT technology - chemical precipitation and sedimentation, oil skimming and ammonia steam stripping, plus in-process wastewater reduction, and filtration). Flow reductions were based on 90 percent recycle of scrubber effluent, which is the rate reported by the only existing plant with a scrubber.

Implementation of the proposed BAT limitations would remove annually an estimated 150,700 kg of priority pollutants which is 44 kg greater than proposed BPT. Capital costs for achieving proposed BAT were estimated at $135,150 with annual costs of $442,500.

BAT OPTION SELECTION - PROMULGATION

EPA selected Option C as the basis for promulgating BAT limitations. BAT is based on chemical precipitation, sedimentation and filtration end-of-pipe treatment, along with preliminary treatment consisting of oil-water separation and ammonia steam stripping. This is different from the proposed BAT, since flow reduction is no longer included as part of the treatment train. Following proposal, EPA learned that the two air pollution streams targeted for flow reduction already were operated with greater than 90 percent recycle.

The pollutants specifically limited under BAT are cobalt, copper, nickel, and ammonia. The priority pollutants arsenic, cadmium, chromium, lead, silver, and zinc were also considered for regulation because they were found at treatable concentrations in the raw wastewaters from this subcategory. These pollutants were not selected for specific regulation because they will be effectively controlled when the regulated priority metals are treated to the levels achievable by the model BAT technology.

Implementation of the promulgated BAT limitations will remove annually an estimated 150,700 kg of toxic pollutants, which is 44 kg greater than promulgated BPT. Capital costs for achieving promulgated BAT are estimated at $60,900, with annual costs of $182,700.

AMENDMENT TO THE REGULATION

In response to a petition for review of this regulation and new data supplied by the petitioner, EPA agreed to a settlement agreement to propose to amend this regulation and to take final action on the proposal. EPA agreed to propose to revise the long term average cobalt treatment effectiveness value from 0.03 mg/l to 0.667 mg/l. The 0.03 mg/l value used at promulgation was based on data from the porcelain enameling category. The new long term average is based on data from treatment of cobalt wastewaters and takes into account the higher concentrations of complexed cobalt found in the secondary tungsten and cobalt subcategory. The new long term average treatment effectiveness value results in a one day maximum value of 2.76 mg/l and a monthly average value of 1.21 mg/l. These new values have been used in calculating the limitations for this supplement.

WASTEWATER DISCHARGE RATES

A BAT discharge rate was calculated for each subdivision based upon the flows of the existing plants, as determined from

analysis to the data collection portfolios. The discharge rate is used with the achievable treatment concentrations to determine BAT effluent limitations. Since the discharge rate may be different for each wastewater source, separate production normalized discharge rates for each of the 11 wastewater sources were determined and are summarized in Table X-3 (page 3302). The discharge rates are normalized on a production basis by relating the amount of wastewater generated to the mass of the intermediate product which is produced by the process associated with the waste stream in question. These production normalizing parameters, or PNPs, are also listed in Table X-3.

The BAT discharge rates are equivalent to the BPT discharge rates. Further flow reduction, beyond BPT rates, is not considered achievable in this subcategory.

At proposal subdivisions 5 and 7 were targeted for additional flow reduction beyond that considered for BPT. However, through industry comments on the proposed rulemaking, EPA learned that the one plant operating these two processes currently practices extensive (>90 percent) recycle. Therefore, the BPT flow rates promulgated for subdivisions 5 and 7 include recycle, and it is no longer necessary to include additional flow reduction for these two subdivisions at BAT.

REGULATED POLLUTANT PARAMETERS

In implementing the terms of the Consent Agreement in NRDC v. Train, Op. Cit., and 33 U.S.C. 1314(b)(2)(A and B) (1976), the Agency placed particular emphasis on the priority pollutants. The raw wastewater concentrations from individual operations and the subcategory as a whole were examined to select certain pollutants and pollutant parameters for limitation. This examination and evaluation was presented in Section VI. The Agency, however, has chosen not to regulate all eight priority pollutants selected in this analysis.

The high cost associated with analysis for priority metal pollutants has prompted EPA to develop an alternative method for regulating and monitoring priority pollutant discharges from the nonferrous metals manufacturing category. Rather than developing specific effluent mass limitations and standards for each of the priority metals found in treatable concentrations in the raw wastewater from a given subcategory, the Agency is proposing effluent mass limitations only for those pollutants generated in the greatest quantities as shown by the pollutant removal estimates. The pollutants selected for specific limitation are listed below:

120. copper
124. nickel
ammonia (as N)
cobalt
tungsten

By establishing limitations and standards for certain priority metal pollutants, discharges will attain the same degree of control over priority metal pollutants as they would have been required to achieve had all the priority metal pollutants been directly limited.

This approach is technically justified since the treatment effectiveness concentrations used for chemical precipitation and sedimentation technology are based on optimized treatment for concomitant multiple metals removal. Thus, even though metals have somewhat different theoretical solubilities, they will be removed at very nearly the same rate in a chemical precipitation and sedimentation treatment system operated for multiple metals removal. Filtration as part of the technology basis is likewise justified because this technology removes metals non-preferentially.

The priority metal pollutants selected for specific limitation in the secondary tungsten and cobalt subcategory to control the discharges of toxic metal pollutants are copper and nickel. Ammonia is also selected for limitation since the methods used to control copper and nickel are not effective in the control of ammonia. Cobalt and tungsten are also selected for limitation, as was shown in Section VI. The following priority metal pollutants are excluded from limitation on the basis that they are effectively controlled by the limitations developed for copper and nickel:

115. arsenic
118. cadmium
119. chromium (total)
122. lead
126. silver
128. zinc

EFFLUENT LIMITATIONS

The concentrations achievable by application of BAT are discussed in Section VII of Vol. I and summarized there in Table VII-21 (page 248), with the exception of the cobalt treatment effectiveness value. See Section IX for a discussion of the cobalt treatment effectiveness value. The treatable concentrations both one day maximum and monthly average values are multiplied by the BAT normalized discharge flows summarized in Table X-3 (page 3302) to calculate the mass of pollutants allowed to be discharged per mass of product. The results of these calculations in milligrams of pollutant per kilogram of product represent the BAT effluent limitations and are represented in Table X-4 (page 3303) for each waste stream.

Table X-1

POLLUTANT REMOVAL ESTIMATES FOR DIRECT DISCHARGERS IN THE SECONDARY TUNGSTEN AND COBALT SUBCATEGORY

Pollutant	Total Raw Waste (kg/yr)	Option A Discharge (kg/yr)	Option A Removed (kg/yr)	Option C Discharge (kg/yr)	Option C Removed (kg/yr)
Antimony	61.07	16.97	44.10	7.26	53.81
Arsenic	10.57	9.85	0.72	5.78	4.80
Cadmium	36.70	2.06	34.64	0.91	35.79
Chromium (total)	48.67	2.12	46.54	1.15	47.51
Copper	82,961.17	13.90	82,947.27	5.86	82,955.31
Cyanide (total)	2.27	1.74	0.54	1.54	0.73
Lead	26,287.16	3.51	26,283.65	1.60	26,285.56
Mercury	0.06	0.04	0.02	0.04	0.02
Nickel	25,470.35	19.00	25,451.35	4.40	25,465.95
Selenium	3.76	2.58	1.18	2.12	1.64
Silver	137.75	2.92	134.83	1.40	136.35
Thallium	5.28	3.59	1.69	2.95	2.34
Zinc	15,717.94	8.59	15,709.35	4.13	15,713.81
TOTAL PRIORITY POLLUTANTS	150,742.75	86.86	150,655.89	39.14	150,703.61
Ammonia	187,060	672	186,388	672	186,388
Cobalt	9,457.09	1.46	9,455.64	0.68	9,456.41
TOTAL NONCONVENTIONALS	196,517	673	195,844	673	195,844
TSS	109,061.98	350.53	108,711.45	52.00	109,009.98
Oil and Grease	1,045.28	626.11	419.17	510.28	535.00
TOTAL CONVENTIONALS	110,107.26	976.64	109,130.62	562.27	109,544.98
TOTAL POLLUTANTS	457,367	1,737	455,630	1,274	456,093

Option A - Oil skimming, ammonia steam stripping, chemical precipitation and sedimentation

Option B - Oil skimming, ammonia steam stripping, chemical precipitation, and sedimentation

Option C - Oil skimming, ammonia steam stripping, chemical precipitation, sedimentation, and filtration

TABLE X-2

COST OF COMPLIANCE FOR THE
SECONDARY TUNGSTEN AND COBALT SUBCATEGORY

Direct Dischargers

Option	Total Required Capital Cost (1982 Dollars)	Total Annual Cost (1982 Dollars)
A	42,900	173,000
B	NA	NA
C	60,900	182,700

NA - Not applicable, i.e., Option B eliminated for final regulation.

Table X-3

BAT WASTEWATER DISCHARGE RATES FOR THE SECONDARY TUNGSTEN AND COBALT SUBCATEGORY

Wastewater Stream	BAT Normalized Discharge Rate (l/kkg)	BAT Normalized Discharge Rate (gal/ton)	Production Normalizing Parameter
Tungsten detergent wash and rinse	195	47	tungsten scrap washed
Tungsten leaching acid	2,571	618	tungsten produced
Tungsten post-leaching wash	5,143	1,235	tungsten produced
Synthetic scheelite filtrate	16,661	4,002	synthetic scheelite produced
Tungsten carbide leaching wet air pollution control	1,751	42	tungsten carbide scrap leached
Tungsten carbide wash water	8,333	2,002	tungsten carbide produced
Cobalt sludge leaching wet air pollution control	35,781	860	cobalt produced from cobalt sludge
Crystallization decant	41,650	10,004	cobalt produced
Acid wash decant	19,062	4,579	cobalt produced
Cobalt hydroxide filtrate	56,647	13,607	cobalt produced
Cobalt hydroxide filter cake wash	109,035	26,190	cobalt produced

TABLE X-4

BAT MASS LIMITATIONS FOR THE
SECONDARY TUNGSTEN AND COBALT SUBCATEGORY

(a) Tungsten Detergent Wash and Rinse BAT

Pollutant or pollutant property	Maximum for any one day	Maximum for monthly average
	mg/kg (lb/million lbs) of tungsten scrap washed	
Arsenic	0.271	0.121
Cadmium	0.039	0.016
Chromium	0.072	0.029
*Copper	0.250	0.119
Lead	0.055	0.025
*Nickel	0.107	0.072
Silver	0.057	0.023
Zinc	0.199	0.082
*Ammonia	25.990	11.430
*Cobalt	0.538	0.236
*Tungsten	0.679	0.302

(b) Tungsten Leaching Acid BAT

Pollutant or pollutant property	Maximum for any one day	Maximum for monthly average
	mg/kg (lb/million lbs) of tungsten produced	
Arsenic	3.574	1.594
Cadmium	0.514	0.206
Chromium	0.951	0.386
*Copper	3.291	1.568
Lead	0.720	0.334
*Nickel	1.414	0.951
Silver	0.746	0.309
Zinc	2.622	1.080
*Ammonia	342.700	150.700
*Cobalt	7.096	3.111
*Tungsten	8.947	3.985

*Regulated Pollutant

TABLE X-4 (Continued)

BAT MASS LIMITATIONS FOR THE
SECONDARY TUNGSTEN AND COBALT SUBCATEGORY

(c) Tungsten Post-Leaching Wash BAT

Pollutant or pollutant property	Maximum for any one day	Maximum for monthly average
	mg/kg (lb/million lbs) of tungsten produced	
Arsenic	7.149	3.189
Cadmium	1.029	0.411
Chromium	1.903	0.771
*Copper	6.583	3.137
Lead	1.440	0.669
*Nickel	2.829	1.903
Silver	1.491	0.617
Zinc	5.246	2.160
*Ammonia	685.600	301.400
*Cobalt	14.194	6.223
*Tungsten	17.900	7.972

(d) Synthetic Scheelite Filtrate BAT

Pollutant or pollutant property	Maximum for any one day	Maximum for monthly average
	mg/kg (lb/million lbs) of synthetic scheelite produced	
Arsenic	23.160	10.330
Cadmium	3.332	1.333
Chromium	6.165	2.499
*Copper	21.330	10.160
Lead	4.665	2.166
*Nickel	9.164	6.165
Silver	4.832	1.999
Zinc	16.990	6.998
*Ammonia	2,221.000	976.300
*Cobalt	45.984	20.160
*Tungsten	57.980	25.820

*Regulated Pollutant

TABLE X-4 (Continued)

BAT MASS LIMITATIONS FOR THE
SECONDARY TUNGSTEN AND COBALT SUBCATEGORY

(e) Tungsten Carbide Leaching Wet Air Pollution Control BAT

Pollutant or pollutant property	Maximum for any one day	Maximum for monthly average
mg/kg (lb/million lbs) of tungsten carbide scrap leached		
Arsenic	2.434	1.086
Cadmium	0.350	0.140
Chromium	0.648	0.263
*Copper	2.241	1.068
Lead	0.490	0.228
*Nickel	0.963	0.648
Silver	0.508	0.210
Zinc	1.786	0.735
*Ammonia	233.400	102.600
*Cobalt	4.833	2.119
*Tungsten	6.093	2.714

(f) Tungsten Carbide Wash Water BAT

Pollutant or pollutant property	Maximum for any one day	Maximum for monthly average
mg/kg (lb/million lbs) of tungsten carbide produced		
Arsenic	11.580	5.166
Cadmium	1.667	0.667
Chromium	3.083	1.250
*Copper	10.670	5.083
Lead	2.333	1.083
*Nickel	4.583	3.083
Silver	2.417	1.000
Zinc	8.500	3.500
*Ammonia	1,111.000	488.300
*Cobalt	22.999	10.083
*Tungsten	29.000	12.920

*Regulated Pollutant

TABLE X-4 (Continued)

BAT MASS LIMITATIONS FOR THE
SECONDARY TUNGSTEN AND COBALT SUBCATEGORY

(g) Cobalt Sludge Leaching Wet Air Pollution Control BAT

Pollutant or pollutant property	Maximum for any one day	Maximum for monthly average
mg/kg (lb/million lbs) of cobalt produced from cobalt sludge		
Arsenic	49.740	22.180
Cadmium	7.156	2.862
Chromium	13.240	5.367
*Copper	45.800	21.830
Lead	10.020	4.652
*Nickel	19.680	13.240
Silver	10.380	4.294
Zinc	36.500	15.030
*Ammonia	4,770.000	2,097.000
*Cobalt	98.756	43.295
*Tungsten	124.500	55.460

(h) Crystallization Decant BAT

Pollutant or pollutant property	Maximum for any one day	Maximum for monthly average
mg/kg (lb/million lbs) of cobalt produced		
Arsenic	57.890	25.820
Cadmium	8.330	3.332
Chromium	15.410	6.248
*Copper	53.310	25.410
Lead	11.660	5.415
*Nickel	22.910	15.410
Silver	12.080	4.998
Zinc	42.480	17.490
*Ammonia	5,552.000	2,441.000
*Cobalt	114.954	50.397
*Tungsten	144.900	64.560

*Regulated Pollutant

TABLE X-4 (Continued)

BAT MASS LIMITATIONS FOR THE
SECONDARY TUNGSTEN AND COBALT SUBCATEGORY

(i) Acid Wash Decant BAT

Pollutant or pollutant property	Maximum for any one day	Maximum for monthly average
	mg/kg (lb/million lbs) of cobalt produced	
Arsenic	26.500	11.820
Cadmium	3.812	1.525
Chromium	7.053	2.859
*Copper	24.400	11.630
Lead	5.337	2 478
*Nickel	10.480	7.053
Silver	5.528	2.287
Zinc	19.440	8.006
*Ammonia	2,541.000	1,117.000
*Cobalt	52.611	23.065
*Tungsten	66.340	29.550

(j) Cobalt Hydroxide Filtrate BAT

Pollutant or pollutant property	Maximum for any one day	Maximum for monthly average
	mg/kg (lb/million lbs) of cobalt produced	
Arsenic	78.740	35.120
Cadmium	11.330	4.532
Chromium	20.960	8.497
*Copper	72.510	34.550
Lead	15.860	7.364
*Nickel	31.160	20.960
Silver	16.430	6.798
Zinc	57.780	23.790
*Ammonia	7,551.000	3,320.000
*Cobalt	156.346	68.543
*Tungsten	197.100	87.800

*Regulated Pollutant

TABLE X-4 (Continued)

BAT MASS LIMITATIONS FOR THE
SECONDARY TUNGSTEN AND COBALT SUBCATEGORY

(k) Cobalt Hydroxide Filter Cake Wash

Pollutant or pollutant property	Maximum for any one day	Maximum for monthly average
	mg/kg (lb/million lbs) of cobalt produced	
Arsenic	151.600	67.600
Cadmium	21.810	8.723
Chromium	40.340	16.360
*Copper	139.600	66 510
Lead	30.530	14.170
*Nickel	59.970	40.340
Silver	31.620	13.080
Zinc	111.200	45.790
*Ammonia	14,530.000	6,389.000
*Cobalt	300.094	131.932
*Tungsten	379.400	169.000

*Regulated Pollutant

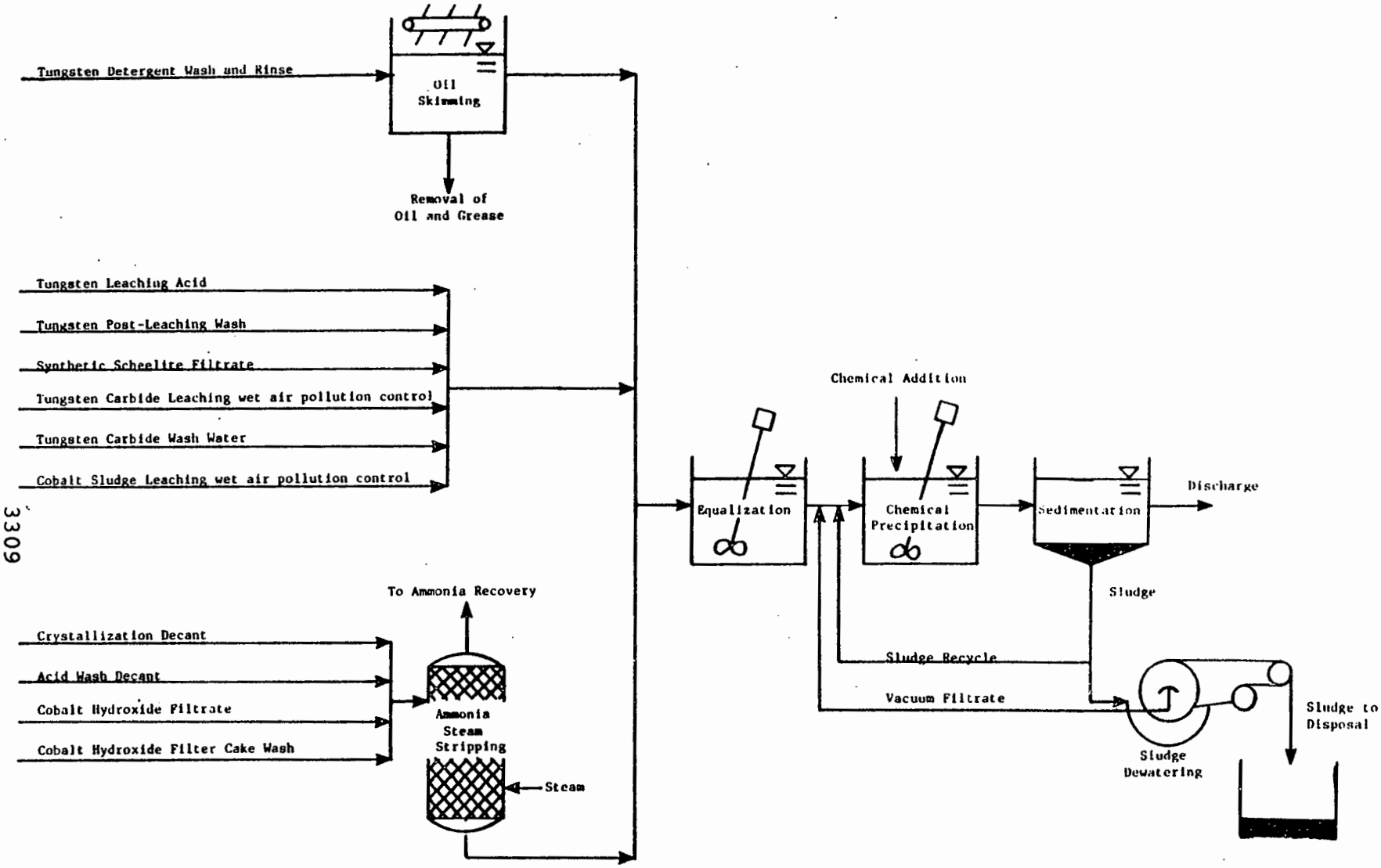

Figure X-1

BAT TREATMENT SCHEME FOR OPTION A

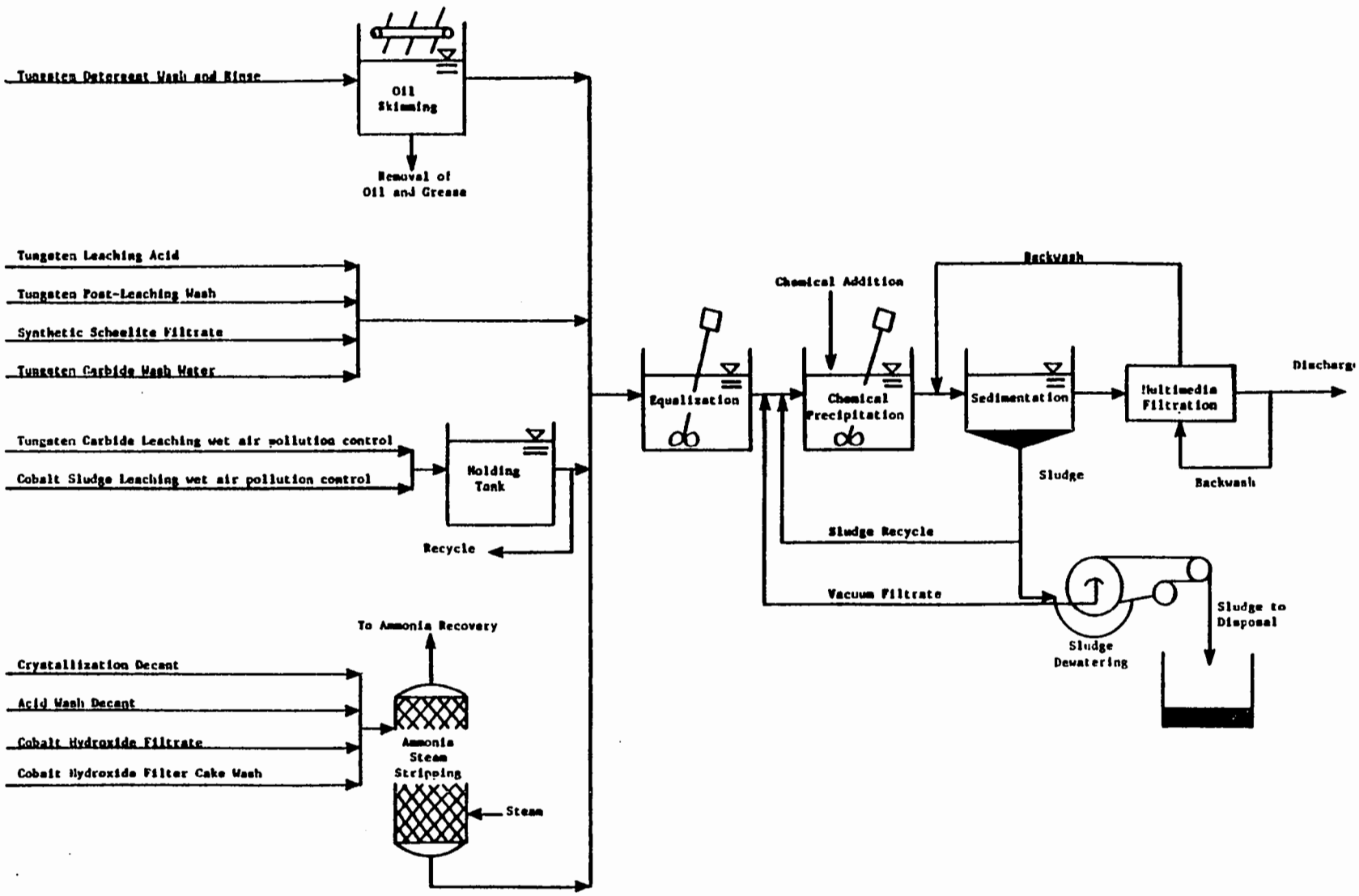

Figure X- 2

BAT TREATMENT SCHEME FOR OPTION C

SECTION XI

NEW SOURCE PERFORMANCE STANDARDS

This section describes the technologies for treatment of wastewater from new sources and presents mass discharge standards for regulated pollutants for NSPS in the secondary tungsten and cobalt subcategory, based on the selected treatment technology. New plants have the opportunity to design the best and most efficient production processes and wastewater treatment technologies without facing the added costs and restrictions encountered in retrofitting an existing plant. Therefore, BAT considers the best demonstrated process changes, in-plant controls, and end-of-pipe treatment technologies which reduce pollution to the maximum extent feasible.

TECHNICAL APPROACH TO NSPS

New source performance standards are equivalent to the best available technology (BAT) selected for currently existing secondary tungsten and cobalt plants. This result is a consequence of careful review by the Agency of a wide range of technical options for new source treatment systems which is discussed in Section XI of Vol. I. Additionally, there was nothing found to indicate that the wastewater flows and characteristics of new plants would not be similar to those from existing plants, since the processes used by new sources are not expected to differ from those used at existing sources. Consequently, BAT production normalized discharge rates, which are based on the best existing practices of the subcategory, can also be applied to new sources. These rates are presented in Table XI-1 (page 3313).

Treatment technologies considered for the NSPS options are identical to the treatment technologies considered for the BAT options. These options are:

OPTION A

- o Preliminary treatment with oil skimming (where required)
- o Preliminary treatment with ammonia steam stripping (where required)
- o Chemical precipitation and sedimentation

OPTION C

- o Preliminary treatment with oil skimming (where required)
- o Preliminary treatment with ammonia steam stripping (where required)
- o Chemical precipitation and sedimentation
- o Multimedia filtration

NSPS OPTION SELECTION

We have proposed and are promulgating that NSPS be equal to BAT. We do not believe that new plants could achieve any flow reduction beyond the allowances promulgated for BAT. Because NSPS is equal to BAT we believe that the proposed and promulgated NSPS will not pose a barrier to the entry of new plants into this subcategory. Promulgated NSPS are equivalent to promulgated BAT.

At proposal, subdivisions 5 and 7 were targeted for additional flow reduction beyond that considered for BPT. However, through industry comments on the proposed rulemaking, EPA learned that the one plant operating these two processes currently practices extensive (>90 percent) recycle. Therefore, the BPT flow rates promulgate for subdivisions 5 and 7 include recycle, and it is no longer necessary to include additional flow reduction for these two subdivisions at BAT or NSPS.

REGULATED POLLUTANT PARAMETERS

The Agency has no reason to believe that the pollutants that will be found in treatable concentrations in processes within new sources will be any different than with existing sources. Accordingly, pollutants and pollutant parameters selected for limitation under NSPS, in accordance with the rationale of Sections VI and X, are identical to those selected for BAT. The conventional pollutant parameters oil and grease, TSS, and pH are also selected for limitation.

NEW SOURCE PERFORMANCE STANDARDS

The NSPS discharge flows for each wastewater source are the same as the discharge rates for BAT and are shown in Table XI-1 (page 3313). The mass of pollutant allowed to be discharged per mass of product is calculated by multiplying the appropriate treatable concentration (mg/l) by the production normalized wastewater discharge flows (l/kkg). The treatable concentrations are listed in Table VII-21 (page 248) of Vol. I, with the exception of the cobalt treatment effectiveness values. See Section IX of this supplement for a discussion of cobalt treatment effectiveness values. The results of these calculations are the production-based new source performance standards. These standards are presented in Table XI-2 (page 3314).

Table XI-1

NSPS WASTEWATER DISCHARGE RATES FOR THE SECONDARY TUNGSTEN AND COBALT SUBCATEGORY

Wastewater Stream	NSPS Normalized Discharge Rate (l/kkg)	NSPS Normalized Discharge Rate (gal/ton)	Production Normalizing Parameter
Tungsten detergent wash and rinse	195	47	tungsten scrap washed
Tungsten leaching acid	2,571	618	tungsten produced
Tungsten post-leaching wash	5,143	1,235	tungsten produced
Synthetic scheelite filtrate	16,661	4,002	synthetic scheelite produced
Tungsten carbide leaching wet air pollution control	1,751	42	tungsten carbide scrap leached
Tungsten carbide wash water	8,333	2,002	tungsten carbide produced
Cobalt sludge leaching wet air pollution control	35,781	860	cobalt produced from cobalt sludge
Crystallization decant	41,650	10,004	cobalt produced
Acid wash decant	19,062	4,579	cobalt produced
Cobalt hydroxide filtrate	56,647	13,607	cobalt produced
Cobalt hydroxide filter cake wash	109,035	26,190	cobalt produced

TABLE XI-2

NSPS FOR THE SECONDARY TUNGSTEN AND COBALT SUBCATEGORY

(a) Tungsten Detergent Wash and Rinse NSPS

Pollutant or pollutant property	Maximum for any one day	Maximum for monthly average
	mg/kg (lb/million lbs) of tungsten scrap washed	
Arsenic	0.271	0.121
Cadmium	0.039	0.016
Chromium	0.072	0.029
*Copper	0.250	0.119
Lead	0.055	0.025
*Nickel	0.107	0.072
Silver	0.057	0.023
Zinc	0.199	0.082
*Ammonia	25.990	11.430
*Cobalt	0.538	0.236
*Tungsten	0.679	0.302
*Oil and Grease	1.950	1.950
*TSS	2.925	2.340
*pH Within the range of 7.5 to 10.0 at all times		

(b) Tungsten Leaching Acid NSPS

Pollutant or pollutant property	Maximum for any one day	Maximum for monthly average
	mg/kg (lb/million lbs) of tungsten produced	
Arsenic	3.574	1.594
Cadmium	0.514	0.206
Chromium	0.951	0.386
*Copper	3.291	1.568
Lead	0.720	0.334
*Nickel	1.414	0.951
Silver	0.746	0.309
Zinc	2.622	1.080
*Ammonia	342.700	150.700
*Cobalt	7.096	3.111
*Tungsten	8.947	3.985
*Oil and Grease	25.710	25.710
*TSS	38.570	30.850
*pH Within the range of 7.5 to 10.0 at all times		

*Regulated Pollutant

TABLE XI-2 (Continued)

NSPS FOR THE SECONDARY TUNGSTEN AND COBALT SUBCATEGORY

(c) Tungsten Post-Leaching Wash NSPS

Pollutant or pollutant property	Maximum for any one day	Maximum for monthly average
	mg/kg (lb/million lbs) of tungsten produced	
Arsenic	7.149	3.189
Cadmium	1.029	0.411
Chromium	1.903	0.771
*Copper	6.583	3.137
Lead	1.440	0.669
*Nickel	2.829	1.903
Silver	1.491	0.617
Zinc	5.246	2.160
*Ammonia	685.600	301.400
*Cobalt	14.194	6.223
*Tungsten	17.900	7.972
*Oil and Grease	51.430	51.430
*TSS	77.150	61.720
*pH Within the range of 7.5 to 10.0 at all times		

(d) Synthetic Scheelite Filtrate NSPS

Pollutant or pollutant property	Maximum for any one day	Maximum for monthly average
	mg/kg (lb/million lbs) of synthetic scheelite produced	
Arsenic	23.160	10.330
Cadmium	3.332	1.333
Chromium	6.165	2.499
*Copper	21.330	10.160
Lead	4.665	2.166
*Nickel	9.164	6.165
Silver	4.832	1.999
Zinc	16.990	6.998
*Ammonia	2,221.000	976.300
*Cobalt	45.984	20.160
*Tungsten	57.980	25.820
*Oil and Grease	166.600	166.600
*TSS	249.900	199.900
*pH Within the range of 7.5 to 10.0 at all times		

*Regulated Pollutant

TABLE XI-2 (Continued)

NSPS FOR THE SECONDARY TUNGSTEN AND COBALT SUBCATEGORY

(e) Tungsten Carbide Leaching Wet Air Pollution Control NSPS

Pollutant or pollutant property	Maximum for any one day	Maximum for monthly average
mg/kg (lb/million lbs) of tungsten carbide scrap leached		
Arsenic	2.434	1.086
Cadmium	0.350	0.140
Chromium	0.648	0.263
*Copper	2.241	1.068
Lead	0.490	0.228
*Nickel	0.963	0.648
Silver	0.508	0.210
Zinc	1.786	0.735
*Ammonia	233.400	102.600
*Cobalt	4.833	2.119
*Tungsten	6.093	2.714
*Oil and Grease	17.510	17.510
*TSS	26.270	21.010
*pH Within the range of 7.5 to 10.0 at all times		

(f) Tungsten Carbide Wash Water NSPS

Pollutant or pollutant property	Maximum for any one day	Maximum for monthly average
mg/kg (lb/million lbs) of tungsten carbide produced		
Arsenic	11.580	5.166
Cadmium	1.667	.667
Chromium	3.083	1.250
*Copper	10.670	5.083
Lead	2.333	1.083
*Nickel	4.583	3.083
Silver	2.417	1.000
Zinc	8.500	3.500
*Ammonia	1,111.000	488.300
*Cobalt	22.999	10.083
*Tungsten	29.000	12.920
*Oil and Grease	83.330	83.330
*TSS	125.000	100.000
*pH Within the range of 7.5 to 10.0 at all times		

*Regulated Pollutant

TABLE XI-2 (Continued)

NSPS FOR THE SECONDARY TUNGSTEN AND COBALT SUBCATEGORY

(g) Cobalt Sludge Leaching Wet Air Pollution Control NSPS

Pollutant or Pollutant property	Maximum for any one day	Maximum for monthly average
mg/kg (lb/million lbs) of cobalt produced from cobalt sludge		
Arsenic	49.740	22.180
Cadmium	7.156	2.862
Chromium	13.240	5.367
*Copper	45.800	21.830
Lead	10.020	4.652
*Nickel	19.680	13.240
Silver	10.380	4.294
Zinc	36.500	15.030
*Ammonia	4,770.000	2,097.000
*Cobalt	98.756	43.295
*Tungsten	124.500	55.460
*Oil and Grease	357.800	357.800
*TSS	536.700	429.400
*pH Within the range of 7.5 to 10.0 at all times		

(h) Crystallization Decant NSPS

Pollutant or pollutant property	Maximum for any one day	Maximum for monthly average
mg/kg (lb/million lbs) of cobalt produced		
Arsenic	57.890	25.820
Cadmium	8.330	3.332
Chromium	15.410	6.248
*Copper	53.310	25.410
Lead	11.660	5.415
*Nickel	22.910	15.410
Silver	12.080	4.998
Zinc	42.480	17.490
*Ammonia	5,552.000	2,441.000
*Cobalt	114.954	50.397
*Tungsten	144.900	64.560
*Oil and Grease	416.500	416.500
*TSS	624.800	499.800
*pH Within the range of 7.5 to 10.0 at all times		

*Regulated Pollutant

TABLE XI-2 (Continued)

NSPS FOR THE SECONDARY TUNGSTEN AND COBALT SUBCATEGORY

(i) Acid Wash Decant NSPS

Pollutant or pollutant property	Maximum for any one day	Maximum for monthly average
	mg/kg (lb/million lbs) of cobalt produced	
Arsenic	26.500	11.820
Cadmium	3.812	1.525
Chromium	7.053	2.859
*Copper	24.400	11.630
Lead	5.337	2.478
*Nickel	10.480	7.053
Silver	5.528	2.287
Zinc	19.440	8.006
*Ammonia	2,541.000	1,117.000
*Cobalt	52.611	23.065
*Tungsten	66.340	29.550
*Oil and Grease	190.600	190.600
*TSS	285.900	228.700
*pH Within the range of 7.5 to 10.0 at all times		

(j) Cobalt Hydroxide Filtrate NSPS

Pollutant or pollutant property	Maximum for any one day	Maximum for monthly average
	mg/kg (lb/million lbs) of cobalt produced	
Arsenic	78.740	35.120
Cadmium	11.330	4.532
Chromium	20.960	8.497
*Copper	72.510	34.550
Lead	15.860	7.364
*Nickel	31.160	20.960
Silver	16.430	6.798
Zinc	57.780	23.790
*Ammonia	7,551.000	3,320.000
*Cobalt	156.346	68.543
*Tungsten	197.100	87.800
*Oil and Grease	566.500	566.500
*TSS	849.700	679.800
*pH Within the range of 7.5 to 10.0 at all times		

*Regulated Pollutant

TABLE XI-2 (Continued)

NSPS FOR THE SECONDARY TUNGSTEN AND COBALT SUBCATEGORY

(k) Cobalt Hydroxide Filter Cake Wash NSPS

Pollutant or pollutant property	Maximum for any one day	Maximum for monthly average
	mg/kg (lb/million lbs) of cobalt produced	
Arsenic	151.600	67.600
Cadmium	21.810	8.723
Chromium	40.340	16.360
*Copper	139.600	66.510
Lead	30.530	14.170
*Nickel	59.970	40.340
Silver	31.620	13.080
Zinc	111.200	45.790
*Ammonia	14,530.000	6,389.000
*Cobalt	300.094	131.932
*Tungsten	379.400	169.000
*Oil and Grease	1,090.000	1,090.000
*TSS	1,636.000	1,308.000
*pH	Within the range of. 7.5 to 10.0 at all times	

*Regulated Pollutant

THIS PAGE INTENTIONALLY LEFT BLANK

SECTION XII

PRETREATMENT STANDARDS

This section describes the control and treatment technologies for pretreatment of process wastewaters in the secondary tungsten and cobalt subcategory. Pretreatment standards for regulated pollutants are presented based on the selected control and treatment technology.

TECHNICAL APPROACH TO PRETREATMENT

Before promulgating pretreatment standards, the Agency examines whether the pollutants discharged by the industry pass through the POTW or interfere with the POTW operation or its chosen sludge disposal practices. In determining whether pollutants pass through a well-operated POTW achieving secondary treatment, the Agency compares the percentage of a pollutant removed by POTW with the percentage removed by direct dischargers applying the best available technology economically achievable. A pollutant is deemed to pass through the POTW when the average percentage removed nationwide by well-operated POTW meeting secondary treatment requirements is less than the percentage removed by direct dischargers complying with BAT effluent limitations guidelines for that pollutant.

This definition of pass through satisfies two competing objectives set by Congress: (1) that standards for indirect dischargers be equivalent to standards for direct dischargers while at the same time, (2) that the treatment capability and performance of the POTW be recognized and taken into account in regulating the discharge of pollutants from indirect dischargers.

The Agency compares percentage removal rather than the mass or concentration of pollutants discharged because the latter would not take into account the mass of pollutants discharged to the POTW from non-industrial sources or the dilution of the pollutants in the POTW effluent to lower concentrations due to the addition of large amounts of non-industrial wastewater.

PRETREATMENT STANDARDS FOR NEW SOURCES

Options for pretreatment of wastewaters from new sources are based on increasing the effectiveness of end-of-pipe treatment technologies. All in-plant changes and applicable end-of-pipe treatment processes have been discussed previously in Sections X and XI. The options for PSNS are the same as the BAT and NSPS options discussed in Sections X and XI, respectively.

A description of each option is presented in Section X, while a more detailed discussion, including pollutants controlled by each treatment process is presented in Section VII of the General Development Document.

Treatment technologies considered for the PSNS options are:

OPTION A

- o Preliminary treatment with ammonia steam stripping (where required)
- o Preliminary treatment with oil skimming (where required)
- o Chemical precipitation and sedimentation

OPTION C

- o Preliminary treatment with ammonia steam stripping (where required)
- o Preliminary treatment with oil skimming (where required)
- o Chemical precipitation and sedimentation
- o Multimedia filtration

PSES AND PSNS OPTION SELECTION

We are promulgating PSES and PSNS equal to NSPS and BAT (Option C) for this subcategory. It is necessary to promulgate PSES and PSNS to prevent pass-through of copper, nickel, cobalt, and ammonia. These toxic pollutants are removed by a well-operated POTW achieving secondary treatment at an average of 26 percent, while the NSPS and BAT level technology removes approximately 97 percent.

The technology basis for PSES and PSNS thus is chemical precipitation and sedimentation, oil skimming, ammonia steam stripPing, and filtration. The achievable concentration for ammonia steam stripping is based on iron and steel manufacturing category data, as explained in the discussion of BPT for this subcategory. The PSES and PSNS discharge rates are shown in Table XII-1 (page 3324).

Capital cost for achieving PSES is estimated as $16,300, with annual costs of $8,800. These costs are not considered prohibitive. Costs for indirect dischargers are shown in Table XII-2 (page 3325).

We believe that the promulgated PSNS are achievable, and that they are not a barrier to entry of new plants into this subcategory.

REGULATED POLLUTANT PARAMETERS

Pollutants selected for limitation, in accordance with the rationale of Sections VI and X, are identical to those selected for limitation for BAT. It is necessary to promulgate PSES and PSNS to prevent the pass-through of copper, nickel, ammonia, cobalt, and tungsten.

PRETREATMENT STANDARDS

Pretreatment standards are based on the treatable concentrations from the selected treatment technology, (Option C). and the discharge rates determined in Sections X and XI for BAT and NSPS, respectively. A mass of pollutant per mass of production (mg/kg) allocation is given for each subdivision within the subcategory. This pollutant allocation is based on the product of the treatable concentration from the proposed treatment (mg/l) and the production normalized wastewater discharge rate (l/kkg). The achievable treatment concentrations for BAT are identical to those for PSES and PSNS. These concentrations are listed in Table VII-21 (page 248) of Vol. I, with the exception of the cobalt treatment effectiveness value. See Section IX for a discussion of the cobalt treatment effectiveness value. PSES and PSNS are presented in Tables XII-3 and XII-4 (pages 3326 and 3332), respectively.

Table XII-1

PSES AND PSNS WASTEWATER DISCHARGE RATES FOR THE SECONDARY TUNGSTEN AND COBALT SUBCATEGORY

Wastewater Stream	PSNS Normalized Discharge Rate (l/kkg)	PSNS Normalized Discharge Rate (gal/ton)	Production Normalizing Parameter
Tungsten detergent wash and rinse	195	47	tungsten scrap washed
Tungsten leaching acid	2,571	618	tungsten produced
Tungsten post-leaching wash	5,143	1,235	tungsten produced
Synthetic scheelite filtrate	16,661	4,002	synthetic scheelite produced
Tungsten carbide leaching wet air pollution control	1,751	42	tungsten carbide scrap leached
Tungsten carbide wash water	8,333	2,002	tungsten carbide produced
Cobalt sludge leaching wet air pollution control	35,781	860	cobalt produced from cobalt sludge
Crystallization decant	41,650	10,004	cobalt produced
Acid wash decant	19,062	4,579	cobalt produced
Cobalt hydroxide filtrate	56,647	13,607	cobalt produced
Cobalt hydroxide filter cake wash	109,035	26,190	cobalt produced

TABLE XII-2

COST OF COMPLIANCE FOR THE
SECONDARY TUNGSTEN AND COBALT SUBCATEGORY

Indirect Dischargers

Option	Total Required Capital Cost (1982 Dollars)	Total Annual Cost (1982 Dollars)
A	8,500	5,300
C	16,300	8,800

TABLE XII-3

PSES FOR THE SECONDARY TUNGSTEN AND COBALT SUBCATEGORY

(a) Tungsten Detergent Wash and Rinse PSES

Pollutant or pollutant property	Maximum for any one day	Maximum for monthly average
	mg/kg (lb/million lbs) of tungsten scrap washed	
Arsenic	0.271	0.121
Cadmium	0.039	0.016
Chromium	0.072	0.029
*Copper	0.250	0.119
Lead	0.055	0.025
*Nickel	0.107	0.072
Silver	0.057	0.023
Zinc	0.199	0.082
*Ammonia	25.990	11.430
*Cobalt	0.538	0.236
*Tungsten	0.679	0.302

(b) Tungsten Leaching Acid PSES

Pollutant or pollutant property	Maximum for any one day	Maximum for monthly average
	mg/kg (lb/million lbs) of tungsten produced	
Arsenic	3.574	1.594
Cadmium	0.514	0.206
Chromium	0.951	0.386
*Copper	3.291	1.568
Lead	0.720	0.334
*Nickel	1.414	0.951
Silver	0.746	0.309
Zinc	2.622	1.080
*Ammonia	342.700	150.700
*Cobalt	7.096	3.111
*Tungsten	8.947	3.985

*Regulated Pollutant

TABLE XII-3 (Continued)

PSES FOR THE SECONDARY TUNGSTEN AND COBALT SUBCATEGORY

(c) Tungsten Post-Leaching Wash PSES

Pollutant or pollutant property	Maximum for any one day	Maximum for monthly average
	mg/kg (lb/million lbs) of tungsten produced	
Arsenic	7.149	3.189
Cadmium	1.029	0.411
Chromium	1.903	0.771
*Copper	6.583	3.137
Lead	1.440	0.669
*Nickel	2.829	1.903
Silver	1.491	0.617
Zinc	5.246	2.160
*Ammonia	685.600	301.400
*Cobalt	14.194	6.223
*Tungsten	17.900	7.972

(d) Synthetic Scheelite Filtrate PSES

Pollutant or pollutant property	Maximum for any one day	Maximum for monthly average
	mg/kg (lb/million lbs) of synthetic scheelite produced	
Arsenic	23.160	10.330
Cadmium	3.332	1.333
Chromium	6.165	2.499
*Copper	21.330	10.160
Lead	4.665	2.166
*Nickel	9.164	6.165
Silver	4.832	1.999
Zinc	16.990	6.998
*Ammonia	2,221.000	976.300
*Cobalt	45.984	20.160
*Tungsten	57.980	25.820

*Regulated Pollutant

TABLE XII-3 (Continued)

PSES FOR THE SECONDARY TUNGSTEN AND COBALT SUBCATEGORY

(e) Tungsten Carbide Leaching Wet Air Pollution Control PSES

Pollutant or pollutant property	Maximum for any one day	Maximum for monthly average
mg/kg (lb/million lbs) of tungsten carbide scrap leached		
Arsenic	2.434	1.086
Cadmium	0.350	0.140
Chromium	0.648	0.263
*Copper	2.241	1.068
Lead	0.490	0.228
*Nickel	0.963	0.648
Silver	0.508	0.210
Zinc	1.786	0.735
*Ammonia	233.400	102.600
*Cobalt	4.833	2.119
*Tungsten	6.093	2.714

(f) Tungsten Carbide Wash Water PSES

Pollutant or pollutant property	Maximum for any one day	Maximum for monthly average
mg/kg (lb/million lbs) of tungsten carbide produced		
Arsenic	11.580	5.166
Cadmium	1.667	0.667
Chromium	3.083	1.250
*Copper	10.670	5.083
Lead	2.333	1.083
*Nickel	4.583	3.083
Silver	2.417	1.000
Zinc	8.500	3.500
*Ammonia	1,111.000	488.300
*Cobalt	22.999	10.083
*Tungsten	29.000	12.920

*Regulated Pollutant

TABLE XII-3 (Continued)

PSES FOR THE SECONDARY TUNGSTEN AND COBALT SUBCATEGORY

(g) Cobalt Sludge Leaching Wet Air Pollution Control PSES

Pollutant or pollutant property	Maximum for any one day	Maximum for monthly average
mg/kg (lb/million lbs) of cobalt produced from cobalt sludge		
Arsenic	49.740	22.180
Cadmium	7.156	2.862
Chromium	13.240	5.367
*Copper	45.800	21.830
Lead	10.020	4.652
*Nickel	19.680	13.240
Silver	10.380	4.294
Zinc	36.500	15.030
*Ammonia	4,770.000	2,097.000
*Cobalt	98.756	43.295
*Tungsten	124.500	55.460

(h) Crystallization Decant PSES

Pollutant or pollutant property	Maximum for any one day	Maximum for monthly average
mg/kg (lb/million lbs) of cobalt produced		
Arsenic	57.890	25.820
Cadmium	8.330	3.332
Chromium	15.410	6.248
*Copper	53.310	25.410
Lead	11.660	5.415
*Nickel	22.910	15.410
Silver	12.080	4.998
Zinc	42.480	17.490
*Ammonia	5,552.000	2,441.000
*Cobalt	114.954	50.397
*Tungsten	144.900	64.560

*Regulated Pollutant

Table XII-3 (Continued)

PSES FOR THE SECONDARY TUNGSTEN AND COBALT SUBCATEGORY

(i) Acid Wash Decant PSES

Pollutant or pollutant property	Maximum for any one day	Maximum for monthly average
	mg/kg (lb/million lbs) of cobalt produced	
Arsenic	26.500	11.820
Cadmium	3.812	1.525
Chromium	7.053	2.859
*Copper	24.400	11 630
Lead	5.337	2.478
*Nickel	10.480	7.053
Silver	5.528	2.287
Zinc	19.440	8.006
*Ammonia	2,541.000	1,117.000
*Cobalt	52.611	23.065
*Tungsten	66.340	29.550

(j) Cobalt Hydroxide Filtrate PSES

Pollutant or pollutant property	Maximum for any one day	Maximum for monthly average
	mg/kg (lb/million lbs) of cobalt produced	
Arsenic	78.740	35.120
Cadmium	11.330	4.532
Chromium	20.960	8.497
*Copper	72.510	34.550
Lead	15.860	7.364
*Nickel	31.160	20.960
Silver	16.430	6.798
Zinc	57.780	23.790
*Ammonia	7,551.000	3,320.000
*Cobalt	156.346	68.543
*Tungsten	197.100	87.800

*Regulated Pollutant

Table XII-3 (Continued)

PSES FOR THE SECONDARY TUNGSTEN AND COBALT SUBCATEGORY

PSES
Secondary Tungsten and Cobalt
(k) Cobalt Hydroxide Filter Cake Wash PSES

Pollutant or pollutant property	Maximum for any one day	Maximum for monthly average
	mg/kg (lb/million lbs) of cobalt produced	
Arsenic	151.600	67.600
Cadmium	21.810	8.723
Chromium	40.340	16.360
*Copper	139.600	66.510
Lead	30.530	14.170
*Nickel	59.970	40.340
Silver	31.620	13.080
Zinc	111.200	45.790
*Ammonia	14,530.000	6,389.000
*Cobalt	300.094	131.932
*Tungsten	379.400	169.000

*Regulated Pollutant

TABLE XII-4

PSNS FOR THE SECONDARY TUNGSTEN AND COBALT SUBCATEGORY

(a) Tungsten Detergent Wash and Rinse PSNS

Pollutant or pollutant property	Maximum for any one day	Maximum for monthly average
	mg/kg (lb/million lbs) of tungsten scrap washed	
Arsenic	0.271	0.121
Cadmium	0.039	0.016
Chromium	0.072	0.029
*Copper	0.250	0.119
Lead	0.055	0.025
*Nickel	0.107	0.072
Silver	0.057	0.023
Zinc	0.199	0.082
*Ammonia	25.990	11.430
*Cobalt	0.538	0.236
*Tungsten	0.679	0.302

(b) Tungsten Leaching Acid PSNS

Pollutant or pollutant property	Maximum for any one day	Maximum for monthly average
	mg/kg (lb/million lbs) of tungsten produced	
Arsenic	3.574	1.594
Cadmium	0.514	0.206
Chromium	0.951	0.386
*Copper	3.291	1.568
Lead	0.720	0.334
*Nickel	1.414	0.951
Silver	0.746	0.309
Zinc	2.622	1.080
*Ammonia	342.700	150.700
*Cobalt	7.096	3.111
*Tungsten	8.947	3.985

*Regulated Pollutant

Table XII-4 (Continued)

PSNS FOR THE SECONDARY TUNGSTEN AND COBALT SUBCATEGORY

(c) Tungsten Post-Leaching Wash PSNS

Pollutant or pollutant property	Maximum for any one day	Maximum for monthly average
	mg/kg (lb/million lbs) of tungsten produced	
Arsenic	7.149	0.189
Cadmium	1.029	0.411
Chromium	1.903	0.771
*Copper	6.583	3.137
Lead	1.440	0.669
*Nickel	2.829	1.903
Silver	1.491	0.617
Zinc	5.246	2.160
*Ammonia	685.600	301.400
*Cobalt	14.194	6.223
*Tungsten	17.900	7.972

(d) Synthetic Scheelite Filtrate PSNS

Pollutant or pollutant property	Maximum for any one day	Maximum for monthly average
	mg/kg (lb/million lbs) of synthetic scheelite produced	
Arsenic	23.160	10.330
Cadmium	3.332	1.333
Chromium	6.165	2.499
*Copper	21.330	10.160
Lead	4.665	2.166
*Nickel	9.164	6.165
Silver	4.832	1.999
Zinc	16.990	6.998
*Ammonia	2,221.000	976.300
*Cobalt	45.984	20.160
*Tungsten	57.980	25.820

*Regulated Pollutant

TABLE XII-4 (Continued)

PSNS FOR THE SECONDARY TUNGSTEN AND COBALT SUBCATEGORY

(e) Tungsten Carbide Leaching Wet Air Pollution Control PSNS

Pollutant or pollutant property	Maximum for any one day	Maximum for monthly average
mg/kg (lb/million lbs) of tungsten carbide scrap leached		
Arsenic	2.434	1.086
Cadmium	0.350	0.140
Chromium	0.648	0.263
*Copper	2.241	1.068
Lead	0.490	0.228
*Nickel	0.963	0.648
Silver	0.508	0.210
Zinc	1.786	0.735
*Ammonia	233.400	102.600
*Cobalt	4.833	2.119
*Tungsten	6.093	2.714

(f) Tungsten Carbide Wash Water PSNS

Pollutant or pollutant property	Maximum for any one day	Maximum for monthly average
mg/kg (lb/million lbs) of tungsten carbide produced		
Arsenic	11.580	5.166
Cadmium	1.667	0.667
Chromium	3.083	1.250
*Copper	10.670	5.083
Lead	2.333	1.083
*Nickel	4.583	3.083
Silver	2.417	1.000
Zinc	8.500	3.500
*Ammonia	1,111.000	488.300
*Cobalt	22.999	10.083
*Tungsten	29.000	12.920

*Regulated Pollutant

TABLE XII-4 (Continued)

PSNS FOR THE SECONDARY TUNGSTEN AND COBALT SUBCATEGORY

(g) Cobalt Sludge Leaching Wet Air Pollution Control PSNS

Pollutant or pollutant property	Maximum for any one day	Maximum for monthly average
mg/kg (lb/million lbs) of cobalt produced from cobalt sludge		
Arsenic	49.740	22.180
Cadmium	7.156	2.862
Chromium	13.240	5.367
*Copper	45.800	21.830
Lead	10.020	4.652
*Nickel	19.680	13.240
Silver	10.380	4.294
Zinc	36.500	15.030
*Ammonia	4,770.000	2,097.000
*Cobalt	98.756	43.295
*Tungsten	124.500	55.460

(h) Crystallization Decant PSNS

Pollutant or pollutant property	Maximum for any one day	Maximum for monthly average
mg/kg (lb/million lbs) of cobalt produced		
Arsenic	57.890	25.820
Cadmium	8.330	3.332
Chromium	15.410	6.248
*Copper	53.310	25.410
Lead	11.660	5.415
*Nickel	22.910	15.410
Silver	12.080	4.998
Zinc	42.480	17.490
*Ammonia	5,552.000	2,441.000
*Cobalt	114.954	50.397
*Tungsten	144.900	64.560

*Regulated Pollutant

TABLE XII-4 (Continued)

PSNS FOR THE SECONDARY TUNGSTEN AND COBALT SUBCATEGORY

(i) Acid Wash Decant PSNS

Pollutant or pollutant property	Maximum for any one day	Maximum for monthly average
	mg/kg (lb/million lbs) of cobalt produced	
Arsenic	26.500	11.820
Cadmium	3.812	1.525
Chromium	7.053	2 859
*Copper	24.400	11.630
Lead	5.337	2.478
*Nickel	10.480	7.053
Silver	5.528	2.287
Zinc	19.440	8.006
*Ammonia	2,541.000	1,117.000
*Cobalt	52.611	23.065
*Tungsten	66.340	29.550

PSNS
Secondary Tungsten and Cobalt
(j) Cobalt Hydroxide Filtrate PSNS

Pollutant or pollutant property	Maximum for any one day	Maximum for monthly average
	mg/kg (lb/million lbs) of cobalt produced	
Arsenic	78.740	35.120
Cadmium	11.330	4.532
Chromium	20.960	8.497
*Copper	72.510	34.550
Lead	15.860	7.364
*Nickel	31.160	20.960
Silver	16.430	6.798
Zinc	57.780	23.790
*Ammonia	7,551.000	3,320.000
*Cobalt	156.346	68.543
*Tungsten	197.100	87.800

*Regulated Pollutant

Table XII-4 (Continued)

PSNS FOR THE SECONDARY TUNGSTEN AND COBALT SUBCATEGORY

(k) Cobalt Hydroxide Filter Cake Wash PSNS

Pollutant or pollutant property	Maximum for any one day	Maximum for monthly average
	mg/kg (lb/million lbs) of cobalt produced	
Arsenic	151.600	67.600
Cadmium	21.810	8.723
Chromium	40.340	16.360
*Copper	139.600	66.510
Lead	30.530	14.170
*Nickel	59.970	40.340
Silver	31.620	13.080
Zinc	111.200	45.790
*Ammonia	14,530.000	6,389.000
*Cobalt	300.094	131.932
*Tungsten	379.400	169.000

*Regulated Pollutant

THIS PAGE INTENTIONALLY LEFT BLANK

SECONDARY TUNGSTEN AND COBALT SUBCATEGORY

SECTION XIII

BEST CONVENTIONAL POLLUTANT CONTROL TECHNOLOGY

EPA is not promulgating best conventional pollutant control technology (BCT) for the secondary tungsten and cobalt subcategory at this time.

THIS PAGE INTENTIONALLY LEFT BLANK

NONFERROUS METALS MANUFACTURING POINT SOURCE CATEGORY

DEVELOPMENT DOCUMENT SUPPLEMENT

for the

Primary Molybdenum and Rhenium Subcategory

William K. Reilly
Administrator

Rebecca Hanmer
Acting Assistant Administrator for Water

Martha Prothro, Director
Office of Water Regulations and Standards

Thomas P. O'Farrell, Director
Industrial Technology Division

Ernst P. Hall, P.E., Chief
Metals Industry Branch
and
Technical Project Officer

May 1989

U.S. Environmental Protection Agency
Office of Water
Office of Water Regulations and Standards
Industrial Technology Division
Washington, D. C. 20460

TABLE OF CONTENTS

Section		Page
I	SUMMARY	3351
II	CONCLUSIONS	3353
III	SUBCATEGORY PROFILE	3363
	Description of Primary Molybdenum and Rhenium Production	3363
	Raw Materials	3363
	Molybdenum Sulfide Roasting	3364
	Production of Pure Molybdic Oxide	3364
	Production of Ammonium Molybdate Compounds	3364
	Reduction to Molybdenum Metal	3364
	Recovery of Rhenium	3364
	Process Wastewater Sources	3365
	Other Wastewater Sources	3365
	Age, Production, and Process Profile	3365
IV	SUBCATEGORIZATION	3372
	Factors Considered in Subdividing the Primary Molybdenum and Rhenium Subcategory	3372
	Other Factors	3373
	Production Normalizing Parameters	3373
V	WATER USE AND WASTEWATER CHARACTERISTICS	3375
	Wastewater Flow Rates	3376
	Wastewater Characterization Data	3377
	Data Collection Portfolios	
	Field Sampling Data	3377
	Wastewater Characteristics and Flows by Subdivision	3379
	Molybdenum Sulfide Leachate	3379
	Roaster SO_2 Scrubber	3379
	Molybdic Oxide Leachate	3380
	Hydrogen Reduction Furnace Scrubber	3381
	Depleted Rhenium Scrubbing Solution	3381

TABLE OF CONTENTS (Continued)

Section		Page
VI	SELECTION OF POLLUTANT PARAMETERS	3417
	Conventional and Nonconventional Pollutant Parameters	3417
	Conventional and Nonconventional Pollutant Parameters Selected	3418
	Toxic Pollutants	3419
	Toxic Pollutants Never Detected	3419
	Toxic Pollutants Never Found Above Their Analytical Quantification Concentration	3419
	Toxic Pollutants Present Below Concentrations Achievable by Treatment	3419
	Toxic Pollutants Detected in a Small Number of Sources	3420
	Toxic Pollutants Selected for Further Consideration in Establishing Limitations and Standards	3420
VII	CONTROL AND TREATMENT TECHNOLOGIES	3429
	Current Control and Treatment Practices	3429
	Molybdenum Sulfide Leachate	3429
	Roaster SO_2 Scrubber	3429
	Molybdic Oxide Leachate	3430
	Hydrogen Reduction Furnace Scrubber	3430
	Depleted Rhenium Scrubbing Solution	3430
	Control and Treatment Options	3431
	Option A	3431
	Option B	3431
	Option C	3431
VIII	COSTS, ENERGY, AND NONWATER QUALITY ASPECTS	3433
	Treatment Options for Existing Sources	3433
	Option A	3433
	Option B	3433
	Option C	3433
	Cost Methodology	3433
	Nonwater Quality Aspects	3434
	Energy Requirements	3434
	Solid Waste	3434
	Air Pollution	3636

TABLE OF CONTENTS (Continued)

Section		Page
IX	BEST PRACTICABLE CONTROL TECHNOLOGY CURRENTLY AVAILABLE	3439
	Technical Approach to BPT	3439
	Industry Cost and Pollutant Removal Estimates	3441
	BPT Option Selection	3441
	Wastewater Discharge Rates	3442
	Molybdenum Sulfide Leachate	3443
	Roaster SO_2 Scrubber	3443
	Molybdic Oxide Leachate	3443
	Hydrogen Reduction Furnace Scrubber	3444
	Depleted Rhenium Scrubbing Solution	3444
	Regulated Pollutant Parameters	3445
	Effluent Limitations	3445
X	BEST AVAILABLE TECHNOLOGY ECONOMICALLY ACHIEVABLE	3451
	Technical Approach to BAT	3451
	Option A	3452
	Option B	3452
	Option C	3453
	Industry Cost and Pollutant Removal Estimates	3453
	Pollutant Removal Estimates	3453
	Compliance Cost	3453
	BAT Option Selection - Proposal	3453
	BAT Option Selection - Promulgation	3454
	Wastewater Discharge Rates	3455
	Hydrogen Reduction Furnace Scrubber	3456
	Regulated Pollutant Parameters	3456
	Effluent Limitations	3457
XI	NEW SOURCE PERFORMANCE STANDARDS	3469
	Technical Approach to NSPS	3469
	NSPS Option Selection - Proposal	3470
	NSPS Option Selection - Promulgation	3470
	Regulated Pollutant Parameters	3470
	New Source Performance Standards	3471

TABLE OF CONTENTS (Continued)

Section		Page
XII	PRETREATMENT STANDARDS	3477
	Technical Approach to Pretreatment	3477
	Pretreatment Standards for New Sources	3478
	PSNS OPTION Selection	3478
	Regulation Pollutant Parameters	3479
	Pretreatment Standards for New Sources	3479
XIII	BEST CONVENTIONAL POLLUTANT CONTROL TECHNOLOGY	3485

LIST OF TABLES

Table	Title	Page
III-1	Initial Operating Year (Range) Summary of Plants in the Primary Molybdenum and Rhenium Subcategory by Discharge Type	3366
III-2	Production Ranges for Primary Molybdenum Plants Molybdenum Production Ranges for 1982	3367
III-3	Production Ranges for Primary Rhenium Plants Rhenium Production Range for 1982	3368
III-4	Summary of Primary Molybdenum and Rhenium Subcategory Processes and Associated Waste Streams	3369
V-1	Water Use and Discharge Rates for Molybdenum Sulfide Leachate	3382
V-2	Water Use and Discharge Rates for Roaster SO_2 Scrubber	3383
V-3	Water Use and Discharge Rates for Molybdic Oxide Leachate	3384
V-4	Water Use and Discharge Rates for Hydrogen Reduction Furnace Scrubber	3385
V-5	Water Use and Discharge Rates for Depleted Rhenium Scrubbing Solution	3386
V-6	Primary Molybdenum and Rhenium Subcategory Acid Plant Blowdown Raw Wastewater Sampling Data	3387
V-7	Primary Molybdenum and Rhenium Subcategory H_2 Reduction Furnace Scrubber Raw Wastewater Sampling Data	3395
V-8	Primary Molybdenum and Rhenium Subcategory Molybdic Oxide Leachate Raw Wastewater Sampling Data	3398
V-9	Primary Molybdenum and Rhenium Subcategory Acid Plant Blowdown After Sulfide Precipitation and Filtration Wastewater Sampling Data	3401
V-10	Primary Molybdenum and Rhenium Subcategory Acid Plant Blowdown Commingled Wastewater Sampling Data	3405

LIST OF TABLES (Continued)

Table	Title	Page
V-11	Primary Molybdenum and Rhenium Subcategory Acid Plant Blowdown Treated Wastewater Sampling Data	3409
V-12	Primary Molybdenum and Rhenium Subcategory Molybdic Oxide Leachate Raw Wastewater Self Sampling Data	3413
VI-1	Frequency of Occurrence of Priority Pollutants Primary Molybdenum and Rhenium Subcategory Raw Wastewater	3422
VIII-1	Cost of Compliance for the Primary Molybdenum and Rhenium Subcategory Direct Dischargers	3437
IX-1	BPT Wastewater Discharge Rates for the Primary Molybdenum and Rhenium Subcategory	3446
IX-2	BPT Mass Limitations for the Primary Molybdenum and Rhenium Subcategory	3447
X-1	Current Recycle Practices Within the Primary Molybdenum and Rhenium Subcategory	3459
X-2	Pollutant Removal Estimates for Direct Dischargers Primary Molybdenum and Rhenium Subcategory	3460
X-3	Cost of Compliance for the Primary Molybdenum and Rhenium Subcategory Direct Dischargers	3461
X-4	BAT Wastewater Discharge Rates for the Primary Molybdenum and Rhenium Subcategory	3462
X-5	BAT Mass Limitations for the Primary Molybdenum and Rhenium Subcategory	3463
XI-1	NSPS Wastewater Discharge Rates for the Primary Molybdenum and Rhenium Subcategory	3472
XI-2	NSPS for the Primary Molybdenum and Rhenium Subcategory	3473
XII-1	PSNS Wastewater Discharge Rates for the Primary Molybdenum and Rhenium Subcategory	3480
XII-2	PSNS for the Primary Molybdenum and Rhenium Subcategory	3481

LIST OF FIGURES

Figure	Title	Page
III-1	Primary Molybdenum and Rhenium Production Processes	3370
III-2	Geographic Locations of the Primary Molybdenum and Rhenium Subcategory Plants	3371
V-1	Sampling Sites at Primary Molybdenum Plant B	3414
V-2	Sampling Sites at Primary Molybdenum Plant C	3415
V-3	Sampling Sites at Primary Molybdenum Plant D	3416
IX-1	BPT Treatment Scheme for the Primary Molybdenum and Rhenium Subcategory	3450
X-1	BAT Treatment Scheme for Option A	3466
X-2	BAT Treatment Scheme for Option B	3467
X-3	BAT Treatment Scheme for Option C	3468

THIS PAGE INTENTIONALLY LEFT BLANK

SECTION I

SUMMARY

This document provides the technical basis for promulgating effluent limitations based on best practicable technology (BPT) and best available technology economically achievable (BAT) for existing direct dischargers, pretreatment standards for new indirect dischargers (PSNS), and standards of performance for new source direct dischargers (NSPS) for plants in the primary molybdenum and rhenium subcategory.

The primary molybdenum and rhenium subcategory consists of 13 plants. Four of these 13 plants operate molybdenum metallurgical acid plants. Of the 13 plants, four discharge directly to rivers, lakes, or streams and nine achieve zero discharge of process wastewater.

EPA first studied the primary molybdenum and rhenium subcategory to determine whether differences in raw materials, final products, manufacturing processes, equipment, age and size of plants, and water usage required the development of separate effluent limitations and standards for different segments of the subcategory. This involved a detailed analysis or wastewater discharge and treated effluent characteristics, including the sources and volume of water used, the processes used, the sources of pollutants and wastewaters in the plant, and the constituents of wastewaters, including toxic priority pollutants. As a result, five subdivisions have been identified for this subcategory that warrant separate effluent limitations. These include:

- Molybdenum sulfide leachate,
- Roaster SO_2 scrubber,
- Molybdic oxide leachate,
- Hydrogen reduction furnace scrubber, and
- Depleted rhenium scrubbing solution.

EPA also identified several distinct control and treatment technologies (both in-plant and end-of-pipe) applicable to the primary molybdenum and rhenium subcategory. The Agency analyzed both historical and newly generated data on the performance of these technologies, including their nonwater quality environmental impacts and air quality, solid waste generation, and energy requirements. EPA also studied various flow reduction techniques reported in the data collection portfolios (dcp) and plant visits.

Engineering costs were prepared for each plant for each of the control and treatment options considered for the subcategory. These costs were then used by the Agency to estimate the impact of implementing the various options in the subcategory. For each control and treatment option that the Agency found to be most effective and technically feasible in controlling the discharge

of pollutants, we estimated the number of potential closures, number of employees affected, and impact on price. These results are reported in a separate document entitled "The Economic Impact Analysis of Effluent Limitations and Standards for the Nonferrous Metals Manufacturing Industry."

After examining the various treatment technologies being operated in the subcategory, the Agency has identified BPT to represent the average of the best existing technology. Metals removal based on chemical precipitation and sedimentation technology is the basis for the BPT limitations. Steam stripping was selected as the technology basis for ammonia limitations. Iron coprecipitation was selected as the basis for molybdenum limitations. To meet the BPT effluent limitations based on this technology, the primary molybdenum and rhenium subcategory is estimated to incur a capital and an annual cost. These cost figures cannot be presented here because the data on which they are based have been claimed to be confidential.

For BAT, the Agency has built upon the BPT technology basis by adding in-process control technologies which include recycle of process water from air pollution control waste streams. Filtration is added as an effluent polishing step to the end-of-pipe treatment scheme. To meet the BAT effluent limitations based on this technology, the primary molybdenum and rhenium subcategory is estimated to incur a capital and an annual cost. These cost figures cannot be presented here because the data on which they are based have been claimed to be confidential.

For BAT, the Agency has built upon the BPT technology basis by adding in-process control technologies which include recycle of process water from air pollution control waste streams. Filtration is added as an effluent polishing step to the end-of-pipe treatment scheme. To meet the BAT effluent limitations based on this technology, the primary molybdenum and rhenium subcategory is estimated to incur a capital and an annual cost. These cost figures cannot be presented here because the data on which they are based have been claimed to be confidential.

NSPS is equivalent to BAT. In selecting NSPS, EPA recognizes that new plants have the opportunity to implement the best and most efficient manufacturing processes and treatment technology. However, no such processes or treatment technology were considered to meet the NSPS criteria. Therefore, the technology basis of BAT has been determined as the best demonstrated technology.

The mass limitations and standards for BPT, BAT, NSPS, and PSNS are presented in Section II.

SECTION II

CONCLUSIONS

EPA has divided the primary molybdenum and rhenium subcategory into five subdivisions for the purpose of effluent limitations and standards. These subdivisions are:

(a) Molybdenum sulfide leachate,
(b) Roaster SO_2 scrubber.
(c) Molybdic oxide leachate,
(d) Hydrogen reduction furnace scrubber, and
(e) Depleted rhenium scrubbing solution.

BPT is promulgated based on the performance achievable by the application of chemical precipitation and sedimentation (lime and settle) technology, along with preliminary treatment consisting of ammonia steam stripping and iron co-precipitation for selected waste streams. The following BPT effluent limitations are promulgated:

(a) Molybdenum Sulfide Leachate BPT

Pollutant or Pollutant Property	Maximum for Any One Day	Maximum for Monthly Average
mg/kg (lb/million lbs) of molybdenum sulfide leached		
Arsenic	0.968	0.431
Lead	0.195	0.093
Nickel	0.889	0.588
Selenium	0.570	0.255
Fluoride	16.210	9.214
Molybdenum	Reserved	Reserved
Ammonia (as N)	61.720	27.130
TSS	18.980	9.029
pH	Within the range of 7.5 to 10.0 at all times	

(b) Roaster SO_2 Scrubber BPT

Pollutant or Pollutant Property	Maximum for Any One Day	Maximum for Monthly Average
mg/kg (lb/million lbs) of molybdenum sulfide roasted		
Arsenic	3.509	1.561
Lead	0.705	0.336
Nickel	3.224	2.133
Selenium	2.065	0.924
Fluoride	58.770	33.410
Molybdenum	Reserved	Reserved
Ammonia (as N)	223.800	98.390
TSS	68.840	32.740
pH	Within the range of 7.5 to 10.0 at all times	

(c) Molybdic Oxide Leachate BPT

Pollutant or Pollutant Property	Maximum for Any One Day	Maximum for Monthly Average
mg/kg (lb/million lbs) of molybdenum contained in molybdic oxide leached		
Arsenic	24.210	10.770
Lead	4.865	2.317
Nickel	22.240	14.710
Selenium	14.250	6.371
Fluoride	405.400	230.500
Molybdenum	Reserved	Reserved
Ammonia (as N)	1,544.000	678.800
TSS	474.900	225.900
pH	Within the range of 7.5 to 10.0 at all times	

(d) Hydrogen Reduction Furnace Scrubber

Pollutant or Pollutant Property	Maximum for Any One Day	Maximum for Monthly Average
mg/kg (lb/million lbs) of molybdenum metal powder produced		
Arsenic	47.860	21.300
Lead	9.617	4.580
Nickel	43.970	29.080
Selenium	28.170	12.600
Fluoride	801.400	455.700
Molybdenum	Reserved	Reserved
Ammonia (as N)	3,052.000	1,342.000
TSS	938.800	446.500
pH	Within the range of 7.5 to 10.0 at all times	

(e) Depleted Rhenium Scrubbing Solution

Pollutant or Pollutant Property	Maximum for Any One Day	Maximum for Monthly Average
mg/kg (lb/million lbs) of molybdenum sulfide roasted		
Arsenic	1.497	0.666
Lead	0 301	0.143
Nickel	1.375	0.909
Selenium	0.881	0.394
Fluoride	25.060	14.250
Molybdenum	Reserved	Reserved
Ammonia (as N)	95.440	41.960
TSS	29.360	13.960
pH	Within the range of 7.5 to 10.0 at all times	

BAT is promulgated based on the performance achievable by the application of chemical precipitation, sedimentation and multimedia filtration (lime, settle and filter) technology and in-process flow reduction methods, along with preliminary treatment consisting of ammonia steam stripping and iron co-precipitation for selected waste streams. The following BAT effluent limitations are promulgated:

(a) Molybdenum Sulfide Leachate BAT

Pollutant or Pollutant Property	Maximum for Any One Day	Maximum for Monthly Average
mg/kg (lb/million lbs) of molybdenum sulfide leached		
Arsenic	0.644	0.287
Lead	0.130	0.060
Nickel	0.255	0.171
Selenium	0.380	0.171
Fluoride	16.210	9.214
Molybdenum	Reserved	Reserved
Ammonia (as N)	61.720	27.130

(b) Roaster SO_2 Scrubber BAT

Pollutant or Pollutant Property	Maximum for Any One Day	Maximum for Monthly Average
mg/kg (lb/million lbs) of molybdenum sulfide roasted		
Arsenic	2.334	1.041
Lead	0.470	0.218
Nickel	0.924	0.621
Selenium	1.377	0.621
Fluoride	58.770	33.410
Molybdenum	Reserved	Reserved
Ammonia (as N)	223.800	98.390

(c) Molybdic Oxide Leachate BAT

Pollutant or Pollutant Property	Maximum for Any One Day	Maximum for Monthly Average
mg/kg (lb/million lbs) of molybdenum contained in molybdic oxide leached		
Arsenic	16.100	7.182
Lead	3.244	1.506
Nickel	6.371	4.286
Selenium	9.499	4.286
Fluoride	405.400	230.500
Molybdenum	Reserved	Reserved
Ammonia (as N)	1,544.000	678.800

(d) Hydrogen Reduction Furnace Scrubber BAT

Pollutant or Pollutant Property	Maximum for Any One Day	Maximum for Monthly Average
mg/kg (lb/million lbs) of molybdenum metal powder produced		
Arsenic	3.183	1.420
Lead	0.641	0.298
Nickel	1.260	0.847
Selenium	1.878	0.847
Fluoride	80.150	45.570
Molybdenum	Reserved	Reserved
Ammonia (as N)	305.300	134.200

(e) Depleted Rhenium Scrubbing Solution BAT

Pollutant or Pollutant Property	Maximum for Any One Day	Maximum for Monthly Average
mg/kg (lb/million lbs) of molybdenum sulfide roasted		
Arsenic	0.995	0.444
Lead	0.201	0.093
Nickel	0.394	0.265
Selenium	0.587	0.265
Fluoride	25.060	14.250
Molybdenum	Reserved	Reserved
Ammonia (as N)	95.440	41.960

NSPS is based on the performance achievable by the application of chemical precipitation, sedimentation and multimedia filtration (lime, settle and filter) technology, and in-process flow reduction control methods, along with preliminary treatment consisting of ammonia steam stripping and iron co-precipitation for selected waste streams. The following effluent standards are promulgated for new sources:

(a) Molybdenum Sulfide Leachate NSPS

Pollutant or Pollutant Property	Maximum for Any One Day	Maximum for Monthly Average
mg/kg (lb/million lbs) of molybdenum sulfide leached		
Arsenic	0.644	0.287
Lead	0.130	0.060
Nickel	0.255	0.171
Selenium	0.380	0.171
Fluoride	16.210	9.214
Molybdenum	Reserved	Reserved
Ammonia (as N)	61.720	27.130
TSS	6.945	5.556
pH	Within the range of 7.5 to 10.0 at all times	

(b) Roaster SO_2 Scrubber NSPS

Pollutant or Pollutant Property	Maximum for Any One Day	Maximum for Monthly Average
mg/kg (lb/million lbs) of molybdenum sulfide roasted		
Arsenic	2.334	1.041
Lead	0.470	0.218
Nickel	0.924	0.621
Selenium	1.377	0.621
Fluoride	58.770	33.410
Molybdenum	Reserved	Reserved
Ammonia (as N)	223.800	98.390
TSS	25.190	20.150
pH	Within the range of 7.5 to 10.0 at all times	

(c) Molybdic Oxide Leachate NSPS

Pollutant or Pollutant Property	Maximum for Any One Day	Maximum for Monthly Average
	mg/kg (lb/million lbs) of molybdenum contained in molybdic oxide leached	
Arsenic	16.100	7.182
Lead	3.244	1.506
Nickel	6.371	4.286
Selenium	9.499	4.286
Fluoride	405.400	230.500
Molybdenum	Reserved	Reserved
Ammonia (as N)	1,544.000	678.800
TSS	173.800	139.000
pH	Within the range of 7.5 to 10.0 at all times	

(d) Hydrogen Reduction Furnace Scrubber NSPS

Pollutant or Pollutant Property	Maximum for Any One Day	Maximum for Monthly Average
	mg/kg (lb/million lbs) of molybdenum metal powder produced	
Arsenic	3.183	1.420
Lead	0.641	0.298
Nickel	1.260	0.847
Selenium	1.878	0.847
Fluoride	80.150	45.570
Molybdenum	Reserved	Reserved
Ammonia (as N)	305.300	134.200
TSS	34.350	27.480
pH	Within the range of 7.5 to 10.0 at all times	

(e) Depleted Rhenium Scrubbing Solution

Pollutant or Pollutant Property	Maximum for Any One Day	Maximum for Monthly Average
mg/kg (lb/million lbs) of molybdenum sulfide roasted		
Arsenic	0.995	0.444
Lead	0.201	0.093
Nickel	0.394	0.265
Selenium	0.587	0.265
Fluoride	25.060	14.250
Molybdenum	Reserved	Reserved
Ammonia (as N)	94.440	41.960
TSS	10.740	8.592
pH	Within the range of 7.5 to 10.0 at all times	

EPA is not promulgating pretreatment standards for existing sources (PSES) for the primary molybdenum and rhenium subcategory.

PSNS are promulgated based on the performance achievable by the application of chemical precipitation, sedimentation and multimedia filtration lime, settle and filter) technology, and in-process flow reduction control methods, along with preliminary treatment consisting of ammonia steam stripping and iron co-precipitation for selected waste streams. The following pretreatment standards are promulgated for new sources:

(a) Molybdenum Sulfide Leachate PSNS

Pollutant or Pollutant Property	Maximum for Any One Day	Maximum for Monthly Average
mg/kg (lb/million lbs) of molybdenum sulfide leached		
Arsenic	0.644	0.287
Lead	0.130	0.060
Nickel	0.255	0.171
Selenium	0.380	0.171
Fluoride	16.210	9.214
Molybdenum	Reserved	Reserved
Ammonia (as N)	61.720	27.130

(b) Roaster SO_2 Scrubber PSNS

Pollutant or Pollutant Property	Maximum for Any One Day	Maximum for Monthly Average
mg/kg (lb/million lbs) of molybdenum sulfide roasted		
Arsenic	2.334	1.041
Lead	0.470	0.218
Nickel	0.924	0.621
Selenium	1.377	0.621
Fluoride	58.770	33.410
Molybdenum	Reserved	Reserved
Ammonia (as N)	223.800	98.390

(c) Molybdic Oxide Leachate PSNS

Pollutant or Pollutant Property	Maximum for Any One Day	Maximum for Monthly Average
mg/kg (lb/million lbs) of molybdenum contained in molybdic oxide leached		
Arsenic	16.100	7.182
Lead	3.244	1.506
Nickel	6.371	4.286
Selenium	9.499	4.286
Fluoride	405.400	230.500
Molybdenum	Reserved	Reserved
Ammonia (as N)	1,544.000	678.800

(d) Hydrogen Reduction Furnace Scrubber PSNS

Pollutant or Pollutant Property	Maximum for Any One Day	Maximum for Monthly Average
mg/kg (lb/million lbs) of molybdenum metal powder produced		
Arsenic	3.183	1.420
Lead	0.641	0.298
Nickel	1.260	0.847
Selenium	1.878	0.847
Fluoride	80.150	45.570
Molybdenum	Reserved	Reserved
Ammonia (as N)	305.300	134.200

(e) Depleted Rhenium Scrubbing Solution PSNS

Pollutant or Pollutant Property	Maximum for Any One Day	Maximum for Monthly Average
mg/kg (lb/million lbs) of molybdenum sulfide roasted		
Arsenic	0.995	0.444
Lead	0.201	0.093
Nickel	0.394	0.265
Selenium	0.587	0.265
Fluoride	25.060	14.250
Molybdenum	Reserved	Reserved
Ammonia (as N)	95.440	41.960

EPA is not promulgating best conventional pollutant control technology (BCT) limitations at this time.

SECTION III

SUBCATEGORY PROFILE

This section of the primary molybdenum and rhenium supplement describes the raw materials and processes used in the production of primary molybdenum and rhenium, and presents a profile of the primary molybdenum and rhenium subcategory plants identified in this study.

Molybdenum is used primarily in steel production as an alloying agent which results in improved hardness, strength, and resistance to corrosion and high temperatures. It is produced primarily as technical grade molybdic oxide (MoO_3), most of which is sold directly to steel producers. Approximately 28 percent of technical grade molybdic oxide produced is further processed to metal powder, pure molybdic oxide, ammonium molybdate, and a variety of other chemical forms.

Rhenium is recovered as a by-product from the roasting of molybdenum sulfide concentrates. Less than 10 metric tons per year of rhenium is produced domestically, 90 percent of which is used in bimetallic platinum rhenium reforming catalysts. These catalysts are used in the petroleum refining industry to produce low lead and lead free high octane gasolines.

DESCRIPTION OF PRIMARY MOLYBDENUM AND RHENIUM PRODUCTION

The production of molybdenum products can be divided into four general processes -- roasting of molybdenum sulfide concentrates, production of pure molybdic oxide, production of ammonium molybdate compounds, and reduction of pure molybdic oxide or ammonium molybdate to produce molybdenum metal powder.

Rhenium is recovered from molybdenum roaster flue gases as crude ammonium perrhenate which can subsequently be purified and reduced to rhenium metal. The primary molybdenum and rhenium production processes are presented schematically in Figure III-1 and described below.

RAW MATERIALS

The primary source of molybdenum is a molybdenum sulfide (MoS_2) ore called molybdenite. Most domestic molybdenite is mined and comes from a mine in New Mexico. Molybdenite is also recovered as a by-product from concentrating porphyry copper ores. Rhenium is produced only from molybdenite which is associated with copper mining operations.

MOLYBDENUM SULFIDE ROASTING

Molybdenite concentrates, which are typically 90 percent molybdenum disulfide (MoS_2), are roasted in multiple hearth

furnaces at temperatures of 500 to 650°C. The product of roasting is technical grade molybdic oxide consisting of 90 to 95 percent MoO_3. The flue gases contain products of combustion, sulfur dioxide, and rhenium heptoxide (Re_4O_7) when molybdenite concentrates from copper mining operations are roasted. Sulfur dioxide emissions are controlled with either a caustic scrubber or a sulfuric acid plant. One plant reported leaching of the molybdenite concentrates with nitric acid as a preliminary treatment step prior to roasting. Leaching at this stage in the process reduces alkali concentrations in the concentrates.

PRODUCTION OF PURE MOLYBDIC OXIDE

Pure molybdic oxide can be produced from technical grade molybdic oxide through sublimation and condensation or by leaching. In sublimation, the tech oxide is heated to approximately 1,100°C in a muffle type furnace. The oxide is vaporized and carried in a stream of forced air through cooling ducts and the condensed oxide particles are collected in a fabric filter. The purified oxide contains greater than 99.5 percent MoO_3.

Technical grade oxide may also be purified by leaching with a hydrochloric acid-ammonium chloride solution. The impurities are dissolved and separated from the solid molybdic oxide by filtration. The pure oxide may be sold as a product, reduced to molybdenum metal powder, or used to produce various molybdenum chemicals.

PRODUCTION OF AMMONIUM MOLYBDATE COMPOUNDS

Technical grade molybdic oxide is dissolved in ammonium hydroxide solution and recrystallized as pure ammonium molybdate compounds. The ammonium molybdate may be sold as a product, calcined to form pure molybdic oxide, or reduced to form molybdenum metal powder.

REDUCTION TO MOLYBDENUM METAL

Either pure molybdic oxide or ammonium molybdate may be reduced in a hydrogen atmosphere to produce molybdenum metal powder. The reduction of molybdic oxide to molybdenum metal is typically a two stage process carried out in two separate furnaces. In the first stage, molybdic oxide, MoO_3, is reduced to brown molybdenum dioxide, MoO_2, under a hydrogen atmosphere at 1,100°F. In the second stage furnace, molybdenum dioxide is reduced to molybdenum metal at 2,000°F. The second stage hydrogen reduction furnace may be equipped with a wet scrubber to clean and cool the hydrogen gas prior to reuse.

RECOVERY OF RHENIUM

When molybdenite concentrates from copper mining operations are roasted at approximately 600°C, rhenium present in the concentrate is volatilized as rhenium heptoxide (Re_2O_7). The rhenium heptoxide is water soluble and is removed from the flue gas by wet scrubbing. The efficiency with which rhenium is

recovered from the flue gas is approximately 64 percent. Hoc electrostatic precipitators or baghouses are used upstream from the rhenium recovery scrubber in order to minimize the amount of impurities in the scrubber solution. Impurities in the scrubber liquor, particularly molybdenum and other base metals, are removed by precipitation and filtration. The rhenium is then recovered from the scrubber liquor via selective ion exchange or solvent extraction. Rhenium is stripped from the resin or solvent with aqueous ammonia and crude ammonium perrhenate, NH_4ReO_4, is crystallized from the resulting solution. The crude ammonium perrhenate may be sold as a product, further purified prior to reduction to rhenium metal, or used in the manufacture of various rhenium chemicals. The reduction to metal is a dry process.

PROCESS WASTEWATER SOURCES

Although a variety of processes are involved in primary molybdenum and rhenium production, the process wastewater sources can be subdivided as follows:

1. Molybdenum sulfide leachate,
2. Roaster SO_2 scrubber,
3. Molybdic oxide leachate,
4. Hydrogen reduction furnace scrubber, and
5. Depleted rhenium scrubber solution.

OTHER WASTEWATER SOURCES

There may be other wastewater streams associated with the primary molybdenum and rhenium subcategory. These streams include noncontact cooling water, stormwater runoff, and maintenance and cleanup water. These wastewater streams are not considered as a part of this rulemaking. EPA believes that the flows and pollutant loadings associated with these wastewaters are insignificant relative to the waste streams selected, and are best handled by the appropriate permit authority on a case-by-case basis under authority of Section 403 of the Clean Water Act.

AGE, PRODUCTION, AND PROCESS PROFILE

Table III-1(page 3366) shows the relative age and discharge status of the molybdenum and rhenium plants. The average plant age is between 25 and 35 years. The plant age distribution is generally uniform with the plant ages ranging from eight to 67 years. Tables Ill-2 and III-3 (page 3367) show the 1982 production ranges for primary molybdenum and rhenium, respectively. Table III-4 (page 3369) provides a summary of the number of plants generating wastewater streams associated with the various primary molybdenum and rhenium processes and the number of plants with the process. Figure Ill-2 (page 3370) shows the geographic locations of the primary molybdenum and rhenium facilities in the United States by discharge status.

Table III-1

INITIAL OPERATING YEAR (RANGE) SUMMARY OF PLANTS IN THE PRIMARY MOLYBDENUM AND RHENIUM SUBCATEGORY BY DISCHARGE TYPE

	Initial Operating Year (Range) (Plant Age in Years)								
Discharge Type	1982-1973 (0-10)	1972-1968 (11-15)	1967-1958 (16-25)	1957-1948 (26-35)	1947-1938 (36-45)	1937-1928 (46-55)	1927-1918 (56-65)	Before 1918 (65+)	Total
Direct	1	0	1	1	1	0	0	0	4
Indirect	0	0	0	0	0	0	0	0	0
Zero	1	1	1	0	0	0	1	1	5
Dry	1	0	0	1	0	2	0	0	4
Total	3	1	2	2	1	2	1	1	13

Table III-2

PRODUCTION RANGES FOR PRIMARY MOLYBDENUM PLANTS
MOLYBDENUM PRODUCTION RANGES FOR 1982

Discharge Type	0-1,000 kkg/yr	1,000-10,000 kkg/yr	10,000-20,000 kkg/yr	Total
Direct	2	1	1	4
Indirect	0	0	0	0
Zero	1	4	0	5
Dry	3	0	0	3
Total	6	5	1	12*

*Twelve of the 13 plants in this subcategory produce molybdenum.

TABLE III-3

PRODUCTION RANGES FOR PRIMAARY RHENIUM PLANTS

RHENIUM PRODUCTION RANGE FOR 1982

Discharge type	0-1 kkg/yr	1-5 kkg/yr	Total
Direct	0	0	0
Indirect	0	0	0
Zero	1	1	2
Total	2	1	3*

* Three of the 13 plants in this subcategory produce rhenium

Table III-4

SUMMARY OF PRIMARY MOLYBDENUM AND RHENIUM SUBCATEGORY PROCESSES AND ASSOCIATED WASTE STREAMS

Process or Waste Stream	Number of Plants With Process	Number of Plants Reporting Generation of Wastewater*
Molybdenum Sulfide Roasting	7	
- Molybdenum Sulfide Leachate		1
- Roaster SO_2 Scrubber		3
- Sulfuric Acid Plant		3
Sublimation	1	
Molybdic Oxide Leaching	3	
- Molybdic Oxide Leachate	4	3
Ammonium Molybdate Production	3	
Reduction to Molybdenum Metal	6	
- Hydrogen Reduction Furnace Scrubber		2
Rhenium Recovery	3	
- Rhenium Scrubbing Solution		2

*Through reuse or evaporation practices, a plant may "generate" wastewater from a particular process but not discharge it.

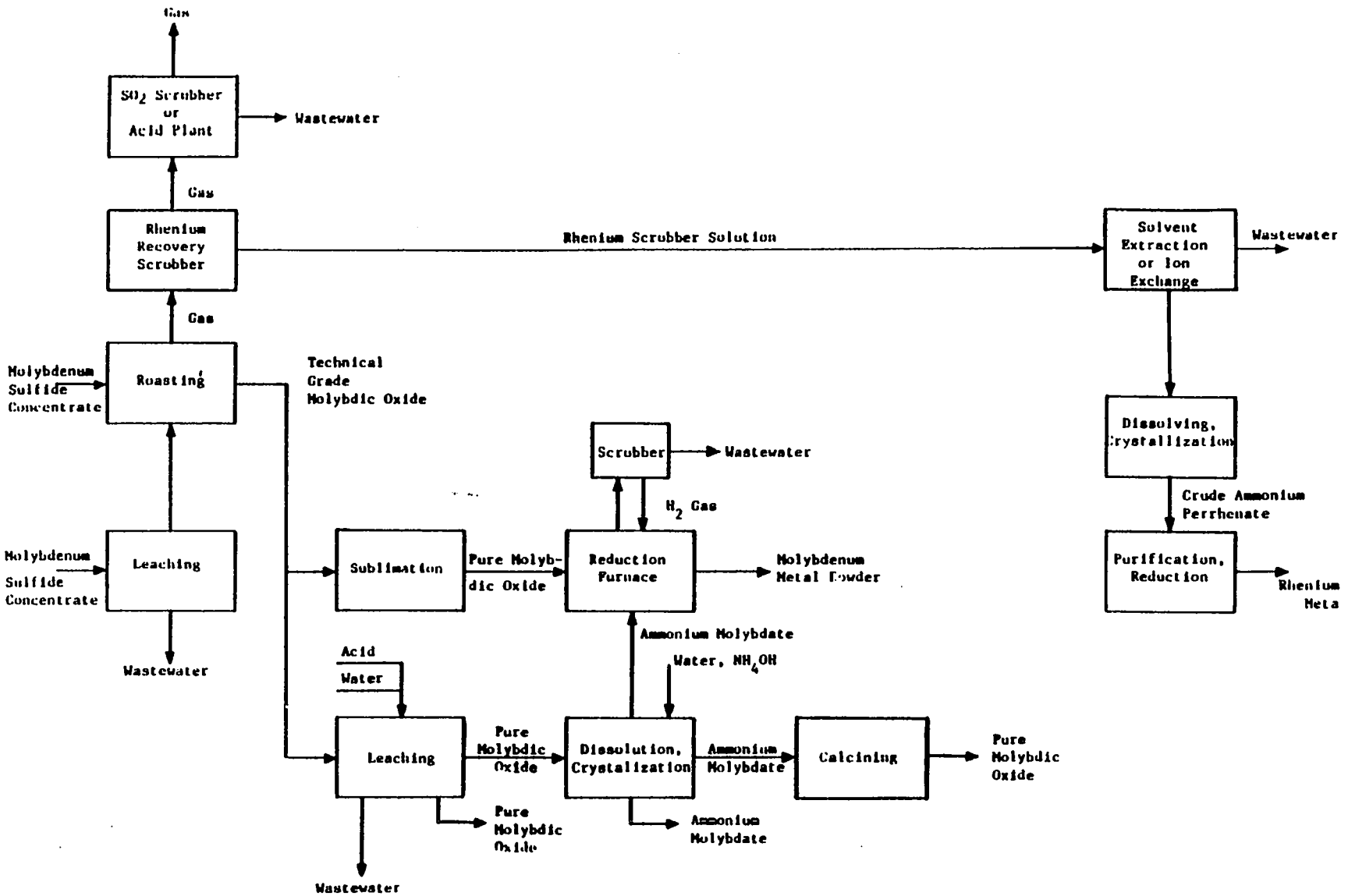

Figure III-1

PRIMARY MOLYBDENUM AND RHENIUM PRODUCTION PROCESSES

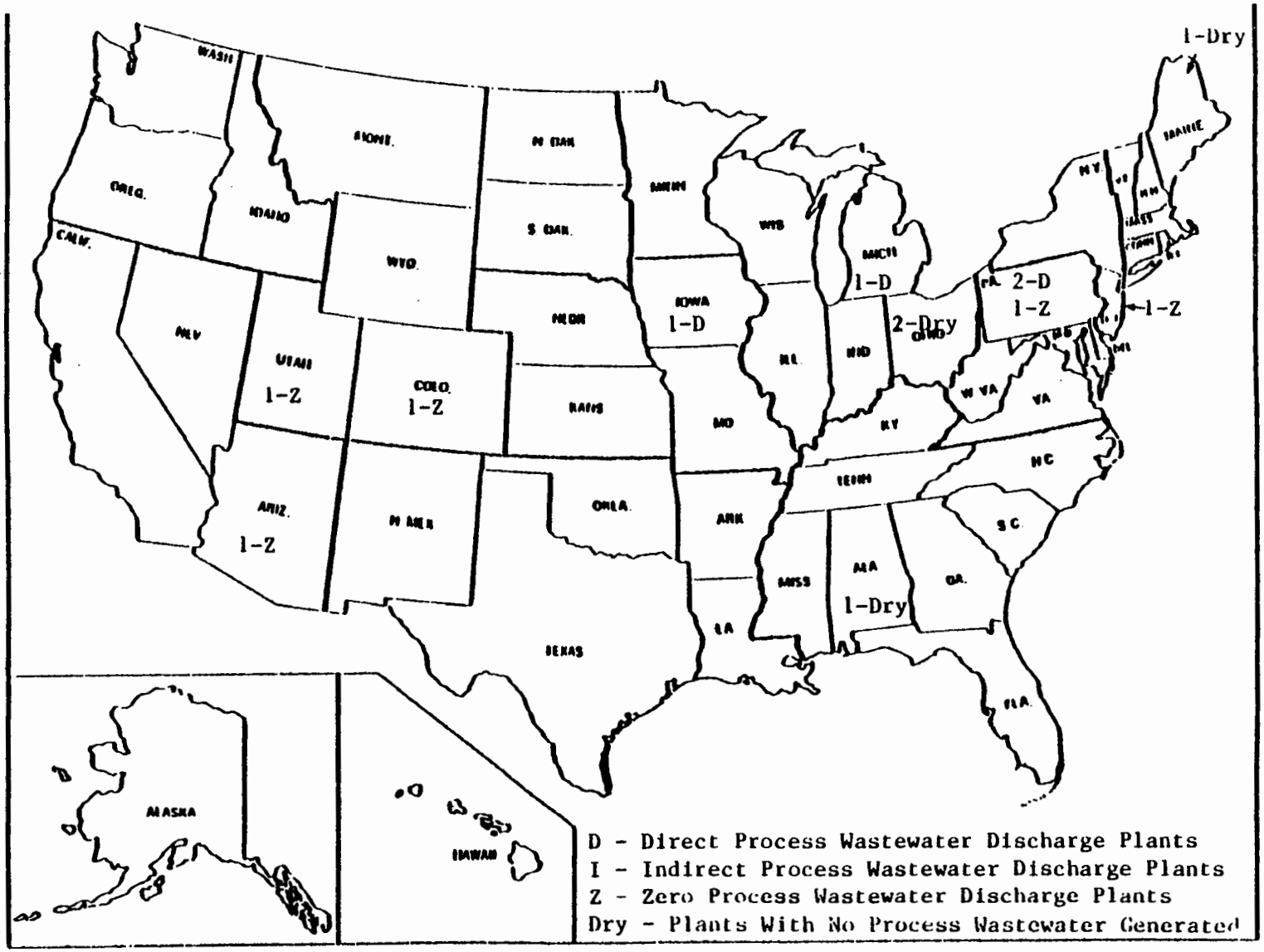

Figure III-2

GEOGRAPHIC LOCATIONS OF THE PRIMARY MOLYBDENUM AND RHENIUM SUBCATEGORY PLANTS

SECTION IV

SUBCATEGORIZATION

This section summarizes the factors considered during the designation of the related subdivisions of primary molybdenum and rhenium subcategory.

FACTORS CONSIDERED IN SUBDIVIDING THE PRIMARY MOLYBDENUM AND RHENIUM SUBCATEGORY

The factors listed previously for general subcategorization were each evaluated when considering subdivision of the primary molybdenum and rhenium subcategory. In the discussion that follows, the factors will be described as they pertain to this particular subcategory.

The rationale for considering further subdivision of the primary molybdenum and rhenium subcategory is based primarily on differences in the production processes and raw materials used. Within this subcategory, a number of different operations are performed, which may or may not have a water use or discharge, and which may require the establishment of separate effluent limitations. While primary molybdenum and rhenium is still considered a single subcategory, a more thorough examination of the production processes has illustrated the need for limitations and standards based on a specific set of waste streams. Limitations will be based on specific flow allowances for the following subdivisions:

1. Molybdenum sulfide leachate,
2. Roaster SO_2 scrubber,
3. Molybdic oxide leachate,
4. Hydrogen reduction furnace scrubber, and
5. Depleted rhenium scrubbing solution.

These subdivisions follow directly from differences within the five distinct production stages of primary molybdenum and rhenium production: production of technical grade molybdic oxide, production of pure molybdic oxide, production of ammonium molybdate, production of molybdenum metal powder, and rhenium recovery.

The production of technical grade molybdic oxide gives rise to the first and second subdivisions. If the molybdenum sulfide is leached with nitric acid to remove excess alkali prior to roasting spent leachate and rinse water are the resultant waste streams. The control of sulfur dioxide emissions from roaster flue gases results in an SO_2 scrubber blowdown waste stream.

The production of pure molybdenum via sublimation and condensation is a dry process and does not result in the generation of any wastewater.

The third subdivision results from the leaching of molybdic oxide prior to either dissolution and crystallization of ammonium molybdate, or production of pure molybdic oxide. Spent nitric or hydrochloric acid leachate and rinse water comprise the wastewater associated with this operation.

The reduction of either pure molybdic oxide or ammonium molybdate to molybdenum metal powder gives rise to the fourth subdivision. Hydrogen gas, which is used to maintain a reducing atmosphere in the reduction furnace, may be scrubbed with water prior to being recycled to the reduction furnace. The scrubber liquor blowdown may be discharged as a wastewater stream.

The recovery of rhenium from molybdenite roaster flue gases as crude ammonium perrhenate results in the fifth subdivision. Prior to SO_2 scrubbing, the flue gases are scrubbed with water to recover rhenium. When the rhenium is recovered via solvent extraction or ion exchange, the depleted scrubber solution is discarded as a wastewater stream.

OTHER FACTORS

The other factors considered in this evaluation either support the establishment of the five subdivisions or were shown to be inappropriate bases for subdivision. Air pollution control methods, treatment costs, and total energy requirements are functions of the selected subcategorization factors -- metal product, raw materials, and production processes. Therefore, they are not independent factors and do not affect the subcategorization which has been applied. As discussed in Section IV of the General Development Document, certain other factors, such as plant age, plant size, and the number of employees, were also evaluated and determined to be inappropriate for use as bases for subdivision of nonferrous metals plants.

PRODUCTION NORMALIZING PARAMETERS

As discussed previously, the effluent limitations and standards developed in this document establish mass limitations on the discharge of specific pollutant parameters. To allow these regulations to be applied to plants with various production capacities. the mass of pollutant discharged must be related to a unit of production. This factor is known as the production normalizing parameter (PNP).

In general, for each production process which has a wastewater associated with it, the actual mass of molybdenum or rhenium product, intermediate or raw material processed will be used as the PNP. Thus, the PNPs for the five subdivisions are as follows:

Building Block	PNP
1. Molybdenum sulfide leachate	kkg of molybdenum sulfide leached
2. Roaster SO_2 scrubber	kkg of molybdenum sulfide roasted
3. Molybdic oxide leachate	kkg of molybdenum contained in molybdic oxide leached
4. Hydrogen reduction furnace scrubber	kkg of molybdenum metal powder produced
5. Depleted rhenium scrubbing solution	kkg of molybdenum sulfide roasted

At proposal the PNP for Subdivision 3, molybdic oxide leachate, was kkg of ammonium molybdate produced. For promulgation, this PNP is revised to kkg of molybdenum contained in the molybdic oxide leached. As discussed in Sections V and IX, this change does not affect the mass limitations promulgated for any plant in this subcategory. The change was made to more accurately reflect actual manufacturing processes.

SECTION V

WATER USE AND WASTEWATER CHARACTERISTICS

This section describes the characteristics of the wastewaters associated with the primary molybdenum and rhenium subcategory. Water use and discharge rates are explained and then summarized in tables at the end of this section. Data used to characterize the wastewaters are presented. Finally, the specific source, water use and discharge flows, and wastewater characteristics for each separate wastewater source are discussed.

The two principal data sources used are the data collection portfolios (dcp) and field sampling results. Data collection portfolios contain information regarding wastewater flows and production levels.

In order to quantify the pollutant discharge from primary molybdenum and rhenium plants, a field sampling program was conducted. Samples were analyzed for 124 of the 126 priority pollutants and other pollutants deemed appropriate. Because the analytical standard for TCDD was judged to be too hazardous to be made generally available, samples were never analyzed for this pollutant. There is no reason to expect that TCDD would be present in nonferrous metals manufacturing wastewater. Asbestos was not analyzed for, nor is there any reason to expect that asbestos would be present in primary molybdenum and rhenium wastewater. A total of four plants were selected for sampling in the primary molybdenum and rhenium subcategory. In general, the samples were analyzed for three classes of pollutants: organic priority pollutants, metal priority pollutants, and criteria pollutants (which includes both conventional and nonconventional pollutants).

Following proposal, additional wastewater characteristics and flow and production data were obtained through industry comments and a field sampling episode. These data were used to confirm assumptions made at proposal. These data are contained in the administrative record for this rulemaking.

After proposal, EPA gathered additional wastewater sampling data for one of the subdivisions in this subcategory through a self-sampling program initiated at the specific request of the Agency. The data include analyses for the priority metals arsenic, beryllium, cadmium, chromium, copper, lead, nickel, selenium, and zinc. The data also include analyses for the nonconventional pollutants ammonia and molybdenum. These data show pollutant concentrations similar to those indicated by the data which EPA had acquired for these subdivisions prior to proposal (see Table V-9, page 3401) For this reason, the selection of pollutant parameters for limitation in this subcategory (Section VI) has not been revised based on this new data.

As described in Section IV of this supplement, the primary molybdenum and rhenium subcategory has been divided into five subdivisions or building blocks, so that the promulgated regulation contains mass discharge limitations and standards for five unit processes discharging process wastewater. Differences in the wastewater characteristics associated with these subdivisions are to be expected. For this reason, wastewater streams corresponding to each subdivision are addressed separately in the discussions that follow. These wastewater sources are:

1. Molybdenum sulfide leachate,
2. Roaster SO_2 scrubber,
3. Molybdic oxide leachate,
4. Hydrogen reduction furnace scrubber, and
5. Depleted rhenium scrubbing solution.

WASTEWATER FLOW RATES

Data supplied by dcp responses were evaluated, and two flow-to-production ratios, water use and wastewater discharge, were calculated for each stream. The two ratios are differentiated by the flow value used in calculation. Water use is defined as the volume of water or other fluid required for a given process per mass of molybdenum product and is therefore based on the sum of recycle and make-up flows to a given process. Wastewater flow discharged after pretreatment or recycle (if these are present) is used in calculating the production normalized flow--the volume of wastewater discharged from a given process to further treatment, disposal, or discharge per mass of molybdenum produced. Differences between the water use and wastewater flows associated with a given stream result from recycle, evaporation, and carry-over on the product. The production values used in calculation correspond to the production normalizing parameter, PNP, assigned to each stream, as outlined in Section IV. As an example, hydrogen reduction furnace scrubber water flow is related to the production of molybdenum metal powder. As such, the discharge rate is expressed in liters of scrubber water per metric ton of molybdenum metal powder produced (gallons of scrubber water per ton of molybdenum powder).

The production normalized discharge flows were compiled and statistically analyzed by stream type. These production normalized water use and discharge flows are presented by subdivision in Tables V-1 through V-5 (pages 3382 - 3386). Where appropriate, an attempt was made to identify factors that could account for variations in water use and discharge rates. These variations are discussed later in this section by subdivision. A similar analysis of factors affecting the wastewater flows is presented in Sections X, XI, and XII where representative BAT, NSPS, and pretreatment flows are selected for use in calculating the effluent limitations.

The water use and discharge rates shown do not include nonprocess wastewater, such as rainfall runoff and noncontact cooling water.

WASTEWATER CHARACTERIZATION DATA

Data used to characterize the various wastewaters associated with primary molybdenum and rhenium production comes from three sources -- data collection portfolios, analytical data from field sampling trips, and through industry comments or responses to data requests made under authority of Section 308 of the Clean Water Act.

DATA COLLECTION PORTFOLIOS

In the data collection portfolios, the molybdenum and rhenium plants that discharge wastewater were asked to specify the presence or absence of priority pollutants in their wastewater. The responses are summarized below:

Pollutant	Known Present	Believed Present
phenol	1	-
bis(2-ethylhexyl) phthalate	1	-
antimony	-	1
arsenic	4	-
cadmium	2	1
chromium	2	-
copper	6	2
lead	5	1
mercury	1	1
nickel	4	-
selenium	4	-
silver	3	-
zinc	4	-

The other pollutants were never recorded as known or believed present by any facility.

FIELD SAMPLING DATA

In order to quantify the concentrations of pollutants present in wastewater from primary molybdenum and rhenium plants, wastewater samples were collected at four plants, which represents approximately one fourth of the primary molybdenum and rhenium plants in the United States. Diagrams indicating the sampling sites and contributing production processes are shown in Figures V-1 through V-3 (page 3414 - 3416).

One plant (primary molybdenum plant D) was sampled following proposal and the data obtained from this sampling episode are presented in Table V-8(page 3398). One grab sample of molybdic oxide leachate was taken at this plant.

Raw wastewater data are summarized in Tables V-6 through V-8 (page 3389 - 3398). Analytical results for acid plant blowdown and hydrogen reduction furnace scrubber water are given in Tables

V-6 and V-7, respectively. Additional data for hydrogen reduction furnace scrubber water is contained in the confidential record. Note that the stream numbers listed in the tables correspond to those given in individual plant sampling site diagrams, Figures V-1 through V-3. Where no data are listed for a specific day of sampling, the wastewater samples for the stream were not collected. Tables V-9 through V-11 (pages 3401 - 3409) show analytical data for samples of treated and partially treated acid plant wastewater.

Acid plant blowdown data for molybdenum metallurgical acid plants are presented in this document - see Tables V-6, V-9, V-10. and V-11. EPA believes that these data for acid plant blowdown provide a good measure of the wastewater characteristics of several of the primary molybdenum and rhenium subcategory subdivisions. This is discussed further later in this section.

Several points regarding these tables should be noted. First, the data tables include some samples measured at concentrations considered not quantifiable. The base-neutral extractable, acid extractable, and volatile organics generally are considered not quantifiable at concentrations equal to or less than 0.010 mg/l. Below this concentration, organic analytical results are not quantitatively accurate; however, the analyses are useful to indicate the presence of a particular pollutant. The pesticide fraction is considered not quantifiable at concentrations equal to or less than 0.005 mg/l.

Second, the detection limits shown on the data tables for metals and conventional and nonconventional pollutants are not the same in all cases as the published detection limits for these pollutants by the same analytical methods. The detection limits used were reported with the analytical data and hence are the appropriate limits to apply co the data. Detection limit variation can occur as a result of a number of laboratory-specific, equipment-specific, and daily operator-specific factors. These factors can include day-to-day differences in machine calibration, variation in stock solutions, and variation in operators.

Third, the statistical analysis of data includes some samples measured at concentrations considered not quantifiable. For data considered as detected but below quantifiable concentrations, a value of zero is used for averaging. Priority organic, nonconventional, and conventional pollutant data reported with a "less than" sign are considered as detected, but not further quantifiable. A value of zero is also used for averaging. If a pollutant is reported as not detected, it is assigned a value of zero in calculating the average. Finally, metal values reported as less than a certain value were considered as not quantifiable, and consequently were assigned a value of zero in the calculation of the average.

Finally, appropriate source water concentrations are presented with the summaries of the sampling data. The method by which

each sample was collected is indicated by number, as follows:

1. one-time grab
2. manual composite during intermittent process operation
3. 8-hour manual composite
4. 8-hour automatic composite
5. 24-hour manual composite
6. 24-hour automatic composite

WASTEWATER CHARACTERISTICS AND FLOWS BY SUBDIVISION

Because primary molybdenum and rhenium production involves five principal sources of wastewater and each has different characteristics and flows, the wastewater characteristics and discharge rates corresponding to each subdivision will be described separately. A brief description of why the associated production processes generate wastewater and explanations for variations of water use within each subdivision will also be discussed.

MOLYBDENUM SULFIDE LEACHATE

The first step in the production of primary molybdenum is the roasting of molybdenum sulfide concentrates to produce technical grade molybdic oxide. One primary molybdenum producer indicated that a portion of the molybdenum sulfide was leached with nitric acid and water prior to roasting in order to remove excess alkali. This facility also produces molybdenum chemicals from molybdic oxide. Presumably, the excess alkali would be an impurity in the chemical production processes. The spent leachate and rinsewater are then discharged as a waste stream. Water use and discharge rates are shown in liters per metric ton of molybdenum sulfide leached in Table V-1(page 3382).

Wastewater sampling data for priority metals in this waste stream were supplied by the facility. Treatable levels of copper, cadmium, and selenium are present. Based on the fact that this is an acid leaching process, it can be assumed that this wastewater has an acidic pH. It can also be assumed that treatable concentrations of suspended solids are present. The facility which reported this waste stream discharges it to an on-site evaporation pond and contract hauls a portion of the contents of the pond periodically, thereby achieving zero discharge.

ROASTER SO_2 SCRUBBER

When molybdenum sulfide concentrates are roasted to produce technical grade molybdic oxide, the sulfur is carried off in the flue gas as sulfur dioxide. Four facilities reported the use of caustic scrubbers to control SO_2 emissions. Blowdown streams from these scrubbers constitute a significant wastewater stream. Water use and discharge rates are shown in liters per metric ton of molybdenum sulfide roasted in Table V-2 (page 3383).

All four of the facilities reporting this stream achieve zerc discharge through evaporation ponds, lagoon disposal or treatment and reuse in other plant processes. One facility uses this stream as a raw material to a fertilizer plant which produces ammonium sulfate. No EPA field-sampling analytical data are available for this stream; however, it is expected to have an alkaline pH, and contain treatable levels of suspended solids, and priority metals, which are absorbed or entrained from the roaster flue gas. Data submitted by one of the facilities in its dcp indicates that treatable concentrations of lead, selenium, copper, cadmium, and arsenic are present.

MOLYBDIC OXIDE LEACHATE

Technical grade molybdic oxide is leached in order to produce pure molybdic oxide, or as a preliminary step in the production of ammonium molybdate compounds. One plant leaches molybdic oxide with hydrochloric acid and ammonium chloride in order to produce pure molybdic oxide. The leachate and rinsewater are discharged as a wastewater stream.

Ammonium molybdate is produced from technical grade molybdic oxide by dissolution in an aqueous ammonia solution followed by crystallization. The ammonium molybdate is either sold as a product, or further processed to molybdenum metal, pure molybdic oxide, or other molybdenum chemicals. Prior to dissolving in aqueous ammonia, the technical grade molybdic oxide may be leached with nitric acid, aqueous ammonia, or water to remove impurities. The spent leachate and rinse water constitute a wastewater stream. Water use and discharge rates are shown in liters per metric ton of molybdenum contained in the molybdic oxide leached in Table V-3 (page 3384).

Of the three facilities reporting this wastewater stream, one is a direct discharger, after treatment by ammonia stripping, chemical precipitation and sedimentation. Another facility achieves zero discharge through the use of evaporation ponds and contract hauling. The third facility achieves zero discharge through the use of contract hauling.

Analytical data for this waste stream are presented in Table V-9 (page 3401). These data show treatable concentrations of arsenic, cadmium, chromium, copper, lead, nickel, zinc, ammonia, fluoride, molybdenum and TSS, along with an acidic pH. At proposal, this stream was listed as having not been sampled, but expected to contain toxic metals, an acidic pH. and treatable concentrations of TSS. Also, it was expected to contain ammonia if ammonia compounds were used for leaching. The analytical data presented in Table V-8 (page 3398) support these expectations.

Following proposal, sampling data for this subdivision were acquired through a self-sampling effort undertaken at the specific request of EPA. These data are presented in Table V-12 (page 3413) and show treatable concentrations of ammonia, cadmium, chromium, copper, lead, nickel, zinc, and molybdenum,

thus corroborating the data used at proposal.

HYDROGEN REDUCTION FURNACE SCRUBBER

High purity molybdenum metal powder is produced by reducing pure molybdic oxide or ammonium molybdate. Reduction is accomplished in a tube furnace with a hydrogen atmosphere. At two plants, the hydrogen gas is scrubbed with water prior to reuse in the reduction furnaces. Both of these facilities reported a discharge of hydrogen gas scrubber water. Water use and discharge rates are shown in liters per metric ton of molybdenum metal powder produced in Table V-4 (page 3385).

Both of the facilities which reported this wastewater stream discharge it to surface waters with no treatment. Table V-7 (page 3396) presents raw wastewater sampling data for priority and selected conventional and nonconventional pollutants. Additional data for this stream is contained in the confidential record. Treatable concentra-tions of toxic metals are present including lead, nickel, and zinc.

DEPLETED RHENIUM SCRUBBING SOLUTION

Two facilities reported recovery of rhenium from molybdenite roaster flue gases. Rhenium is absorbed from the flue gas into an aqueous ammonia solution through the use of wet scrubbers. After the rhenium has been recovered from the solution through solvent extraction or selective ion exchange, the depleted solution is discharged as a wastewater stream. Water use and discharge rates are shown in liters per metric ton of molybdenum sulfide roasted in Table V-5 (page 3386). The amount of molybdenum sulfide roasted was chosen as the production normalizing parameter for depleted rhenium solution since the amount of water generated in the scrubber is directly related to the volume of flue gases produced, which is, in turn, directly related to the quantity of molybdenum sulfide roasted.

Both of the facilities reporting this wastewater stream achieve zero discharge through treatment and reuse to other plant processes or through the use of evaporation ponds and contract hauling. No analytical data are available for this wastewater stream; however, data supplied by one of the facilities reporting this wastewater indicate that treatable concentrations of selenium are present as well as high concentrations of molybdenum and iron. Priority organics may also be present when solvent extraction is used to recover rhenium from the solution.

TABLE V-1

WATER USE AND DISCHARGE RATES FOR

MOLYBDENUM SULFATE LEACHATE

(l/kkg of molybdenum sulfide leached)

Plant Code	Percent Recycle	Production Normalized Water Use	Production Normalized Discharge Rate
1064	0	463	463

TABLE V-2

WATER USE AND DISCHARGE RATES FOR

ROASTER SO_2 SCRUBBER

(l/kkg of molybdenum sulfide roasted)

Plant Code	Percent Recycle	Production Normalized Water Use	Production Normalized Discharge Rate
1086	0	181	181
1064	0	3117	3117
1174	96	392525	15701
1107	NR	NR	NR

TABLE V-3

WATER USE AND DISCHARGE RATES FOR

MOLYBDIC OXIDE LEACHATE

(l/kkg of molybdenum contained in molybdic oxide leached)

Plant Code	Percent Recycle	Production Normalized Water Use	Production Normalized Discharge Rate
1146	0	25122	25122
1064	0	6020	6020
1099	0	3609	3609

TABLE V-4

WATER USE AND DISCHARGE RATES FOR

MOLYBDENUM SULFATE LEACHATE

(l/kkg of molybdenum sulfide leached)

Plant Code	Percent Recycle	Production Normalized Water Use	Production Normalized Discharge Rate
1182	99	2000	20
1146	0	43795	43795

TABLE V-5

WATER USE AND DISCHARGE RATES FOR

DEPLETED RHENIUM SCRUBBING SOLUTION

(l/kkg of molybdenum sulfide leached)

Plant Code	Percent Recycle	Production Normalized Water Use	Production Normalized Discharge Rate
1107	0	637	637
1064	0	794	794

PRIMARY MOLYBDENUM AND RHENIUM SUBCATEGORY
ACID PLANT BLOWDOWN
RAW WASTEWATER SAMPLING DATA

Pollutant	Stream Code	Sample Type†	Concentrations (mg/l) Source	Day 1	Day 2	Day 3
Toxic Pollutants						
114. antimony	781	6	<0.0020	0.008	0.016	0.008
115. arsenic	781	6	0.00500	0.517	12.4	1.29
117. beryllium	781	6	0.010	0.010	0.010	0.010
118. cadmium	781	6	<0.050	<0.050	<0.050	<0.050
119. chromium (total)	781	6	<0.10	13.0	6.40	3.08
120. copper	781	6	<0.010	0.076	2.92	0.050
121. cyanide (total)	781	1	0.29	0.032	NA	NA
122. lead	781	6	<0.100	1.34	2.70	1.44
123. mercury	781	6	<0.0010	0.018	<0.0010	0.0045
124. nickel	781	6	<0.0100	4.60	3.68	1.28
125. selenium	781	6	<0.0100	1.25	61.2	2.15
126. silver	781	6	<0.002	0.002	0.002	<0.002

Table V-6 (Continued)

PRIMARY MOLYBDENUM AND RHENIUM SUBCATEGORY
ACID PLANT BLOWDOWN
RAW WASTEWATER SAMPLING DATA

Pollutant	Stream Code	Sample Type†	Concentrations (mg/l) Source	Day 1	Day 2	Day 3
Toxic Pollutants (Continued)						
127. thallium	781	6	<0.005	<0.005	<0.005	<0.005
128. zinc	781	6	<0.0500	<0.0500	2.35	<0.0500
Nonconventional Pollutants						
acidity	781	6	<1	1,800	NA	940
alkalinity	781	6	200	<1	NA	<1
aluminum	781	6	0.00370	1.98	2.76	0.18
ammonia nitrogen	781	6	0.75	1.3	NA	1.2
barium	781	6	0.20	0.066	0.22	0.074
boron	781	6	<0.100	4.76	1.07	0.240
calcium	781	6	63.5	75	191	82
chemical oxygen demand (COD)	781	6	<1	190	NA	190
chloride	781	6	20	57	NA	110
cobalt	781	6	<0.100	<0.100	<0.100	<0.100
fluoride	781	6	0.68	480	NA	25

Table V-6 (Continued)

PRIMARY MOLYBDENUM AND RHENIUM SUBCATEGORY
ACID PLANT BLOWDOWN
RAW WASTEWATER SAMPLING DATA

Pollutant	Stream Code	Sample Type†	Concentrations (mg/l) Source	Day 1	Day 2	Day 3
Nonconventional Pollutants (Continued)						
iron	781	6	0.230	40.3	98.2	19.2
magnesium	781	6	15.6	17.4	46.8	21.4
manganese	781	6	0.090	1.20	1.26	0.60
molybdenum	781	6	<0.02	1.69	8.38	2.68
phenolics	781	6	<0.005	<0.005	NA	NA
phosphate	781	6	5	12	NA	20
sodium	781	6	17	25.8	17	4.25
sulfate	781	6	75	45,000	NA	36,000
tin	781	6	0.321	<0.200	<0.200	3.29
titanium	781	6	<0.020	<0.020	0.036	0.020
total dissolved solids (TDS)	781	6	430	55,300	NA	8,600
total organic carbon (TOC)	781	6	<1	13	NA	110
total solids (TS)	781	6	500	56,000	NA	36,000
vanadium	781	6	<0.010	<0.010	<0.010	<0.010
yttrium	781	6	0.056	0.057	0.15	0.075

Table V-6 (Continued)

PRIMARY MOLYBDENUM AND RHENIUM SUBCATEGORY
ACID PLANT BLOWDOWN
RAW WASTEWATER SAMPLING DATA

Pollutant	Stream Code	Sample Type†	Concentrations (mg/l) Source	Day 1	Day 2	Day 3
Conventional Pollutants (Continued)						
oil and grease	781	1	<1	7.7	NA	NA
total suspended solids (TSS)	781	6	3	87	NA	38
pH (standard units)	781	6	6.00	1.20	NA	1.24

†Sample Type Code:
1 - One-time grab
2 - Manual composite during intermittent process operation
3 - 8-hour manual composite
4 - 8-hour automatic composite
5 - 24-hour manual composite
6 - 24-hour automatic composite

NA - Not analyzed.

PRIMARY MOLYBDENUM AND RHENIUM SUBCATEGORY
ACID PLANT BLOWDOWN (DUPLICATE)
RAW WASTEWATER SAMPLING DATA

Pollutant	Stream Code	Sample Type†	Concentrations (mg/l) Source	Day 1
Toxic Pollutants				
114. antimony	781	6	<0.0020	0.008
115. arsenic	781	6	<0.0050	1.03
117. beryllium	781	6	<0.01	<0.01
118. cadmium	781	6	<0.05	<0.05
119. chromium (total)	781	6	<0.1	12.8
120. copper	781	6	<0.01	0.080
121. cyanide (total)	781	1	0.29	0.033
122. lead	781	6	<0.1	1.480
123. mercury	781	6	<0.0010	0.0088
124. nickel	781	6	<0.1	4.52
125. selenium	781	6	<0.01	0.786
126. silver	781	6	<0.002	0.002

Table V-6 (Continued)

PRIMARY MOLYBDENUM AND RHENIUM SUBCATEGORY
ACID PLANT BLOWDOWN (DUPLICATE)
RAW WASTEWATER SAMPLING DATA

Pollutant	Stream Code	Sample Type†	Concentrations (mg/l) Source	Day 1
Toxic Pollutants (Continued)				
127. thallium	781	6	<0.005	<0.005
128. zinc	781	6	<0.050	0.050
Nonconventional Pollutants				
acidity	781	6	<1	19,000
alkalinity	781	6	200	<1
aluminum	781	6	0.037	1.76
ammonia nitrogen	781	6	0.75	1.28
barium	781	6	0.20	0.098
boron	781	6	<0.100	3.68
calcium	781	6	63.5	72
chemical oxygen demand (COD)	781	6	<1	86
chloride	781	6	20	53
cobalt	781	6	<0.1	<0.1
fluoride	781	6	0.68	720

Table V-6 (Continued)

PRIMARY MOLYBDENUM AND RHENIUM SUBCATEGORY
ACID PLANT BLOWDOWN (DUPLICATE)
RAW WASTEWATER SAMPLING DATA

Pollutant	Stream Code	Sample Type†	Concentrations (mg/l) Source	Day 1
Nonconventional Pollutants (Continued)				
iron	781	6	0.230	35.8
magnesium	781	6	15.6	19.6
manganese	781	6	0.090	1.3
molybdenum	781	6	<0.02	1.86
phenolics	781	6	<0.005	<0.005
phosphate	781	6	5	5.2
sodium	781	6	17	19
sulfate	781	6	75	48,000
tin	781	6	<0.2	<0.2
titanium	781	6	<0.02	<0.02
total dissolved solids (TDS)	781	6	430	NR
total organic carbon (TOC)	781	6	<1	15
total solids (TS)	781	6	500	52,000
vanadium	781	6	<0.01	<0.01
yttrium	781	6	0.056	0.064

Table V-6 (Continued)

PRIMARY MOLYBDENUM AND RHENIUM SUBCATEGORY
ACID PLANT BLOWDOWN (DUPLICATE)
RAW WASTEWATER SAMPLING DATA

Pollutant	Stream Code	Sample Type†	Concentrations (mg/l) Source	Day 1
Conventional Pollutants				
oil and grease	781	1	<1	43
total suspended solids (TSS)	781	6	3	61
pH (standard units)	781	6	6.00	0.72

†Sample Type Code:
1 - One-time grab
2 - Manual composite during intermittent process operation
3 - 8-hour manual composite
4 - 8-hour automatic composite
5 - 24-hour manual composite
6 - 24-hour automatic composite

NA - Not analyzed.

Table V-7

PRIMARY MOLYBDENUM AND RHENIUM SUBCATEGORY
H_2 REDUCTION FURNACE SCRUBBER
RAW WASTEWATER SAMPLING DATA

Pollutant	Stream Code	Sample Type†	Concentrations (mg/l) Source	Day 1	Day 2	Day 3
Toxic Pollutants						
114. antimony	55	1	0.023	<0.001	0.024	0.002
115. arsenic	55	1	0.001	0.006	0.024	0.002
117. beryllium	55	1	<0.001	<0.001	0.005	<0.001
118. cadmium	55	1	<0.001	<0.001	<0.001	<0.001
119. chromium (total)	55	1	0.018	0.005	0.006	0.001
120. copper	55	1	0.070	0.64	0.54	0.004
121. cyanide (total)	55	1	0.009	0.01	0.01	0.01
122. lead	55	1	0.003	0.026	0.17	<0.001
123. mercury	55	1	<0.0002	<0.0002	<0.0002	<0.0002
124. nickel	55	1	0.17	2.8	0.66	0.024
125. selenium	55	1	<0.001	<0.001	<0.001	0.001
126. silver	55	1	0.008	0.014	0.001	<0.001

Table V-7 (Continued)

PRIMARY MOLYBDENUM AND RHENIUM SUBCATEGORY
H_2 REDUCTION FURNACE SCRUBBER
RAW WASTEWATER SAMPLING DATA

Pollutant	Stream Code	Sample Type†	Concentrations (mg/l) Source	Day 1	Day 2	Day 3
Toxic Pollutants (Continued)						
127. thallium	55	1	<0.001	<0.001	<0.001	<0.001
128. zinc	55	1	420	0.58	0.63	0.51
Nonconventional Pollutants						
Alkalinity	55	1	2.8	120	120	120
Ammonia Nitrogen	55	1	0.07	3.3	11	14
Calcium	55	1	0.36	53	29	
Chloride	55	1	<1			37
Magnesium	55	1	0.009	2.7	2.7	
Phenolics	55	1	<0.001	0.005	0.004	<0.001
Sulfate	55	1	2	25	95	23
Total Dissolved Solids (TDS)	55	1	<10	310	350	
Total Solids (TS)	55	1	16	310	350	

Table V-7 (Continued)

PRIMARY MOLYBDENUM AND RHENIUM SUBCATEGORY
H_2 REDUCTION FURNACE SCRUBBER
RAW WASTEWATER SAMPLING DATA

Pollutant	Stream Code	Sample Type†	Concentrations (mg/l) Source	Day 1	Day 2	Day 3
Conventional Pollutants						
Oil and Grease	55	1	11	24		
Total Suspended Solids (TSS)	55	1	<4	<4	<4	
pH (standard units)	55	1	7.1	8.8	8.2	

†Sample Type Code:
1 - One-time grab
2 - Manual composite during intermittent process operation
3 - 8-hour manual composite
4 - 8-hour automatic composite
5 - 24-hour manual composite
6 - 24-hour automatic composite
A - Anticipated quality if new process implemented.

(a),(b),(c) Reported together

Table V-8

PRIMARY MOLYBDENUM AND RHENIUM SUBCATEGORY
MOLYBDIC OXIDE LEACHATE
RAW WASTEWATER SAMPLING DATA

Pollutant	Stream Code	Sample Type†	Concentrations (mg/l) Source	Day 1	Day 2	Day 3
Toxic Pollutants						
114. antimony	001	1	N.A.	<0.03		
115. arsenic	001	1	N.A.	0.48		
118. cadmium	001	1	N.A.	0.71		
119. chromium (total)	001	1	N.A.	1.4		
120. copper	001	1	N.A.	130		
122. lead	001	1	N.A.	110		
123. mercury	001	1	N.A.	<0.0002		
124. nickel	001	1	N.A.	10		
125. selenium	001	1	N.A.	<0.002		
126. silver	001	1	N.A.	<0.2		
128. zinc	001	1	N.A.	120		
Nonconventional Pollutants						
Acidity	001	1	N.A.	>1,000		
Alkalinity	55	1	N.A.	<1		

Table V-8 (Continued)

PRIMARY MOLYBDENUM AND RHENIUM SUBCATEGORY
MOLYBDIC OXIDE LEACHATE
RAW WASTEWATER SAMPLING DATA

Pollutant	Stream Code	Sample Type†	Concentrations (mg/l) Source	Day 1	Day 2	Day 3
Nonconventional Pollutants (Continued)						
Ammonia Nitrogen	001	1	N.A.	3,400		
Barium	001	1	N.A.	3.3		
Chemical Oxygen Demand (COD)	001	1	N.A.	200		
Chloride	001	1	N.A.	16,000		
Fluoride	001	1	N.A.	42		
Iron	001	1	N.A.	2,500		
Manganese	001	1	N.A.	19		
Molybdenum	001	1	N.A.	440		
Phosphate	001	1	N.A.	0.16		
Sulfate	001	1	N.A.	170		
Total Dissolved Solids (TDS)	001	1	N.A.	44,600		
Total Organic Carbon (TOC)	001	1	N.A.	3		
Total Solids (TS)	001	1	N.A.	46,000		

Table V-8 (Continued)

PRIMARY MOLYBDENUM AND RHENIUM SUBCATEGORY
MOLYBDIC OXIDE LEACHATE
RAW WASTEWATER SAMPLING DATA

Pollutant	Stream Code	Sample Type†	Concentrations (mg/l) Source	Day 1	Day 2	Day 3
Conventional Pollutants						
Total Suspended Solids (TSS)	001	1	N.A.	82		
pH (standard units)	001	1	N.A.	<2		

†Sample Type Code:
1 - One-time grab
2 - Manual composite during intermittent process operation
3 - 8-hour manual composite
4 - 8-hour automatic composite
5 - 24-hour manual composite
6 - 24-hour automatic composite
A - Anticipated quality if new process implemented.

Table V-9

PRIMARY MOLYBDENUM AND RHENIUM SUBCATEGORY
ACID PLANT BLOWDOWN AFTER SULFIDE PRECIPITATION AND FILTRATION
WASTEWATER SAMPLING DATA

Pollutant	Stream Code	Sample Type†	Concentrations (mg/l) Source	Day 1	Day 2	Day 3
Toxic Pollutants						
68. di-n-butyl phthalate	782	6	0.00172			
114. antimony	782	6	<0.0021	0.012	0.014	0.003
115. arsenic	782	6	<0.005	0.066	0.472	0.348
117. beryllium	782	6	<0.010	<0.010	<0.010	<0.010
118. cadmium	782	6	<0.050	<0.050	<0.050	<0.050
119. chromium (total)	782	6	<0.100	1.62	0.950	0.580
120. copper	782	6	<0.010	0.020	0.026	0.030
121. cyanide (total)	782	1	0.29	0.081	NA	NA
122. lead	782	6	<0.100	1.07	1.58	1.29
123. mercury	782	6	<0.0010	<0.0010	<0.0010	<0.0010
124. nickel	782	6	<0.100	1.02	0.550	0.440
125. selenium	782	6	<0.010	0.015	0.132	0.050
126. silver	782	6	<0.002	<0.002	<0.002	<0.002

Table V-9 (Continued)

PRIMARY MOLYBDENUM AND RHENIUM SUBCATEGORY
ACID PLANT BLOWDOWN AFTER SULFIDE PRECIPITATION AND FILTRATION
WASTEWATER SAMPLING DATA

Pollutant	Stream Code	Sample Type†	Concentrations (mg/l) Source	Day 1	Day 2	Day 3
Toxic Pollutants (Continued)						
127. thallium	782	6	<0.005	<0.005	<0.005	<0.005
128. zinc	782	6	<0.050	<0.050	<0.050	<0.050
Nonconventional Pollutants						
acidity	782	6	<1	1,000	1,500	965
alkalinity	782	6	200	<1	<1	<1
aluminum	782	6	0.037	2.01	1.08	0.110
ammonia nitrogen	782	6	0.75	1.24	1.31	1.1
barium	782	6	0.20	0.085	0.10	0.80
boron	782	6	<0.100	4.77	2.56	0.170
calcium	782	6	63.5	63	61.5	78
chemical oxygen demand (COD)	782	6	<1	230	97	480
chloride	782	6	20	510	690	87
cobalt	782	6	<0.100	<0.100	<0.100	<0.100
fluoride	782	6	0.68	1,050	310	51

Table V-9 (Continued)

PRIMARY MOLYBDENUM AND RHENIUM SUBCATEGORY
ACID PLANT BLOWDOWN AFTER SULFIDE PRECIPITATION AND FILTRATION
WASTEWATER SAMPLING DATA

Pollutant	Stream Code	Sample Type†	Concentrations (mg/l) Source	Day 1	Day 2	Day 3
Nonconventional Pollutants (Continued)						
iron	782	6	0.230	9.90	7.20	6.60
magnesium	782	6	15.6	17.8	17.5	23.6
manganese	782	6	0.090	0.40	0.24	0.24
molybdenum	782	6	<0.0200	1.70	4.22	1.95
phenolics	782	6	<0.005	0.089	NA	NA
phosphate	782	6	5	6.0	<4	9.2
sodium	782	6	17	19	11	27
sulfate	782	6	75	45,000	45,000	39,000
tin	782	6	0.321	<0.200	<0.200	<0.200
titanium	782	6	<0.020	<0.020	<0.020	<0.020
total dissolved solids (TDS)	782	6	4.30	2,940	27,600	8,000
total organic carbon (TOC)	782	6	<1	15	65	110
total solids (TS)	782	6	500	55,000	66,000	37,000
vanadium	782	6	<0.010	<0.010	<0.010	<0.010
yttrium	782	6	0.056	0.064	0.070	0.076

Table V-9 (Continued)

PRIMARY MOLYBDENUM AND RHENIUM SUBCATEGORY
ACID PLANT BLOWDOWN AFTER SULFIDE PRECIPITATION AND FILTRATION
WASTEWATER SAMPLING DATA

Pollutant	Stream Code	Sample Type†	Concentrations (mg/l) Source	Day 1	Day 2	Day 3
Conventional Pollutants (Continued)						
oil and grease	782	1	<1	12	NA	NA
total suspended solids (TSS)	782	6	3	10	5	1
pH (standard units)	782	6	6.00	1.05	1.07	0.078

†Sample Type Code:
1 - One-time grab
2 - Manual composite during intermittent process operation
3 - 8-hour manual composite
4 - 8-hour automatic composite
5 - 24-hour manual composite
6 - 24-hour automatic composite

NA - Not analyzed.

Table V-10

PRIMARY MOLYBDENUM AND RHENIUM SUBCATEGORY
ACID PLANT BLOWDOWN
COMMINGLED WASTEWATER SAMPLING DATA

Pollutant	Stream Code	Sample Type†	Concentrations (mg/l) Source	Day 1	Day 2	Day 3
Toxic Pollutants						
65. phenol	67	6		0.0101	0.00806	0.0149
66. bis(2-ethylhexyl) phthalate	67	6		0.00382		
68. di-n-octyl phthalate	67	6	0.00172	0.00382	0.00246	
114. antimony	67	6	<0.002	<0.002	<0.002	<0.002
115. arsenic	67	6	<0.0050	0.058	0.324	0.076
117. beryllium	67	6	<0.010	<0.010	<0.010	<0.010
118. cadmium	67	6	<0.050	<0.050	<0.050	<0.050
119. chromium (total)	67	6	<0.10	0.12	0.22	0.10
120. copper	67	6	<0.010	0.015	<0.010	<0.010
121. cyanide (total)	67	1	0.29	0.082		
122. lead	67	6	<0.100	<0.100	<0.100	<0.100
123. mercury	67	6	<0.0010	<0.0010	<0.0010	<0.0010
124. nickel	67	6	<0.0100	0.202	0.100	0.100

Table V-10 (Continued)

PRIMARY MOLYBDENUM AND RHENIUM SUBCATEGORY
ACID PLANT BLOWDOWN
COMMINGLED WASTEWATER SAMPLING DATA

Pollutant	Stream Code	Sample Type†	Concentrations (mg/l) Source	Day 1	Day 2	Day 3
Toxic Pollutants						
125. selenium	67	6	<0.010	0.528	0.0160	0.050
126. silver	67	6	<0.002	<0.002	0.002	<0.002
127. thallium	67	6	<0.005	<0.005	<0.005	<0.005
128. zinc	67	6	<0.050	0.11	0.30	0.18
Nonconventional Pollutants						
acidity	67	6	<1	NA	NA	NA
alkalinity	67	6	200	NA	NA	NA
aluminum	67	6	0.037	2.5	0.38	3.5
ammonia nitrogen	67	6	0.75	NA	740	660
barium	67	6	0.20	0.10	0.060	0.0120
boron	67	6	<0.10	0.54	<0.10	0.44
calcium	67	6	63.5	620	839	645
chemical oxygen demand (COD)	67	6	<1	NA	150	100

Table V-10 (Continued)

PRIMARY MOLYBDENUM AND RHENIUM SUBCATEGORY
ACID PLANT BLOWDOWN
COMMINGLED WASTEWATER SAMPLING DATA

Pollutant	Stream Code	Sample Type†	Concentrations (mg/l) Source	Day 1	Day 2	Day 3
Nonconventional Pollutants (Continued)						
chloride	67	6	20	NA	NA	NA
cobalt	67	6	<0.10	<0.10	<0.10	<0.10
fluoride	67	6	0.68	180	0.185	120
iron	67	6	0.230	10.0	18.8	31.2
magnesium	67	6	15.6	11.1	32.5	33.2
manganese	67	6	0.0900	1.89	1.24	1.19
molybdenum	67	6	<0.020	0.30	0.35	1.00
phenolics	67	6	<0.005	0.019	0.013	<0.005
phosphate	67	6	5	NA	<4	<8
sodium	67	6	17	2,750	5,020	5,500
sulfate	67	6	75	NA		
tin	67	6	0.321	<0.200	<0.200	<0.200
titanium	67	6	<0.020	0.042	<0.020	0.090
total dissolved solids (TDS)	67	6	430	NA	NA	NA

Table V-10 (Continued)

PRIMARY MOLYBDENUM AND RHENIUM SUBCATEGORY
ACID PLANT BLOWDOWN
COMMINGLED WASTEWATER SAMPLING DATA

Pollutant	Stream Code	Sample Type†	Concentrations (mg/l) Source	Day 1	Day 2	Day 3
Nonconventional Pollutants (Continued)						
total organic carbon (TOC)	67	6	<1	NA	30	38
total solids (TS)	67	6	500	NA	NA	NA
vanadium	67	6	<0.010	<0.10	<0.10	<0.10
yttrium	67	6	0.056	0.026	0.088	0.13
Conventional Pollutants						
oil and grease	67	1	<1	9.0	<1	<1
total suspended solids (TSS)	67	6	3	NA*	NA*	NA*
pH (standard units)	67	6	6.00	NA	NA	NA

†Sample Type Code:
1 - One-time grab
2 - Manual composite during intermittent process operation
3 - 8-hour manual composite
4 - 8-hour automatic composite
5 - 24-hour manual composite
6 - 24-hour automatic composite

NA - Not analyzed.

*TSS was not analyzed because the sample was taken from the lime pit. Lime had already been added to the wastewater.

Table V-11

PRIMARY MOLYBDENUM AND RHENIUM SUBCATEGORY
ACID PLANT BLOWDOWN
TREATED WASTEWATER SAMPLING DATA

Pollutant	Stream Code	Sample Type†	Concentrations (mg/l) Source	Day 1	Day 2	Day 3
Toxic Pollutants						
54. isophorone	68	6			0.0414	
66. bis(2-ethylhexyl) phthalate	68	6			0.208	
68. di-n-butyl phthalate	68	6	0.00172	0.00246	0.0032	0.00394
70. diethyl phthalate	68	6		0.00254		
114. antimony	68	6	<0.002	<0.002	<0.002	<0.002
115. arsenic	68	6	<0.0050	0.019	0.446	0.022
117. beryllium	68	6	<0.01	<0.01	<0.01	<0.01
118. cadmium	68	6	<0.05	<0.05	0.05	0.05
119. chromium (total)	68	6	<0.1	<0.1	<0.1	<0.1
120. copper	68	6	<0.010	<0.01	0.015	0.013
121. cyanide (total)	68	1	0.29	0.23	NA	NA
122. lead	68	6	<0.1	<0.1	<0.1	<0.1
123. mercury	68	6	<0.001	<0.001	<0.001	<0.001
124. nickel	68	6	<0.10	<0.10	<0.10	0.15

Table V-11 (Continued)

PRIMARY MOLYBDENUM AND RHENIUM SUBCATEGORY
ACID PLANT BLOWDOWN
TREATED WASTEWATER SAMPLING DATA

Pollutant	Stream Code	Sample Type†	Concentrations (mg/l) Source	Day 1	Day 2	Day 3
Toxic Pollutants (Continued)						
125. selenium	68	6	<0.010	0.044	0.059	0.085
126. silver	68	6	<0.002	<0.002	<0.002	0.006
127. thallium	68	6	<0.005	<0.005	0.005	0.005
128. zinc	68	6	<0.05	0.05	0.05	0.05
Nonconventional Pollutants						
acidity	68	6	<1	<1	<1	<1
alkalinity	68	6	200	164	160	160
aluminum	68	6	0.037	0.13	0.29	0.13
ammonia nitrogen	68	6	0.75	460	390	650
barium	68	6	0.20	0.075	0.080	0.040
boron	68	6	<0.10	0.24	0.30	0.26
calcium	68	6	63.5	347	328	122
chemical oxygen demand (COD)	68	6	<1	120	67	90
chloride	68	6	20	140	140	130

PRIMARY MOLYBDENUM AND RHENIUM SUBCATEGORY
ACID PLANT BLOWDOWN
TREATED WASTEWATER SAMPLING DATA

Pollutant	Stream Code	Sample Type†	Concentrations (mg/l) Source	Day 1	Day 2	Day 3
Nonconventional Pollutants (Continued)						
cobalt	68	6	<0.1	<0.1	<0.1	<0.1
fluoride	68	6	0.68	47	135	52
iron	68	6	0.23	0.11	0.14	0.14
magnesium	68	6	15.6	17.9	13.8	18.6
manganese	68	6	0.090	0.63	0.43	0.50
molybdenum	68	6	<0.0200	0.890	1.79	1.54
phenolics	68	6	<0.005	<0.005	<0.005	<0.005
phosphate	68	6	5	8.0	<4	<4
sodium	68	6	17	2,450	3,000	2,850
sulfate	68	6	75	12,000	12,000	12,000
tin	68	6	0.321	<0.200	<0.200	<0.200
titanium	68	6	<0.02	<0.02	<0.02	<0.02
total organic carbon (TOC)	68	6	<1	6.3	5.6	5.5

Table V-11 (Continued)

PRIMARY MOLYBDENUM AND RHENIUM SUBCATEGORY
ACID PLANT BLOWDOWN
TREATED WASTEWATER SAMPLING DATA

Pollutant	Stream Code	Sample Type†	Concentrations (mg/l) Source	Day 1	Day 2	Day 3
Nonconventional Pollutants (Continued)						
total solids (TS)	68	6	500	14,000	14,500	14,000
vanadium	68	6	<0.01	<0.1	<0.1	<0.1
yttrium	68	6	0.056	0.10	0.043	0.077
Conventional Pollutants						
oil and grease	68	1	<1	2.4	1.5	<1
total suspended solids (TSS)	68	6	3	6	18	7
pH (standard units)	68	6	6.00	8.30	8.11	8.29

†Sample Type Code:
1 - One-time grab
2 - Manual composite during intermittent process operation
3 - 8-hour manual composite
4 - 8-hour automatic composite
5 - 24-hour manual composite
6 - 24-hour automatic composite

NA - Not analyzed.

TABLE V-12

PRIMARY MOLYBDENUM AND RHENIUM SAMPLING DATA
MOLYBDIC OXIDE LEACHATE
RAW WASTEWATER SELF-SAMPLING DATA

Pollutant	Concentration (mg/l)
115. arsenic	0.218
117. beryllium	<0.050
118. cadmium	0.180
119. chromium	1.380
120. copper	125.000
122. lead	9.490
124. nickel	1.900
125. selenium	<0.010
128. zinc	7.500
Nonconventional Pollutants	
Aluminum	370.000
Ammonia - N	22000.000
Cobalt	<0.500
Iron	880.000
Fluoride	0.020
Manganese	11.000
Molybdenum	206.000
Tin	8.000
Titanium	6.400
Vanadium	<1.000

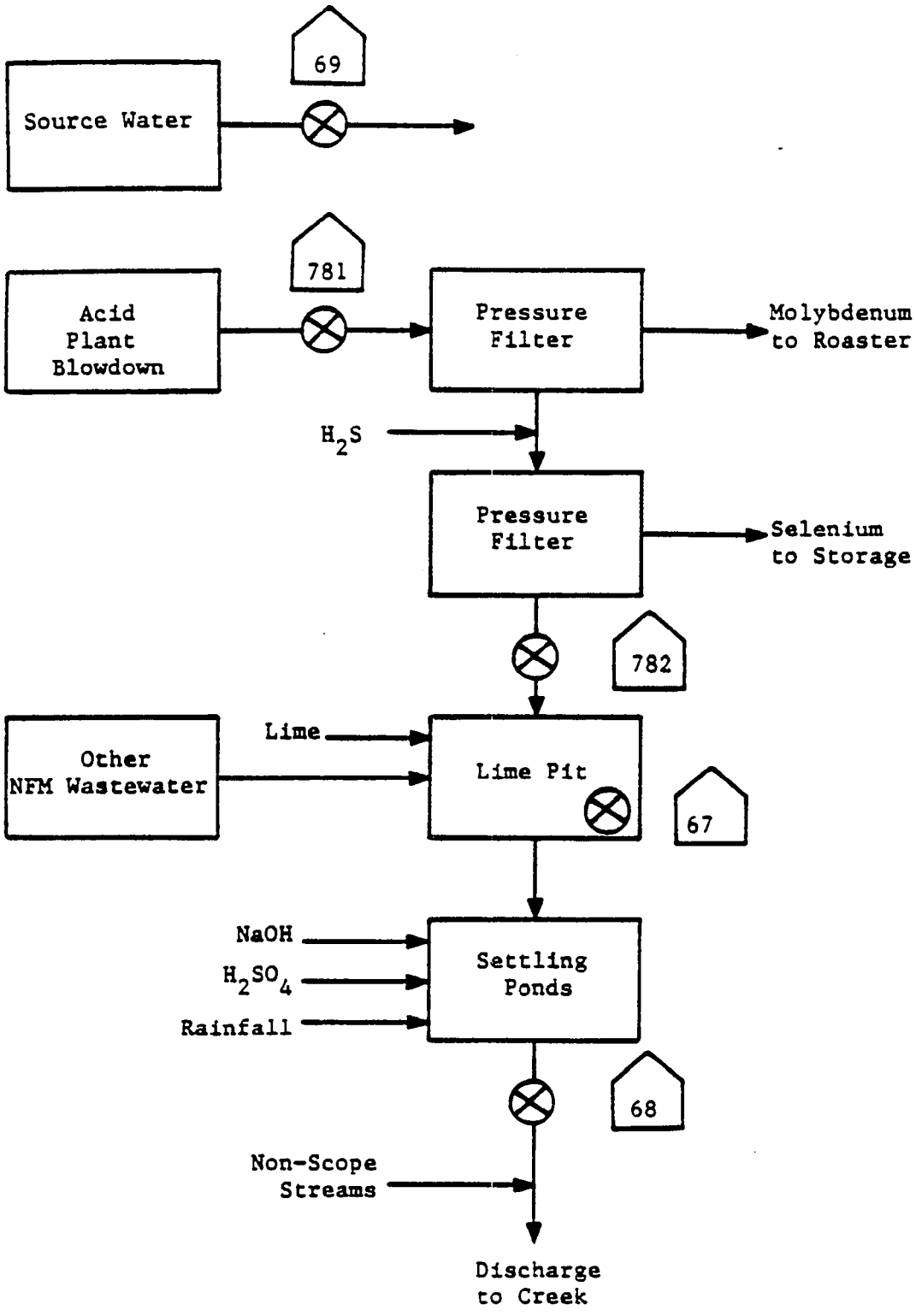

Figure V-1

SAMPLING SITES AT PRIMARY MOLYBDENUM PLANT B

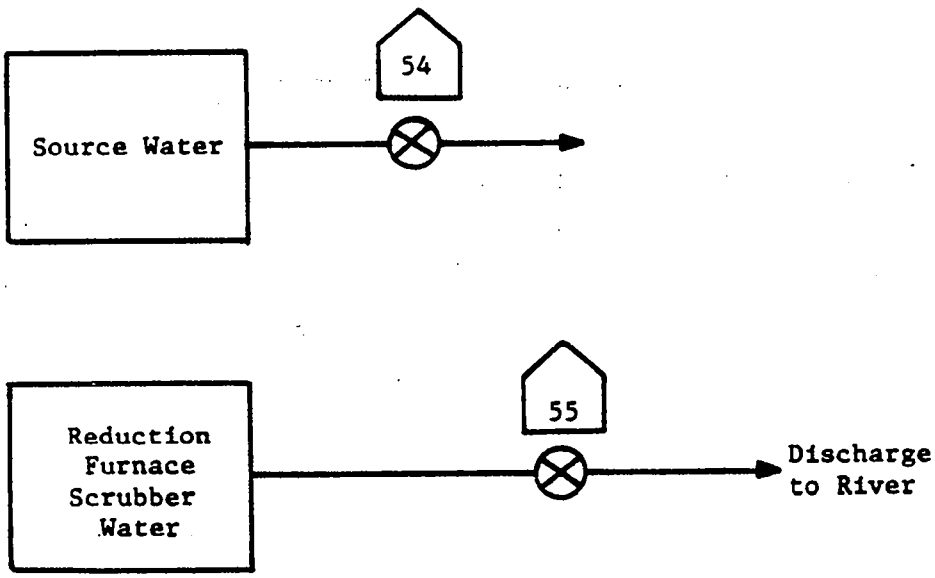

Figure V-2

SAMPLING SITES AT PRIMARY MOLYBDENUM PLANT C

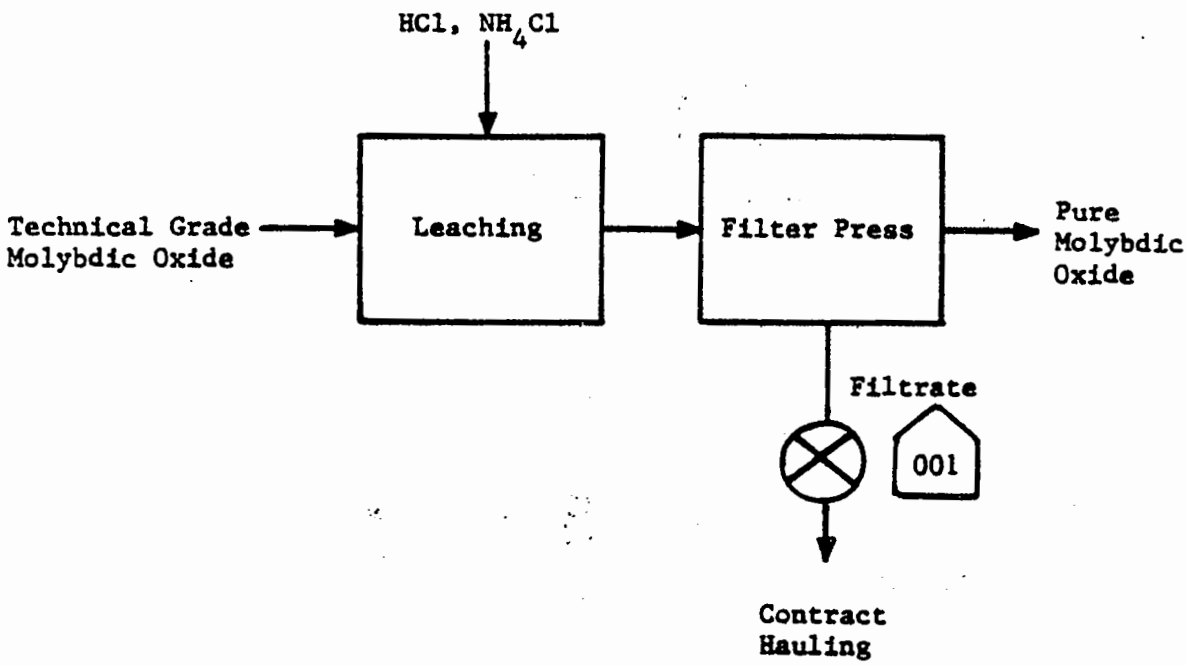

Figure V-3

SAMPLING SITES AT PRIMARY MOLYBDENUM PLANT D

SECTION VI

SELECTION OF POLLUTANT PARAMETERS

Section V of this supplement presented data from primary molybdenum and rhenium plant sampling visits and subsequent chemical analyses. This section examines that data and discusses the selection or exclusion of pollutants for potential limitation.

Raw wastewater characteristics data obtained following proposal were not included in the pollutant selection analysis. The data obtained following proposal were useful in supporting the proposed pollutant selection because the priority pollutants selected for further consideration at proposal were all detected in excess of their treatable concentration in the new data, with the exception of selenium. In addition, the new data show the two conventional pollutant parameters selected for limitation in this subcategory (total suspended solids and pH) and the three nonconventional pollutants analyzed for and selected for limitation (ammonia, fluoride and molybdenum), in excess of their treatable concentrations.

The discussion that follows presents and briefly discusses the selection of conventional and nonconventional pollutants for effluent limitations. Also described is the analysis that was performed to select or exclude priority pollutants for further consideration for limitations and standards. Pollutants will be considered for limitation if they are present in concentrations treatable by the technologies considered in this analysis. The treatable concentrations used for the priority metals were the long-term performance values achievable by chemical precipitation, sedimentation, and filtration. The treatable concentrations used for the priority organics were the long-term performance values achievable by carbon adsorption.

CONVENTIONAL AND NONCONVENTIONAL POLLUTANT PARAMETERS

This study examined samples from the primary molybdenum and rhenium subcategory for three conventional pollutant parameters (oil and grease, total suspended solids, and pH) and the nonconventional pollutant parameters ammonia, fluoride, and molybdenum.

On March 18, 1984, the Agency published a Notice of Data Availability which stated that EPA was considering regulating the nonconventional metal pollutant rhenium in this subcategory. For promulgation, EPA has decided not to regulate rhenium because it will be effectively controlled by the limitations developed for the selected priority metal pollutants and the nonconventional metal pollutant molybdenum.

CONVENTIONAL AND NONCONVENTIONAL POLLUTANT PARAMETERS SELECTED

The conventional and nonconventional pollutants or pollutant parameters selected for limitation in this subcategory are:

ammonia
fluoride
molybdenum
total suspended solids (TSS)
pH

Treatable levels of ammonia are known to be present in wastewaters resulting from ammonium molybdate production. Data obtained during a post proposal sampling episode at a primary molybdenum plant show an ammonia concentration in molybdic oxide leachate of 3,400 mg/l. This value is in excess of the 32.2 mg/l considered achievable by treatment technology. Ammonia is therefore selected for limitation in this subcategory.

At proposal, the Agency stated that it was considering limiting fluoride in this subcategory, and solicited comments from industry. Following review of these comments. the Agency has decided to limit fluoride based on its presence in the raw wastewater from this subcategory. Effluent limitations for fluoride are based on treatment effectiveness concentrations of 19.9 mg/l for the monthly average and 35 mg/l for the daily maximum.

Molybdenum was found in four of four raw waste samples ranging from 1.69 mg/l to 29 mg/l. In addition, post-proposal sampling data show molybdenum detected in molybdic oxide leachate at 440 mg/l. Because molybdenum was detected in excess of its treatable concentration, it is selected for limitation in this subcategory.

Total suspended solids (TSS) concentrations ranging from less than 1 to 87 mg/l were observed in the six raw waste samples analyzed for this study. Four of the concentrations are above the 2.6 mg/l treatable concentration. Most of the specific methods used to remove priority metals do so by converting these metals to precipitates, and these metal-containing precipitates should not be discharged. Meeting a limitation on total suspended solids helps ensure that removal of these precipitated toxic metals has been effective. For these reasons, total suspended solids are selected for limitation in this subcategory.

The six pH values observed during this study ranged from 0.72 to 9.6. Three of the six values were equal to or less than 1.24. Many deleterious effects are caused by extreme pH values or rapid changes in pH. Also, effective removal of toxic metals by precipitation requires careful control of pH. Since pH control within the desirable limits is readily attainable by available treatment, pH is selected for limitation in this subcategory

TOXIC PRIORITY POLLUTANTS

The frequency of occurrence of the priority pollutants in the raw wastewater samples taken is presented in Table VI-1 (page 3422). Table VI-1 is based on the raw wastewater data from streams 55 and 781 (see Section V) and data contained in the confidential record. It is not based on data received after proposal. These data provide the basis for the categorization of specific pollutants, as discussed below. Treatment plant samples were not considered in the frequency count.

TOXIC POLLUTANTS NEVER DETECTED

The toxic pollutants listed in Table VI-2 (page 3426) were not detected in any raw wastewater samples from this subcategory. Therefore, they are not selected for consideration in establishing limitations.

TOXIC POLLUTANTS NEVER FOUND ABOVE THEIR ANALYTICAL QUANTIFICATION CONCENTRATION

The toxic pollutants listed below were never found above their analytical quantification concentration in any raw wastewater samples from this subcategory; therefore, they are not selected for consideration in establishing limitations.

44. methylene chloride
104. gamma-BHC
114. antimony
127. thallium

TOXIC POLLUTANTS PRESENT BELOW CONCENTRATIONS ACHIEVABLE BY TREATMENT

The pollutants listed below are not selected for consideration in establishing limitations because they were not found in any raw wastewater samples from this subcategory above concentrations considered achievable by existing or available treatment technologies. These pollutants are discussed individually following the list.

117. beryllium
118. cadmium
121. cyanide
123. mercury

Beryllium was detected above quantification concentrations in three out of eight raw wastewater samples. All three values were 0.01 mg/l which is significantly below the concentration considered achievable by identified treatment technology (0.20 mg/l). Beryllium is therefore not selected for limitation.

Cadmium was detected above quantification concentrations in only one out of eight raw wastewater samples. The observed concentration is 0.040 mg/l, which is below the concentration

considered achievable by identified treatment technology (0.049 mg/l). Cadmium is therefore not selected for limitation.

Cyanide was detected above quantification concentrations in two out of six raw wastewater samples. The observed concentrations were 0.032 mg/l and 0.033 mg/l. Because both of these values are below the concentration considered achievable by available treatment technology, 0.047 mg/l, cyanide is not selected for limitation.

Mercury was detected above quantification concentrations in three out of eight raw wastewater samples at concentrations of 0.0088 mg/l, 0.0180 mg/l, and 0.0045 mg/l. Because all three of these values are below the concentration considered achievable by identified treatment technology, mercury is not selected for regulation.

TOXIC POLLUTANTS DETECTED IN A SMALL NUMBER OF SOURCES

The following pollutant was not selected for limitation on the basis that it is detectable in the effluent from only a small number of sources within the subcategory and it is uniquely related to only those sources.

126. silver

Although this pollutant was not selected for limitation in establishing nationwide regulations, it may be appropriate, on a case-by-case basis, for the local permit authority to specify effluent limitations.

Silver was detected above the treatable level for silver (0.07 mg/l) in only one out of eight raw waste samples. The observed concentration is 0.18 mg/l. The silver concentrations observed in the other seven samples analyzed were all below the analytical quantification level. The Agency has no reason to believe that treatable silver concentrations should be present in primary molybdenum wastewaters and believes that this one value is not representative of the subcategory. Silver is therefore not selected for limitation.

TOXIC POLLUTANTS SELECTED FOR FURTHER CONSIDERATION IN ESTABLISHING LIMITATIONS AND STANDARDS

The toxic pollutants listed below are selected for further consideration in establishing limitations and standards for this subcategory. The priority pollutants selected for further consideration for limitation are each discussed following the list.

115. arsenic
119. chromium
120. copper
122. lead
124. nickel

125. selenium
128. zinc

Arsenic was detected above the level considered achievable by identified treatment technology (0.34 mg/l) in four out of eight raw wastewater samples. The treatable concentrations observed range from 0.517 mg/l to 12.4 mg/l. Arsenic may be present as an impurity in molybdenite ore concentrates. For these reasons, arsenic is selected for further consideration for limitation.

Chromium was detected above the level considered achievable by identified treatment technology (0.07 mg/l) in four out of eight raw wastewater samples. The treatable concentrations observed range from 3.08 mg/l to 13.0 mg/l. Because of the treatable levels observed and because chromium may be present as an impurity in molybdenite ore concentrates, chromium is selected for further consideration for limitation.

Copper was detected above its treatability level of 0.07 mg/l in three of eight raw wastewater samples. The treatable concentrations ranges in value from 0.54 mg/l to 2.92 mg/l. Copper is therefore selected for further consideration for limitation.

Lead was detected above the treatability level of 0.08 mg/l in six out of eight raw wastewater samples. The observed values ranged from 0.17 mg/l to 9.4 mg/l. Lead is therefore selected for further consideration for limitation.

Nickel was detected above the treatable level of 0.22 mg/l in six out of eight raw wastewater samples. The observed values ranged from 0.66 mg/l to 4.60 mg/l. Nickel is therefore selected for further consideration for limitation.

Selenium was detected above the level considered achievable by available technology in four out of eight raw wastewater samples. The treatable concentrations observed ranged from 0.784 to 61.2 mg/l. Because of the treatable concentrations observed and because selenium may be present as an impurity in the molybdenite ore concentrate, selenium is selected for further consideration for limitation.

Zinc detected above its treatable level of 0.23 mg/l in five out of eight raw wastewater samples. The observed values ranged from 0.51 to 8.2 mg/l. Zinc is therefore selected for further consideration for limitation.

Table VI-1

FREQUENCY OF OCCURRENCE OF PRIORITY POLLUTANTS
PRIMARY MOLYBDENUM AND RHENIUM SUBCATEGORY
RAW WASTEWATER

Pollutant	Analytical Quantification Concentration (mg/l)(a)	Treatable Concentration (mg/l)(b)	Number of Streams Analyzed	Number of Samples Analyzed	ND	Detected Below Quantification Concentration	Detected Below Treatable Concentration	Detected Above Treatable Concentration
1. acenaphthene	0.010	0.01	1	1	1			
2. acrolein	0.010	0.01	1	1	1			
3. acrylonitrile	0.010	0.01	1	1	1			
4. benzene	0.010	0.01	1	1	1			
5. benzidine	0.010	0.01	1	1	1			
6. carbon tetrachloride	0.010	0.01	1	1	1			
7. chlorobenzene	0.010	0.01	1	1	1			
8. 1,2,4-trichlorobenzene	0.010	0.01	1	1	1			
9. hexachlorobenzene	0.010	0.01	1	1	1			
10. 1,2-dichloroethane	0.010	0.01	1	1	1			
11. 1,1,1-trichloroethane	0.010	0.01	1	1	1			
12. hexachloroethane	0.010	0.01	1	1	1			
13. 1,1-dichloroethane	0.010	0.01	1	1	1			
14. 1,1,2-trichloroethane	0.010	0.01	1	1	1			
15. 1,1,2,2-tetrachloroethane	0.010	0.01	1	1	1			
16. chloroethane	0.010	0.01	1	1	1			
17. bis(chloromethyl) ether	0.010	0.01	1	1	1			
18. bis(2-chloroethyl) ether	0.010	0.01	1	1	1			
19. 2-chloroethyl vinyl ether	0.010	0.01	1	1	1			
20. 2-chloronaphthalene	0.010	0.01	1	1	1			
21. 2,4,6-trichlorophenol	0.010	0.01	1	1	1			
22. parechlorometa cresol	0.010	0.01	1	1	1			
23. chloroform	0.010	0.01	1	1	1			
24. 2-chlorophenol	0.010	0.01	1	1	1			
25. 1,2-dichlorobenzene	0.010	0.01	1	1	1			
26. 1,3-dichlorobenzene	0.010	0.01	1	1	1			
27. 1,4-dichlorobenzene	0.010	0.01	1	1	1			
28. 3,3'-dichlorobenzidine	0.010	0.01	1	1	1			
29. 1,1-dichloroethylene	0.010	0.01	1	1	1			
30. 1,2-trans-dichloroethylene	0.010	0.01	1	1	1			
31. 2,4-dichlorophenol	0.010	0.01	1	1	1			
32. 1,2-dichloropropane	0.010	0.01	1	1	1			
33. 1,3-dichloropropylene	0.010	0.01	1	1	1			
34. 2,4-dimethylphenol	0.010	0.01	1	1	1			

Table VI-1 (Continued)

FREQUENCY OF OCCURRENCE OF PRIORITY POLLUTANTS
PRIMARY MOLYBDENUM AND RHENIUM SUBCATEGORY
RAW WASTEWATER

Pollutant	Analytical Quantification Concentration (mg/l)(a)	Treatable Concentration (mg/l)(b)	Number of Streams Analyzed	Number of Samples Analyzed	ND	Detected Below Quantification Concentration	Detected Below Treatable Concentration	Detected Above Treatable Concentration
35. 2,4-dinitrotoluene	0.010	0.01	1	1	1			
36. 2,6-dinitrotoluene	0.010	0.01	1	1	1			
37. 1,2-diphenylhydrazine	0.010	0.01	1	1	1			
38. ethylbenzene	0.010	0.01	1	1	1			
39. fluoranthene	0.010	0.01	1	1	1			
40. 4-chlorophenyl phenyl ether	0.010	0.01	1	1	1			
41. 4-bromophenyl phenyl ether	0.010	0.01	1	1	1			
42. bis(2-chloroisopropyl) ether	0.010	0.01	1	1	1			
43. bis(2-chloroethoxy) methane	0.010	0.01	1	1	1			
44. methylene chloride	0.010	0.01	1	1				
45. methyl chloride	0.010	0.01	1	1	1			
46. methyl bromide	0.010	0.01	1	1	1			
47. bromoform	0.010	0.01	1	1	1			
48. dichlorobromomethane	0.010	0.01	1	1	1			
49. trichlorofluoromethane	0.010	0.01	1	1	1			
50. dichlorodifluoromethane	0.010	0.01	1	1	1			
51. chlorodibromomethane	0.010	0.01	1	1	1			
52. hexachlorobutadiene	0.010	0.01	1	1	1			
53. hexachlorocyclopentadiene	0.010	0.01	1	1	1			
54. isophorone	0.010	0.01	1	1	1			
55. naphthalene	0.010	0.01	1	1	1			
56. nitrobenzene	0.010	0.01	1	1	1			
57. 2-nitrophenol	0.010	0.01	1	1	1			
58. 4-nitrophenol	0.010	0.01	1	1	1			
59. 2,4-dinitrophenol	0.010	0.01	1	1	1			
60. 4,6-dinitro-o-cresol	0.010	0.01	1	1	1			
61. N-nitrosodimethylamine	0.010	0.01	1	1	1			
62. N-nitrosodiphenylamine	0.010	0.01	1	1	1			
63. N-nitrosodi-n-propylamine	0.010	0.01	1	1	1			
64. pentachlorophenol	0.010	0.01	1	1	1			
65. phenol	0.010	0.01	1	1	1			
66. bis(2-ethylhexyl) phthalate	0.010	0.01	1	1	1			
67. butyl benzyl phthalate	0.010	0.01	1	1	1			
68. di-n-butyl phthalate	0.010	0.01	1	1	1			

Table VI-1 (Continued)

FREQUENCY OF OCCURRENCE OF PRIORITY POLLUTANTS
PRIMARY MOLYBDENUM AND RHENIUM SUBCATEGORY
RAW WASTEWATER

Pollutant	Analytical Quantification Concentration (mg/l)(a)	Treatable Concentration (mg/l)(b)	Number of Streams Analyzed	Number of Samples Analyzed	ND	Detected Below Quantification Concentration	Detected Below Treatable Concentration	Detected Above Treatable Concentration
69. di-n-octyl phthalate	0.010	0.01	1	1	1			
70. diethyl phthalate	0.010	0.01	1	1	1			
71. dimethyl phthalate	0.010	0.01	1	1	1			
72. benzo(a)anthracene	0.010	0.01	1	1	1			
73. benzo(a)pyrene	0.010	0.01	1	1	1			
74. 3,4-benzofluoranthene	0.010	0.01	1	1	1			
75. benzo(k)fluoranthene	0.010	0.01	1	1	1			
76. chrysene	0.010	0.01	1	1	1			
77. acenaphthylene	0.010	0.01	1	1	1			
78. anthracene (c)	0.010	0.01	1	1	1			
79. benzo(ghi)perylene	0.010	0.01	1	1	1			
80. fluorene	0.010	0.01	1	1	1			
81. phenanthrene (c)	0.010	0.01	1	1	1			
82. dibenzo(a,h)anthracene	0.010	0.01	1	1	1			
83. indeno(1,2,3-cd)pyrene	0.010	0.01	1	1	1			
84. pyrene	0.010	0.01	1	1	1			
85. tetrachloroethylene	0.010	0.01	1	1	1			
86. toluene	0.010	0.01	1	1	1			
87. trichloroethylene	0.010	0.01	1	1	1			
88. vinyl chloride	0.010	0.01	1	1	1			
89. aldrin	0.005	0.01	1	1	1			
90. dieldrin	0.005	0.01	1	1	1			
91. chlordane	0.005	0.01	1	1	1			
92. 4,4'-DDT	0.005	0.01	1	1	1			
93. 4,4'-DDE	0.005	0.01	1	1	1			
94. 4,4'-DDD	0.005	0.01	1	1	1			
95. alpha-endosulfan	0.005	0.01	1	1	1			
96. beta-endosulfan	0.005	0.01	1	1	1			
97. endosulfan sulfate	0.005	0.01	1	1	1			
98. endrin	0.005	0.01	1	1	1			
99. endrin aldehyde	0.005	0.01	1	1	1			
100. heptachlor	0.005	0.01	1	1	1			
101. heptachlor epoxide	0.005	0.01	1	1	1			
102. alpha-BHC	0.005	0.01	1	1	1			
103. beta-BHC	0.005	0.01	1	1	1			

Table VI-1 (Continued)

FREQUENCY OF OCCURRENCE OF PRIORITY POLLUTANTS
PRIMARY MOLYBDENUM AND RHENIUM SUBCATEGORY
RAW WASTEWATER

Pollutant	Analytical Quantification Concentration (mg/l)(a)	Treatable Concentration (mg/l)(b)	Number of Streams Analyzed	Number of Samples Analyzed	ND	Detected Below Quantification Concentration	Detected Below Treatable Concentration	Detected Above Treatable Concentration
104. gamma-BHC	0.005	0.01	1	1		1		
105. delta-BHC	0.005	0.01	1	1	1			
106. PCB-1242 (d)	0.005	0.01	1	1	1			
107. PCB-1254 (d)	0.005	0.01	1	1	1			
108. PCB-1221 (d)	0.005	0.01	1	1	1			
109. PCB-1232 (e)	0.005	0.01	1	1	1			
110. PCB-1248 (e)	0.005	0.01	1	1	1			
111. PCB-1260 (e)	0.005	0.01	1	1	1			
112. PCB-1016 (e)	0.005	0.01	1	1	1			
113. toxaphene	0.005	0.01	1	1	1			
114. antimony	0.100	0.47	3	8		8		
115. arsenic	0.010	0.34	3	8		2	2	4
116. asbestos	10 MFL	10 MFL						
117. beryllium	0.010	0.20	3	8		5	3	
118. cadmium	0.002	0.049	3	8		7	1	
119. chromium	0.005	0.07	3	8		1	3	4
120. copper	0.009	0.39	3	8		1	4	3
121. cyanide (f)	0.02	0.047	3	6		4	2	
122. lead	0.020	0.08	3	8		1	1	6
123. mercury	0.0001	0.036	3	8		5	3	
124. nickel	0.005	0.22	3	8			2	6
125. selenium	0.01	0.20	3	8		4		4
126. silver	0.02	0.07	3	8		7		1
127. thallium	0.100	0.34	3	8		8		
128. zinc	0.050	0.23	3	8		2	1	5
129. 2,3,7,8-tetrachlorodibenzo-p-dioxin (TCDD)	Not Analyzed							

(a) Analytical quantification concentration was reported with the data (see Section IV).

(b) Treatable concentrations are based on performance of chemical precipitation, sedimentation, and filtration.

(c), (d), (e) Reported together.

(f) Analytical quantification concentration for EPA Method 335.2, Total Cyanide Methods for Chemical Analysis of Water and Wastes, EPA 600/4-79-020, March 1979.

TABLE VI-2

TOXIC POLLUTANTS NEVER DETECTED

1. acenaphthene
2. acrolein
3. acrylonitrile
4. benzene
5. benzidene
6. carbon tetrachloride (tetrachloromethane)
7. chlorobenzene
8. 1,2,4-trichlorobenzene
9. hexachlorobenzene
10. 1,2-dichloroethane
11. 1,1,1-trichloroethane
12. hexachloroethane
13. 1,1-dichloroethane
14. 1,1,2-trichloroethane
15. 1,1,2,2-tetrachloroethane
16. chloroethane
17. bis (chloromethyl) ether (DELETED)
18. bis (2-chloroethyl) ether
19. 2-chloroethyl vinyl ether (mixed)
20. 2-chloronaphthalene
21. 2,4,6-trichlorophenol
22. parachlorometa cresol
23. chloroform (trichloromethane)
24. 4-chlorophenol
25. 1,2-dichlorobenzene
26. 1,3-dichlorobenzene
27. 1,4-dichlorobenzene
28. 3,3,-dichlorobenzidine
29. 1,1-dichloroethylene
30. 1.2-trans-dichloroerhylene
31. 4,-dichlorophenol
32. 1,4-dichloropropane
33. 1,2-dichloropropylene (1,3-dichloropropene)
34. 2,4-dimethylphenol
35. 4,4-dinitrotoluene
36. 2,6-dinitrotoluene
37. 1,2-diphenylhydrazine
38. ethylbenzene
39. fluoranthene
40. 4-chlorophenol phenyl ether
41. 4-bromophenyl phenol ether
42. bis(2-chloroisopropyl) ether
43. bis(2-choroethoxyl) methane
45. methyl chloride (chloromethane)
46. methyl bromide (bromomethane)
47. bromoform (tribromomethane)
48. dichlorobromomethane
49. trichlorofluoromethane (DELETED)

TABLE VI-2 (Continued)

TOXIC POLLUTANTS NEVER DETECTED

50. dichlorodifluoromethane (DELETED)
51. chlorodibromomethane
52. hexachlorobutadiene
53. hexachlorocyclopentadiene
54. isophorone
55. naphthalene
56. nitrobenzene
57. 2-nitrophenol
58. 4-nitrophenol
59. 2,4-dinitrophenol
60. 2,6-dinitro-o-cresol
61. N-nitrosodimethylamine
62. N-nitrosodiphenylamine
63. N-nitrosodi-n-propylamine
64. pentachlorophenol
65. phenol
66. bis(2-ethylhexyl) phthalate
67. butyl benzyl phthalate
68. di-n-butyl phthalate
69. di-n-octyl phthalate
70. diethyl phthalate
71. dimethyl phthalate
72. benzo (a)anthracene (1,2-benzanthracene)
73. benzo (a)pyrene (3,4-benzopyrene)
74. 3,4-benzofluoranthene
75. benzo(k)fluoranthene (11,12-benzofluoranthene)
76. chrysene
77. acenaphthylene
78. anthracene
79. benzo(ghi)perylene (1,11-benzoperylene)
80. fluorene
81. phenanthrene
82. dibenzo (a,h)anthracene (1,2,4,6-dibenzanthracene)
83. indeno (1,2,3-cd)pyrene (w,e,-o-phenylenepyrene)
84. pyrene
85. tetrachloroethylene
86. toluene
87. trichloroethylene
88. vinyl chloride (chloroethylene)
89. aldrin
90. dieldrin
91. chlordane (technical mixture and metabolites)
92. 4-DDT
93. 4,4'
94. 4,4'-DDE(p,p'DDX)
95. 4,4'-DDD(p,p'TDE)
96. a-endosulfan-Alpha
97. b-endosulfan-Beta
98. endosulfan sulfate
99. endrin

TABLE VI-2 (Contiued)

TOXIC POLLUTANTS NEVER DETECTED

100. endrin aldehyde
101. heptachlor
102. heptachlor epoxide
103. a-BHC-Alpha
104. b-BHC-Beta
105. c-BHC-Delta
106. PCB-1242 (Arochlor 1242)
107. PCB-1254 (Arochlor 1244)
108. PCB-1221 (Arochlor 1221)
109. PCB-1232 (Arochlor 1242)
110. PCB-1248 (Arochlor 1248)
111. PCB-1260 (Arochlor 1260)
112. PCB-1016 (Arochlor 1016)
113. toxaphene
116. asbestos
129. 2,3,7,8-tetrachlorodibenzo-p-dioxin (TCDD)

SECTION VII

CONTROL AND TREATMENT TECHNOLOGIES

The preceding sections of this supplement discussed the sources, flows, and characteristics of the wastewaters generated in the primary molybdenum and rhenium subcategory. This section summarizes the description of these wastewaters and indicates the level of treatment which is currently practiced for each wastewater stream. Secondly, this section presents the control and treatment technology options which were examined by the Agency for possible application to the primary molybdenum and rhenium subcategory.

CURRENT CONTROL AND TREATMENT PRACTICES

This section presents a summary of the control and treatment technologies that are currently applied to each of the sources generating wastewater in this subcategory. As discussed in Section V, wastewater associated with the primary molybdenum and rhenium subcategory is characterized by the presence of the metal priority pollutants, ammonia, fluoride, molybdenum, and suspended solids. This analysis is supported by the raw (untreated) wastewater data in Section V. Generally, these pollutants are present in each of the waste streams at concentrations above treatability, and these waste streams are commonly combined for treatment. Construction of one wastewater treatment system for combined treatment allows plants to take advantage of economies of scale, and in some instances, to combine streams of differing alkalinity to reduce treatment chemical requirements. Three plants in this subcategory currently have combined wastewater treatment systems, consisting of chemical precipitation and sedimentation. One of these three plants also practices ammonia stripping. Three options have been selected for consideration for BPT, BAT, NSPS, and pretreatment standards in this subcategory, based on combined treatment of these compatible waste streams.

MOLYBDENUM SULFIDE LEACHATE

One of the facilities surveyed reported the practice of leaching and rinsing a portion of the molybdenite concentrate raw material prior to roasting. The concentrate is leached with nitric acid and rinsed with water to remove excess alkali. The leachate and rinsewater are then discharged as a wastewater stream. This waste stream has an acidic pH, and treatable levels of priority metals and suspended solids. The one facility which reported this waste stream discharges it to an on-site evaporation pond and contract hauls a portion of the contents of the pond periodically, thereby achieving zero discharge.

ROASTER SO_2 SCRUBBER

Four facilities reported the use of caustic scrubbers to control

SO_2 emissions from molybdenum sulfide roasting operations. The blowdown from the caustic scrubber has an alkaline pH, and treatable concentrations of suspended solids and priority metals. All four facilities reporting this waste stream achieve zero discharge through evaporation ponds, lagoon disposal, or treatment and reuse in other plant processes. The specific practices reported by the four facilities are:

1. Lime addition and sedimentation, recycle to other plant processes;
2. Neutralization, permanent lagoon disposal (no recycle);
3. Use as feedstock for fertilizer plant; and
4. Tailings pond (96 percent recycle).

MOLYBDIC OXIDE LEACHATE

Technical grade molybdic oxide may be leached with nitric acid, hydrochloric acid, aqueous ammonia, ammonium chloride, and water either prior to dissolving and recrystallization to produce ammonium molybdate or to produce pure molybdic oxide. The leachate and rinsewater contain treatable levels of toxic metals, suspended solids, and ammonia. For the three plants generating this stream, the reported treatment practices for this waste stream are as follows:

1. Ammonia steam stripping, lime addition, and sedimentation; and
2. Evaporation ponds and contract hauling - two plants.

HYDROGEN REDUCTION FURNACE SCRUBBER

Hydrogen gas from the reduction furnaces used to produce molybdenum metal powder may be quenched or scrubbed with water prior to reuse in the furnaces. Treatable concentrations of toxic metals are present in the water discharged from the scrubbing system. Of the two facilities reporting this wastewater stream, one practices extensive recycle (>99 percent) and the other practices no recycle. Both plants are direct dischargers of this waste stream with no wastewater treatment practiced.

DEPLETED RHENIUM SCRUBBING SOLUTION

Rhenium is absorbed into solution from molybdenite roaster off-gases in a wet scrubbing system. After the rhenium is recovered from solution, the barren scrubber liquor is discharged as a wastewater stream. Treatable concentrations of toxic metals, particularly selenium, are present in this waste stream. Both of the facilities reporting this waste stream achieve zero discharge. The specific practices reported by these facilities are:

1. Lime addition and sedimentation, total reuse in other plant processes; and
2. Evaporation ponds and contract hauling.

CONTROL AND TREATMENT OPTIONS

The Agency examined three control and treatment technology alternatives that are applicable to the primary molybdenum and rhenium subcategory. The options selected for evaluation represent a combination of in-process flow reduction, pretreatment technology applicable to individual waste streams, and end-of-pipe treatment technologies. These options are discussed below.

OPTION A

The Option A treatment scheme consists of ammonia steam stripping preliminary treatment applied to molybdic oxide leachate wastewater. Also included is preliminary treatment consisting of iron co-precipitation to reduce molybdenum concentrations. Iron co-precipitation is applied to the combined stream of steam stripper effluent, molybdenum sulfide leachate, roaster SO_2 scrubber, hydrogen reduction furnace scrubber wastewater, and depleted rhenium scrubbing solution. Preliminary treatment is followed by chemical precipitation and sedimentation applied to the iron co-precipitation effluent. Chemical precipitation is used to remove metals by the addition of lime followed by gravity sedimentation. Suspended solids are removed by this process.

OPTION B

Option B for the primary molybdenum and rhenium subcategory consists of all treatment requirements of Option A (ammonia steam stripping, iron co-precipitation, chemical precipitation, and sedimentation) plus control technologies to reduce the discharge of wastewater volume. Water recycle of hydrogen reduction furnace scrubber liquor is the principal control mechanism for flow reduction.

OPTION C

Option C for the primary molybdenum and rhenium subcategory consists of all control and treatment requirements of Option B (ammonia steam stripping, iron co-precipitation, in-process flow reduction, chemical precipitation, and sedimentation) plus multimedia filtration technology added at the end of the Option B treatment scheme. Multimedia filtration is used to remove suspended solids, including precipitates of metals, beyond the concentration attainable by gravity sedimentation. The filter suggested is of the gravity, mixed media type, although other forms of filters such as rapid sand filters or pressure filters would perform as well. The addition of filters also provides consistent removal during periods in which there are rapid increases in flows or loadings of pollutants to the treatment system.

THIS PAGE INTENTIONALLY LEFT BLANK

SECTION VIII

COSTS, ENERGY, AND NONWATER QUALITY ASPECTS

This section presents a summary of compliance costs for the primary molybdenum and rhenium subcategory and a description of the treatment options and subcategory-specific assumptions used to develop these estimates. Together with the estimated pollutant reduction performance presented in Sections IX, X, XI, and XII of this supplement, these cost estimates provide a basis for evaluating each regulatory option. These cost estimates are also used in determining the probable economic impact of regulation on the subcategory at different pollutant discharge levels. In addition, this section addresses nonwater quality environmental impacts of wastewater treatment and control alternatives, including air pollution, solid wastes, and energy requirements, which are specific to the primary molybdenum and rhenium subcategory.

TREATMENT OPTIONS FOR EXISTING SOURCES

As discussed in Section VII, three treatment options have been developed for existing primary molybdenum and rhenium sources. The treatment schemes for each option are summarized below and schematically presented in Figures X-1 through X-3 (pages 3459 - 3461).

OPTION A

Option A consists of ammonia steam stripping and iron co-precipitation preliminary treatment, and chemical precipitation and sedimentation end-of-pipe technology.

OPTION B

Option B consists of in-process flow reduction measures, ammonia steam stripping and iron co-precipitation preliminary treatment, and chemical precipitation and sedimentation end-of-pipe technology. In-process flow reduction consists of the recycle of hydrogen reduction furnace scrubber water through holding tanks.

OPTION C

Option C requires the in-process flow reduction measures of Option B, ammonia steam stripping and iron co-precipitation preliminary treatment, and end-of-pipe treatment technology consisting of chemical precipitation, sedimentation, and multimedia filtration.

COST METHODOLOGY

A detailed discussion of the methodology used to develop the compliance costs is presented in Section VIII of Vol. I. Plant-

by-plant compliance costs for the nonferrous metals manufacturing category have been revised as necessary following proposal. These revisions calculate incre-mental costs, above treatment already in place, necessary to comply with the promulgated effluent limitations and standards, and are presented in the administrative record supporting this regulation. A comparison of the costs developed for proposal and the revised costs for the final regulation are presented in Table VIII-1 (page 3437) for the direct dischargers in the primary molybdenum and rhenium subcategory.

Each of the general assumptions used to develop compliance costs is presented in Section VIII of the General Development Document. Each subcategory also contains a unique set of waste streams requiring certain subcategory specific assumptions to develop compliance costs. The major assumptions specific to the primary molybdenum and rhenium subcategory are discussed briefly below.

(1) Cost for the removal of molybdenum are included in the treatment system costs. Molybdenum treatment effectiveness concentrations, based on iron co-precipitation, are estimated to be 1.83 and 1.23 mg/l for iron co-precipitation and iron co-precipitation with filtration, respectively.

(2) Costs for plants having total flows of less than 100 l/hr were based on the general guidelines established for low flows.

ENERGY REQUIREMENTS

Energy requirements for Option A are estimated at 103,000 kwh/yr. Option B energy requirements decrease over those for Option A because less water is being treated, thus saving energy costs for lime and settle treatment. Option C, which includes filtration, is estimated to increase energy consumption over Option B by approximately 1 percent. Further, the total energy requirement for Option C is approximately 1 percent of the estimated total plant energy usage. It is therefore concluded that the energy requirements of the treatment options considered will have no significant impact on total plant energy consumption. Iron co-precipitation is not expected to significantly increase the energy requirements in this subcategory.

SOLID WASTE

Sludges associated with the primary molybdenum and rhenium subcategory will necessarily contain quantities of metal priority pollutants. Wastes generated by primary smelters and refiners are currently exempt from regulation by Act of Congress (Resource Conservation and Recovery Act (RCRA), Section 3001(b)), as interpreted by EPA. Consequently, sludges generated from treating primary molybdenum and rhenium wastewater, including metallurgical acid plants wastewater, are not presently subject to regulation as hazardous wastes.

The technology basis for the metallurgical acid plants includes sulfide precipitation for the control of various toxic metals. The Agency believes sludge generated through sulfide precipitation (and sedimentation or pressure filtration) will be classified as hazardous under RCRA. The costs of hazardous waste disposal were considered in the economic analysis for this subcategory (in spite of the current statutory and regulation exemption) because sulfide will not form metal hydroxides that resist leaching. The costs of hazardous waste disposal were determined to be economically achievable. However, lime sludges are not expected to be hazardous. This judgment is based on the results of Extraction Procedure (EP) toxicity tests performed on similar sludges (toxic metal-bearing sludges) generated by other industries such as the iron and steel industry. A small amount of excess lime was added during treatment, and the sludges subsequently generated passed the toxicity test. See 40 CFR Part 261.24. Thus, the Agency believes that the wastewater sludges will similarly not be EP toxic if the recommended technology is applied.

If these wastes should be identified or are listed as hazardous, they will come within the scope of RCRA's "cradle to grave" hazardous waste management program, requiring regulation, from the point of generation to point of final disposition. EPA's generator standards would require generators of hazardous nonferrous metals manufacturing wastes to meet containerization, labeling, recordkeeping, and reporting requirements; if plants dispose of hazardous wastes off-site, they would have to prepare a manifest, which would track the movement of the wastes from the generator's premises to a permitted off-site treatment, storage, or disposal facility. See 40 CFR 262.40, 44 FR 33144 (May 19, 1980), as amended at 45 FR 86974 (December 31, 1980). The transporter regulations require transporters of hazardous wastes to comply with the manifest system to assure that the wastes are delivered to a permitted facility. See 40 CFR 263.20, 45 33151 (May 19, 1980), as amended at 45 FR 86973 (December 31, 1980). Finally, RCRA regulations establish standards for hazardous waste treatment, storage, and disposal facilities allowed to receive such wastes. See 40 CFR Part 464, 46 FR 2802 (January 12, 1981), and 47 FR 32274 (July 26, 1982).

Even if these wastes are not identified as hazardous, they still must be disposed of in compliance with the Subtitle D open dumping standards, implementing Section 4004 of RCRA. (See 44 FR 54438, September 13, 1979). The Agency has calculated as part of the costs for wastewater treatment the cost of hauling and disposing of these wastes. For more details, see Section VIII of the general development document.

It is estimated that 109 kkg/yr of sludge will be generated as a result of these promulgated regulations for the primary molybdenum and rhenium subcategory.

AIR POLLUTION

There is no reason to believe that any substantial air pollution problems will result from implementation of ammonia steam stripping, iron co-precipitation, chemical precipitation, sedimentation and multimedia filtration. Ammonia steam stripping yields an aqueous ammonia product stream. The other technologies transfer pollutants to solid waste and are not likely to transfer pollutants to air.

TABLE VIII-1

COST OF COMPLIANCE FOR THE PRIMARY MOLYBDENUM
AND RHENIUM SUBCATEGORY
DIRECT DISCHARGERS

Compliance costs for this subcategory cannot be presented here because the data on which they are based have been claimed to be confidential.

THIS PAGE INTENTIONALLY LEFT BLANK

SECTION IX

BEST PRACTICABLE CONTROL TECHNOLOGY CURRENTLY AVAILABLE

This section defines the effluent characteristics attainable through the application of best practicable control technology currently available (BPT). BPT reflects the performance by existing plants of various sizes, ages, and manufacturing processes within the primary molybdenum and rhenium subcategory, as well as the established performance of the recommended BPT systems. Particular consideration is given to the treatment already in place at existing plants.

The factors considered in identifying BPT include the total cost of applying the technology in relation to the effluent reduction benefits from such application, the age of equipment and facilities involved, the manufacturing processes used, nonwater quality environmental impacts (including energy requirements), and other factors the Administrator considers appropriate. In general. the BPT level represents the average of the existing performances of plants of various ages, sizes, processes, or other common characteristics. Where existing performance is uniformly inadequate, BPT may be transferred from a different subcategory or category. Limitations based on transfer of technology are supported by a rationale concluding that the technology is indeed transferable, and a reasonable prediction that it will be capable of achieving the prescribed effluent limits. BPT focuses on end-of-pipe treatment rather than process changes or internal controls except where such practices are common industry practice.

TECHNICAL APPROACH TO BPT

The Agency studied the nonferrous metals category to identify the processes used, the wastewaters generated, and the treatment processes installed. Information was collected from the category using data collection portfolios, and specific plants were sampled and the wastewaters analyzed. In making technical assessments of data, reviewing manufacturing processes, and assessing wastewater treatment technology options, both indirect and direct dischargers have been considered as a single group. An examination of plants and processes did not indicate any process differences based on the type of discharge, whether it be direct or indirect.

As explained in Section IV, the primary molybdenum and rhenium subcategory has been subdivided into five potential wastewater sources. Since the water use, discharge rates, and pollutant characteristics of each of these wastewaters is potentially unique, effluent limitations will be developed for each of the five subdivisions

For each of the subdivisions, a specific approach was followed for the development of BPT mass limitations. The first

requirement to calculate these limitations is to account for production and flow variability from plant to plant. Therefore, a unit of production or production normalizing parameter (PNP) was determined for each waste stream which could then be related to the flow from the process to determine a production normalized flow. Selection of the PNP for each process element is discussed in Section IV. Each plant within the subcategory was then analyzed to determine which subdivisions were present, the specific flow rates generated for each subdivision, and the specific production normalized flows for each subdivision. This analysis is discussed in detail in Section V. Nonprocess wastewaters such as rainfall runoff and noncontact cooling water are not considered in the analysis.

Production normalized flows for each subdivision were then analyzed to determine the flow to be used as part of the basis for BPT mass limitations. The selected flow (sometimes referred to as the BPT regulatory flow or BPT discharge rage) reflects the water use controls which are common practices within the category. The BPT regulatory flow is based on the average of all applicable data. Plants with normalized flows above the average may have to implement some method of flow reduction to achieve the BPT limitations.

The second requirement to calculate mass limitations is the set of concentrations that are achievable by application of the BPT level of treatment technology. Section VII discusses the various control and treatment technologies which are currently in place for each wastewater source. In most cases, the current control and treatment technologies consist of chemical precipitation and sedimentation (lime and settle technology) and a combination of reuse and recycle to reduce flow. Ammonia steam stripping is applied to streams with treatable concentrations of ammonia. Iron co-precipitation is applied to streams with treatable concentrations of molybdenum.

Using these regulatory flows and the achievable concentrations, the next step is to calculate mass loadings for each wastewater source or subdivision. This calculation was made on a stream-by-stream basis, primarily because plants in this subcategory may perform one or more of the operations in various combinations.

The mass loadings (milligrams of pollutant per metric ton of production - mg/kkg) were calculated by multiplying the BPT regulatory flow (l/kkg) by the concentration achievable by the BPT level of treatment technology (mg/l) for each pollutant parameter to be limited under BPT. These mass loadings are published in the Federal Register and in CFR Part 421 as the effluent limitations guidelines.

The mass loadings which are allowed under BPT for each plant will be the sum of the individual mass loadings for the various wastewater sources which are found at particular plants. Accordingly, all the wastewater generated within a plant may be combined for treatment in a single or common treatment system,

but the effluent limitations for these combined wastewaters are based on the various wastewater sources which actually contribute to the combined flow. This method accounts for the variety of combinations of wastewater sources and production processes which may be found at primary molybdenum and rhenium plants.

The Agency usually establishes wastewater limitations in terms of mass rather than concentration. This approach prevents the use of dilution as a treatment method (except for controlling pH). The production normalized wastewater flow (l/kkg) is a link between the production operations and the effluent limitations. The pollutant discharge attributable to each operation can be calculated from the normalized flow and effluent concentration achievable by the treatment technology and summed to derive an appropriate limitation for each plant.

INDUSTRY COST AND POLLUTANT REMOVAL ESTIMATES

In balancing costs in relation to pollutant removal benefits, EPA considers the volume and nature of existing discharges, the volume and nature of discharges expected after application of BPT, the general environmental effects of the pollutants, and the cost and economic impacts of the required pollution control level. The Act does not require or permit consideration of water quality problems attributable to particular point sources or industries, or water quality improvements in particular water quality bodies. Accordingly, water quality considerations were not the basis for selecting the proposed or promulgated BPT. See Weyerhaeuser Company v. Costle, 590 F.2d 1011 (D.C. Cir. 1978).

The methodology for calculating pollutant removal estimates and plant compliance costs is discussed in Section X. The pollutant removal estimates have been revised since proposal based on comments. Table X-2 show the estimated pollutant removal estimates for each treatment option for direct dischargers. Compliance costs for each option are presented in Table X-3.

BPT OPTION SELECTION

The technology basis for the promulgated BPT limitations is chemical precipitation and sedimentation technology to remove metals and solids from combined wastewaters and to control pH, and ammonia steam stripping and iron co-precipitation preliminary treatment. Ammonia stripping, chemical precipitation and sedimentation technologies are already in-place at one of the two dischargers in the subcategory. The best practicable technology is presented in Figure IX-1. The BPT treatment is equivalent to Option A described in Section VII.

Ammonia steam stripping is demonstrated at six facilities in the nonferrous metals manufacturing category. These facilities are treating ammonia bearing wastewaters associated with the production of primary tungsten, primary columbium and tantalum, primary molybdenum, secondary tungsten and cobalt, and primary zirconium and hafnium. EPA believes that performance data from the iron

and steel manufacturing category provide a valid measure of this technology performance on nonferrous metals manufacturing category wastewater because raw wastewater concentrations of ammonia are of the same order of magnitude in the respective raw wastewater matrices.

Chemical analysis data were collected of raw waste (treatment influent) and treated waste (treatment effluent) from one coke plant of the iron and steel manufacturing category. A contractor for EPA, using EPA sampling and chemical analysis protocols, collected six paired samples in a two-month period. These data are the data base for determining the effectiveness of ammonia steam stripping technology and are contained within the public record supporting this document. Ammonia treatment at this coke plant consisted of two steam stripping columns in series with steam injected countercurrently to the flow of the wastewater. A lime reactor for pH adjustment separated the two stripping columns.

The Agency has verified the proposed and promulgated steam stripping performance values using steam stripping data collected at a zirconium-hafnium plant, which has raw ammonia levels as high as any in the nonferrous metals manufacturing category. Data collected by the plant represent almost two years of daily operations, and support the long-term mean used to establish treatment effectiveness.

In addition, data submitted by a primary columbium-tantalum plant, which also has significant raw ammonia levels, verifies the promulgated steam stripping performance values.

Implementation of the promulgated BPT limitations will remove annually an estimated 73,631 kg of priority metals, 736 kg of molybdenum, 63,443 kg of ammonia, and 51,529 kg of TSS over estimated current discharge. While both discharging plants have the equipment in-place to comply with BPT, we do not believe that the plants are currently achieving the BPT mass limitations. The estimated capital and annual cost for achieving the promulgated BPT cannot be presented here because the data on which they are based have been claimed to be confidential.

More stringent technology options were not selected for BPT since they require in-process changes or end-of-pipe technologies less widely practiced in the subcategory, and, therefore, are more appropriately considered under BAT.

WASTEWATER DISCHARGE RATES

A BPT discharge rate is calculated for each subdivision based on the average of the flows of the existing plants, as determined from analysis of dcp. The discharge rate is used with the achievable treatment concentration to determine BPT effluent limitations. Since the discharge rate may be different for each wastewater source, separate production normalized discharge rates for each of the five wastewater sources are discussed below and

summarized in Table IX-1 (page 3446). The discharge rates are normalized on a production basis by relating the amount of wastewater generated to the mass of the product which is produced by the process associated with the waste stream in question. These production normalizing parameters, or PNPs, are listed in Table IX-1.

Section V of this document further describes the discharge flow rates and presents the water use and discharge flow rates for each plant by subdivision.

MOLYBDENUM SULFIDE LEACHATE

The BPT wastewater discharge rate for proposal and promulgation for molybdenum sulfide leaching is 463 l/kkg (112 gal/ton) of molybdenum sulfide concentrate leached prior to roasting. This rate is allocated only to facilities which leach molybdenum sulfide concentrates to remove excess alkali, prior to roasting. One of the seven plants which roasts molybdenite practices leaching prior to roasting. The water use and discharge rate are presented in Table V-1. This facility currently achieves zero discharge of this stream through the use of evaporation ponds and contract hauling. The possibility for achieving zero discharge of this stream in this manner is site-specific and therefore not applicable on a nationwide basis. The leaching and rinsing flow reported by this facility was used as the basis for the BPT flow allowance for this stream.

ROASTER SO_2 SCRUBBER

The BPT wastewater discharge rate for proposal and promulgation for molybdenite roaster SO_2 scrubber wastewater is 1,679 l/kkg (404 gal/ton) of molybdenum sulfide roasted. This rate is allocated only to those plants which use scrubbers to control SO_2 emissions from molybdenum sulfide roaster flue gases. Four of the seven plants which roast molybdenum sulfide concentrates use scrubbers to control SO_2 emissions. Three of these facilities use caustic scrubbers and achieve zero discharge through the use of tailings ponds or permanent impoundments. One facility uses an ammonia scrubbing solution and achieves zero discharge by using the scrubber liquor as feed material to a fertilizer plant. One of the four facilities did not report actual flow rates for this stream. The BPT flow rate was based on the production normalized flows from two facilities which reported flow rates for scrubbing systems. The production normalized flow reported by plant 1174 was not used because the reported water use was inordinately high, and not characteristic of effective wet air pollution control systems.

MOLYBDIC OXIDE LEACHATE

The BPT wastewater discharge rate at promulgation for molybdic oxide leachate is 11,584 l/kkg (2,782 gal/ton) of molybdenum contained in the molybdic oxide leached. This rate is not equivalent to the proposed BPT rate of 7,630 l/kkg of ammonium

molybdate product. This rate was revised following proposal based on additional flow and production data obtained by the Agency through a field sampling effort at plant 1099. In addition, the flows for plants 1146 and 1064 have been revised in Table V-3 based on the fact that 49 percent of ammonium molybdate (by weight) is molybdenum.

The promulgated rate is applicable only to those plants which leach molybdic oxide to increase its purity. This practice is often associated with the production of ammonium molybdate compounds. The water use and discharge rates for three of the facilities which practice molybdic oxide leaching are presented in Table V-3. The remaining plant which leaches molybdic oxide uses an evaporator in the process and generates no wastewater. A representative for the facility, however, indicated that they plan to change from the evaporative process and will need to discharge wastewater in the near future. The BPT regulatory flow was based on the average production normalized water use of the three plants which reported discharging this wastewater (plants 1099, 1146, and 1064). One of the three plants which generates process wastewater from the ammonium molybdate process achieves zero discharge through the use of an evaporation pond and contract hauling. The possibility for achieving zero discharge in this manner is site-specific and therefore not applicable on a nationwide basis.

HYDROGEN REDUCTION FURNACE SCRUBBER

The BPT wastewater discharge rate at proposal and promulgation for hydrogen reduction furnace scrubbing is 22,898 l/kkg (5,505 gal/ton) of molybdenum metal powder produced. This rate is applicable only to those plants which practice wet scrubbing of hydrogen gas used in reduction furnaces. Two of the four plants which use reduction furnaces to produce molybdenum metal powder from either pure molybdic oxide or ammonium molybdate reported the use of wet scrubbing. The water use and discharge rates are presented in Table V-4 (page 3385). The BPT flow rate is based on the average of the water use at these two facilities. One of the facilities reported 0 percent recycle. The other facility reported recycle but did not specify the recycle ratio. The recycle ratio at this facility was assumed to be 99 percent and the water use was calculated from the discharge rate by dividing the discharge flow by 0.01, yielding a water use of 2,000 l/kkg. The water use and discharge flow rates for the facility which practices no recycle are the same. This facility reported a reduction furnace scrubber flow rate of 43,795 l/kkg. The BPT flow rate is based on the average of the water use rates at these two facilities.

DEPLETED RHENIUM SCRUBBING SOLUTION

The BPT wastewater discharge rate at proposal and promulgation for depleted rhenium scrubbing solution is 716 l/kkg (173 gal/ton) of molybdenum sulfide roasted. This rate is applicable only to those facilities which recover crude ammonium perrhenate

from molybdenite roaster flue gases. Two of the seven plants which roast molybdenite concentrates reported that they recover rhenium from roaster flue gases. The water use and discharge rates are presented in Table V-5 (page 3386). Both of the facilities which practice rhenium recovery achieve zero discharge through the use of evaporation ponds, contract hauling or recycle to other plant processes. The possibility of achieving zero discharge in this manner is site-specific and therefore not applicable on a nationwide basis. The BPT flow rate is based on the average of the production normalized water use rates reported by the two facilities reporting this stream. The production normalized flow rates used in the average are 637 l/kkg and 794 l/kkg.

REGULATED POLLUTANT PARAMETERS

The raw wastewater concentrations from individual operations and the subcategory as a whole were examined to select certain pollutant parameters for limitation. This examination and evaluation was presented in Section VI. A total of nine pollutants or pollutant parameters were selected for limitation and are listed below:

115.	arsenic	ammonia
122.	lead	fluoride
124.	nickel	molybdenum
125.	selenium	total suspended solids
		pH

EFFLUENT LIMITATIONS

The treatment effectiveness concentrations achievable by application of the promulgated BPT treatment are explained in Section VII of Vol. I and summarized there in Table VII-21 (page 248), with one exception. This exception is the molybdenum treatment effectiveness value. As a part of the settlement agreement, EPA agreed to propose to suspend the molybdenum limitations in the previously promulgated BPT and BAT limitations, NSPS and PSNS for this subcategory. EPA would then recommend interim limits for use in permits on a Best Professional Judgment (BPJ) basis. These values would be recommended to be effective until after iron co-precipitation treatment is installed and evaluated.

The achievable treatment concentrations for all regulated pollutants (both one day maximum and monthly average values) are multiplied by the BPT normalized discharge flows summarized in Table IX-1 (page 3446) to calculate the mass of pollutants allowed to be discharged per mass of product. The results of these calculations in milligrams of pollutant per kilogram of product represent the BPT effluent limitations and are presented in Table IX-2 (page 3447) for each individual waste stream.

Table IX-1

BPT WASTEWATER DISCHARGE RATES FOR THE PRIMARY MOLYBDENUM AND RHENIUM SUBCATEGORY

Wastewater Stream	BPT Normalized Discharge Rate l/kkg	gal/ton	Production Normalizing Parameter
Molybdenum Sulfide Leachate	463	112	Molybdenum sulfide leached
Roaster SO_2 Scrubber	1,679	404	Molybdenum sulfide roasted
Molybdic Oxide Leachate	11,584	2,782	Molybdenum contained in molybdic oxide leached
Hydrogen Reduction Furnace Scrubber	22,898	5,505	Molybdenum powder produced
Depleted Rhenium Scrubbing Solution	716	173	Molybdenum sulfide roasted

Table IX-2

BPT MASS LIMITATIONS FOR THE PRIMARY MOLYBDENUM AND RHENIUM SUBCATEGORY

(a) Molybdenum Sulfide Leachate BPT

Pollutant or pollutant property	Maximum for any one day	Maximum for monthly average
mg/kg (lb/million lbs) of molybdenum sulfide leached		
*Arsenic	0.968	0.431
Chromium	0.204	0.083
Copper	0.880	0.463
*Lead	0.194	0.093
*Nickel	0.889	0.588
*Selenium	0.569	0.255
Zinc	0.676	0.282
*Ammonia	61.720	27.130
*Fluoride	16.210	9.214
*Molybdenum	Reserved	Reserved
Rhenium	3.060	1.583
*TSS	18.980	9.029
*pH Within the range of 7.5 to 10.0 at all times		

(b) Roaster SO_2 Scrubber BPT

Pollutant or pollutant property	Maximum for any one day	Maximum for monthly average
mg/kg (lb/million lbs) of molybdenum sulfide roasted		
*Arsenic	3.509	1.561
Chromium	0.739	0.302
Copper	3.190	1.679
*Lead	0.705	0.336
*Nickel	3.224	2.132
*Selenium	2.065	0.923
Zinc	2.451	1.024
*Ammonia	223.800	98.390
*Fluoride	58.770	33.410
*Molybdenum	Reserved	Reserved
Rhenium	11.100	5.742
*TSS	68.840	32.740
*pH Within the range of 7.5 to 10.0 at all times		

*Regulated Pollutant

Table IX-2 (Continued)

BPT MASS LIMITATIONS FOR THE PRIMARY MOLYBDENUM AND RHENIUM SUBCATEGORY

(c) Molybdic Oxide Leachate BPT

Pollutant or pollutant property	Maximum for any one day	Maximum for monthly average
	mg/kg (lb/million lbs) of molybdenum contained in molybdic oxide leached	
*Arsenic	24.210	10.770
Chromium	5.097	2.085
Copper	22.010	11.580
*Lead	4.865	2.317
*Nickel	22.240	14.710
*Selenium	14.250	6.371
Zinc	16.910	7.066
*Ammonia	1,544.000	678.800
*Fluoride	405.400	230.500
*Molybdenum	Reserved	Reserved
Rhenium	76.570	39.620
*TSS	474.900	225.900
*pH	Within the range of 7.5 to 10.0 at all times	

(d) Hydrogen Reduction Furnace Scrubber BPT

Pollutant or pollutant property	Maximum for any one day	Maximum for monthly average
	mg/kg (lb/million lbs) of molybdenum powder produced	
*Arsenic	47.860	21.300
Chromium	10.080	4.122
Copper	43.510	22.900
*Lead	9.617	4.580
*Nickel	43.960	29.080
*Selenium	28.160	12.590
Zinc	33.430	13.970
*Ammonia	3,052.000	1,342.000
*Fluoride	801.400	455.700
*Molybdenum	Reserved	Reserved
Rhenium	151.400	78.310
*TSS	938.800	446.500
*pH	Within the range of 7.5 to 10.0 at all times	

*Regulated Pollutant

Table IX-2 (Continued)

BPT MASS LIMITATIONS FOR THE PRIMARY
MOLYBDENUM AND RHENIUM SUBCATEGORY

(e) Depleted Rhenium Scrubbing Solution BPT

Pollutant or pollutant property	Maximum for any one day	Maximum for monthly average
mg/kg (lb/million lbs) of molybdenum sulfide roasted		
*Arsenic	1.496	0.666
Chromium	0.315	0.129
Copper	1.360	0.716
*Lead	0.301	0.143
*Nickel	1.375	0.909
*Selenium	0.881	0.394
Zinc	1.045	0.437
*Ammonia	95.440	41.960
*Fluoride	25.060	14.250
*Molybdenum	Reserved	Reserved
Rhenium	4.733	2.449
*TSS	29.360	13.960
*pH Within the range of 7.5 to 10.0 at all times		

*Regulated Pollutant

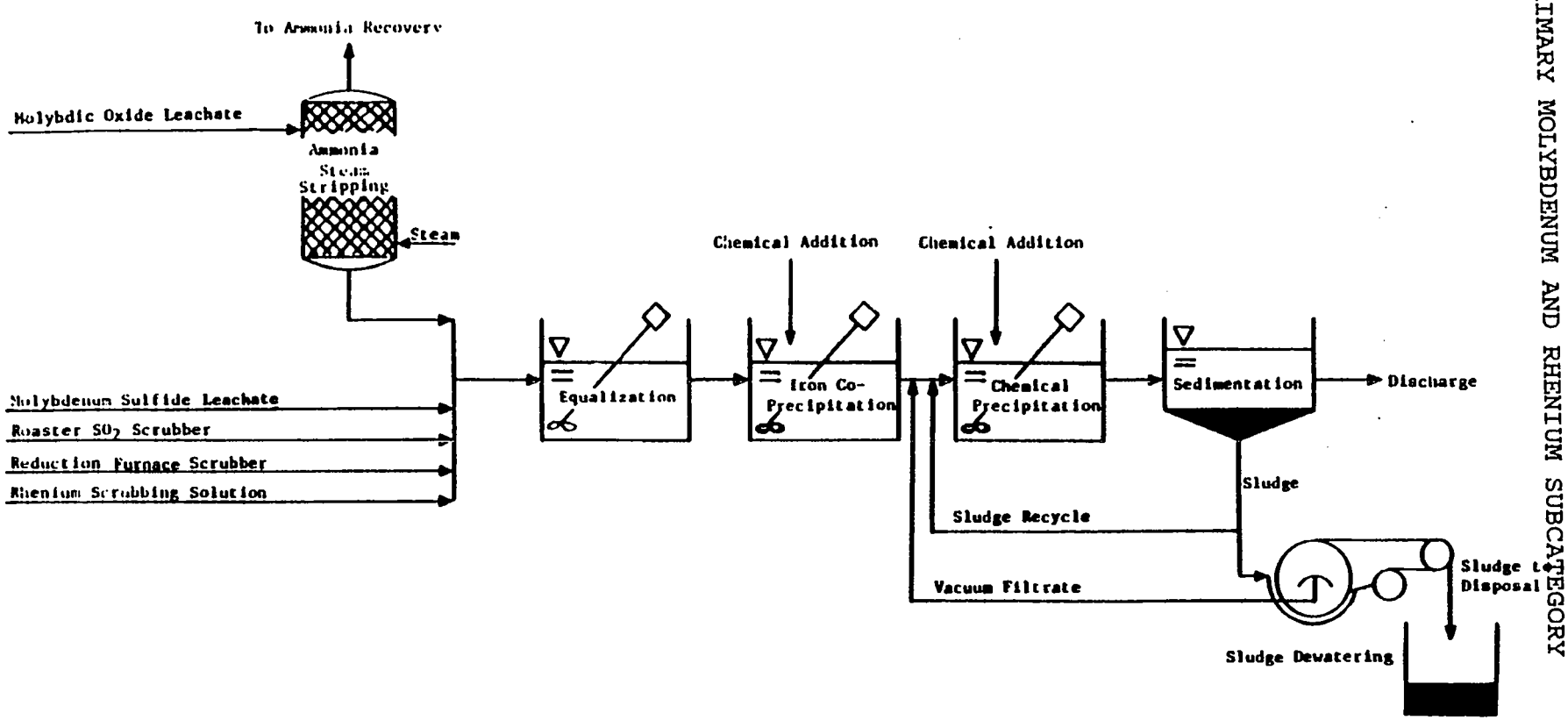

Figure IX-1

BPT TREATMENT SCHEME FOR THE PRIMARY MOLYBDENUM AND RHENIUM SUBCATEGORY

SECTION X

BEST AVAILABLE TECHNOLOGY ECONOMICALLY ACHIEVABLE

These effluent limitations are based on the best control and treatment technology used by a specific point source within the industrial category or subcategory, or by another industry where it is readily transferable. Emphasis is placed on additional treatment techniques applied at the end of the treatment systems currently used, as well as reduction of the amount of water used and discharged, process control, and treatment technology optimization.

The factors considered in assessing best available technology economically achievable (BAT) include the age of equipment and facilities involved, the manufacturing process used, process changes, nonwater quality environmental impacts (including energy requirements), and the costs of application of such technology BAT technology represents the best available technology at plants of various ages, sizes, processes, or other characteristics. BAT may be transferred from a different subcategory or category and BAT may include feasible process changes or internal controls, even when not in common industry practice.

The statutory assessment of BAT considers costs, but does not require a balancing of costs against pollutant removal benefits. However, in assessing the proposed and promulgated BAT, the Agency has given substantial weight to the economic achievability of the selected technology.

TECHNICAL APPROACH TO BAT

The Agency reviewed a wide range of technology options and evaluated the available possibilities to ensure that the most effective and beneficial technologies were used as the basis of BAT. To accomplish this, the Agency elected to examine three technology options which could be applied to the primary molybdenum and rhenium subcategory as treatment options for the basis of BAT effluent limitations.

For the development of BAT effluent limitations, mass loadings were calculated for each wastewater source or subdivision in the subcategory using the same technical approach as described in Section IX for BPT limitations development. The differences in the mass loadings for BPT and BAT are due to increased treatment effectiveness achievable with the more sophisticated BAT treatment technology and reductions in the effluent flows usually achieved by recycle and reuse technologies.

In summary, the treatment technologies considered for BAT are presented below:

Option A (Figure X-1, page 3466) is based on

- o Preliminary treatment with ammonia steam stripping
- o Preliminary treatment with iron co-precipitation
- o Chemical precipitation and sedimentation

Option B (Figure X-2, page 3467) is based on

- o Preliminary treatment with ammonia steam stripping
- o Preliminary treatment with iron co-precipitation
- o Chemical precipitation and sedimentation
- o In-process flow reduction

Option C (Figure X-3, page 3458) is based on

- o Preliminary treatment with ammonia steam stripping
- o Preliminary treatment with iron co-precipitation
- o Chemical precipitation and sedimentation
- o In-process flow reduction
- o Multimedia filtration

The three options examined for BAT are discussed in greater detail below. The first option considered is the same as the BPT treatment which was presented in the previous section. The last two options each represent substantial progress toward the prevention of polluting the environment above and beyond the progress achievable by BPT.

OPTION A

Option A for the primary molybdenum and rhenium subcategory is equivalent to the control and treatment technologies which were analyzed for BPT in Section IX. The BPT end-of-pipe treatment scheme includes chemical precipitation, sedimentation, with ammonia steam stripping and iron co-precipitation preliminary treatment (see Figure X-1). The discharge rates for Option A are equal to the discharge rates allocated to each stream at a BPT discharge flow.

OPTION B

Option B for the primary molybdenum and rhenium subcategory achieves lower pollutant discharge by building upon the Option A end-of-pipe treatment technology, which consists of ammonia steam stripping, iron co-precipitation, chemical precipitation, and sedimentation. Flow reduction measures are added to Option A treatment (see Figure X-2). These flow reduction measures, including in-process changes, result in the elimination of some wastewater streams and the concentration of pollutants in other effluents. Treatment of a more concentrated effluent allows achievement of a greater net pollutant removal and introduces the possible economic benefits associated with treating a lower volume of wastewater.

The method used in Option B to reduce process wastewater

generation or discharge rates is recycle of water used in wet air pollution control. There are two wastewater sources associated with wet air pollution control or gas cleaning and quenching prior to recycle which are regulated under these effluent limitations:

--Roaster SO_2 scrubber, and
--Hydrogen reduction furnace scrubber.

Table X-1 presents the number of plants reporting wastewater use with these sources, the number of plants practicing recycle of scrubber water, and the range of recycle values being used.

The BAT regulatory flow for hydrogen reduction furnace scrubbers is based on recycle of scrubber liquor as discussed liter in this section, and represents the best available technology economically achievable for this stream. The BAT regulatory flow for roaster SO_2 scrubbers will not be flow reduced because the Agency believes that flow reduction beyond the BPT regulatory flow is not warranted.

OPTION C

Option C for the primary molybdenum and rhenium subcategory consists of all control and treatment requirements of Option B (ammonia steam stripping, iron co-precipitation, in-process flow reduction, chemical precipitation, and sedimentation) plus multi-media filtration technology added at the end of the Option B treatment scheme (see Figure X-3). Multimedia filtration is used to remove suspended solids, including precipitates of toxic metals, beyond the concentrations attainable by gravity sedimentation alone. The filter suggested is of the gravity, mixed media type, although other filters, such as rapid sand filters or pressure filters, would perform as well.

INDUSTRY COST AND POLLUTANT REMOVAL ESTIMATES

As one means of evaluating each technology option, EPA developed estimates of the pollutant removal estimates and the compliance costs associated with each option. The methodologies are described below.

POLLUTANT REMOVAL ESTIMATES

A complete description of the methodology used to calculate the estimated pollutant removal, achieved by the application of the various treatment options is presented in Section X of the General Development Document. The pollutant removal estimates have been revised since proposal based on industry comments on the proposed rulemaking; however, the methodology for calculating pollutant removals was not changed. The data used for estimating removals are the same as those used to revise the compliance cost estimates.

In short, sampling data collected during the field sampling

program were used to characterize the major waste streams considered for regulation. At each sampled facility, the sampling data was production normalized for each unit operation (i.e., mass of pollutant generated per mass of product manufactured). This value, referred to as the raw waste, was used to estimate the mass of priority pollutants generated within the primary molybdenum and rhenium subcategory. The pollutant removal estimates were calculated for each plant by first estimating the total mass of each pollutant in the untreated wastewater. This was calculated by first multiplying the raw waste values by the corresponding production value for that stream and then summing these values for each pollutant for every stream generated by the plant.

Next, the volume of wastewater discharged after the application of each treatment option was estimated for each operation at each plant by first comparing the actual discharge to the regulatory flow. The smaller of the two values was selected and summed with the other plant flows. The mass of pollutant discharged was then estimated by multiplying the achievable concentration values attainable with the option (mg/l) by the estimated volume of process wastewater discharged by the subcategory. Finally, the mass of pollutant removed is the difference between the estimated mass of pollutant generated by each plant in the subcategory and the mass of pollutant discharged after application of the treatment option. The pollutant removal estimates for direct dischargers in the primary molybdenum and rhenium subcategory are presented in Table X-2.

COMPLIANCE COST

In estimating subcategory-wide compliance costs, the first step was to develop a cost estimation model, relating the total costs associated with installation and operation of wastewater treatment technologies to plant process wastewater discharge. EPA applied the model to each plant. The plant's investment and operating costs are determined by what treatment it has in place and by its individual process wastewater discharge flow. As discussed above, this flow is either the actual or the BAT regulatory flow, whichever is lesser. The final step was to annualize the capital costs, and to sum the annualized capital costs, and the operating and maintenance costs for each plant, yielding the cost of compliance for the subcategory (see Table X-3). These costs were used in assessing economic achievability.

BAT OPTION SELECTION - PROPOSAL

EPA selected Option C for the proposed BAT which included in-process flow reduction, ammonia steam stripping, chemical precipitation, sedimentation and multimedia filtration. There was a capital and annual cost associated with the proposed BAT; however, these costs could not be presented because they were based on data which was claimed to be confidential. Implementation of the proposed BAT was estimated to remove 73,655 kg of priority metals annually.

EPA proposed to expand the applicability of the promulgated BAT limitations for the metallurgical acid plants subcategory to include molybdenum acid plants. The proposed limits were based on flow reduction, sulfide precipitation, chemical precipitation, sedimentation and filtration. Compliance costs were not presented because they were based on confidential information.

BAT OPTION SELECTION - PROMULGATION

After proposal, EPA received comments concerning the removal of molybdenum in a lime and settle treatment system. For promulgation, EPA is adding iron co-precipitation to the proposed BAT technology in order to effectively remove molybdenum from the raw wastewater. The promulgated BAT is equivalent to Option C discussed in Section VII of this document, which includes ammonia steam stripping. flow reduction, iron co-precipitation, chemical precipitation, sedimentation and multimedia filtration. With the exception of molybdenum, the treatment performance concentrations used to calculate the promulgated mass limitations are equal to the values used to calculate the proposed mass limitations.

Iron co-precipitation is an effective method for removing molybdenum from process wastewater. This technology is demonstrated industries. The treatment effectiveness concentration used for molybdenum at promulgation was based on data from that facility. However, petitioners questioned the data on which the treatment effectiveness concentration for molybdenum removal is based. As a part of the settlement agreement, the petitioners would agree to install iron coprecipitation, as the model technology, on all of the molybdenum-bearing wastestreams at their facilities included in the Primary Molybdenum and Rhenium subcategory and to provide operating data to the Agency. EPA agreed to consider these data in any rulemaking to propose new molybdenum limits. In the interim, EPA would propose to suspend the molybdenum limitations in the previously promulgated BPT and BAT limitations, NSPS and PSNS for this subcategory. EPA would then recommend two sets of interim limits for use in permits on a Best Professional Judgment (BPJ) basis. See Section IX of this document for further discussion of the molybdenum treatment effectiveness concentration.

Implementation of the promulgated BAT limitations would remove annually an estimated 73,655 kg of priority metals and 737 kg of molybdenum. No additional ammonia is removed at BAT. The estimated capital and annual cost for achieving the promulgated BAT cannot be presented here because the data on which they are based have been claimed to be confidential.

We are promulgating filtration as part of the BAT technology because this technology is demonstrated in the nonferrous metals manufacturing category (25 facilities presently have filters), and results in additional removal of toxic metals. In addition, filtration adds reliability to the treatment system by making it

less susceptible to operator error and to sudden changes in raw wastewater flows and concentrations.

FINAL AMENDMENTS TO THE REGULATION

For the primary molybdenum and Rhenium Subcategory, EPA prepared a settlement agreement in June 1987, to amend the regulations promulgated on September 20, 1985 (50 FR 38276). The settlement agreement concerns one topic, namely, molybdenum limitations, which is fully described in Sections IX and X of this document. EPA has proposed this amendment (54 FR 18412), and after reviewing comments will take final action.

WASTEWATER DISCHARGE RATES

A BAT discharge rate was calculated for each subdivision based upon the flows of the existing plants, as determined from analysis of the dcp. The discharge rate is used with the achievable treatment concentration to determine BAT effluent limitations. Since the discharge rate may be different for each wastewater source, separate production normalized discharge rates for each of the six wastewater sources were determined and are summarized in Table X-4 (page 3462). The discharge rates are normalized on a production basis by relating the amount of wastewater generated to the mass of the product which is produced by the process associated with the waste stream in question. These production normalizing parameters (PNP) are also listed in Table X-4.

The BAT wastewater discharge rate used at promulgation is the same as the wastewater discharge rate used at proposal for four of the five wastewater streams in the primary molybdenum and rhenium subcategory. Based on the available data, the Agency did not find that further flow reduction would be feasible for these wastewater sources. The rationale for determining the regulatory flows for these four streams was previously presented in Section IX. The wastewater streams for which BAT discharge rates differ from BPT is discussed below.

HYDROGEN REDUCTION FURNACE SCRUBBER

The BAT wastewater discharge rate used at proposal and promulgation for hydrogen reduction furnace scrubber water is 2,290 l/kkg (550 gal/ton). This rate is allocated only to those plants which practice water scrubbing of recirculating hydrogen gas from reduction furnaces. The BAT discharge rate is based on 90 percent recycle of the average water use of the two plants reporting this stream. One facility currently practices extensive recycle (assumed to be greater than 99 percent as discussed in Section IX) and the other currently practices no recycle. Water use and discharge rates are presented in Table V-4 (page 3386).

REGULATED POLLUTANT PARAMETERS

The Agency placed particular emphasis on the priority pollutants. The raw wastewater concentrations from individual operations and the subcategory as a whole were examined to select certain pollutants and pollutant parameters for limitation. This examination and evaluation was presented in Section VI. The Agency, however, has chosen not to regulate all nine toxic pollutants selected in this analysis.

The high cost associated with analysis for toxic metal pollutants has prompted EPA to develop an alternative method for regulating and monitoring priority pollutant discharges from the nonferrous metals manufacturing category. Rather than developing specific effluent mass limitations and standards for each of the metals found in treatable concentrations in the raw wastewater from a given subcategory, the Agency is promulgating effluent mass limitations only for those pollutants generated in the greatest quantities as shown by the pollutant removal estimate analysis. The pollutants selected for specific limitation are listed below:

114. arsenic
122. lead
123. nickel
124. selenium
ammonia (as N)
fluoride
molybdenum

By establishing limitations and standards for certain metal pollutants, dischargers will attain the same degree of control over metal pollutants as they would have been required to achieve had all the metal pollutants been directly limited.

This approach is technically justified since the treatable concentrations used for chemical precipitation and sedimentation technology are based on optimized treatment for concomitant multiple metals removal. Thus, even though metals have somewhat different theoretical solubilities, they will be removed at very nearly the same rate in a chemical precipitation and sedimentation treatment system operated for multiple metals removal.

Filtration as part of the technology basis is likewise justified because this technology removes metals non-preferentially.

The priority metal pollutants selected for specific limitation in the primary molybdenum and rhenium subcategory to control the discharges of metal pollutants are arsenic, lead, nickel, and selenium. Ammonia is also selected for limitation since the methods used to control the regulated priority pollutants are not effective in the control of ammonia. Fluoride and molybdenum are included because they are valuable as indicator pollutants for properly operated chemical precipitation and sedimentation systems. The following priority pollutants are excluded from limitation on the basis that they are effectively controlled by the limitations developed for arsenic, lead, nickel, and

selenium:

119. chromium (Total)
120. copper
128. zinc

The priority metal pollutants arsenic, lead, nickel, and selenium, as well as the nonconventional metal pollutant molybdenum, are specifically limited to ensure the control of the excluded priority metal pollutants. These pollutants are indicators of the performance of the treatment technology.

EFFLUENT LIMITATIONS

The concentrations achievable by application of BAT are discussed in Section VII of Vol. I and summarized there in Table VII-21 (page 248). With the exception of the molybdenum treatment effectiveness concentration. See Section IX of this document for further discussion of the molybdenum treatment effectiveness concentration. The treatability concentrations including both one day maximum and monthly average values are multiplied by the BAT normalized discharge flows summarized in Table X-4 (page 3466) to calculate the mass of pollutants allowed to be discharged per mass of product. The results of these calculations in milligrams of pollutant per kilogram of product represent the promulgated BPT effluent limitations and are presented in Table X-4 for each waste stream.

Table X-1

CURRENT RECYCLE PRACTICES WITHIN THE PRIMARY MOLYBDENUM AND RHENIUM SUBCATEGORY

	Number of Plants With Wastewater	Number of Plants Practicing Recycle	Range of Recycle Values (%)
Roaster SO_2 Scrubber	4	1	0 - 96
Hydrogen Reduction Furnace Scrubber	2	1	0 - 99

Table X-2

POLLUTANT REMOVAL ESTIMATES
FOR DIRECT DISCHARGERS
PRIMARY MOLYBDENUM AND RHENIUM SUBCATEGORY

Pollutant	Total Raw Waste (kg/yr)	Option A Discharge (kg/yr)	Option A Removed (kg/yr)	Option B Discharge (kg/yr)	Option B Removed (kg/yr)	Option C Discharge (kg/yr)	Option C Removed (kg/yr)
Antimony	30.15	8.23	21.93	5.15	25.00	3.32	26.83
Arsenic	5.61	4.57	1.04	3.90	1.71	2.50	3.11
Cadmium	18.39	0.93	17.46	0.58	17.80	0.35	18.04
Chromium (Total)	23.21	1.07	22.13	0.70	22.50	0.58	22.63
Copper	40,440.83	6.82	40,434.01	4.27	40,436.56	2.76	40,438.07
Cyanide (Total)	1.52	0.75	0.77	0.66	0.86	0.65	0.86
Lead	12,818.33	1.41	12,816.91	0.88	12,817.44	0.57	12,817.76
Mercury	0.03	0.02	0.01	0.02	0.01	0.02	0.01
Nickel	12,530.39	8.70	12,521.69	5.45	12,524.94	1.55	12,528.83
Selenium	1.79	1.19	0.60	0.99	0.80	0.95	0.84
Silver	67.36	1.18	66.19	0.73	66.63	0.50	66.87
Thallium	2.54	1.68	0.86	1.40	1.13	1.35	1.19
Zinc	7,731.11	3.88	7,727.23	2.43	7,728.68	1.63	7,729.48
TOTAL PRIORITY POLLUTANTS	73,671.24	40.41	73,630.83	27.17	73,644.07	16.73	73,654.51
Ammonia	69,495.70	6,052.39	63,443.30	6,052.39	63,443.30	6,052.39	63,443.30
Cobalt	4,791.44	0.60	4,790.85	0.38	4,791.07	0.25	4,791.19
Fluoride	0.25	0.16	0.08	0.14	0.11	0.13	0.12
Molybdenum	739.02	2.97	736.06	2.97	736.06	1.99	737.03
TOTAL NONCONVENTIONALS	75,026.41	6,056.12	68,970.29	6,055.88	68,970.54	6,054.76	68,971.64
TSS	51,669.76	141.05	51,528.71	88.30	51,581.46	18.39	51,651.37
Oil and Grease	2,147.07	336.20	1,810.87	266.79	1,660.28	277.33	1,869.74
TOTAL CONVENTIONALS	53,816.83	477.25	53,339.58	375.09	53,441.74	295.71	53,521.12
TOTAL POLLUTANTS	202,514.48	6,573.78	195,940.70	6,458.14	196,056.35	6,367.20	196,147.27

TABLE X-3

COST OF COMPLIANCE FOR THE PRIMARY MOLYBDENUM
AND RHENIUM SUBCATEGORY
DIRECT DISCHARGERS

Compliance costs for this subcategory cannot be presented here because the data on which they are based have been claimed to be confidential.

Table X-4

BAT WASTEWATER DISCHARGE RATES FOR THE PRIMARY MOLYBDENUM AND RHENIUM SUBCATEGORY

Wastewater Stream	BAT Production Normalized Discharge Rate l/kkg	BAT Production Normalized Discharge Rate gal/ton	Production Normalizing Parameter
Molybdenum Sulfide Leachate	463	112	Molybdenum sulfide leached
Roaster SO_2 Scrubber	1,679	404	Molybdenum sulfide roasted
Molybdic Oxide Leachate	11,584	2,782	Molybdenum contained in molybdic oxide leached
Hydrogen Reduction Furnace Scrubber	2,290	551	Molybdenum powder produced
Depleted Rhenium Scrubbing Solution	716	173	Molybdenum sulfide roasted

TABLE X-5

BAT MASS LIMITATIONS FOR THE
PRIMARY MOLYBDENUM AND RHENIUM SUBCATEGORY

(a) Molybdenum Sulfide Leachate BAT

Pollutant or pollutant property	Maximum for any one day	Maximum for monthly average
mg/kg (lb/million lbs) of molybdenum sulfide leached		
*Arsenic	0.644	0.287
Chromium	0.171	0.070
Copper	0.593	0.282
*Lead	0.130	0.060
*Nickel	0.255	0.171
*Selenium	0.380	0.171
Zinc	0.472	0.194
*Ammonia	61.720	27.130
*Fluoride	16.210	9.214
*Molybdenum	Reserved	Reserved
Rhenium	2.329	1.032

(b) Roaster SO_2 Scrubber BAT

Pollutant or pollutant property	Maximum for any one day	Maximum for monthly average
mg/kg (lb/million lbs) of molybdenum sulfide roasted		
*Arsenic	2.334	1.041
Chromium	0.621	0.252
Copper	2.149	1.024
*Lead	0.470	0.218
*Nickel	0.923	0.621
*Selenium	1.377	0.621
Zinc	1.713	0.705
*Ammonia	223.800	98.390
*Fluoride	58.770	33.410
*Molybdenum	Reserved	Reserved
Rhenium	8.445	3.744

*Regulated Pollutant

TABLE X-5 (Continued)

BAT MASS LIMITATIONS FOR THE
PRIMARY MOLYBDENUM AND RHENIUM SUBCATEGORY

(c) Molybdic Oxide Leachate BAT

Pollutant or pollutant property	Maximum for any one day	Maximum for monthly average
	mg/kg (lb/million lbs) of molybdenum contained in molybdic oxide leached	
*Arsenic	16.100	7.182
Chromium	4.286	1.738
Copper	14.830	7.066
*Lead	3.244	1.506
*Nickel	6.371	4.286
*Selenium	9.499	4.286
Zinc	11.820	4.865
*Ammonia	1,544.000	678.800
*Fluoride	405.400	230.500
*Molybdenum	Reserved	Reserved
Rhenium	58.270	25.830

(d) Hydrogen Reduction Furnace Scrubber BAT

Pollutant or pollutant property	Maximum for any one day	Maximum for monthly average
	mg/kg (lb/million lbs) of molybdenum powder produced	
*Arsenic	3.183	1.420
Chromium	0.847	0.344
Copper	2.931	1.397
*Lead	0.641	0.298
*Nickel	1.260	0.847
*Selenium	1.878	0.847
Zinc	2.336	0.962
*Ammonia	305.300	134.200
*Fluoride	80.150	45.570
*Molybdenum	Reserved	Reserved
Rhenium	11.520	5.107

*Regulated Pollutant

TABLE X-5 (Continued)

BAT MASS LIMITATIONS FOR THE
PRIMARY MOLYBDENUM AND RHENIUM SUBCATEGORY

(e) Depleted Rhenium Scrubbing Solution BAT

Pollutant or pollutant property	Maximum for any one day	Maximum for monthly average
	mg/kg (lb/million lbs) of molybdenum sulfide roasted	
*Arsenic	0.995	0.444
Chromium	0.265	0.107
Copper	0.916	0.437
*Lead	0.200	0.093
*Nickel	0.394	0.265
*Selenium	0.587	0.265
Zinc	0.730	0.301
*Ammonia	95.440	41.960
*Fluoride	25.060	14.250
*Molybdenum	Reserved	Reserved
Rhenium	3.601	1.597

*Regulated Pollutant

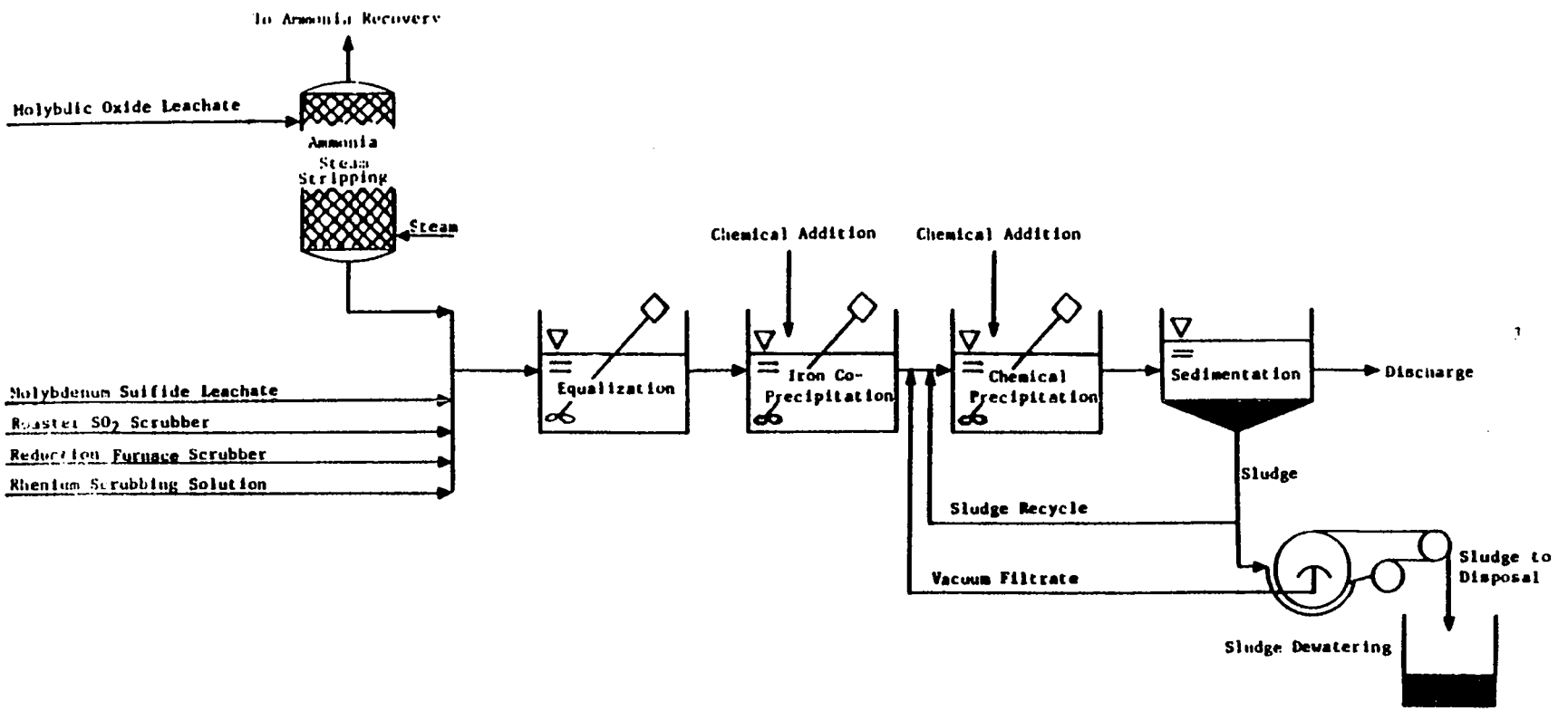

Figure X-1

BAT TREATMENT SCHEME FOR OPTION A

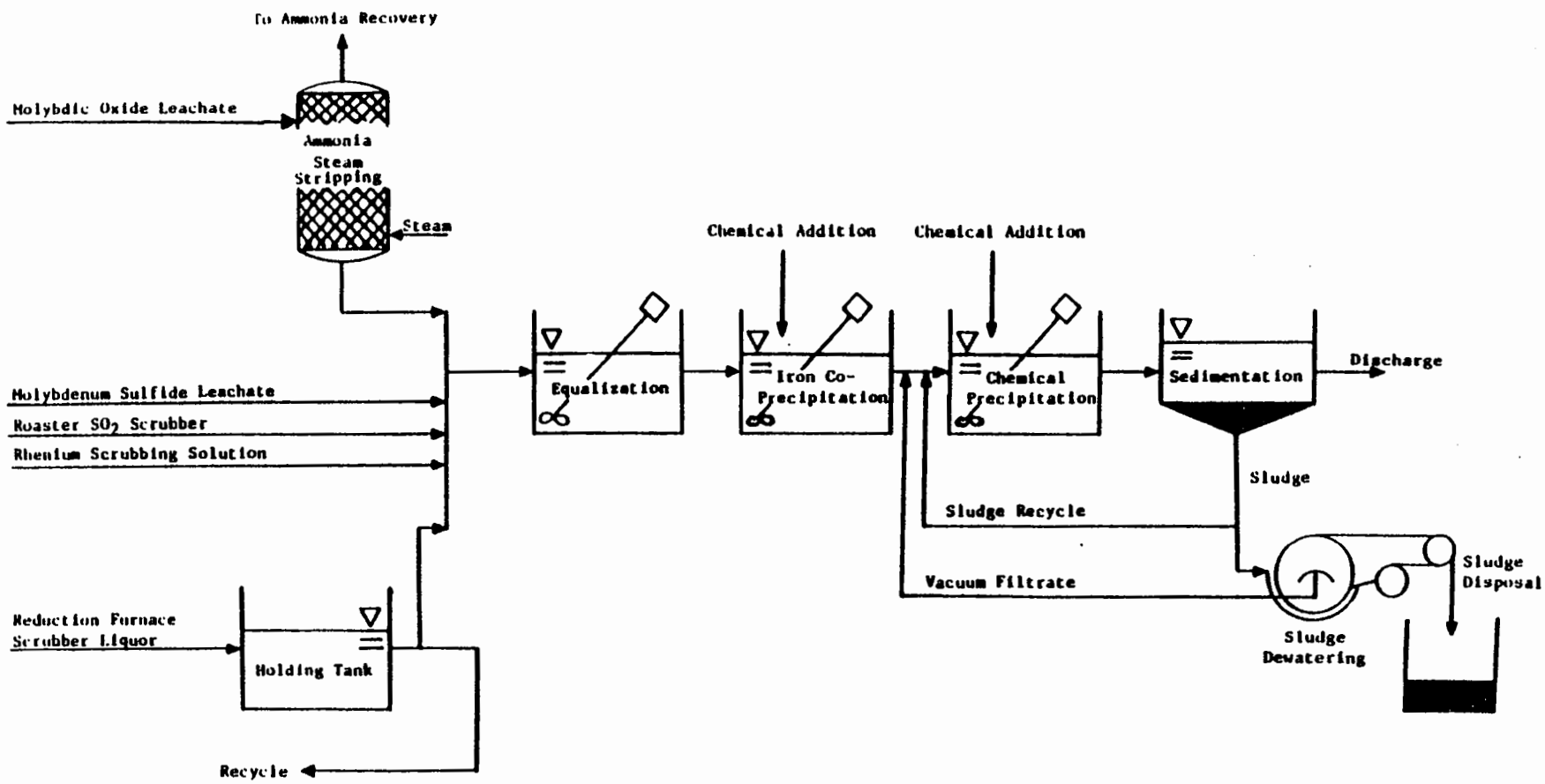

Figure X-2

BAT TREATMENT SCHEME FOR OPTION B

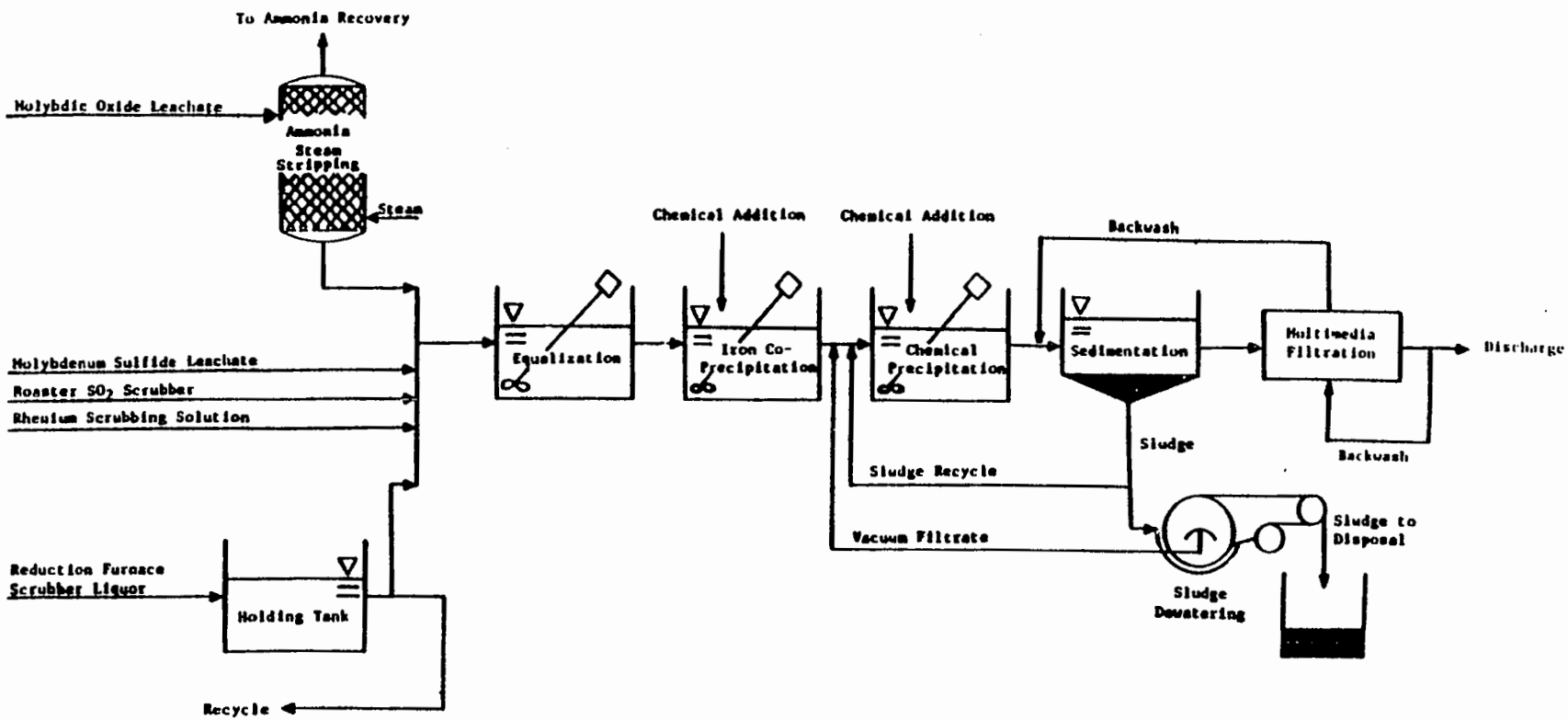

Figure X-3

BAT TREATMENT SCHEME FOR OPTION C

SECTION XI

NEW SOURCE PERFORMANCE STANDARDS

This section describes the technologies for treatment of wastewater from new sources and presents mass discharge standards for regulatory pollutants for NSPS in the primary molybdenum and rhenium subcategory, based on the selected treatment technology. New plants have the opportunity to design the best and most efficient production processes and wastewater treatment technologies without facing the added costs and restrictions encountered in retrofitting an existing plant. Therefore, EPA has considered the best demonstrated process changes, in-plant controls, and end-of-pipe treatment technologies which reduce pollution to the maximum extent feasible.

TECHNICAL APPROACH TO NSPS

New source performance standards are equivalent to the best available technology (BAT) selected for currently existing primary molybdenum and rhenium plants. This result is a consequence of careful review by the Agency of a wide range of technical options for new source treatment systems. Additionally, there was nothing found to indicate that the wastewater flows and characteristics of new plants would not be similar to those from existing plants, since the processes used by new sources are not expected to differ from those used at existing sources. Consequently, BAT production normalized discharge rates, which are based on the best existing practices of the subcategory, can also be applied to new sources. These rates are presented in Table XI-1 (page 3472).

Treatment technologies considered for the NSPS options are identical to the treatment technologies considered for the BAT options. These options are:

OPTION A

- Preliminary treatment with ammonia steam stripping (where required)
- Preliminary treatment with iron co-precipitation
- Chemical precipitation and sedimentation

OPTION B

- Preliminary treatment with ammonia steam stripping (where required)
- Preliminary treatment with iron co-precipitation
- Chemical precipitation and sedimentation
- In-process flow reduction of hydrogen reduction furnace scrubber liquor

OPTION C

- o Preliminary treatment with ammonia steam stripping (where required)
- o Preliminary treatment with iron co-precipitation
- o Chemical precipitation and sedimentation
- o In-process flow reduction of hydrogen reduction furnace scrubber liquor
- o Multimedia filtration

NSPS OPTION SELECTION - PROPOSAL

EPA proposed that the best available demonstrated technology for the primary molybdenum and rhenium subcategory be equivalent to Option C (ammonia steam stripping, flow reduction, chemical precipitation, sedimentation and multimedia filtration).

The wastewater flow rates for NSPS were the same as the proposed BAT flow rates. EPA did not believe that further flow reduction beyond BAT flow rates was feasible for this Subcategory.

EPA also proposed to expand the applicability of the existing NSPS regulation for metallurgical acids plants to include acid plants associated with primary molybdenum roasting operations.

NSPS OPTION SELECTION - PROMULGATION

EPA is promulgating best available demonstrated technology for the primary molybdenum and rhenium subcategory equivalent to Option C (ammonia steam stripping, flow reduction, iron co-precipitation, chemical precipitation, sedimentation and multimedia filtration). This differs from the proposed NSPS in that it includes iron co-precipitation treatment, which is necessary for effective molybdenum removal.

The wastewater flow rates for NSPS are the same as the BAT flow rates. The NSPS flow rates are presented in Table XI-1. Additional flow reduction and more stringent treatment technologies beyond BAT are not demonstrated or readily transferable to the primary molybdenum and rhenium subcategory, for the reasons stated at proposal.

REGULATED POLLUTANT PARAMETERS

The Agency has no reason to believe that the pollutants that will be found in treatable concentrations in processes within new sources will be any different than with existing sources. Accordingly, pollutants and pollutant parameters selected for limitation under NSPS, in accordance with the rationale of Sections VI and X, are identical to those selected for BAT. The conventional pollutant parameters TSS and pH are also selected for limitation.

NEW SOURCE PERFORMANCE STANDARDS

The NSPS discharge flows for each wastewater source are the same as the discharge rates for BAT and are shown in Table XI-1. The mass of pollutant allowed to be discharged per mass of product is calculated by multiplying the appropriate treatable concentration (mg/l) by the production normalized wastewater discharge flows (l/kkg). The achievable concentrations are listed in Table VII-21 (page 248) of Vol. I. With the exception of the molybdenum treatment effectiveness concentration. See Section IX of this document for discussion of the molybdenum treatment effectiveness concentration. The results of these calculations are the production-based new source performance standards. These standards are presented in Table XI-2 (page 3473).

Table XI-1

NSPS WASTEWATER DISCHARGE RATES FOR THE PRIMARY MOLYBDENUM AND RHENIUM SUBCATEGORY

Wastewater Stream	NSPS Production Normalized Discharge Rate l/kkg	NSPS Production Normalized Discharge Rate gal/ton	Production Normalizing Parameter
Molybdenum Sulfide Leachate	463	112	Molybdenum sulfide leached
Roaster SO_2 Scrubber	1,679	404	Molybdenum sulfide roasted
Molybdic Oxide Leachate	11,584	2,782	Molybdenum contained in molybdic oxide leached
Hydrogen Reduction Furnace Scrubber	2,290	551	Molybdenum powder produced
Depleted Rhenium Scrubbing Solution	716	173	Molybdenum sulfide roasted

TABLE XI-2

NSPS FOR THE PRIMARY MOLYBDENUM AND RHENIUM SUBCATEGORY

(a) Molybdenum Sulfide Leachate NSPS

Pollutant or pollutant property	Maximum for any one day	Maximum for monthly average
mg/kg (lb/million lbs) of molybdenum sulfide leached		
*Arsenic	0.644	0.287
Chromium	0.171	0.070
Copper	0.593	0.282
*Lead	0.130	0.060
*Nickel	0.255	0.171
*Selenium	0.380	0.171
Zinc	0.472	0.194
*Ammonia	61.720	27.130
*Fluoride	16.210	9.214
*Molybdenum	Reserved	Reserved
Rhenium	2.329	1.032
*TSS	6.945	5.556
*pH Within the range of 7.5 to 10.0 at all times		

(b) Roaster SO_2 Scrubber NSPS

Pollutant or pollutant property	Maximum for any one day	Maximum for monthly average
mg/kg (lb/million lbs) of molybdenum sulfide roasted		
*Arsenic	2.334	1.041
Chromium	0.621	0.252
Copper	2.149	1.024
*Lead	0.470	0.218
*Nickel	0.923	0.621
*Selenium	1.377	0.621
Zinc	1.713	0.705
*Ammonia	223.800	98.390
*Fluoride	58.770	33.410
*Molybdenum	8.445	3.744
Rhenium	Reserved	Reserved
*TSS	25.190	20.150
*pH Within the range of 7.5 to 10.0 at all times		

*Regulated Pollutant

TABLE XI-2 (Continued)

NSPS FOR THE PRIMARY MOLYBDENUM AND RHENIUM SUBCATEGORY

(c) Molybdic Oxide Leachate NSPS

Pollutant or pollutant property	Maximum for any one day	Maximum for monthly average
	mg/kg (lb/million lbs) of molybdenum contained in molybdic oxide leached	
*Arsenic	16.100	7.182
Chromium	4.286	1.738
Copper	14.830	7.066
*Lead	3.244	1.506
*Nickel	6.371	4.286
*Selenium	9.499	4.286
Zinc	11.820	4.865
*Ammonia	1,544.000	678.800
*Fluoride	405.400	230.500
*Molybdenum	Reserved	Reserved
Rhenium	58.270	25.830
*TSS	173.800	139.000
*pH Within the range of 7.5 to 10.0 at all times		

(d) Hydrogen Reduction Furnace Scrubber NSPS

Pollutant or pollutant property	Maximum for any one day	Maximum for monthly average
	mg/kg (lb/million lbs) of molybdenum powder produced	
*Arsenic	3.183	1.420
Chromium	0.847	0.344
Copper	2.931	1.397
*Lead	0.641	0.298
*Nickel	1.260	0.847
*Selenium	1.878	0.847
Zinc	2.336	0.962
*Ammonia	305.300	134.200
*Fluoride	80.150	45.570
*Molybdenum	Reserved	Reserved
Rhenium	11.520	5.107
*TSS	34.350	27.480
*pH Within the range of 7.5 to 10.0 at all times		

*Regulated Pollutant

TABLE XI-2 (Continued)

NSPS FOR THE PRIMARY MOLYBDENUM AND RHENIUM SUBCATEGORY

(e) Depleted Rhenium Scrubbing Solution NSPS

Pollutant or pollutant property	Maximum for any one day	Maximum for monthly average
	mg/kg (lb/million lbs) of molybdenum sulfide roasted	
*Arsenic	0.995	0.444
Chromium	0.265	0.107
Copper	0.916	0.437
*Lead	0.200	0.093
*Nickel	0.394	0.265
*Selenium	0.587	0.265
Zinc	0.730	0.301
*Ammonia	95.440	41.960
*Fluoride	25.060	14.250
*Molybdenum	Reserved	Reserved
Rhenium	3.601	1.597
*TSS	10.740	8.592
*pH	Within the range of 7.5 to 10.0 at all times	

*Regulated Pollutant

THIS PAGE INTENTIONALLY LEFT BLANK

SECTION XII

PRETREATMENT STANDARDS

This section describes the control and treatment technologies for pretreatment of process wastewaters from new sources in the primary molybdenum and rhenium subcategory. PSES are designed to prevent the discharge of pollutants which pass through, interfere with, or are otherwise incompatible with the operation of publicly owned treatment works (POTW). The Clean Water Act requires pretreatment for pollutants, such as toxic metals, that limit POTW sludge management alternatives. New indirect discharge facilities, like new direct discharge facilities, have the opportunity to incorporate the best available demonstrated technologies, including process changes, in-plant controls, and end-of-pipe treatment technologies; and to use plant site selection to ensure adequate treatment system installation. Pretreatment standards are to be technology based, analogous to the best available or best demonstrated technology for removal of toxic pollutants.

EPA is not promulgating pretreatment standards for existing sources at this time because there are currently no indirect discharging facilities in this subcategory. Pretreatment standards for regulated pollutants are presented based on the selected control and treatment technology.

TECHNICAL APPROACH TO PRETREATMENT

Before proposing and promulgating pretreatment standards, the Agency examines whether the pollutants discharged by the industry pass through the POTW or interfere with the POTW operation or its chosen sludge disposal practices. In determining whether pollutants pass through a well-operated POTW achieving secondary treatment, the Agency compares the percentage of a pollutant removed by POTW with the percentage removed by direct dischargers applying the best available technology economically achievable. A pollutant is deemed to pass through the POTW when the average percentage removed nationwide by well-operated POTW meeting secondary treatment requirements, is less than the percentage removed by direct dischargers complying with BAT effluent limitations guidelines for that pollutant.

This definition of pass-through satisfies the two competing objectives set by Congress that standards for indirect dischargers be equivalent to standards for direct dischargers while at the same time the treatment capability and performance of the POTW be recognized and taken into account in regulating the discharge of pollutants from indirect dischargers.

The Agency compares percentage removal rather than the mass or concentration of pollutants discharged because the latter would not take into account the mass of pollutants discharged to the POTW from non-industrial sources or the dilution of the

pollutants in the POTW effluent to lower concentrations due to the addition of large amounts of non-industrial wastewater.

PRETREATMENT STANDARDS FOR NEW SOURCES

Options for pretreatment of wastewaters from new sources are based on increasing the effectiveness of end-of-pipe treatment technologies. All in-plant changes and applicable end-of-pipe treatment processes have been discussed previously in Sections X and XI. The options for PSNS, therefore' are the same as the BAT options discussed in Section X. The description of each option is presented in Section X.

Treatment technologies considered for the PSNS options are:

OPTION A

- Preliminary treatment with ammonia steam stripping (where required)
- Preliminary treatment with iron co-precipitation
- Chemical precipitation and sedimentation

OPTION B

- Preliminary treatment with ammonia steam stripping (where required)
- Preliminary treatment with iron co-precipitation
- Chemical precipitation and sedimentation
- In-process flow reduction of hydrogen furnace reduction scrubber liquor

OPTION C

- Preliminary treatment with ammonia steam stripping (where required)
- Preliminary treatment with iron co-precipitation
- Chemical precipitation and sedimentation
- In-process flow reduction of hydrogen furnace reduction scrubber liquor
- Multimedia filtration

PSNS OPTION SELECTION

We are promulgating PSNS equal to NSPS and BAT for this subcategory. It is necessary to promulgate PSNS to prevent pass-through of arsenic, lead, nickel, selenium, fluoride, molybdenum, rhenium and ammonia. These priority pollutants are removed by a well-operated POTW achieving secondary treatment at an average of 13 percent, while the NSPS and BAT level technology removes approximately 79 percent.

We believe that the promulgated PSNS are achievable, and that they are not a barrier to entry of new plants into this subcategory.

The wastewater discharge rates for PSNS are identical to the BAT discharge rates for each waste stream. The PSNS discharge rates are shown in Table XII-1.

REGULATED POLLUTANT PARAMETERS

Pollutants selected for limitation, in accordance with the rationale of Sections VI and X, are identical to those selected for limitation for BAT.

PRETREATMENT STANDARDS FOR NEW SOURCES

Pretreatment standards for new sources are based on the treatable concentrations from the selected treatment technology, (Option C), and the discharge rates determined in Section X for BAT. A mass of pollutant per mass of product (mg/kg) allocation is given for each subdivision within the subcategory. This pollutant allocation is based on the product of the treatable concentration from the promulgated treatment (mg/l) and the production normalized wastewater discharge rate (l/kkg). The achievable treatment concentrations for BAT are identical to those for PSNS. See Section IX of this document for a discussion of the molybdenum treatment effectiveness concentration.

Table XII-1

PSNS WASTEWATER DISCHARGE RATES FOR THE PRIMARY MOLYBDENUM AND RHENIUM SUBCATEGORY

Wastewater Stream	PSNS Production Normalized Discharge Rate l/kkg	gal/ton	Production Normalizing Parameter
Molybdenum Sulfide Leachate	463	112	Molybdenum sulfide leached
Roaster SO_2 Scrubber	1,679	404	Molybdenum sulfide roasted
Molybdic Oxide Leachate	11,584	2,782	Molybdenum contained in molybdic oxide leached
Hydrogen Reduction Furnace Scrubber	2,290	551	Molybdenum powder produced
Depleted Rhenium Scrubbing Solution	716	173	Molybdenum sulfide roasted

TABLE XII-2

PSNS FOR THE PRIMARY MOLYBDENUM AND RHENIUM SUBCATEGORY

(a) Molybdenum Sulfide Leachate PSNS

Pollutant or pollutant property	Maximum for any one day	Maximum for monthly average
mg/kg (lb/million lbs) of molybdenum sulfide leached		
*Arsenic	0.644	0.287
Chromium	0.171	0.070
Copper	0.593	0.282
*Lead	0.130	0.060
*Nickel	0.255	0.171
*Selenium	0.380	0.171
Zinc	0.472	0.194
*Ammonia	61.720	27.130
*Fluoride	16.210	9.214
*Molybdenum	Reserved	Reserved
Rhenium	2.329	1.032

(b) Roaster SO_2 Scrubber PSNS

Pollutant or pollutant property	Maximum for any one day	Maximum for monthly average
mg/kg (lb/million lbs) of molybdenum sulfide roasted		
*Arsenic	2.334	1.041
Chromium	0.621	0.252
Copper	2.149	1.024
*Lead	0.470	0.218
*Nickel	0.923	0.621
*Selenium	1.377	0.621
Zinc	1.713	0.705
*Ammonia	223.800	98.390
*Fluoride	58.770	33.410
*Molybdenum	Reserved	Reserved
Rhenium	8.445	3.744

*Regulated Pollutant

TABLE XII-2 (Continued)

PSNS FOR THE PRIMARY MOLYBDENUM AND RHENIUM SUBCATEGORY

(c) Molybdic Oxide Leachate PSNS

Pollutant or pollutant property	Maximum for any one day	Maximum for monthly average
	mg/kg (lb/million lbs) of molybdenum contained in molybdic oxide leached	
*Arsenic	16.100	7.182
Chromium	4.286	1.738
Copper	14.830	7.066
*Lead	3.244	1.506
*Nickel	6.371	4.286
*Selenium	9.499	4.286
Zinc	11.820	4.865
*Ammonia	1,544.000	678.800
*Fluoride	405.400	230.500
*Molybdenum	Reserved	Reserved
Rhenium	58.270	25.830

(d) Hydrogen Reduction Furnace Scrubber PSNS

Pollutant or pollutant property	Maximum for any one day	Maximum for monthly average
	mg/kg (lb/million lbs) of molybdenum powder produced	
*Arsenic	3.183	1.420
Chromium	0.847	0.344
Copper	2.931	1.397
*Lead	0.641	0.298
*Nickel	1.260	0.847
*Selenium	1.878	0.847
Zinc	2.336	0.962
*Ammonia	305.300	134.200
*Fluoride	80.150	45.570
*Molybdenum	Reserved	Reserved
Rhenium	11.520	5.107

*Regulated Pollutant

TABLE XII-2 (Continued)

PSNS FOR THE PRIMARY MOLYBDENUM AND RHENIUM SUBCATEGORY

(e) Depleted Rhenium Scrubbing Solution PSNS

Pollutant or pollutant property	Maximum for any one day	Maximum for monthly average
	mg/kg (lb/million lbs) of molybdenum sulfide roasted	
*Arsenic	0.995	0.444
Chromium	0.265	0.107
Copper	0.916	0.437
*Lead	0.200	0.093
*Nickel	0.394	0.265
*Selenium	0.587	0.265
Zinc	0.730	0.301
*Ammonia	95.440	41.960
*Fluoride	25.060	14.250
*Molybdenum	Reserved	Reserved
Rhenium	3.601	1.597

*Regulated Pollutant

THIS PAGE INTENTIONALLY LEFT BLANK

SECTION XIII

BEST CONVENTIONAL POLLUTANT CONTROL TECHNOLOGY

EPA is not promulgating best conventional pollutant control technology (BCT) limitations for the primary molybdenum and rhenium subcategory at this time.

THIS PAGE INTENTIONALLY LEFT BLANK

NONFERROUS METALS MANUFACTURING POINT SOURCE CATEGORY

DEVELOPMENT DOCUMENT SUPPLEMENT

for the

Secondary Molybdenum and Vanadium Subcategory

William K. Reilly
Administrator

Rebecca Hanmer
Acting Assistant Administrator for Water

Martha Prothro, Director
Office of Water Regulations and Standards

Thomas P. O'Farrell, Director
Industrial Technology Division

Ernst P. Hall, P.E., Chief
Metals Industry Branch
and
Technical Project Officer

May 1989

U.S. Environmental Protection Agency
Office of Water
Office of Water Regulations and Standards
Industrial Technology Division
Washington, D. C. 20460

SECONDARY MOLYBDENUM AND VANADIUM SUBCATEGORY

TABLE OF CONTENTS

Section		Page
I	SUMMARY	3497
II	CONCLUSIONS	3501
III	SUBCATEGORY PROFILE	3511
	Description of Secondary Molybdenum and Vanadium Production	3511
	Raw Materials	3511
	Roasting	3512
	Leaching	3512
	Vanadium Recovery	3512
	Molybdenum Recovery	3513
	Solvent Extraction	3513
	Process Wastewater Sources	3513
	Other Wastewater Sources	3513
	Age, Production, and Process Profile	3514
IV	SUBCATEGORIZATION	3517
	Factors Considered in Subdividing the Secondary Molybdenum and Vanadium Subcategory	3517
	Other Factors	3518
	Production Normalizing Parameters	3518
V	WATER USE AND WASTEWATER CHARACTERISTICS	3521
	Wastewater Flow Rates	3522
	Wastewater Characteristics Data	3522
	Data Collection Portfolios	3523
	Field Sampling Data	3523
	Wastewater Characteristics and Flows by Subdivision	3524
	Leach Tailings	3524
	Molybdenum Filtrate Solvent Extraction Raffinate	3524
	Vanadium Decomposition Wet Air Pollution Control	3525
	Molybdenum Drying Wet Air Pollution Control	3525
	Pure Grade Molybdenum	3525

TABLE OF CONTENTS (Continued)

Section		Page
VI	SELECTION OF POLLUTANTS	3539
	Conventional and Nonconventional Pollutant Parameters	3539
	Conventional and Nonconventional Pollutant Parameters Selected	3539
	Toxic Priority Pollutants	3540
	Toxic Pollutants Never Detected	3541
	Toxic Pollutants Never Found Above Their Analytical Quantification Limit	3541
	Toxic Pollutants Present Below Concentrations Achievable by Treatment	3541
	Toxic Pollutants Detected in a Small Number of Sources	3542
	Toxic Pollutants Selected for Further Consideration in Establishing Limitations and Standards	3543
VII	CONTROL AND TREATMENT TECHNOLOGIES	3549
	Current Control and Treatment Practices	3547
	Leach Tailings	3549
	Molybdenum Filtrate Solvent Extraction Raffinate	3548
	Vanadium Decomposition Wet Air Pollution Control	3548
	Molybdenum Drying Wet Air Pollution Control	3548
	Pure Grade Molybdenum	3548
	Control and Treatment Options	3548
	Option A	3548
	Option C	3549
VIII	COSTS, ENERGY, AND NONWATER QUALITY ASPECTS	3551
	Treatment Options for Existing Sources	3551
	Option A	3551
	Option C	3551
	Cost Methodology	3551
	Nonwater Quality Aspects	3552
	Energy Requirements	3552
	Solid Waste	3552
	Air Pollution	3553

TABLE OF CONTENTS (Continued)

Section		Page
IX	BEST PRACTICABLE CONTROL TECHNOLOGY CURRENTLY AVAILABLE	3557
	Technical Approach to BPT	3557
	Industry Cost and Pollutant Removal Estimates	3559
	BPT Option Selection	3559
	Wastewater Discharge Rates	3560
	Leach Tailings	3560
	Molybdenum Filtrate Solvent Extraction Raffinate	3561
	Vanadium Decomposition Wet Air Pollution Control	3561
	Molybdenum Drying Wet Air Pollution Control	3561
	Pure Grade Molybdenum	3561
	Regulated Pollutant Parameters	3562
	Effluent Limitations	3562
X	BEST AVAILABLE TECHNOLOGY ECONOMICALLY ACHIEVABLE	3571
	Technical Approach to BAT	3571
	Option A	3572
	Option C	3572
	Industry Cost and Pollutant Removal Estimates	3573
	Pollutant Removal Estimates	3573
	Compliance Costs	3573
	BAT Option Selection-Proposal	3573
	BAT Option Selection-Promulgation	3574
	Final Amendments to the Regulation	3574
	Wastewater Discharge Rates	3574
	Regulated Pollutant Parameters	3575
	Effluent Limitations	3575
XI	NEW SOURCE PERFORMANCE STANDARDS	3587
	Technical Approach to NSPS	3587
	NSPS Option Selection Proposal	3588
	NSPS Option Selection Promulgation	3588
	Regulated Pollutant Parameters	3588
	New Source Performance Standards	3588

TABLE OF CONTENTS (Continued)

Section		Page
XII	PRETREATMENT STANDARDS	3595
	Technical Approach to Pretreatment	3595
	Pretreatment Standards for New Sources	3596
	PSNS Option Selection	3596
	Regulated Pollutant Parameters	3597
	Pretreatment Standards for New Sources	3597
XIII	BEST CONVENTIONAL POLLUTANT CONTROL TECHNOLOGY	3603

SECONDARY MOLYBDENUM AND VANADIUM SUBCATEGORY

LIST OF TABLES

Table	Title	Page
V-1	Water Use and Discharge Rates for Leach Tailings	3526
V-2	Water Use and Discharge Rates for Molybdenum Filtrate Solvent Extraction Raffinate	3526
V-3	Water Use and Discharge Rates for Vanadium Decomposition Wet Air Pollution Control	3526
V-4	Water Use and Discharge Rates for Molybdenum Drying Wet Air Pollution Control	3527
V-5	Water Use and Discharge Rates for Pure Grade Molybdenum	3527
V-6	Secondary Molybdenum and Vanadium Subcategory Leach Tailings Raw Wastewater Sampling Data	3528
V-7	Secondary Molybdenum and Vanadium Subcategory Molybdenum Filtrate Solvent Extraction Raffinate Raw Wastewater Sampling Data	3528
V-8	Secondary Molybdenum and Vanadium Subcategory Molybdenum Filtrate Raw Wastewater Sampling Data	3528
V-9	Secondary Molybdenum and Vanadium Subcategory Pond Water Solvent Extraction Raffinate Raw Wastewater Sampling Data	3528
V-10	Secondary Molybdenum and Vanadium Subcategory Sedimentation Effluent Treated Wastewater Sampling Data	3544
VI-1	Toxic Pollutants Never Detected Secondary Molybdenum and Vanadium Subcategory Raw Wastewater	3544
VIII-1	Cost of Compliance for the Secondary Molybdenum and Vanadium Subcategory Direct Dischargers	3536

LIST OF TABLES (Continued)

Table	Title	Page
IX-1	BPT Wastewater Discharge Rates for the Secondary Molybdenum and Vanadium Subcategory	3563
IX-2	BPT Mass Limitations for the Secondary Molybdenum and Vanadium Subcategory	3564
X-1	Pollutant Removal Estimates for Direct Dischargers Secondary Molybdenum and Vanadium Subcategory	3577
X-2	Cost of Compliance for the Secondary Molybdenum and Vanadium Subcategory Direct Dischargers	3578
X-3	BAT Wastewater Discharge Rates for the Secondary Molybdenum and Vanadium Subcategory	3579
X-4	BAT Mass Limitations for the Secondary Molybdenum and Vanadium Subcategory	3580
XI-1	NSPS for the Secondary Molybdenum and Vanadium Subcategory	3590
XII-1	PSNS for the Secondary Molybdenum and Vanadium Subcategory	3598

LIST OF FIGURES

Figure	Title	Page
III-1	Secondary Molybdenum and Vanadium Production Process	
IX-1	BPT Treatment Scheme for Secondary Molybdenum and Vanadium Subcategory	
X-1	BAT Treatment Scheme for Option A	
X-2	BAT Treatment Scheme for Option C	

THIS PAGE INTENTIONALLY LEFT BLANK

SECTION I

SUMMARY

This document provides the technical basis for promulgating effluent limitations based on best practicable technology (BPT) and best available technology (BAT) for existing direct dischargers, pretreatment standards for new indirect dischargers (PSNS), and standards of performance for new source direct dischargers (NSPS) for plants in the secondary molybdenum and vanadium subcategory.

After promulgation of the final effluent limitations and standards for this subcategory (September 20, 1985, 50 FR 38276), industry filed a petition for judicial review of the secondary molybdenum and vanadium subcategory. Industry presented new data and information which formed the basis for a settlement agreement with EPA resolving issues raised by the petitioner. EPA agreed to propose amendments specified in the Settlement Agreement, and after reviewing comments, take final action on these amendments. This settlement agreement concerns the treatment effectiveness values for molybdenum and ammonia, a new building block for pure grade molybdenum, and revised flow allowances for two building blocks. The settlement is detailed in the preamble to the proposed amendment (54 FR 18412, April 28, 1989). This supplement incorporates the changes of the proposal.

Industry requested that information describing their production processes, raw wastewater characteristics and economic data be considered as confidential. Therefore, this supplement does not include much of the technical data upon which the effluent limitations and standards for secondary molybdenum and vanadium are based.

The secondary molybdenum and vanadium subcategory consists of two plants. One plant discharges its process wastewaters directly to a surface water. (EPA has recently learned of the existence of two additional secondary molybdenum and vanadium plants. No information was obtained regarding the discharge status or operations at these additional plants.)

EPA first studied the secondary molybdenum and vanadium subcategory to determine whether differences in raw materials, final products, manufacturing processes, equipment, age and size of plants, or water usage, required the development of separate effluent limitations and standards for different segments of the subcategory. This involved a detailed analysis of wastewater discharge and treated effluent characteristics, including the sources and volume of water used, the processes used, the sources of pollutants and wastewaters in the plant, and the constituents of wastewaters, including priority pollutants. As a result, five subdivisions or building blocks have been identified in this subcategory that warrant separate effluent limitations.

These are listed below.

(a) Leach tailings,
(b) Molybdenum filtrate solvent extraction raffinate,
(c) Vanadium decomposition wet air pollution control,
(d) Molybdenum drying wet air pollution control, and
(e) Pure grade molybdenum

Several distinct control and treatment technologies (both in-plant and end-of-pipe) applicable to the secondary molybdenum and vanadium subcategory were identified. The Agency analyzed both historical and newly generated data on the performance of these technologies, including their nonwater quality environmental impacts and air quality, solid waste generation, and energy requirements. EPA also studied various flow reduction techniques reported in the data collection portfolios (dcp) and plant visits.

Engineering costs were prepared for each of the control and treatment options considered for the subcategory. These costs were then used by the Agency to estimate the impact of implementing the various options on the subcategory. For each control and treatment option that the Agency found to be most effective and technically feasible in controlling the discharge of pollutants, the number of potential closures, number of employees affected, and impact on price were estimated. These results are reported in a separate document entitled "The Economic Impact Analysis of Effluent Limitations and Standards for the Nonferrous Metals Manufacturing Industry."

After examining the various treatment technologies, the Agency has identified BPT to represent the average of the best existing technology. Metals removal based on iron co-precipitation, chemical precipitation and sedimentation technology is the basis for the BPT limitations. Air stripping was selected as the technology basis for ammonia limitations.

For BAT, the Agency has built upon the BPT technology basis by adding filtration as an effluent polishing step to the end-of-pipe treatment scheme.

NSPS is equivalent to BAT. In selecting NSPS, EPA recognizes that new plants have the opportunity to implement the best and most efficient manufacturing processes and treatment technology. As such, the technology basis of BAT has been determined as the best demonstrated technology.

PSES is not being promulgated for this subcategory because there are no existing indirect dischargers in the secondary molybdenum and vanadium subcategory. For PSNS, the Agency selected pretreatment and end-of-pipe treatment techniques equivalent to BAT.

The best conventional technology (BCT) replaces BAT for the control of conventional pollutants. BCT was not promulgated at

the time the regulation was promulgated because the methodology for BCT has not been finalized at that time.

The mass limitations and standards for BPT, BAT, NSPS, and PSNS are presented in Section II.

THIS PAGE INTENTIONALLY LEFT BLANK

SECTION II

CONCLUSIONS

EPA has divided the secondary molybdenum and vanadium subcategory into five subdivisions or building blocks for the purpose of effluent limitations and standards. These subdivisions are:

(a) Leach tailings,

(b) Molybdenum filtrate solvent extraction raffinate,

(c) Vanadium decomposition wet air pollution control,

(d) Molybdenum drying wet air pollution control, and

(e) Pure grade molybdenum.

BPT is promulgated based on the performance achievable by the application of ammonia air stripping pretreatment for removal of ammonia, followed by iron co-precipitation, chemical precipitation and sedimentation technology. The following BPT effluent limitations are promulgated:

(a) Leach Tailings BPT

Pollutant or Pollutant Property	Maximum for Any One Day	Maximum for Monthly Average
mg/kg (lb/million lbs) of technical grade molybdenum plus vanadium plus pure grade molybdenum produced		
Arsenic	40.778	18.145
Chromium	8.585	3.512
Lead	8.195	3.902
Nickel	37.460	24.779
Iron	23.410	11.902
Molybdenum	Reserved	Reserved
Ammonia (as N)	8078.000	3551.000
TSS	799.950	380.460
pH	Within the range of 7.5 to 10.0 at all times	

(b) Molybdenum Filtrate Solvent Extraction Raffinate BPT

Pollutant or Pollutant Property	Maximum for Any One Day	Maximum for Monthly Average
mg/kg (lb/million lbs) of technical grade molybdenum plus vanadium plus pure grade molybdenum produced		
Arsenic	121.720	54.162
Chromium	25.625	10.483
Lead	24.460	11.648
Nickel	111.819	73.964
Iron	69.887	35.526
Molybdenum	Reserved	Reserved
Ammonia (as N)	24114.000	10600.000
TSS	2387.800	1135.660
pH	Within the range of 7.5 to 10.0 at all times	

(c) Vanadium Decomposition Wet Air Pollution Control BPT

Pollutant or Pollutant Property	Maximum for Any One Day	Maximum for Monthly Average
mg/kg (lb/million lbs) of vanadium produced by decomposition		
Arsenic	0.000	0.000
Chromium	0.000	0.000
Lead	0.000	0.000
Nickel	0.000	0.000
Iron	0.000	0.000
Molybdenum	0.000	0.000
Ammonia (as N)	0.000	0.000
TSS	0.000	0.000
pH	Within the range of 7.5 to 10.0 at all times	

(d) Molybdenum Drying Wet Air Pollution Control BPT

Pollutant or Pollutant Property	Maximum for Any One Day	Maximum for Monthly Average
mg/kg (lb/million lbs) of molybdenum produced		
Arsenic	0.000	0.000
Chromium	0.000	0.000
Lead	0.000	0.000
Nickel	0.000	0.000
Iron	0.000	0.000
Molybdenum	0.000	0.000
Ammonia (as N)	0.000	0.000
TSS	0.000	0.000
pH	Within the range of 7.5 to 10.0 at all times	

(e) Pure Grade Molybdenum BPT

Pollutant or Pollutant Property	Maximum for Any One Day	Maximum for Monthly Average
mg/kg (lb/million lbs) of pure molybdenum produced		
Arsenic	48.655	21.650
Chromium	10.243	4.190
Lead	9.778	4.656
Nickel	44.698	29.566
Iron	27.936	14.201
Molybdenum	Reserved	Reserved
Ammonia (as N)	9638.000	4237.000
TSS	954.480	453.960
pH	Within the range of 7.5 to 10.0 at all times	

BAT is promulgated based on the performance achievable by the application of ammonia air stripping, iron co-precipitation, chemical precipitation, sedimentation, and multimedia filtration technology. The following BAT effluent limitations are promulgated:

(a) Leach Tailings BAT

Pollutant or Pollutant Property	Maximum for Any One Day	Maximum for Monthly Average
mg/kg (lb/million lbs) of technical grade molybdenum plus vanadium plus pure grade molybdenum produced		
Arsenic	27.120	12.097
Chromium	7.219	2.927
Lead	5.463	2.536
Nickel	10.731	7.219
Iron	22.413	11.902
Molybdenum	Reserved	Reserved
Ammonia (as N)	8078.000	4237.000

(b) Molybdenum Filtrate Solvent Extraction Raffinate BAT

Pollutant or Pollutant Property	Maximum for Any One Day	Maximum for Monthly Average
mg/kg (lb/million lbs) of technical grade molybdenum plus vanadium plus pure grade molybdenum produced		
Arsenic	80.952	36.108
Chromium	21.548	8.736
Lead	16.306	7.571
Nickel	32.031	21.548
Iron	69.887	35.526
Molybdenum	Reserved	Reserved
Ammonia	24114.000	10600.000

(c) Vanadium Decomposition Wet Air Pollution Control BAT

Pollutant or Pollutant Property	Maximum for Any One Day	Maximum for Monthly Average
mg/kg (lb/million lbs) of vanadium produced by decomposition		
Arsenic	0.000	0.000
Chromium	0.000	0.000
Lead	0.000	0.000
Nickel	0.000	0.000
Iron	0.000	0.000
Molybdenum	0.000	0.000
Ammonia (as N)	0.000	0.000

(d) Molybdenum Drying Wet Air Pollution Control BAT

Pollutant or Pollutant Property	Maximum for Any One Day	Maximum for Monthly Average
mg/kg (lb/million lbs) of molybdenum produced		
Arsenic	0.000	0.000
Chromium	0.000	0.000
Lead	0.000	0.000
Nickel	0.000	0.000
Iron	0.000	0.000
Molybdenum	0.000	0.000
Ammonia (as N)	0.000	0.000

(e) Pure Grade Molybdenum BAT

Pollutant or Pollutant Property	Maximum for Any One Day	Maximum for Monthly Average
mg/kg (lb/million lbs) of pure molybdenum produced		
Arsenic	32.359	14.434
Chromium	8.614	3.492
Lead	6.518	3.026
Nickel	12.804	8.614
Iron	27.936	14.201
Molybdenum	Reserved	Reserved
Ammonia (as N)	9638.000	4237.000

NSPS are promulgated based on the performance achievable by the application of ammonia air stripping, iron co-precipitation, chemical precipitation, sedimentation, and multimedia filtration technology. The following effluent standards are promulgated for new sources:

(a) Leach Tailings NSPS

Pollutant or Pollutant Property	Maximum for Any One Day	Maximum for Monthly Average
mg/kg (lb/million lbs) of technical grade molybdenum plus vanadium plus pure grade molybdenum produced		
Arsenic	27.120	12.097
Chromium	7.210	2.927
Lead	5.463	2.536
Nickel	10.731	7.219
Iron	23.413	11.902
Molybdenum	Reserved	Reserved
Ammonia (as N)	8078.000	3551.000
TSS	292.665	234.132
pH	Within the range of 7.5 to 10.0 at all times	

(b) Molybdenum Filtrate Solvent Extraction Raffinate NSPS

Pollutant or Pollutant Property	Maximum for Any One Day	Maximum for Monthly Average
mg/kg (lb/million lbs) of technical grade molybdenum plus vanadium plus pure grade molybdenum produced		
Arsenic	80.952	36.108
Chromium	21.548	8.736
Lead	16.308	7.571
Nickel	32.031	21.548
Iron	69.887	35.526
Molybdenum	Reserved	Reserved
Ammonia (as N)	24114.000	10600.000
TSS	873.585	698.868
pH	Within the range of 7.5 to 10.0 at all times	

(c) Vanadium Decomposition Wet Air Pollution Control NSPS

Pollutant or Pollutant Property	Maximum for Any One Day	Maximum for Monthly Average
mg/kg (lb/million lbs) of vanadium produced by decomposition		
Arsenic	0.000	0.000
Chromium	0.000	0.000
Lead	0.000	0.000
Nickel	0.000	0.000
Iron	0.000	0.000
Molybdenum	0.000	0.000
Ammonia (as N)	0.000	0.000
TSS	0.000	0.000
pH	Within the range of 7.5 to 10.0 at all times	

(d) Molybdenum Drying Wet Air Pollution Control NSPS

Pollutant or Pollutant Property	Maximum for Any One Day	Maximum for Monthly Average
mg/kg (lb/million lbs) of molybdenum produced		
Arsenic	0.000	0.000
Chromium	0.000	0.000
Lead	0.000	0.000
Nickel	0.000	0.000
Iron	0.000	0.000
Molybdenum	0.000	0.000
Ammonia (as N)	0.000	0.000
TSS	0.000	0.000
pH	Within the range of 7.5 to 10.0 at all times	

(e) Pure Grade Molybdenum NSPS

Pollutant or Pollutant Property	Maximum for Any One Day	Maximum for Monthly Average
mg/kg (pounds per million pounds) of pure molybdenum produced		
Arsenic	32.359	14.434
Chromium	8.614	3.492
Lead	6.518	3.026
Nickel	12.804	8.614
Iron	27.936	14.201
Molybdenum	Reserved	Reserved
Ammonia (as N)	9638.000	4237.000
TSS	349.200	279.360
pH	With the range of 7.5 to 10.0 at all times	

PSES are not being promulgated for this subcategory at this time because there are no existing indirect dischargers in the secondary molybdenum and vanadium subcategory.

PSNS are promulgated based on the performance achievable by the application of ammonia air stripping, iron co-precipitation, chemical precipitation, sedimentation, and multimedia filtration technology. The following pretreatment standards are promulgated for new sources:

(a) Leach Tailings PSNS

Pollutant or Pollutant Property	Maximum for Any One Day	Maximum for Monthly Average
mg/kg (lb/million lbs) of technical grade molybdenum plus vanadium plus pure grade molybdenum produced		
Arsenic	27.120	12.097
Chromium	7.219	2.927
Lead	5.463	2.536
Nickel	10.731	7.219
Iron	23.413	11.902
Molybdenum	Reserved	Reserved
Ammonia (as N)	8078.000	3551,000

(b) Molybdenum Filtrate Solvent Extraction Raffinate PSNS

Pollutant or Pollutant Property	Maximum for Any One Day	Maximum for Monthly Average
mg/kg (lb/million lbs) of technical grade molybdenum plus vanadium plus pure grade molybdenum produced		
Arsenic	80.952	36.108
Chromium	21.548	8.736
Lead	16.306	7.571
Nickel	32.031	21.548
Iron	69.887	35.526
Molybdenum	Reserved	Reserved
Ammonia (as N)	24114.000	10600.000

(c) Vanadium Decomposition Wet Air Pollution Control PSNS

Pollutant or Pollutant Property	Maximum for Any One Day	Maximum for Monthly Average
mg/kg (lb/million lbs) of vanadium produced by decomposition		
Arsenic	0.000	0.000
Chromium	0.000	0.000
Lead	0.000	0.000
Nickel	0.000	0.000
Iron	0.000	0.000
Molybdenum	0.000	0.000
Ammonia (as N)	0.000	0.000

(d) Molybdenum Drying Wet Air Pollution Control PSNS

Pollutant or Pollutant Property	Maximum for Any One Day	Maximum for Monthly Average
mg/kg (lb/million lbs) of molybdenum produced		
Arsenic	0.000	0.000
Chromium	0.000	0.000
Lead	0.000	0.000
Nickel	0.000	0.000
Iron	0.000	0.000
Molybdenum	0.000	0.000
Ammonia (as N)	0.000	0.000

(e) Pure Grade Molybdenum PSNS

Pollutant or Pollutant Property	Maximum for Any One Day	Maximum for Monthly Average
mg/kg (lb/million lbs) of pure molybdenum produced		
Arsenic	32.359	14.434
Chromium	8.614	3.492
Lead	6.518	3.026
Nickel	12.804	8.614
Iron	27.936	14.201
Molybdenum	Reserved	Reserved
Ammonia (as N)	9638.000	4237.000

EPA is not promulgating BCT at this time for the secondary molybdenum and vanadium subcategory.

THIS PAGE INTENTIONALLY LEFT BLANK

SECTION III

SUBCATEGORY PROFILE

This section of the secondary molybdenum and vanadium supplement describes the raw materials and processes used in refining secondary molybdenum and vanadium and presents a profile of the secondary molybdenum and vanadium plants identified in this study.

Molybdenum is used primarily as an alloying agent in steel and in other metallurgical applications. Molybdenum's predominant use in metallurgy stems from its high hot strength and corrosion resistant characteristics. Molybdenum in steel, ferroalloys, and nonferrous alloys increases wear resistance, strength, and toughness much like other common alloying elements, however, it also imparts the unique properties of hot strength and corrosion resistance as well. Molybdenum compounds are widely used in applications as principal catalysts, in the manufacture of colored pigments for dyeing and ceramics glazing, and as lubricants and soluble corrosion inhibitors for aqueous and select organic solutions.

Like molybdenum, the most important use of vanadium is as an alloying agent in steel. The addition of vanadium increases hardenability and grain refinement in steel which yields greater toughness and impact resistance. High temperature strength and wear resistance are also favorable properties imparted by vanadium. Such alloys are used for aircraft engines and turbine blades where high-temperature creep resistance is a requirement; these properties are also increasing interest in vanadium as a fuel-element cladding for fast-breeder reactors. Vanadium compounds are key industrial catalysts for both organic and inorganic reactions. Oxides of vanadium added to glass in small quantities filter harmful ultraviolet radiation from natural light.

DESCRIPTION OF SECONDARY MOLYBDENUM AND VANADIUM PRODUCTION

Secondary molybdenum and vanadium production involves five basic process steps: roasting, leaching, vanadium recovery, molybdenum recovery, and solvent extraction. The five basic processes are shown schematically in Figure III-1 (page 3515) and are described below.

RAW MATERIALS

Spent hydrodesulfurization (HDS) catalysts are used as raw materials for secondary molybdenum and vanadium production. The catalysts become spent or inactive when they are exhausted through extended use or contaminated with impurities, or some combination of both factors. Impurities which may contaminate or deactivate HDS catalysts include heavy metals such as lead,

nickel, vanadium or other metals depending on the specific catalyst and its use.

HDS catalysts are generally composed of a substrate such as sand (silicates) or zeolite, coated with active substances such as molybdenum, precious metals, and others. Catalysts are used for different applications and each application requires a specific catalytic composition. The mass of molybdenum and vanadium in a spent catalyst is usually small (<12 percent) compared with the total mass of the catalyst.

ROASTING

The first step in recovering molybdenum and vanadium from spent HDS catalysts is to roast the catalysts in a furnace. Sodium carbonate (Na_2CO_3) may be added to the furnace. Off-gases from the roasting furnace, containing dust and particulates, are controlled by an electrostatic precipitator prior to discharging to the atmosphere. The solids collected in the precipitator may be returned to the roaster.

Catalysts are roasted to burn off carbonaceous material, such as residual oil, sulfur and other combustible residues remaining on the catalysts. Roasting converts the molybdenum and vanadium metals to their sodium salts.

LEACHING

After roasting, the calcine is quenched, ground and leached with water. The leaching process produces a pregnant liquor containing molybdenum and vanadium values which is sent on for further processing. The barren leach tailings are separated from the solution by countercurrent decantation and discharged as a waste stream to a tailings pond for additional settling. The supernatant from the tailings pond is recovered and routed to solvent extraction.

VANADIUM RECOVERY

The initial step of vanadium recovery is removal of phosphorus by precipitation as insoluble magnesium phosphates. Aluminum, if it is present in solution, is removed as the hydroxide by acidification followed by filtration. Vanadium is then precipitated as ammonium metavanadate (AMV) with excess NH_4Cl, and is separated from the liquid phase by filtration. Molybdenum does not precipitate and the molybdenum-rich filtrate is routed to the molybdenum recovery process.

The ammonium metavanadate produced by the NH_4Cl precipitation is calcined and fused to produce vanadium pentoxide. Other vanadium products include a solution of sodium ammonium vanadate and potassium metavanadate solutions both of which are used in the preparation of new catalysts. The off-gases from the calcine furnace are controlled with a dry baghouse which recovers the dust and particulates. In series with the baghouse is a wet

scrubber employing a dilute hydrochloric acid solution as the scrubbing medium. The scrubber liquor is routed to the ammonia recovery and reuse system. There are no wastewater streams discharged from the vanadium products manufacturing processes.

MOLYBDENUM RECOVERY

Molybdenum is recovered from the pregnant solution by heating and acidification to produce molybdic acid (H_2MoO_4), using hydrochloric acid and steam. Molybdic acid solids are recovered on a filter and washed with dilute hydrochloric acid. The filtrate from this step is returned to the process.

Both technical grade and high purity molybdic oxide are produced from molybdic acid. Molybdic acid is calcined to produce technical grade molybdic oxide (93-96 % MoO_3). There is a scrubber controlling off-gases from this kiln. Spent liquor from this scrubber is returned to the process.

Pure (99.8 percent) molybdic oxide is also produced from molybdic acid. Molybdic acid is dissolved in ammonia water, purified, reprecipitated and calcined to pure oxide containing a minimum of 99.8 percent MoO_3.

SOLVENT EXTRACTION

Molybdenum filtrate and supernatant from the tailings pond (containing leach tailings as well as stormwater runoff) are routed through solvent extraction to recover molybdenum and vanadium values prior to discharge to treatment. In the solvent extraction process a reagent containing fatty quarternary amines and kerosene is used to effect this recovery. The molybdenum and vanadium-rich stream from this recovery step is returned to the main process just prior to precipitating the vanadium from solution. The molybdenum filtrate and pond water raffinates from the solvent extraction process are discharged to wastewater treatment.

PROCESS WASTEWATER SOURCES

The significant wastewater sources associated with the secondary molybdenum and vanadium subcategory are as follows:

1. Leach tailings,
2. Molybdenum filtrate solvent extraction raffinate,
3. Vanadium decomposition wet air pollution control,
4. Molybdenum drying wet air pollution control, and
5. Pure grade molybdenum.

OTHER WASTEWATER SOURCE

There are other wastewater stream associated with the production of secondary molybdenum and vanadium. These streams may include maintenance and cleanup water, and stormwater runoff. These wastewaters are not considered as part of this rulemaking. EPA

believes that the flow and pollutant loadings associated with these streams are insignificant relative to the waste streams selected and are best handled by the appropriate permit authority on a case-by-case basis under authority of Section 403(a) of the Clean Water Act.

AGE, PRODUCTION, AND PROCESS PROFILE

One secondary molybdenum and vanadium plant in the United States is located in southern Texas. It is a direct discharge facility, and was built in 1973. The production of molybdenum is slightly less than 1000 tons per year contained in the MoO_3 product, and production of vanadium is less than 500 tons per year contained in V_2O_5 product.

After concluding the settlement agreement for this subcategory, EPA learned of the probable existence of two additional molybdenum and vanadium recovery facilities. No substantial technical information is available on these facilities.

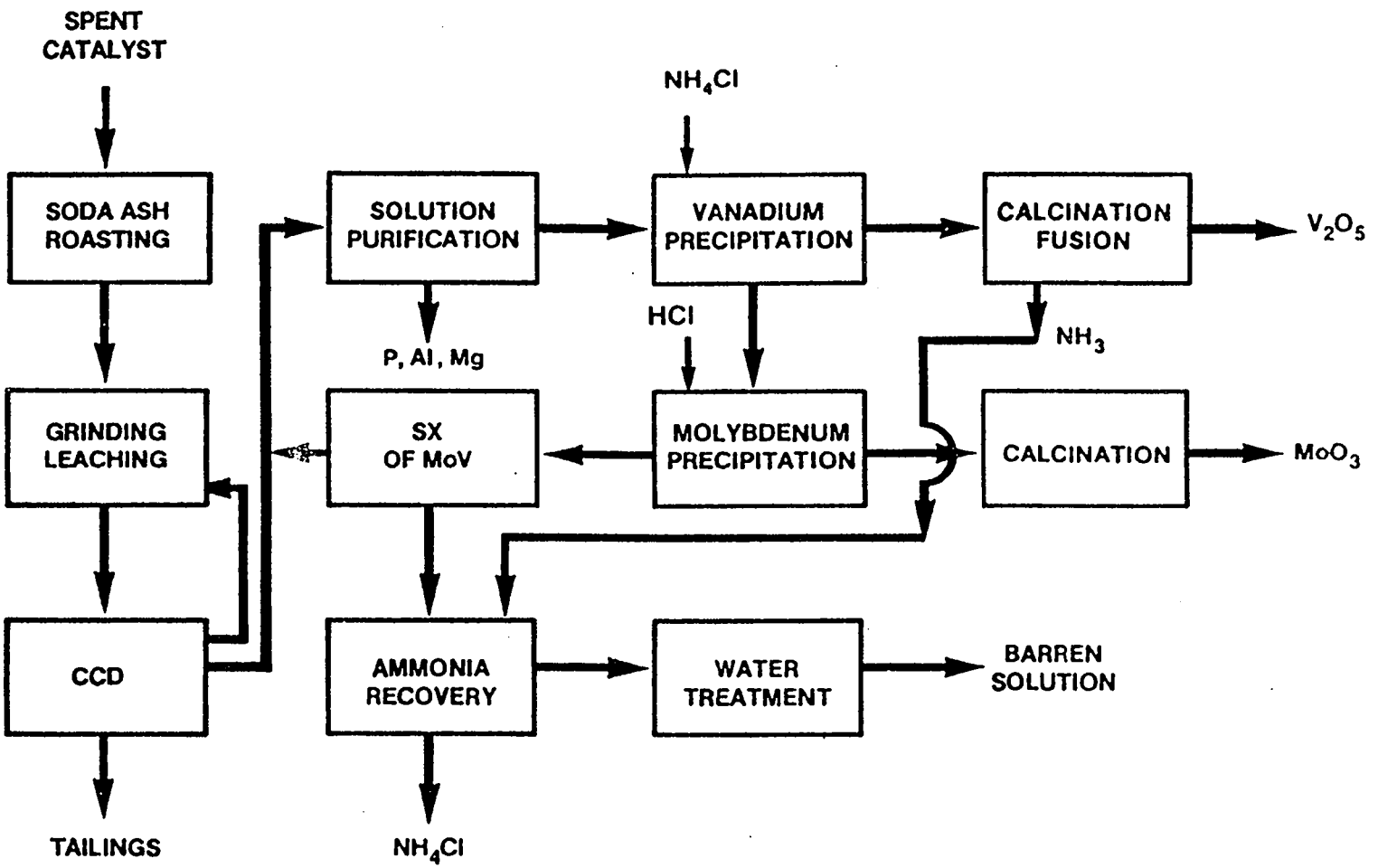

FIGURE III-1

SECONDARY MOLYBDENUM AND VANADIUM PRODUCTION PROCESSES

THIS PAGE INTENTIONALLY LEFT BLANK

SECTION IV

SUBCATEGORIZATION

This section summarizes the factors considered during the designation of the subdivisions or building blocks in the secondary molybdenum and vanadium subcategory.

FACTORS CONSIDERED IN SUBDIVIDING THE SECONDARY MOLYBDENUM AND VANADIUM SUBCATEGORY

The factors listed for general subcategorization were each evaluated when considering subdivision of the secondary molybdenum and vanadium subcategory. In the discussion that follows, the factors will be described as they pertain to this particular subcategory.

The rationale for considering segmentation of the secondary molybdenum and vanadium subcategory is based primarily on differences in the production processes and raw materials used. Within this subcategory, a number of different operations are performed, which may or may not have a water use or discharge, and which may require the establishment of separate effluent limitations. While secondary molybdenum and vanadium is considered a single subcategory, a more thorough examination of the production processes has illustrated the need for limitations and standards based on specific flow allowances for the following subdivisions:

(a). Leach tailings,
(b). Molybdenum filtrate solvent extraction raffinate,
(c). Vanadium decomposition wet air pollution control,
(d). Molybdenum drying wet air pollution control, and
(e). Pure grade molybdenum.

These subdivisions follow directly from differences within several of the production stages of secondary molybdenum and vanadium: leaching of calcined raw material, and recovery and purification of molybdenum and vanadium products. The other production stages, roasting of spent catalysts and vanadium recovery, do not generate a need for subdivisions because no process wastewater is generated.

Leaching of calcined raw material gives rise to the first subdivision, leach tailings. The calcined raw material is leached with water, and the solution containing molybdenum and vanadium is sent on for further processing. The inerts and other impurities are discharged to a tailings pond. The tailings pond overflow is discharged as a waste stream after solvent extraction for molybdenum and vanadium recovery.

Recovery and purification of molybdenum and vanadium products creates the need for the remaining four subdivisions: molybdenum

filtrate solvent extraction raffinate, vanadium decomposition scrubber, molybdenum drying scrubber, and pure grade molybdenum wastewater.

The vanadium precipitate produced in the molybdenum-vanadium separation process may be decomposed to vanadium oxide in a decomposition furnace. The wet air pollution control associated with this furnace creates the need for the vanadium decomposition scrubber subdivision.

OTHER FACTORS

The other factors considered in this evaluation were shown to be inappropriate bases for subdivision. Air pollution control methods, treatment costs, and total energy requirements are functions of the selected subcategorization factors -- metal product, raw materials, and production processes. Therefore, they are not independent factors and do not affect the subcategorization which has been applied.

PRODUCTION NORMALIZING PARAMETERS

As discussed previously, the effluent limitations and standards developed in this document establish mass limitations on the discharge of specific pollutant parameters. To allow these regulations to be applied to plants with various production capacities, the mass of pollutant discharged must be related to a unit of production. This factor is known as the production normalizing parameter (PNP).

In general, for each production process which has a wastewater associated with it, the actual mass of molybdenum and vanadium product or intermediate produced will be used as the PNP. Thus, the PNPs for the five subdivisions are as follows:

Building Block	PNP
1. Leach tailings	kkg of technical grade molybdenum plus vanadium plus pure grade molybdenum produced
2. Molybdenum filtrate solvent extraction raffinate	kkg of technical grade molybdenum plus vanadium plus pure grade molybdenum produced
3. Vanadium decomposition wet air pollution control	kkg of vanadium produced by decomposition
4. Molybdenum drying wet air pollution control	kkg of molybdenum produced

5. Pure grade molybdenum kkg of pure molybdenum produced

Other PNPs were considered. The use of production capacity or raw material processed instead of actual production was eliminated from consideration because the mass of the pollutant produced is more a function of true production than of installed capacity or raw material processed.

THIS PAGE INTENTIONALLY LEFT BLANK

SECTION V

WATER USE AND WASTEWATER CHARACTERISTICS

This section describes the characteristics of wastewater associated with the secondary molybdenum and vanadium subcategory. Data used to quantify wastewater flow and pollutant concentrations are presented, summarized, and discussed. The contribution of specific production processes to the overall wastewater discharge from secondary molybdenum and vanadium plants is identified whenever possible.

The two principal data sources used are data collection portfolios (dcp) and field sampling results. Data collection portfolios, completed for one of the secondary molybdenum and vanadium plants, contained information regarding wastewater flows and production levels.

In order to quantify the pollutant discharge from secondary molybdenum and vanadium plants, a field sampling program was conducted. The field sampling program was conducted following proposal. A complete list of the pollutants considered and a summary of the techniques used in sampling and laboratory analyses are included in Section V of the General Development Document. Samples were analyzed for 124 of the 126 priority pollutants and other pollutants deemed appropriate. Because the analytical standard for TCDD was judged to be too hazardous to be made generally available, samples were never analyzed for this pollutant. There is no reason to expect that TCDD would be present in nonferrous metals manufacturing wastewater. Asbestos was not analyzed for, nor is there any reason to expect that asbestos would be present in secondary molybdenum and vanadium wastewater. In general, the samples were analyzed for three classes of pollutants: priority organic pollutants, priority metal pollutants and criteria pollutants (which includes conventional and nonconventional pollutants).

Additional wastewater characteristics and flow and production data were obtained by the Agency following proposal through a field sampling visit to one facility. As described in Section IV of this supplement, secondary molybdenum and vanadium plants have been subdivided into five subdivisions or wastewater sources, so that the promulgated regulation contains mass discharge limitations and standards for five building blocks discharging process wastewater. Differences in the wastewater characteristics associated with these subdivisions are to be expected. For this reason, wastewater streams corresponding to each subdivision are addressed separately in the discussions that follow. These wastewater sources are:

(a). Leach tailings,
(b). Molybdenum filtrate solvent extraction raffinate,
(c). Vanadium decomposition wet air pollution control,
(d). Molybdenum drying wet air pollution control, and
(e). Pure grade molybdenum.

WASTEWATER FLOW RATES

Data supplied by data collection portfolio responses were evaluated, and two flow-to-production ratios were calculated for each stream. The two ratios, water use and wastewater discharge flow, are differentiated by the flow value used in calculation. Water use is defined as the volume of water or other fluid (e.g., emulsions, lubricants) required for a given process per mass of molybdenum and vanadium product and is therefore based on the sum of recycle and make-up flows to a given process. Wastewater flow discharged after pretreatment or recycle (if these are used) is used in calculating the production normalized flow--the volume of wastewater discharged from a given process to further treatment, disposal, or discharge per mass of molybdenum and vanadium produced. Differences between the water use and wastewater flows associated with a given stream result from recycle, evaporation, and carry-over on the product. The production values in calculation correspond to the production normalizing parameter, PNP, assigned to each stream, as outlined in Section IV.

As an example, molybdenum filtrate solvent extraction raffinate wastewater flow is related to the production of molybdenum and vanadium. As such, the discharge rate is expressed in liters of molybdenum filtrate solvent extraction raffinate per metric ton of technical grade molybdenum plus vanadium plus pure grade molybdenum produced (gallons of molybdenum filtrate solvent extraction raffinate wastewater per ton of technical grade molybdenum plus vanadium plus pure grade molybdenum produced).

The production normalized flows were compiled by stream type The reported water use and discharge rates for the identified secondary molybdenum and vanadium wet operations are given in Tables V-1 through V-5 (pages 3526 - 3527). Where appropriate, an attempt was made to identify factors that could account for variations in water use and discharge rates. This information is summarized in this section. A similar analysis of factors affecting the wastewater values is presented in Sections IX, X, XI, and XII, where representative BPT, BAT, NSPS, and pretreatment discharge flows are selected for use in calculating the effluent limitations and standards.

The water use and discharge rates shown do not include nonprocess wastewater, such as rainfall runoff and noncontact cooling water.

WASTEWATER CHARACTERISTICS DATA

Data used to characterize the various wastewaters associated with

secondary molybdenum and vanadium production come from two sources -- data collection portfolios and analytical data from field sampling.

DATA COLLECTION PORTFOLIOS

In the data collection portfolios, plants were asked to specify the presence of any of the priority pollutants in their effluent. None of the plants that responded to this portion of the questionnaire indicated the presence of priority organic pollutants.

The responses for the priority metals are shown below.

Pollutant	Known Present	Believed Present
Antimony	1	0
Arsenic	1	0
Beryllium	1	0
Cadmium	1	0
Chromium	1	0
Copper	1	0
Lead	1	0
Mercury	0	0
Nickel	1	1
Selenium	0	0
Silver	0	0
Thallium	0	0
Zinc	1	0

FIELD SAMPLING DATA

In order to quantify the concentrations of pollutants present in wastewater from secondary molybdenum and vanadium plants, wastewater samples were collected at one plant.

Raw wastewater data (Tables V-6 through V-9) are not presented in this document because they have been claimed confidential by the sampled facility. The treated wastewater sampling data for the facility are presented in Table V-10 (page 3536). Where no data are listed for a specific day of sampling, the wastewater samples for the stream were not collected.

Several points regarding the data tables should be noted. First, the detection limits shown on the data tables for priority metals and conventional and nonconventional pollutants are not the same in all cases as the published detection limits for these pollutants by the same analytical methods. The detection limits used were reported with the analytical data and hence are the appropriate limits to apply to the data. Detection limit variation can occur as a result of a number of laboratory- specific, equipment-specific, and daily

operator-specific factors. These factors can include day-to-day differences in machine calibration, variation in stock solutions, and variation in operators.

Second, the statistical analysis of data includes some samples measured at concentrations considered not quantifiable. For data considered as detected but below quantifiable concentrations, a value of zero is used for averaging. Nonconventional and conventional pollutant data reported with a "less than" sign are considered as detected, but not further quantifiable. A value of zero is also used for averaging. If a pollutant is reported as not detected, it is assigned a value of zero in calculating the average. Finally, priority metal values reported as less than a certain value were considered as not quantifiable, and consequently were assigned a value of zero in the calculation of the average.

Appropriate source water concentrations are presented with the summaries of the sampling data.

WASTEWATER CHARACTERISTICS AND FLOWS BY SUBDIVISION

Since the secondary molybdenum and vanadium subcategory has been divided into five subdivisions, and the waste stream from each subdivision has potentially different characteristics and flows, the wastewater characteristics and discharge rates corresponding to each subdivision will be described separately.

LEACH TAILINGS

The calcined product from the roasting furnace is quenched, ground and leached with water to dissolve molybdenum and vanadium. The product from leaching is a solution containing molybdenum and vanadium. Leaching also creates tailings which are discharged to a tailings pond. The overflow from the tailings pond is discharged as a waste stream after solvent extraction. One plant generates a leach tailings waste stream, and its water use and discharge rates are presented in Table V-1 (page 3526), based on data reported in the dcp.

The data for leach tailings are not presented in this document because their have been claimed confidential by the sampled facility.

MOLYBDENUM FILTRATE SOLVENT EXTRACTION RAFFINATE

After vanadium precipitation and filtration, molybdenum may be recovered from the vanadium free solution by precipitation as molybdic acid. The depleted solution is filtered away and the molybdic acid solids are washed with water. The combined depleted solution and wash water is treated with solvent extraction to recover additional product. One plant generates a molybdenum filtrate solvent extraction raffinate waste stream, and its water use and discharge rates are presented in Table V-2 (page 3526), based on data gathered during a

sampling visit.

The date for molybdenum filtrate solvent extraction raffinate are not presented in this document because they have been claimed confidential by the sampled facility.

VANADIUM DECOMPOSITION WET AIR POLLUTION CONTROL

Vanadium solids produced in the molybdenum-vanadium separation step may be decomposed in a furnace to vanadium oxide. Off-gases from the decomposition furnace may be controlled with a scrubber with a wastewater discharge. One plant reported having a scrubber, but reuses all of the scrubber liquor in a co-product recovery operation. The water use and discharge rates for vanadium decomposition wet air pollution control are presented in Table V-3 (page 3526).

The date for vanadium decomposition wet air pollution control is not presented in this document because they have been claimed confidential by the sampled facility.

MOLYBDENUM DRYING WET AIR POLLUTION CONTROL

Molybdic acid produced in the molybdenum recovery operation may be converted to technical grade molybdenum trioxide in a drying furnace. A wet scrubber may be used to control emissions from this process, and the scrubber liquor reused in the manufacturing process. The water use and discharge rates for molybdenum drying wet air pollution control are presented in Table V-4 (page 3527).

The chemical analysis date for molybdenum drying wet air pollution control are not presented in this document because they have been claimed confidential by the sampled facility.

PURE GRADE MOLYBDENUM

As a result of new information made available after promulgation of the regulation, EPA agreed to establish a new building block for pure grade molybdenum wastewater for this subcategory. This building block was not included in the promulgated rule because the wastewater from this operation was included as part of the flow from the molybdenum filtrate solvent extraction building block. The new information indicated that the pure grade molybdenum process and the molybdenum solvent extraction operations are not directly linked as the Agency had believed. This new building block would apply to the production of pure grade molybdenum from commercial grade molybdenum and as shown in Table V-5 (page 3527) is based on a production normalized flow of 23,280 l/kkg of pure molybdenum produced.

TABLE V-1

WATER USE AND DISCHARGE RATES FOR LEACH TAILINGS

(l/kkg of technical grade molybdenum plus pure grade molybdenum plus vanadium produced)

Plant Code	Percent Recycle or Reuse	Production Normalized Water Use Flow	Production Normalized Discharge Flow
1119	0	19511	19511

TABLE V-2

WATER USE AND DISCHARGE RATES FOR MOLYBDENUM FILTRATE SOLVENT EXTRACTION RAFFINATE

(l/kkg of technical grade molybdenum plus pure grade molybdenum plus vanadium produced)

Plant Code	Percent Recycle or Reuse	Production Normalized Water Use Flow	Production Normalized Discharge Flow
1119	0	58239	58239

Table V-3

WATER USE AND DISCHARGE RATES FOR VANADIUM DECOMPOSITION WET AIR POLLUTION CONTROL

(l/kkg of vanadium produced by decomposition)

Plant Code	Percent Recycle or Reuse	Production Normalized Water Use Flow	Production Normalized Discharge Flow
1119	100	27900	0

TABLE V-4

WATER USE AND DISCHARGE RATES FOR
MOLYBDENUM DRYING WET AIR POLLUTION CONTROL

(l/kkg of molybdenum produced)

Plant Code	Percent Recycle or Reuse	Production Normalized Water Use Flow	Production Normalized Discharge Flow
1119	100	629	0

TABLE V-5

WATER USE AND DISCHARGE RATES FOR
PURE GRADE MOLYBDENUM

(l/kkg of pure grade molybdenum produced)

Plant Code	Percent Recycle or Reuse	Production Normalized Water Use Flow	Production Normalized Discharge Flow
1119	0	23280	23280

TABLE V-6

SECONDARY MOLYBDENUM AND VANADIUM SUBCATEGORY
RAW WASTEWATER SAMPLING DATA
LEACH TAILINGS

Pollutant	Stream Code	Sample Type	Source	Concentrations (mg/l) Day-1	Day-2	Day-3

These data have been claimed as confidential business information.

TABLE V-7

SECONDARY MOLYBDENUM AND VANADIUM SUBCATEGORY
RAW WASTEWATER SAMPLING DATA
MOLYBDENUM FILTRATE SOLVENT EXTRACTION RAFFINATE

Pollutant	Stream Code	Sample Type	Source	Concentrations (mg/l) Day-1	Day-2	Day-3

These data have been claimed as confidential business information.

TABLE V-8

SECONDARY MOLYBDENUM AND VANADIUM SUBCATEGORY
RAW WASTEWATER SAMPLING DATA
MOLYBDENUM FILTRATE

Pollutant	Stream Code	Sample Type	Source	Concentrations (mg/l) Day-1	Day-2	Day-3

These data have been claimed as confidential business information.

TABLE V-9

SECONDARY MOLYBDENUM AND VANADIUM SUBCATEGORY
RAW WASTEWATER SAMPLING DATA
POND WATER SOLVENT EXTRACTION RAFFINATE

Pollutant	Stream Code	Sample Type	Source	Concentrations (mg/l) Day-1	Day-2	Day-3

These data have been claimed as confidential business information.

TABLE V-10

SECONDARY MOLYBDENUM AND VANADIUM SUBCATEGORY
SEDIMENTATION EFFLUENT
TREATED WASTEWATER SAMPLING DATA

Pollutant	Stream Code	Sample Type†	Concentrations (mg/l) Source	Day 1	Day 2	Day 3
Toxic Pollutants						
1. acenaphthene	388	6	ND	ND		
2. acrolein	388	1	ND	ND/ND		
3. acrylonitrile	388	1	ND	ND/ND		
4. benzene	388	1	ND	ND/ND		
5. benzidine	388	6	ND	ND		
6. carbon tetrachloride	388	1	0.003	ND/ND		
7. chlorobenzene	388	1	ND	ND/ND		
8. 1,2,4-trichlorobenzene	388	6	ND	ND		
9. hexachlorobenzene	388	6	ND	ND		
10. 1,2-dichloroethane	388	1	ND	ND/ND		
11. 1,1,1-trichloroethane	388	1	ND	ND/ND		
12. hexachloroethane	388	6	ND	ND		
13. 1,1-dichloroethane	388	1	ND	ND/ND		
14. 1,1,2-trichloroethane	388	1	ND	ND/ND		

TABLE V-10 (Continued)

SECONDARY MOLYBDENUM AND VANADIUM SUBCATEGORY
SEDIMENTATION EFFLUENT
TREATED WASTEWATER SAMPLING DATA

Pollutant	Stream Code	Sample Type†	Concentrations (mg/l) Source	Day 1	Day 2	Day 3
Toxic Pollutants (Continued)						
15. 1,1,2,2-tetrachloroethane	388	1	ND	ND/ND		
16. chloroethane	388	1	ND	ND/ND		
17. bis(chloromethyl)ether	388	1	ND	ND/ND		
18. bis(2-chloroethyl)ether	388	6	ND	ND		
19. 2-chloroethyl vinyl ether	388	1	ND	ND/ND		
20. 2-chloronaphthalene	388	6	ND	ND		
21. 2,4,6-trichlorophenol	388	6	ND	ND		
22. p-chloro-m-cresol	388	6	ND	ND		
23. chloroform	388	1	0.094	ND/ND		
24. 2-chlorophenol	388	6	ND	ND		
25. 1,2-dichlorobenzene	388	6	ND	ND		
26. 1,3-dichlorobenzene	388	6	ND	ND		
27. 1,4-dichlorobenzene	388	6	ND	ND		
28. 3,3'-dichlorobenzidine	388	6	ND	ND		

TABLE V-10 (Continued)
SECONDARY MOLYBDENUM AND VANADIUM SUBCATEGORY
SEDIMENTATION EFFLUENT
TREATED WASTEWATER SAMPLING DATA

Pollutant	Stream Code	Sample Type†	Concentrations (mg/l) Source	Day 1	Day 2	Day 3
Toxic Pollutants (Continued)						
29. 1,1-dichloroethylene	388	1	ND	ND/ND		
30. 1,2-trans-dichloroethylene	388	1	ND	ND/ND		
31. 2,4-dichlorophenol	388	6	ND	ND		
32. 1,2-dichloropropane	388	1	ND	ND/ND		
33. 1,3-dichloropropene	388	1	ND	ND/ND		
34. 2,4-dimethylphenol	388	6	ND	ND		
35. 2,4-dinitrotoluene	388	6	ND	ND		
36. 2,6-dinitrotoluene	388	6	ND	ND		
37. 1,2-diphenylhydrazine	388	6	ND	ND		
38. ethylbenzene	388	1	ND	ND/ND		
39. fluoranthene	388	6	ND	ND		
40. 4-chlorophenyl phenyl ether	388	6	ND	ND		
41. 4-bromophenyl phenyl ether	388	6	ND	ND		
42. bis(2-chloroisopropyl)ether	388	6	ND	ND		

TABLE V-10 (Continued)

SECONDARY MOLYBDENUM AND VANADIUM SUBCATEGORY
SEDIMENTATION EFFLUENT
TREATED WASTEWATER SAMPLING DATA

Pollutant	Stream Code	Sample Type†	Concentrations (mg/l) Source	Day 1	Day 2	Day 3
Toxic Pollutants (Continued)						
43. bis(2-choroethoxy)methane	388	6	ND	ND		
44. methylene chloride	388	1	ND	14.00/ND		
45. methyl chloride (chloromethane)	388	1	ND	ND/ND		
46. methyl bromide (bromomethane)	388	1	ND	ND/ND		
47. bromoform (tribromomethane)	388	1	0.006	ND/ND		
48. dichlorobromomethane	388	1	0.038	ND/ND		
49. trichlorofluoromethane	388	1	ND	ND/ND		
50. dichlorodifluoromethane	388	1	ND	ND/ND		
51. chlorodibromomethane	388	1	0.030	ND/ND		
52. hexachlorobutadiene	388	6	ND	ND		
53. hexachlorocyclopentadiene	388	6	ND	ND		
54. isophorone	388	6	ND	ND		
55. naphthalene	388	6	ND	0.027		
56. nitrobenzene	388	6	ND	ND		

TABLE V-10 (Continued)

SECONDARY MOLYBDENUM AND VANADIUM SUBCATEGORY
SEDIMENTATION EFFLUENT
TREATED WASTEWATER SAMPLING DATA

Pollutant	Stream Code	Sample Type†	Concentrations (mg/l) Source	Day 1	Day 2	Day 3
Toxic Pollutants (Continued)						
57. 2-nitrophenol	388	6	ND	ND		
58. 4-nitrophenol	388	6	ND	ND		
59. 2,4-dinitrophenol	388	6	ND	ND		
60. 4,6-dinitro-o-cresol	388	6	ND	ND		
61. N-nitrosodimethylamine	388	6	ND	ND		
62. N-nitrosodiphenylamine	388	6	ND	ND		
63. N-nitrosodi-n-propylamine	388	6	ND	ND		
64. pentachlorophenol	388	6	ND	ND		
65. phenol	388	6	ND	ND		
66. bis(2-ethylhexyl) phthalate	388	6	ND	ND		
67. butyl benzyl phthalate	388	6	ND	ND		
68. di-n-butyl phthalate	388	6	ND	ND		
69. di-n-octyl phthalate	388	6	ND	ND		
70. diethyl phthalate	388	6	ND	ND		

TABLE V-10 (Continued)

SECONDARY MOLYBDENUM AND VANADIUM SUBCATEGORY
SEDIMENTATION EFFLUENT
TREATED WASTEWATER SAMPLING DATA

Pollutant	Stream Code	Sample Type†	Concentrations (mg/l) Source	Day 1	Day 2	Day 3
Toxic Pollutants (Continued)						
71. dimethyl phthalate	388	6	ND	ND		
72. benzo(a)anthracene	388	6	ND	ND		
73. benzo(a)pyrene	388	6	ND	ND		
74. benzo(b)fluoranthene	388	6	ND	ND		
75. benzo(k)fluoranthane	388	6	ND	ND		
76. chrysene	388	6	ND	ND		
77. acenaphthylene	388	6	ND	ND		
78. anthracene (a)	388	6	ND	ND		
79. benzo(ghi)perylene	388	6	ND	ND		
80. fluorene	388	6	ND	ND		
81. phenanthrene (a)	388	6	ND	ND		
82. dibenzo(a,h)anthracene	388	6	ND	ND		
83. indeno (1,2,3-c,d)pyrene	388	6	ND	ND		
84. pyrene	388	6	ND	ND		

SECONDARY MOLYBDENUM AND VANADIUM SUBCATEGORY
SEDIMENTATION EFFLUENT
TREATED WASTEWATER SAMPLING DATA

Pollutant	Stream Code	Sample Type†	Concentrations (mg/l) Source	Day 1	Day 2	Day 3
Toxic Pollutants (Continued)						
85. tetrachloroethylene	388	1	ND	ND/ND		
86. toluene	388	1	ND	ND/ND		
87. trichloroethylene	388	1	ND	ND/ND		
88. vinyl chloride (chloroethylene)	388	1	ND	ND/ND		
114. antimony	388	6	0.032	0.038	0.084	0.066
115. arsenic	388	6	0.32	0.010	0.0049	0.0060
117. beryllium	388	6	<0.02	<0.02	<0.01	<0.02
118. cadmium	388	6	<0.03	<0.03	<0.03	<0.03
119. chromium (total)	388	6	0.14	<0.10	<0.10	<0.10
120. copper	388	6	<0.05	<0.05	0.31	0.50
121. cyanide (total)	388	1	<0.01	<0.01	0.04	<0.01
122. lead	388	6	0.16	0.058	0.041	0.065
123. mercury	388	6	<0.005	<0.005	0.0063	0.0074
124. nickel	388	6	<0.05	<0.05	0.30	0.25

TABLE V-10 (Continued)

SECONDARY MOLYBDENUM AND VANADIUM SUBCATEGORY
SEDIMENTATION EFFLUENT
TREATED WASTEWATER SAMPLING DATA

Pollutant	Stream Code	Sample Type†	Concentrations (mg/l) Source	Day 1	Day 2	Day 3
Toxic Pollutants (Continued)						
125. selenium	388	6	0.0045	0.042	0.057	0.067
126. silver	388	6	<0.0005	0.001	0.0013	0.0016
127. thallium	388	6	<0.001	0.087	0.085	0.067
128. zinc	388	6	<0.10	<0.10	<0.10	0.20
Nonconventional Pollutants						
Acidity	388	6	20	<1	<10	<10
Alkalinity	388	6	123	1,080	1,330	1,950
Aluminum	388	6	0.29	<0.25	0.97	0.96
Ammonia Nitrogen	388	6	0.07	2,400	1,800	1,600
Barium	388	6	<0.01	<0.01	<0.01	<0.01
Boron	388	6	0.045	0.58	2.40	2.20
Calcium	388	6	54.00	24.00	15.00	11.5
Chemical Oxygen Demand (COD)	388	6	20	10	125	850
Chloride	388	6	310	43,000	>19,000	>19,000

TABLE V-10 (Continued)

SECONDARY MOLYBDENUM AND VANADIUM SUBCATEGORY
SEDIMENTATION EFFLUENT
TREATED WASTEWATER SAMPLING DATA

Pollutant	Stream Code	Sample Type†	Concentrations (mg/l) Source	Day 1	Day 2	Day 3
Nonconventional Pollutants (Continued)						
Cobalt	388	6	0.17	<0.03	2.70	2.10
Fluoride	388	6	0.4	1.0	1.8	1.4
Iron	388	6	0.33	0.34	0.35	0.31
Magnesium	388	6	18.00	130.00	120.00	140.00
Manganese	388	6	0.017	0.22	0.16	22.0
Molybdenum	388	6	0.94	12.00	52.00	57.00
Germanium	388	6	0.74	0.55	0.78	0.76
Phosphate	388	6	0.70	2.0	7.9	9.0
Sodium	388	6	52.00	22,000	10,000	13,000
Sulfate	388	6	16	1,200	2,100	1,700
Tin	388	6	<0.25	<0.25	<0.25	<0.25
Titanium	388	6	<0.25	<0.25	<0.25	<0.25
Total Dissolved Solids (TDS)	388	6	430	62,000	130,000	90,000
Total Organic Carbon (TOC)	388	6	<10	31	77	280

TABLE V-10 (Continued)

SECONDARY MOLYBDENUM AND VANADIUM SUBCATEGORY
SEDIMENTATION EFFLUENT
TREATED WASTEWATER SAMPLING DATA

Pollutant	Stream Code	Sample Type†	Concentrations (mg/l) Source	Day 1	Day 2	Day 3
Nonconventional Pollutants (Continued)						
Total Solids (TS)	388	6	490	66,000	89,000	96,000
Vanadium	388	6	0.46	17.00	20.00	22.00
Yttrium	388	6	<0.13	<0.13	<0.13	<0.13
Conventional Pollutants						
Oil and Grease	388	1	8	23	11	14
Total Suspended Solids (TSS)	388	6	<1	56	280	170
pH (standard units)	388			7.0	8.0	8.0

†Sample Type Code: 1 - One-time grab
6 - 24-hour automatic composite

(a) Reported together.

SECTION VI

SELECTION OF POLLUTANTS

This section examines chemical analysis data presented in Section V and discusses the selection or exclusion of pollutants for potential limitation. The discussion that follows presents and briefly discusses the selection of conventional and nonconventional pollutants for effluent limitations. Also described is the analysis that was performed to select or exclude priority pollutants for further consideration for limitations and standards. Pollutants will be considered for limitation if they are present in concentrations treatable by the technologies considered in this analysis. The treatable concentrations used for the priority metals were the long-term performance values achievable by chemical precipitation, sedimentation, and filtration. The treatable concentrations used for the priority organics were the long-term performance values achievable by carbon adsorption.

CONVENTIONAL AND NONCONVENTIONAL POLLUTANT PARAMETERS

As part of this study, the Agency examined samples for two conventional pollutant parameters (total suspended solids and pH) and several nonconventional pollutant parameters. On March 18, 1985, the Agency published a notice of data availability which stated that the Agency was considering regulating the nonconventional pollutants aluminum, ammonia, boron, cobalt, germanium, iron, manganese, molybdenum, tin, titanium, and vanadium in this subcategory. For promulgation, the Agency has decided to regulate only the nonconventional pollutants ammonia, iron and molybdenum. The remaining pollutants (aluminum, boron, cobalt, germanium, manganese, tin, titanium and vanadium) are not selected for limitation because they will be effectively controlled by the limitations established for the selected priority metal pollutants and the nonconventional metal pollutants iron and molybdenum.

CONVENTIONAL AND NONCONVENTIONAL POLLUTANT PARAMETERS SELECTED

The conventional and nonconventional pollutants or pollutant parameters selected for limitation in this subcategory are:

ammonia
molybdenum
iron
total suspended solids (TSS)
pH

Ammonia was measured in the raw wastewater at concentrations well above the 32.2 mg/l considered achievable with steam stripping

treatment and the 100 mg/l achievable with air stripping treatment. In addition, ammonia is expected to be present in the wastewater based on the raw materials (NH_4Cl) used during processing. For these reasons, ammonia is selected for limitation in this subcategory.

Molybdenum was detected in the raw wastewater in concentrations above the concentration considered achievable by treatment, 1.23 mg/l. Molybdenum was detected in all 8 raw wastewater samples analyzed. For this reason and because it is a principal metal produced in this subcategory, molybdenum is selected for limitations in this subcategory.

Iron was detected in the raw wastewater in concentrations exceeding the concentration considered achievable with treatment, 0.28 mg/l. Iron was detected in all 8 raw wastewater samples analyzed. In addition, iron is expected to be present in the wastewater because of its use as a raw material in the iron co-precipitation wastewater treatment system. For these reasons, iron is selected for limitation in this subcategory.

TSS was measured in all 8 raw wastewater samples above the treatable concentration of 2.6 mg/l. Although the pH of leach tailings was measured at 9, which is within the 7.5 to 10 range considered acceptable, the pH of molybdenum filtrate solvent extraction raffinate was measured outside the acceptable range. Most of the technologies used to remove priority metals do so by carefully controlling pH, and converting the priority metals to precipitates. Priority-metal-containing precipitates should not be discharged. Meeting a limitation on total suspended solids also ensures that sedimentation to remove precipitated priority metals has been effective. For these reasons, both total suspended solids and pH are selected for limitation in this subcategory.

TOXIC PRIORITY POLLUTANTS

The frequency of occurrence of the priority pollutants in the wastewater samples taken was computed but has been claimed confidential by the one facility that was sampled. These data provide the basis for the categorization of specific pollutants, as discussed below. The frequency of occurrence analysis is based on the raw wastewater data from streams 884 and 387 (see Section V). These sampling data are from leach tailings and molybdenum filtrate solvent extraction raffinate raw wastewaters.

TOXIC POLLUTANTS NEVER DETECTED

The toxic pollutants listed in Table VI-1 (page 3544) were not detected in any wastewater samples from this subcategory; therefore, they are not selected for consideration in establishing limitations.

TOXIC POLLUTANTS NEVER FOUND ABOVE THEIR ANALYTICAL QUANTIFICATION LIMIT

The toxic pollutants listed below were never found above their analytical quantification concentration in any wastewater samples from this subcategory; therefore, they are not selected for consideration in establishing limitations.

23. chloroform
126. silver
127. thallium

TOXIC POLLUTANTS PRESENT BELOW CONCENTRATIONS ACHIEVABLE BY TREATMENT

The toxic pollutants listed below are not selected for consideration in establishing limitations because they were not found in any wastewater samples from this subcategory above concentrations considered achievable by existing or available treatment technologies. These pollutants are discussed below.

114. antimony
117. beryllium
118. cadmium
121. cyanide
123. mercury
125. selenium

Antimony was detected above its analytical quantification concentration in 4 of 8 samples. These values are below the concentration considered achievable by identified treatment technology (0.47 mg/l. Therefore, antimony is not considered for limitation.

Beryllium was detected above its analytical quantification concentration in 4 of 8 samples. These values are below the concentration considered achievable by identified treatment technology (0.2 mg/l. Therefore, beryllium is not considered for limitation.

Cadmium was detected above its analytical quantification concentration in 1 of 8 samples. This value is below the concentration considered achievable by identified treatment technology (0.049 mg/l). Therefore, cadmium is not considered for limitation.

Cyanide was detected above its analytical quantification concentration in 2 of 6 samples. These values are below the concentration considered achievable by identified treatment technology (0.047 mg/l). Therefore, cyanide is not considered for limitation.

Mercury was detected above its analytical quantification concentration in 6 of 8 samples. These values are below the

concentration considered achievable by identified treatment technology (0.036 mg/l). Therefore, mercury is not considered for limitation.

Selenium was detected above its analytical quantification concentration in 4 of 8 samples. These values are below the concentration considered achievable by identified treatment technology (0.2 mg/l. Therefore, selenium is not considered for limitation.

TOXIC POLLUTANTS DETECTED IN A SMALL NUMBER OF SOURCES

The following pollutants were not selected for limitation on the basis that they are detectable in the effluent from only a small number of sources within the subcategory and they are uniquely related to only those sources.

44. methylene chloride
45. methyl chloride
55. naphthalene
70. diethyl phthalate

Although these pollutants were not selected for consideration in establishing nationwide limitations, it may be appropriate, on a case-by-case basis, for the local permitter to specify effluent limitations.

Methylene chloride was found above its treatable concentration (0.01 mg/l) in 2 of 3 raw wastewater samples. This compound is not attributable to specific materials or processes associated with the secondary molybdenum and vanadium subcategory; however it is a common solvent used in analytical laboratories. Since the possibility of sample contamination is likely, methylene chloride is not considered for limitation.

Methyl chloride was found above its treatable concentration (0.01 mg/l) in 3 of 3 raw wastewater samples. This compound is not attributable to specific materials or processes associated with this subcategory; however, it is a common solvent used in analytical laboratories. Since the possibility of sample contamination is likely, methyl chloride is not considered for limitation.

Naphthalene was found above its treatable concentration (0.01 mg/l) in 2 of 3 samples analyzed. This compound is not attributable to specific materials or processes used in this subcategory. In addition, very little removal can be expected for naphthalene based on its low concentration in the raw waste. For these reasons, naphthalene is not considered for limitations.

Diethyl phthalate was found above its treatable concentration (0.01 mg/l) in one of 3 samples analyzed. This compound is not attributable to specific materials or processes used in this subcategory, but is commonly used as a plasticizer in laboratory and field sampling equipment. For these reasons, diethyl

phthalate is not considered for limitations.

TOXIC POLLUTANTS SELECTED FOR FURTHER CONSIDERATION IN ESTABLISHING LIMITATIONS AND STANDARDS

The pollutants listed below were selected for further consideration in establishing limitations and standards for this subcategory. These pollutants are discussed individually following the list.

115. arsenic
119. chromium
120. copper
122. lead
124. nickel
128. zinc

Arsenic was detected above its treatable concentration (0.34 mg/l) in 4 of 8 samples. Because arsenic is present in concentrations exceeding the concentration achievable by identified treatment technology, it is selected for consideration for limitation.

Chromium was detected above its treatable concentration (0.07 mg/l) in 4 of 8 samples analyzed. Because chromium is present in concentrations exceeding the concentration achievable by identified treatment technology, it is selected for consideration for limitation.

Copper was detected above its treatable concentration (0.39 mg/l) in 7 of 8 samples analyzed. Because copper is present in concentrations exceeding the concentration achievable by identified treatment technology, it is selected for consideration for limitation.

Lead was detected above its treatable concentrations (0.08 mg/l) in 5 of 8 samples analyzed. Because lead was present in concentrations exceeding the concentration achievable by identified treatment technology, it is selected for consideration for limitation.

Nickel was detected above its treatable concentration (0.22 mg/l) in 5 of 8 samples analyzed. Concentrations ranged from 1.2 to 19 mg/l. Because nickel is present in concentrations exceeding the concentration achievable by identified treatment technology, it is selected for consideration for limitation.

Zinc was detected above its treatable concentration (0.23 mg/l) in 2 of 8 samples analyzed. Because zinc is present in concentrations exceeding the concentration achievable by identified treatment technology, it is selected for consideration for limitation.

TABLE VI-1

TOXIC POLLUTANTS NEVER DETECTED

1. Acenaphthene
2. Acrolein
3. Acrylonitrile
4. Benzene
5. Benzidine
6. Carbon tetrachloride (tetrachloromethane)
7. Chlorobenzene
8. 1,2,4-trichlorobenzene
9. Hexachlorobenzene
10. 1,2-dichloroethane
11. 1,1,1-trichlorethane
12. Hexachloroethane
13. 1,1-dichloroethane
14. 1,1,2-trichloroethane
15. 1,1,2,2-tetrachloroethane
16. Chloroethane
17. Bis (chloromethyl) ether (Deleted)
18. Bis (2-chloroethyl) ether
19. 2-chloroethyl vinyl ether (mixed)
20. 2-chloronaphthalene
21. 2,4,6-trichlorophenol
22. Parachlorometa cresol
24. 2-chlorophenol
25. 1,2-dichlorobenzene
26. 1,3-dichlorobenzene
27. 1,4-dichlorobenzene
28. 3,3-dichlorobenzidine
29. 1,1-dichloroethylene
30. 1,2-trans-dichloroethylene
31. 2,4-dichlorophenol
32. 1,2-dichloropropane
33. 1,2-dichloropropylene (1,3-dichloropropene)
34. 2,4-dimethylphenol
35. 2,4-dinitrotoluene
36. 2,6-dinitrotoluene
37. 1,2-diphenylhydrazine
38. Ethylbenzene
39. Fluoranthene
40. 4-chlorophenyl phenyl ether
41. 4-bromophenyl phenyl ether
42. Bis (2-chloroisopropyl) ether
43. Bis (2-chloroethoxy) methane
46. Methyl bromide (bromomethane)
47. Bromoform (tribromomethane)
48. Dichlorobromomethane
49. Trichlorofluoromethane (Deleted)

TABLE VI-1 (Continued)

TOXIC POLLUTANTS NEVER DETECTED

50. Dichlorodifluoromethane (Deleted)
51. Chlorodibromomethane
52. Hexachlorobutadiene
53. Hexachloromyclopentadiene
54. Isophorone
56. Nitrobenzene
57. Nitrophenol
58. 4-nitrophenol
59. 2,4-dinitrophenol
60. 4,6-dinitro-o-cresol
61. N-nitrosodimethylamine
62. N-nitrosodiphenylamine
63. N-nitrosodi-n-propylamine
64. Pentachlorophenol
65. Phenol
66. Bis (2-ethylhexyl) phthalate
67. Butyl benzyl phthalate
68. Di-n-butyl phthalate
69. Di-n-octyl phthalate
71. Dimethyl phthalate
72. Benzo(a)anthracene
73. Benzo(a)pyrene
74. 3,4-benzofluroanthene
75. Benzo(k)fluoranthene (11, 12-benzofluoranthene)
76. Chrysene
77. Acenaphthylene
78. Anthracene
79. Benzo(ghi)perylene (1, 12-benzoperylene)
80. Fluorene
81. Phenanthrene
82. Dibenzo(a,h)anthracene
83. Indeno (1,2,-cd)pyrene (2,3-o-phenylenepyrene)
84. Pyrene
85. Tetrachloroethylene
86. Toluene
87. Trichloroethylene*
88. Vinyl chloride (chloroethylene)
89. Aldrin*
90. Dieldrin*
91. Chlordane (technical mixture and metabolities)*
92. 4,4'-DDT
93. 4,4'-DDE(p,p'DDX)*
94. 4,4'-DDD(p,p'TDE)*
95. A-endosulfan-Alpha*
96. B-endosulfan-Beta*
97. Endosulfan sulfate*
98. Endrin*
99. Endrin aldehyde*

TABLE VI-1 (Continued)

TOXIC POLLUTANTS NEVER DETECTED

100. Heptachlor*
101. Heptachlor epoxide*
102. Alpha-BHC
103. Beta-BHC
104. Gamma-BHC
105. Delta-BHC
106. PCB-1242 (Arochlor 1242)*
107. PCB-1254 (Arochlor 1254)*
108. PCB-1221 (Arochlor 1221)*
109. PCB-1232 (Arochlor 1232)*
110. PCB-1248 (Arochlor 1248)*
111. PCB-1260 (Arochlor 1260)*
112. PCB-1016 (Arochlor 1016)*
113. Toxaphene*
116. Asbestos (Fibrous)
129. 2,3,7,8-tetra chlorodibenzo-p-dioxin (TCDD)

*We did not analyze for these pollutants in samples of raw wastewater from this subcategory. These pollutants are not believed to be present based on the Agency's best engineering judgement which included consideration of raw materials and process operations.

SECTION VII

CONTROL AND TREATMENT TECHNOLOGIES

The preceding sections of this supplement discussed the sources, flows, and characteristics of the wastewaters from secondary molybdenum and vanadium plants. This section summarizes the description of these wastewaters and indicates the treatment technologies which are currently practiced in the secondary molybdenum and vanadium subcategory for each waste stream. Secondly, this section presents the control and treatment technology options which were examined by the Agency for possible application to the secondary molybdenum and vanadium subcategory.

CURRENT CONTROL AND TREATMENT PRACTICES

This section presents a summary of the control and treatment technologies that are currently being applied to each of the sources generating wastewater in this subcategory. As discussed in Section V, wastewater associated with the secondary molybdenum and vanadium subcategory is characterized by the presence of ammonia, iron, molybdenum, toxic metal pollutants and suspended solids. This analysis is supported by the wastewater data presented for 2 raw waste streams in Section V. Generally, these pollutants are present in each of the waste streams at concentrations above treatability, and these waste streams are commonly combined for treatment. Combined treatment allows plants to take advantage of economic scale and in some instances to combine streams of different alkalinity to reduce treatment chemical requirements. The one plant in this subcategory currently has a combined wastewater treatment system, consisting of ammonia air stripping, caustic precipitation and sedimentation. The two options selected for consideration for BPT, BAT, NSPS, and pretreatment based on combined treatment of these compatible waste streams will be summarized toward the end of this section.

LEACH TAILINGS

The calcined product from the roasting furnace is quenched, ground and leached with water in order to remove inerts and other impurities and solubilize molybdenum and vanadium. The pregnant liquor from leaching is a solution containing the molybdenum and vanadium values. Leaching also produces tailings which may be discharged as a waste stream after solvent extraction. The one plant in this subcategory generates a leach tailings wastewater stream, and treats it along with the molybdenum filtrate solvent extraction raffinate wastewater stream with chemical precipitation and sedimentation. The wastewater is directly discharged after treatment.

MOLYBDENUM FILTRATE SOLVENT EXTRACTION RAFFINATE

Treatment of molybdenum filtrate solvent extraction raffinate consists of chemical precipitation and sedimentation, along with preliminary treatment consisting of ammonia air stripping. The wastewater is directly discharged after treatment.

VANADIUM DECOMPOSITION WET AIR POLLUTION CONTROL

Emissions from a vanadium decomposition furnace are controlled with a wet scrubber. The scrubber liquor is reused in the process so there is no discharge from the air pollution control operation.

MOLYBDENUM DRYING WET AIR POLLUTION CONTROL

Molybdic acid produced in the molybdenum recovery operation is converted to molybdenum trioxide in a calcining furnace. The one plant in this subcategory uses a wet scrubber to control emissions from the molybdenum drying furnace, but reuses all of the scrubber liquor in the molybdic acid process. No wastewater is discharged from the scrubber.

PURE GRADE MOLYBDENUM

As discussed in Section V, EPA established a new building block for pure grade molybdenum wastewater. Pure grade molybdenum is produced from molybdic acid. Wastewater from this process is discharged after treatment.

CONTROL AND TREATMENT OPTIONS

The Agency examined two control and treatment technology options that are applicable to the secondary molybdenum and vanadium subcategory. The options selected for evaluation represent a combination of preliminary treatment technologies applicable to individual waste streams, and end-of-pipe treatment technologies. The effectiveness of these treatment technologies are discussed in Section VII of Vol. I.

OPTION A

Option A for the secondary molybdenum and vanadium subcategory requires control and treatment technologies to reduce the discharge of wastewater pollutant mass.

The Option A treatment scheme consists of chemical precipitation and sedimentation technology. Specifically, lime or some other alkaline compound is used to precipitate priority metal ions as metal hydroxides. The metal hydroxides and suspended solids settle out and the sludge is collected. Vacuum filtration is used to dewater sludge.

Preliminary treatment consisting of ammonia air stripping for waste streams containing treatable concentrations of ammonia is

also included in Option A. Air stripping is an effective method for reducing ammonia concentrations.

Also included is treatment consisting of iron (ferric chloride or ferrous sulfate) co-precipitation to reduce molybdenum concentrations. Iron co-precipitation is an effective treatment step for molybdenum removal.

OPTION C

Option C for the secondary molybdenum and vanadium subcategory consists of all control and treatment requirements of Option A (ammonia air stripping, iron co-precipitation, chemical precipitation and sedimentation) plus multimedia filtration technology added at the end of the Option A treatment scheme. Multimedia filtration is used to remove suspended solids, including precipitates of metals, beyond the concentration attainable by gravity sedimentation. The filter suggested is of the gravity, mixed-media type, although other forms of filters, such as rapid sand filters or pressure filters would perform satisfactorily. The addition of filters also provides consistent removal during periods of time in which there are rapid increases in flows or loadings of pollutants to the treatment system.

THIS PAGE INTENTIONALLY LEFT BLANK

SECTION VIII

COSTS, ENERGY, AND NONWATER QUALITY ASPECTS

This section presents a summary of compliance costs for the secondary molybdenum and vanadium subcategory and a description of the treatment options and subcategory-specific assumptions used to develop these estimates. Together with the estimated pollutant removal performance presented in Section X of this supplement, these cost estimates provide a basis for evaluating each regulatory option. These cost estimates are also used in determining the probable economic impact of regulation on the subcategory at different pollutant discharge levels. In addition, this section addresses nonwater quality environmental impacts of wastewater treatment and control alternatives, including air pollution, solid wastes, and energy requirements, which are specific to the secondary molybdenum and vanadium subcategory.

TREATMENT OPTIONS FOR EXISTING SOURCES

As discussed in Section VII, two treatment options have been developed for existing secondary molybdenum and vanadium sources. The treatment schemes for each option are summarized below and schematically presented in Figures X-1 and X-2 (pages 3585 and 3586).

OPTION A

The Option A treatment scheme includes preliminary treatment consisting of ammonia air stripping for waste streams containing treatable concentrations of ammonia, iron co-precipitation, and chemical precipitation and sedimentation end-of-pipe treatment technology.

OPTION C

Option C consists of Option A (ammonia air stripping, iron co-precipitation, and chemical precipitation and sedimentation) plus multimedia filtration technology added at the end of the Option A treatment scheme.

COST METHODOLOGY

A detailed discussion of the methodology used to develop the compliance costs is presented in Section VIII of the General Development Document. Plant-by-plant compliance costs for the nonferrous metals manufacturing category have been revised as necessary following proposal. These revisions calculate incremental costs, above treatment already in place, necessary to comply with the promulgated effluent limitations and standards and are presented in the administrative record supporting this

regulation. The costs developed for the final regulation are presented in Table VIII-1 (page 3556) for the one direct discharger in this subcategory.

Each of the general assumptions used to develop compliance costs is presented in Section VIII of the General Development Document. Each subcategory contains a unique set of waste streams requiring certain subcategory-specific assumptions to develop compliance costs. Three major assumptions relevant to the secondary molybdenum and vanadium subcategory are discussed briefly below.

(1) Only the molybdenum filtrate solvent extraction raffinate will be treated for ammonia removal.

(2) The plant has a chemical precipitation and gravity settling system currently in-place.

(3) For costing purposes, ammonia air stripping performance data is transferred to this subcategory from a plant in the primary beryllium subcategory.

NONWATER QUALITY ASPECTS

Nonwater quality impacts specific to the secondary molybdenum and vanadium subcategory, including energy requirements, solid waste and air pollution are discussed below.

ENERGY REQUIREMENTS

The methodology used for determining the energy requirements for the various options is discussed in Section VIII of the General Development Document. Energy requirements for Option A are estimated at 1,000,000 kwh/yr, and for Option C the estimated requirement is 1,023,000 kwh/yr. Both options require large amounts of energy because ammonia air stripping is an energy intensive technology. Option C energy requirements increase over those for Option A because filtration is being added as an end-of-pipe treatment technology. Both Option A and Option C energy requirements represent approximately ten percent of the energy usage in the secondary molybdenum and vanadium industry. Although this is a large percentage increase, the added costs will be partially offset by the additional ammonia values recovered by the facility.

SOLID WASTE

Sludge generated in the secondary molybdenum and vanadium subcategory is due to the precipitation of metal hydroxides and carbonates using lime or other chemicals. Sludges associated with the secondary molybdenum and vanadium subcategory will necessarily contain quantities of priority metal pollutants. Wastes generated by secondary metal industries can be regulated as hazardous. However, the Agency examined the solid wastes that would be generated at secondary nonferrous metals manufacturing plants by the suggested treatment

technologies and believes they are not hazardous wastes under the Agency's regulations implementing Section 3001 of the Resource Conservation and Recovery Act. The one exception to this is solid wastes generated by cyanide precipitation. These sludges are expected to be hazardous and this judgment was included in this study. None of the non cyanide wastes are listed specifically as hazardous. Nor are they likely to exhibit a characteristic of hazardous waste. This judgment is made based on the recommended technology of chemical precipitation sedimentation, and filtration. By the addition of a small excess of lime during treatment, similar sludges, specifically priority metal bearing sludges, generated by other industries such as the iron and steel industry passed the Extraction Procedure (EP) toxicity test. See 40 CFR 261.24. Thus, the Agency believes that the wastewater sludges will similarly not be EP toxic if the recommended technology is applied.

Although it is the Agency's view that solid wastes generated as a result of these guidelines are not expected to be hazardous, generators of these wastes must test the waste to determine if the wastes meet any of the characteristics of hazardous waste (see 40 CFR 262.11).

If these wastes should be identified or are listed as hazardous, they will come within the scope of RCRA's "cradle to grave" hazardous waste management program, requiring regulation from the point of generation to point of final disposition. EPA's generator standards would require generators of hazardous nonferrous metals manufacturing wastes to meet containerization, labeling, recordkeeping, and reporting requirements; if plants dispose of hazardous wastes off-site, they would have to prepare a manifest which would track the movement of the wastes from the generator's premises to a permitted off-site treatment, storage, or disposal facility. See 40 CFR 262.20 45 FR 33142 (May 19, 1980), as amended at 45 FR 86973 (December 31, 1980). The transporter regulations require transporters of hazardous wastes to comply with the manifest system to assure that the wastes are delivered to a permitted facility. See 40 CFR 263.20 45 FR 33151 (May 19, 1980), as amended at 45 FR 86973 (December 31, 1980). Finally, RCRA regulations establish standards for hazardous waste treatment, storage, and disposal facilities allowed to receive such wastes. See 40 CFR Part 464. 46 FR 2802 (January 12, 1981), 47 FR 32274 (July 26, 1982).

Even if these wastes are not identified as hazardous, they still must be disposed of in compliance with the Subtitle D open dumping standards, implementing 4004 of RCRA. See 44 FR 53438 (September 13, 1979). EPA estimates that 850 metric tons of sludge will be generated annually as a result of the wastewater treatment operations on this subcategory.

AIR POLLUTION

There is no reason to believe that any substantial air pollution problems will result from implementation of ammonia air stripping, iron co-precipitation, chemical precipitation, sedimentation, and multimedia filtration. Ammonia air stripping as presently practiced at the one plant in this subcategory yields an aqueous ammonium salt by-product stream. The other technologies transfer pollutants to solid waste and are not likely to transfer pollutants to air.

Table VIII-1

The cost of compliance data are not presented here because the data on which they are based have been claimed to be confidential.

THIS PAGE INTENTIONALLY LEFT BLANK

SECTION IX

BEST PRACTICABLE CONTROL TECHNOLOGY CURRENTLY AVAILABLE

This section defines the effluent characteristics attainable through the application of best practicable control technology currently available (BPT). BPT reflects the existing performance by plants of various sizes, ages, and manufacturing processes within the secondary molybdenum and vanadium subcategory, as well as the established performance of the recommended BPT systems. Particular consideration is given to the treatment already in place at plants within the data base.

The factors considered in identifying BPT include the total cost of applying the technology in relation to the effluent reduction benefits from such application, the age of equipment and facilities involved, the manufacturing processes used, nonwater quality environmental impacts (including energy requirements), and other factors the Administrator considers appropriate. In general, the BPT level represents the average of the existing performances of plants of various ages, sizes, processes, or other common characteristics. Where existing performance is uniformly inadequate, BPT may be transferred from a different subcategory or category. Limitations based on transfer of technology are supported by a rationale concluding that the technology is, indeed, transferable, and a reasonable prediction that it will be, capable of achieving the prescribed effluent limits. BPT focuses on end-of-pipe treatment rather than process changes or internal controls, except where such practices are common industry practice.

TECHNICAL APPROACH TO BPT

The Agency studied the nonferrous metals category to identify the processes used, the wastewaters generated, and the treatment processes installed. Information was collected from industry using data collection portfolios, and specific plants were sampled and the wastewaters analyzed. In making technical assessments of data, reviewing manufacturing processes, and assessing wastewater treatment technology options, both indirect and direct dischargers have been considered as a single group. An examination of plants and processes did not indicate any process differences based on the type of discharge, whether it be direct or indirect.

As explained in Section IV, the secondary molybdenum and vanadium subcategory has been subdivided into five potential wastewater sources. Since the water use, discharge rates, and pollutant characteristics of each of these wastewaters is potentially unique, effluent limitations will be developed for each of the

five building blocks.

For each building block, a specific approach was followed for the development of BPT mass limitations. The first requirement to calculate these limitations is to account for production and flow variability from plant to plant. Therefore, a unit of production or production normalizing parameter (PNP) was determined for each waste stream which could then be related to the flow from the process to determine a production normalized flow. Selection of the PNP for each process element is discussed in Section IV. Each plant within the subcategory was then analyzed to determine which building blocks were present, the specific flow rates generated for each subdivision, and the specific production normalized flows for each subdivision. This analysis is discussed in detail in Section V. Nonprocess wastewaters such as rainfall runoff and noncontact water are not considered in the analysis. Production normalized flows for each subdivision were then analyzed to determine the flow to be used as part of the basis for BPT mass limitations. The selected flow (sometimes referred to as the BPT regulatory flow or BPT discharge rate) reflects the water use controls which are common practices within the category. The BPT regulatory flow is based on the average of all applicable data. Plants with normalized flows above the average may have to implement some method of flow reduction to achieve the BPT limitations.

The second requirement to calculate mass limitations is the set of concentrations that are achievable by application of the BPT level of treatment technology. Section VII discusses the various control and treatment technologies which are currently in place for each wastewater source. In most cases, the current control and treatment technologies consist of chemical precipitation and sedimentation (lime and settle technology) and a combination of reuse and recycle to reduce flow. Ammonia air stripping is applied to streams with treatable concentrations of ammonia. Iron co-precipitation. is applied to streams with treatable concentrations of molybdenum.

Using these regulatory flows and the achievable concentrations, the next step is to calculate mass loadings for each wastewater source or subdivision. This calculation was made on a stream-by-stream basis, primarily because plants in this subcategory may perform one or more of the operations in various combinations. The mass loadings (milligrams of pollutant per metric ton of production (mg/kkg) were calculated by multiplying the BPT regulatory flow (l/kkg) by the concentration achievable by the BPT level of treatment technology (mg/l) for each pollutant parameter to be limited under BPT. These mass loadings are published in the Federal Register and in 40 CFR Part 421 as the BPT effluent limitations.

The mass discharge loadings which are allowed under BPT for each plant will be the sum of the individual mass loadings for the various wastewater sources which are found at particular plants. Accordingly, all the wastewater generated

within a plant may be combined for treatment in a single or common treatment system, but the effluent limitations for these combined wastewaters are based on the various wastewater sources which actually contribute to the combined flow. This method accounts for the variety of combinations of wastewater sources and production processes which may be found at secondary molybdenum and vanadium plants.

The Agency usually establishes wastewater limitations in terms of mass rather than concentration. This approach prevents the use of dilution as a treatment method (except for controlling pH). The production normalized wastewater flow (l/kkg) is a link between the production operations and the effluent limitations.

The pollutant discharge attributable to each operation can be calculated from the regulatory (normalized) flow and effluent concentration achievable by the treatment technology. These discharges may be summed to derive an appropriate limitation for each plant.

INDUSTRY COST AND POLLUTANT REMOVAL ESTIMATES

In balancing costs in relation to pollutant removal estimates, EPA considers the volume and nature of existing discharges, the volume and nature of discharges expected after application of BPT, the general environmental effects of the pollutants, and the cost and economic impacts of the required pollution control level. The Act does not require or permit consideration of water quality problems attributable to particular point sources or industries, or water quality improvements in particular water quality bodies. Accordingly, water quality considerations were not the basis for selecting the proposed or promulgated BPT.

The methodology for calculating pollutant removal estimates and plant compliance costs is discussed in Section X. The pollutant removal estimates have been revised based on new data obtained since proposal. The pollutant discharge and removal estimates for the secondary molybdenum and vanadium subcategory are shown in Table X-1 (page 3577). Compliance costs for the direct discharger are presented in Table X-2 (page 3578).

BPT OPTION SELECTION

The technology basis for the BPT limitations is Option A, chemical precipitation and sedimentation technology to remove metals and solids from combined wastewaters and to control pH, ammonia air stripping preliminary treatment to remove ammonia, and iron co-precipitation to reduce molybdenum concentrations. The Agency believes that these technologies are economically achievable.

The promulgated technology is based on air stripping instead of steam stripping for ammonia as had been proposed because the economic impact analysis showed that the costs of steam stripping may cause the only facility in the subcategory to close.

Therefore, the Agency concluded that steam stripping technology is not practicable for this subcategory and decided to rely on air stripping which is already in place. The Agency is also adding iron coprecipitation to the BPT model treatment technology for this subcategory for molybdenum removal. Ammonia air stripping and chemical precipitation and sedimentation technology is in-place at the discharger in this subcategory. The BPT treatment scheme is presented in Figure IX-1 (page 3563).

Ammonia air stripping is currently practiced in the subcategory, and by other plants in the nonferrous metals manufacturing category. Air stripping is an effective method for reducing ammonia concentrations. The secondary molybdenum facility recovers ammonia values in a by-product ammonium chloride recovery system, thus preventing ammonia discharge to the atmosphere.

Iron co-precipitation is not currently practiced in this subcategory, however, it is transferred to this subcategory because existing treatment for molybdenum removal is inadequate. Iron co-precipitation is an effective method for reducing molybdenum concentrations in wastewater.

Implementation of the control and treatment technologies of Option A would remove annually an estimated 319 kilograms of toxic metals and 28,000 kilograms of TSS over estimated current discharge.

WASTEWATER DISCHARGE RATES

A BPT discharge rate is calculated for each subdivision based on the average of the flows of the existing plants, as determined from analysis of dcp. The discharge rate is used with the achievable treatment concentrations to determine BPT effluent limitations. Since the discharge rate may be different for each wastewater sources, separate production normalized discharge rates for each of the five wastewater sources are discussed below and summarized in Table IX-1 (page 3563). The discharge rates are normalized on a production basis by relating the amount of wastewater generated to the mass of the intermediate product which is produced by the process associated with the waste stream in question. These production normalizing parameters, or PNPs, are also listed in Table IX-1.

Section V of this document further describes the discharge flow rates and presents the water use and discharge flow rates by subdivision in Tables V-1 through V-5 (pages 3526 - 3527).

LEACH TAILINGS

The BPT wastewater regulatory flow rate at proposal and at promulgation for leach tailings was 12,540 l/kkg (3,012 gal/ton) of molybdenum and vanadium produced. EPA has agreed to revise the leach tailing regulatory flow from 12,540 to 19,511

l/kkg of technical grade molybdenum plus vanadium plus pure grade molybdenum produced. This change reflects a recalculation of the average flows for this building block and the incorporation of new data. This rate is allocated only for those plants which leach calcined spent catalysts, in order to extract molybdenum and vanadium. Water use and wastewater discharge rates are presented in Table V-1 (page 3526).

MOLYBDENUM FILTRATE SOLVENT EXTRACTION RAFFINATE

The BPT wastewater discharge rate promulgated for molybdenum filtrate solvent extraction raffinate was 60,548 l/kkg (14,544 gal/ton) of molybdenum and vanadium produced. EPA has agreed to revise the molybdenum filtrate solvent extraction raffinate regulatory flow from 60,548 to 58,239 l/kkg of technical grade molybdenum plus vanadium plus pure grade molybdenum produced. This change reflects the establishment of a new building block for pure grade molybdenum. The BPT rate is allocated to only those plants recovering molybdenum and vanadium from spent catalysts by a dissolution and precipitation process.

Water use and discharge rates are shown in Table V-2 (page 3526). These rates are based on data gathered during a post-proposal sampling visit.

VANADIUM DECOMPOSITION WET AIR POLLUTION CONTROL

The BPT wastewater discharge rate at proposal and at promulgation for vanadium decomposition wet air pollution control is 0.l/kkg of vanadium produced by decomposition. This rate is based on the 100 percent reuse practiced within this operation. The water use and discharge rates are presented in Table V-3 (page 3526).

MOLYBDENUM DRYING WET AIR POLLUTION CONTROL

The BPT wastewater discharge rate proposed and promulgated for molybdenum drying wet air pollution control is 0 l/kkg of molybdenum produced. This rate is based on the 100 percent reuse practiced by the only plant with this operation. The water use and discharge rates are presented in Table V-4 (page 3527).

PURE GRADE MOLYBDENUM

EPA has established a pure grade molybdenum building block for this subcategory. As discussed in Section V, this building block was not included in the promulgated rule because the wastewater from this operation was included as part of the flow from the molybdenum filtrate solvent extraction raffinate building block. Information made available after promulgation indicated that the pure grade molybdenum and the solvent extraction operations are not as closely linked as the Agency had believed. This building block would apply to the production of pure grade molybdenum from commercial grade molybdenum and is based on a production normalized flow of 23,280 l/kkg of pure molybdenum produced.

REGULATED POLLUTANT PARAMETERS

The raw wastewater concentrations from individual operations and the subcategory as a whole were examined to select certain pollutant parameters for limitation. This examination and evaluation is presented in Sections VI and X. A total of nine pollutants or pollutant parameters were selected for limitation under BPT and are listed below:

115. arsenic
119. chromium
122. lead
124. nickel
ammonia
molybdenum
iron
TSS
pH

EFFLUENT LIMITATIONS

The concentrations achievable by application of the BPT technology are discussed in Section VII of Vol. I and summarized there in Table VII-21 (page 248) with the exception of the ammonia and molybdenum treatment effectiveness concentrations. The treatment effectiveness for ammonia air stripping is not shown in Table VII-21 and the molybdenum treatment effectiveness values are being reserved pending the development of new treatment effectiveness data specifically applicable to this subcategory. These treatment effectiveness values (both one-day maximum and monthly average values) are multiplied by the BPT normalized discharge flows summarized in Table IX-1 (page 3563) to calculate the mass of pollutants allowed to be discharged per mass of product. The results of these calculations in milligrams of pollutant per kilogram of product represents the BPT effluent limitations and are presented in Table IX-2 (page 3564) for each individual building block.

TABLE IX-1

BPT REGULATORY FLOW ALLOWANCES FOR THE SECONDARY MOLYBDENUM AND VANADIUM SUBCATEGORY

Building Block	BAT Regulatory Flow Allowance (l/kkg)	(gal/ton)	PNP
1. Leach tailings	19511	4687	kkg of technical grade molybdenum plus vanadium plus pure grade molybdenum produced
2. Molybdenum filtrate solvent extraction raffinate	58239	13989	kkg of technical grade molybdenum plus vanadium plus pure grade molybdenum produced
3. Vanadium decomposition wet air pollution control	0	0	kkg of vanadium produced by decomposition
4. Molybdenum drying wet air pollution control	0	0	kkg of molybdenum produced
5. Pure grade molybdenum	23280	5592	kkg of pure molybdenum produced

TABLE IX-2

BPT MASS LIMITATIONS FOR THE
SECONDARY MOLYBDENUM AND VANADIUM SUBCATEGORY

(a) Leach Tailings BPT

Pollutant or pollutant property	Maximum for any one day	Maximum for monthly average
mg/kg (lb/million lbs) of technical grade molybdenum plus vanadium plus pure grade molybdenum produced		
*Arsenic	40.778	18.145
*Chromium	8.585	3.512
Copper	37.077	19.511
*Lead	8.195	3.902
*Nickel	37.460	24.779
Zinc	28.489	11.902
Aluminum	125.452	62.438
*Ammonia	8078.000	3551.000
Boron	35.895	16.384
Cobalt	4.097	1.757
Germanium	8.585	3.512
*Iron	23.410	11.902
Manganese	13.267	5.659
*Molybdenum	Reserved	Reserved
Tin	7.414	4.293
Titanium	18.344	7.999
Vanadium	1.951	---
*TSS	799.950	380.460
*pH	Within the range of 7.5 to 10.0 at all times	

*Regulated Pollutant

TABLE IX-2 (Continued)

BPT MASS LIMITATIONS FOR THE
SECONDARY MOLYBDENUM AND VANADIUM SUBCATEGORY

(b) Molybdenum Filtrate Solvent Extraction Raffinate BPT

Pollutant or pollutant property	Maximum for any one day	Maximum for monthly average
mg/kg (lb/million lbs) of technical grade molybdenum plus vanadium plus pure grade molybdenum produced		
*Arsenic	121.720	54.162
*Chromium	25.625	10.483
Copper	110.610	58.241
*Lead	24.460	11.648
*Nickel	111.820	73.964
Zinc	85.029	35.522
Aluminum	374.454	186.410
*Ammonia	24114.000	10600.000
Boron	107.152	48.920
Cobalt	12.235	5.241
Germanium	25.624	10.484
*Iron	69.887	35.526
Manganese	39.600	16.890
*Molybdenum	Reserved	Reserved
Tin	22.133	12.817
Titanium	54.749	23.873
Vanadium	5.824	---
*TSS	2387.800	1135.660
*pH	Within the range of 7.5 to 10.0 at all times	

*Regulated Pollutant

TABLE IX-2 (Continued)

BPT MASS LIMITATIONS FOR THE
SECONDARY MOLYBDENUM AND VANADIUM SUBCATEGORY

(c) Vanadium Decomposition Wet Air Pollution Control BPT

Pollutant or pollutant property	Maximum for any one day	Maximum for monthly average
mg/kg (lb/million lbs) of vanadium produced by decomposition		
*Arsenic	0.000	0.000
*Chromium	0.000	0.000
Copper	0.000	0.000
*Lead	0.000	0.000
*Nickel	0.000	0.000
Zinc	0.000	0.000
Aluminum	0.000	0.000
*Ammonia	0.000	0.000
Boron	0.000	0.000
Cobalt	0.000	0.000
Germanium	0.000	0.000
*Iron	0.000	0.000
Manganese	0.000	0.000
*Molybdenum	0.000	0.000
Tin	0.000	0.000
Titanium	0.000	0.000
Vanadium	0.000	---
*TSS	0.000	0.000
*pH	Within the range of 7.5 to 10.0 at all times	

*Regulated Pollutant

TABLE IX-2 (Continued)

BPT MASS LIMITATIONS FOR THE
SECONDARY MOLYBDENUM AND VANADIUM SUBCATEGORY

(d) Molybdenum Drying Wet Air Pollution Control BPT

Pollutant or pollutant property	Maximum for any one day	Maximum for monthly average
mg/kg (lb/million lbs) of molybdenum produced		
*Arsenic	0.000	0.000
*Chromium	0.000	0.000
Copper	0.000	0.000
*Lead	0.000	0.000
*Nickel	0.000	0.000
Zinc	0.000	0.000
Aluminum	0.000	0.000
*Ammonia	0.000	0.000
Boron	0.000	0.000
Cobalt	0.000	0.000
Germanium	0.000	0.000
*Iron	0.000	0.000
Manganese	0.000	0.000
*Molybdenum	0.000	0.000
Tin	0.000	0.000
Titanium	0.000	0.000
Vanadium	0.000	---
*TSS	0.000	0.000
*pH Within the range of 7.5 to 10.0 at all times		

*Regulated Pollutant

TABLE IX-2 (Continued)

BPT MASS LIMITATIONS FOR THE
SECONDARY MOLYBDENUM AND VANADIUM SUBCATEGORY

(e) Pure Grade Molybdenum BPT

Pollutant or pollutant property	Maximum for any one day	Maximum for monthly average
mg/kg (pounds per million pounds) of pure molybdenum produced		
*Arsenic	48.655	21.650
*Chromium	10.243	4.190
Copper	44.232	23.280
*Lead	9.778	4.656
*Nickel	44.698	29.566
Zinc	33.990	14.200
Aluminum	149.700	74.500
*Ammonia (as N)	9638.000	4239.000
Boron	42.840	19.500
Cobalt	4.889	2.095
Germanium	10.240	4.190
*Iron	27.936	14.201
Manganese	15.830	6.751
*Molybdenum	Reserved	Reserved
Tin	8.846	5.122
Titanium	21.880	9.545
Vanadium	2.329	---
*TSS	954.480	453.960
*pH	Within the range of 7.5 to 10.0 at all times	

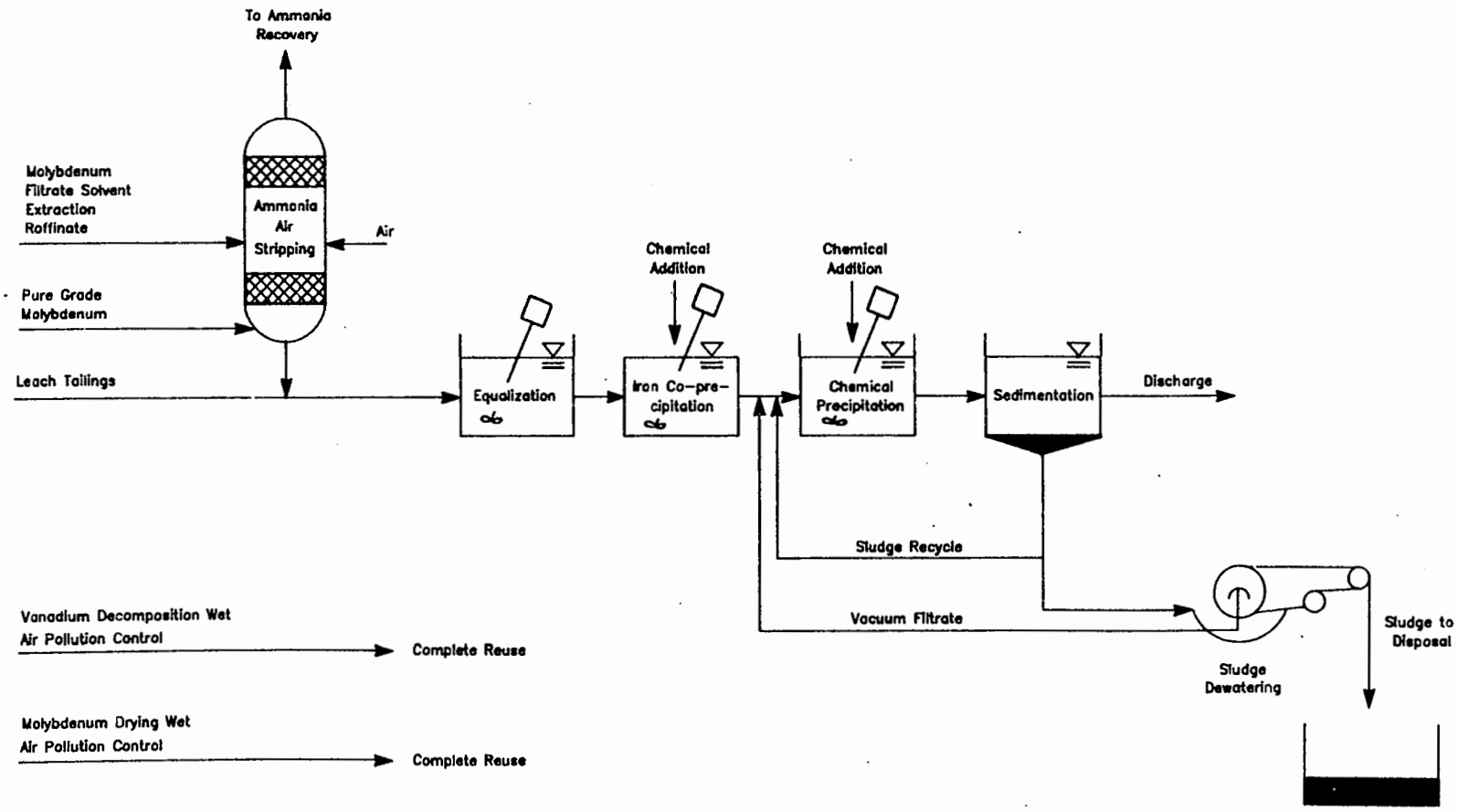

FIGURE IX-1. BPT TREATMENT SCHEME FOR SECONDARY MOLYBDENUM AND VANADIUM SUBCATEGORY

THIS PAGE INTENTIONALLY LEFT BLANK

SECTION X

BEST AVAILABLE TECHNOLOGY ECONOMICALLY ACHIEVABLE

These effluent limitations are based on the best control and treatment technology used by a specific point source within the industrial category or subcategory, or by another category from which it is transferable. Emphasis is placed on additional treatment techniques applied at the end of the treatment systems currently used, as well as reduction of the amount of water used and discharged, process control, and treatment technology optimization.

The factors considered in assessing best available technology economically achievable (BAT) include the age of equipment and facilities involved, the process used, process changes, nonwater quality environmental impacts (including energy requirements), and the costs of application of such technology. BAT represents the best available technology economically achievable at plants of various ages, sizes, processes, or other characteristics. BAT may be transferred from a different subcategory or category and BAT may include feasible process changes or internal controls, even when not in common industry practice.

The statutory assessment of BAT considers costs, but does not require a balancing of costs against pollutant removals. However, in assessing the proposed and promulgated BAT, the Agency has given substantial weight to the economic achievability of the technology.

TECHNICAL APPROACH TO BAT

The Agency reviewed a wide range of technology options and evaluated the available possibilities to ensure that the most effective and beneficial technologies were used as the basis of BAT. To accomplish this, the Agency elected to examine two technology options which could be applied to the secondary molybdenum and vanadium subcategory as alternatives for the basis of BAT effluent limitations.

For the development of BAT effluent limitations, mass loadings were calculated for each wastewater source or subdivision in the subcategory using the same technical approach as described in Section IX for BPT limitations development. The differences in the mass loadings for BPT and BAT are due to increased treatment effectiveness achievable with the more sophisticated BAT treatment technology.

The treatment technologies considered for BAT are summarized below:

Option A (Figure X-1 page 3585) is based on:

- o Preliminary treatment with ammonia air stripping (where required)
- o Iron coprecipitation
- o Chemical precipitation and sedimentation

Option C (Figure X-2 page 3586) is based on:

- o Preliminary treatment with ammonia air stripping (where required)
- o Iron coprecipitation
- o Chemical precipitation and sedimentation
- o Multimedia filtration

The two options examined for BAT are discussed in great detail on the following pages. The first option considered (Option A) is the same as the BPT treatment and control technology which was presented in the previous section. The second option represents substantial progress toward the reduction of pollutant discharges above and beyond the progress achievable by BPT.

OPTION A

Option A for the secondary molybdenum and vanadium subcategory is equivalent to the control and treatment technologies which were analyzed for BPT in Section IX (see Figure X-1). The BPT end-of-pipe treatment scheme includes chemical precipitation and sedimentation, with ammonia air stripping preliminary treatment of wastewaters containing treatable concentrations of ammonia and iron co-precipitation to control molybdenum (see Figure IX-1, page 3563). The discharge rates for Option A are equal to the discharge rates allocated to each stream as a BPT discharge flow.

OPTION C

Option C for the secondary molybdenum and vanadium subcategory consists of all control and treatment requirements of Option A (ammonia air stripping, iron co-precipitation, chemical precipitation and sedimentation) plus multimedia filtration technology added at the end of the Option A treatment scheme (see Figure X-2, page 3586). Multimedia filtration is used to remove suspended solids, including precipitates of metals, beyond the concentrations attainable by gravity sedimentation. The filter suggested is of the gravity, mixed media type, although other forms of filters, such as rapid sand filters or pressure filters, would perform satisfactorily.

INDUSTRY COST AND POLLUTANT REMOVAL ESTIMATES

As one means of evaluating each technology option, EPA developed estimates of the pollutant removals and the compliance costs associated with each option. The methodologies are described below.

POLLUTANT REMOVAL ESTIMATES

A complete description of the methodology used to calculate the estimated pollutant reduction, or benefit, achieved by the application of the various treatment options is presented in Section X of Vol. I. The pollutant removal estimates have been revised since proposal based on new data; however, the methodology for calculating pollutant removals was not changed.

Next, the volume of wastewater discharged after the application of each treatment option was estimated for each operation at each plant by first comparing the actual discharge to the regulatory flow. The smaller of the two values was selected and summed with the other plant flows. The mass of pollutant discharged was then estimated by multiplying the achievable concentration values attainable with the option (mg/l) by the estimated volume of process wastewater discharged by the subcategory. Finally, the mass of pollutant removed is the difference between the estimated mass of pollutant generated by each plant in the subcategory and the mass of pollutant discharged after application of the treatment option. The pollutant removal estimates for the direct discharger in the secondary molybdenum and vanadium subcategory are presented in Table X-1 (page 3563).

COMPLIANCE COSTS

In estimating subcategory-wide compliance costs, the first step was to develop a cost estimation model, relating the total costs associated with installation and operation of wastewater treatment technologies to plant process wastewater discharge. EPA applied the model to each plant. The plant's investment and operating costs are determined by what treatment it has in place and by its individual process wastewater discharge flow. As discussed above, this flow is either the actual or the BAT regulatory flow, whichever is lesser. The final step was to annualize the capital costs, and to sum the annualized capital costs, and the operating and maintenance costs for each plant, yielding the cost of compliance for the subcategory. The costs developed for promulgation are presented in Table X-2 (page 3578) for the direct discharger in the secondary molybdenum and vanadium subcategory. These costs were used in assessing economic achievability.

BAT OPTION SELECTION-PROPOSAL

EPA selected Option C for the proposed BAT which includes chemical precipitation, sedimentation, and multimedia filtration, with ammonia steam stripping preliminary treatment of wastewaters

containing treatable concentrations of ammonia.

BAT OPTION SELECTION-PROMULGATION

After proposal, EPA collected additional data during a sampling episode at one facility in this subcategory. These data include flow and production information, raw wastewater pollutant loadings, and treatment in-place information. These data were used to calculate production normalized flow rates and regulatory flow allowances. These data were also used for recalculating pollutant removal estimates and for revising compliance costs.

EPA promulgated BAT limitations for this subcategory based on iron coprecipitation, chemical precipitation, sedimentation and multimedia filtration, with preliminary treatment consisting of ammonia air stripping. The end-of-pipe technology basis for the BAT limitations being promulgated is the same as that for the proposed limitations with the addition of iron coprecipitation to control molybdenum. In addition, the treatment performance concentrations for toxic metals, upon which the mass limitations are based, are equal to the values used to calculate the proposed mass limitations.

EPA is promulgating multimedia filtration as part of the BAT technology because this technology is demonstrated in the nonferrous metals manufacturing industry, and results in additional removal of priority metals. In addition, filtration adds reliability to the treatment system by making it less susceptible to operator error and to sudden changes in raw wastewater flow and pollutant concentrations.

Implementation of the control and treatment technologies of Option C would remove annually an estimated 395 kilograms of priority metal pollutants, which is 75 kilograms of priority metal pollutants over the estimated BPT removal. The ammonia air stripping technology of Option C would remove annually an estimated 569,296 kilograms of ammonia. Iron coprecipitation would remove annually an estimated 18,532 kg of molybdenum.

WASTEWATER DISCHARGE RATES

A BAT discharge rate was calculated for each subdivision based upon the flows of the existing plants, as determined from analysis of the data collection portfolios. The discharge rate is used with the achievable treatment concentrations to determine BAT effluent limitations. Since the discharge rate may be different for each wastewater source, separate production normalized discharge rates for each of the five wastewater sources were determined and are summarized in Table X-3 (page 3579). The discharge rates are normalized on a production basis by relating the amount of wastewater generated to the mass of the intermediate product which is produced by the process associated with the waste stream in question. These production normalizing parameters, or PNPs, are also listed in

Table X-3.

The promulgated BAT discharge rates are equal to the promulgated BPT discharge rates.

REGULATED POLLUTANT PARAMETERS

The raw wastewater concentrations from individual operations and the subcategory as a whole were examined to select certain pollutants and pollutant parameters for limitation. This examination and evaluation was presented in Section VI. The Agency, however, has chosen not to regulate all six toxic pollutants selected in this analysis.

The high cost associated with analysis for toxic metal pollutants has prompted EPA to develop an alternative method for regulating and monitoring priority pollutant discharges from the nonferrous metals manufacturing category. Rather than developing specific effluent mass limitations and standards for each of the toxic metals found in treatable concentrations in the raw wastewater from a given subcategory, the Agency is promulgating effluent mass limitations only for those pollutants generated in the greatest quantities as shown by the pollutant removal analysis. The pollutants selected for specific limitation are listed below:

115. arsenic
119. chromium
122. lead
124. nickel
ammonia (as N)
molybdenum
iron

By establishing limitations and standards for selected toxic metal pollutants, dischargers will attain the same degree of control over priority metal toxic as they would have been required to achieve had all the priority metal toxic been directly limited.

This approach is technically justified since the treatable concentrations used for chemical precipitation and sedimentation technology are based on optimized treatment for concomitant multiple metals removal. Thus, even though metals have somewhat different theoretical solubilities, they will be removed at very nearly the same rate in a chemical precipitation and sedimentation treatment system operated for multiple metals removal. Filtration as part of the technology basis is likewise justified because this technology removes metals non-preferentially.

The toxic metal pollutants selected for specific limitation in the secondary molybdenum and vanadium subcategory are arsenic, chromium, lead, and nickel. Ammonia, molybdenum and iron are also selected for limitation since the methods

used to control arsenic, chromium, lead, and nickel are not effective in the control of ammonia, molybdenum and iron. The following toxic metal pollutants are excluded from limitation on the basis that they are effectively controlled by the limitations developed for arsenic, chromium, lead, and nickel:

120. copper
128. zinc

EFFLUENT LIMITATIONS

The concentrations achievable by application of BAT are discussed in Section VII of Vol. I and summarized there in Table VII-21 (page 248), with the exception of the treatment effectiveness concentrations for ammonia and molybdenum, which are discussed in Section IX of this supplement. The achievable concentrations, both one day maximum and monthly average values, are multiplied by the BAT normalized discharge flows summarized in Table X-3 to calculate the mass of pollutants allowed to be discharged per mass of product. The results of these calculations in milligrams of pollutant per kilogram of product represent the promulgated BAT effluent limitations and are presented in Table X-4 (page 3580) for each wastewater stream.

Table X-1

POLLUTANT REMOVAL ESTIMATES FOR DIRECT DISCHARGERS
SECONDARY MOLYBDENUM AND VANADIUM SUBCATEGORY

Pollutant	Raw Waste (kg/yr)	Option A Discharge (kg/yr)	Option A Removed (kg/yr)	Option C Discharge (kg/yr)	Option C Removed (kg/yr)
Antimony	8.42	8.42	0	8.42	0
Arsenic	69.69	46.16	23.53	30.77	38.92
Cadmium	0	0	0	0	0
Chromium (Total)	6.88	6.88	0	6.34	0.54
Copper	44.89	44.89	0	35.30	9.59
Cyanide (Total)	1.63	1.63	0	1.63	0
Lead	231.14	10.86	220.28	7.24	223.9
Mercury	0.36	0.36	0	0.36	0
Nickel	142.27	66.97	75.3	19.91	122.36
Selenium	5.25	5.25	0	5.25	0
Silver	0.18	0.18	0	0.18	0
Thallium	3.62	3.62	0	3.62	0
Zinc	2.81	2.81	0	2.81	0
TOTAL PRIORITY POLLUTANTS	517.14	198.03	319.11	121.83	395.31
Ammonia	572,210	2,914	569,296	2,914	569,296
Iron	117	37	80	25	92
Molybdenum	18,643	166	18,477	111	18,532
Vanadium	8,869	23	8,846	23	8,846
TOTAL NONCONVENTIONALS	599,839	3,140	596,699	3,073	596,766
TSS	29,222	1,086	28,136	235	28,987
TOTAL CONVENTIONALS	29,222	1,086	28,136	235	28,987
TOTAL POLLUTANTS	629,578	4,424	625,154	3,430	626,148

TABLE X-2

COST OF COMPLIANCE FOR THE
SECONDARY MOLYBDENUM AND VANADIUM SUBCATEGORY
DIRECT DISCHARGERS

The cost of compliance data are not presented here because the data on which they are based have been claimed to be confidential. EPA determined that the benefits justify the costs for this subcategory.

TABLE X-3

BAT REGULATORY FLOW ALLOWANCES FOR THE SECONDARY MOLYBDENUM AND VANADIUM SUBCATEGORY

Building Block	BAT Regulatory Flow Allowance (l/kkg)	(gal/ton)	PNP
1. Leach tailings	19511	4687	kkg of technical grade molybdenum plus vanadium plus pure grade molybdenum produced
2. Molybdenum filtrate solvent extraction raffinate	58239	13989	kkg of technical grade molybdenum plus vanadium plus pure grade molybdenum produced
3. Vanadium decomposition wet air pollution control	0	0	kkg of vanadium produced by decomposition
4. Molybdenum drying wet air pollution control	0	0	kkg of molybdenum produced
5. Pure grade molybdenum	23280	5592	kkg of pure molybdenum produced

TABLE X-4

BAT MASS LIMITATIONS FOR THE
SECONDARY MOLYBDENUM AND VANADIUM SUBCATEGORY

(a) Leach Tailings BAT

Pollutant or pollutant property	Maximum for any one day	Maximum for monthly average
mg/kg (lb/million lbs) of technical grade molybdenum plus vanadium plus pure grade molybdenum produced		
*Arsenic	27.120	12.097
*Chromium	7.219	2.927
Copper	24.972	11.901
*Lead	5.463	2.536
*Nickel	10.731	7.219
Zinc	19.900	8.195
Aluminum	119.210	52.870
*Ammonia	8078.000	3551.000
Boron	35.895	16.380
Cobalt	2.732	1.366
Germanium	7.219	2.927
*Iron	23.413	11.902
Manganese	5.853	4.487
*Molybdenum	Reserved	Reserved
Tin	7.414	4.293
Titanium	10.341	4.487
Vanadium	1.951	---

*Regulated Pollutant

TABLE X-4 (Continued)

BAT MASS LIMITATIONS FOR THE
SECONDARY MOLYBDENUM AND VANADIUM SUBCATEGORY

(b) Molybdenum Filtrate Solvent Extraction Raffinate BAT

Pollutant or pollutant property	Maximum for any one day	Maximum for monthly average
mg/kg (lb/million lbs) of technical grade molybdenum plus vanadium plus pure grade molybdenum produced		
*Arsenic	80.452	36.108
*Chromium	21.548	8.736
Copper	74.540	35.520
*Lead	16.306	7.571
*Nickel	32.031	21.548
Zinc	59.400	24.460
Aluminum	355.800	157.800
*Ammonia	24114.000	10600.000
Boron	107.200	48.920
Cobalt	8.154	4.076
Germanium	21.550	8.736
*Iron	69.887	35.526
Manganese	17.470	13.400
*Molybdenum	Reserved	Reserved
Tin	22.130	12.810
Titanium	30.870	13.400
Vanadium	5.824	---

*Regulated Pollutant

TABLE X-4 (Continued)

BAT MASS LIMITATIONS FOR THE
SECONDARY MOLYBDENUM AND VANADIUM SUBCATEGORY

(c) Vanadium Decomposition Wet Air Pollution Control BAT

Pollutant or pollutant property	Maximum for any one day	Maximum for monthly average
mg/kg (lb/million lbs) of vanadium produced by decomposition		
*Arsenic	0.000	0.000
*Chromium	0.000	0.000
Copper	0.000	0.000
*Lead	0.000	0.000
*Nickel	0.000	0.000
Zinc	0.000	0.000
Aluminum	0.000	0.000
*Ammonia	0.000	0.000
Boron	0.000	0.000
Cobalt	0.000	0.000
Germanium	0.000	0.000
*Iron	0.000	0.000
Manganese	0.000	0.000
*Molybdenum	0.000	0.000
Tin	0.000	0.000
Titanium	0.000	0.000
Vanadium	0.000	---

*Regulated Pollutant

TABLE X-4 (Continued)

BAT MASS LIMITATIONS FOR THE
SECONDARY MOLYBDENUM AND VANADIUM SUBCATEGORY

(d) Molybdenum Drying Wet Air Pollution Control BAT

Pollutant or pollutant property	Maximum for any one day	Maximum for monthly average
	mg/kg (lb/million lbs) of molybdenum produced	
*Arsenic	0.000	0.000
*Chromium	0.000	0.000
Copper	0.000	0.000
*Lead	0.000	0.000
*Nickel	0.000	0.000
Zinc	0.000	0.000
Aluminum	0.000	0.000
*Ammonia	0.000	0.000
Boron	0.000	0.000
Cobalt	0.000	0.000
Germanium	0.000	0.000
*Iron	0.000	0.000
Manganese	0.000	0.000
*Molybdenum	0.000	0.000
Tin	0.000	0.000
Titanium	0.000	0.000
Vanadium	0.000	---

*Regulated Pollutant

TABLE X-4 (Continued)

BAT MASS LIMITATIONS FOR THE
SECONDARY MOLYBDENUM AND VANADIUM SUBCATEGORY

(e) Pure Grade Molybdenum BAT

Pollutant or pollutant property	Maximum for any one day	Maximum for monthly average
mg/kg (pounds per million pounds) of pure molybdenum produced		
*Arsenic	32.359	14.434
*Chromium	8.614	3.492
Copper	29.798	14.200
*Lead	6.518	3.026
*Nickel	12.804	8.614
Zinc	23.746	9.778
Aluminum	142.200	63.090
*Ammonia (as N)	9038.000	4237.000
Boron	42.830	19.560
Cobalt	3.259	1.630
Germanium	8.614	3.492
*Iron	27.936	14.201
Manganese	6.984	5.354
*Molybdenum	Reserved	Reserved
Tin	8.846	5.122
Titanium	12.340	5.354
Vanadium	2.328	---

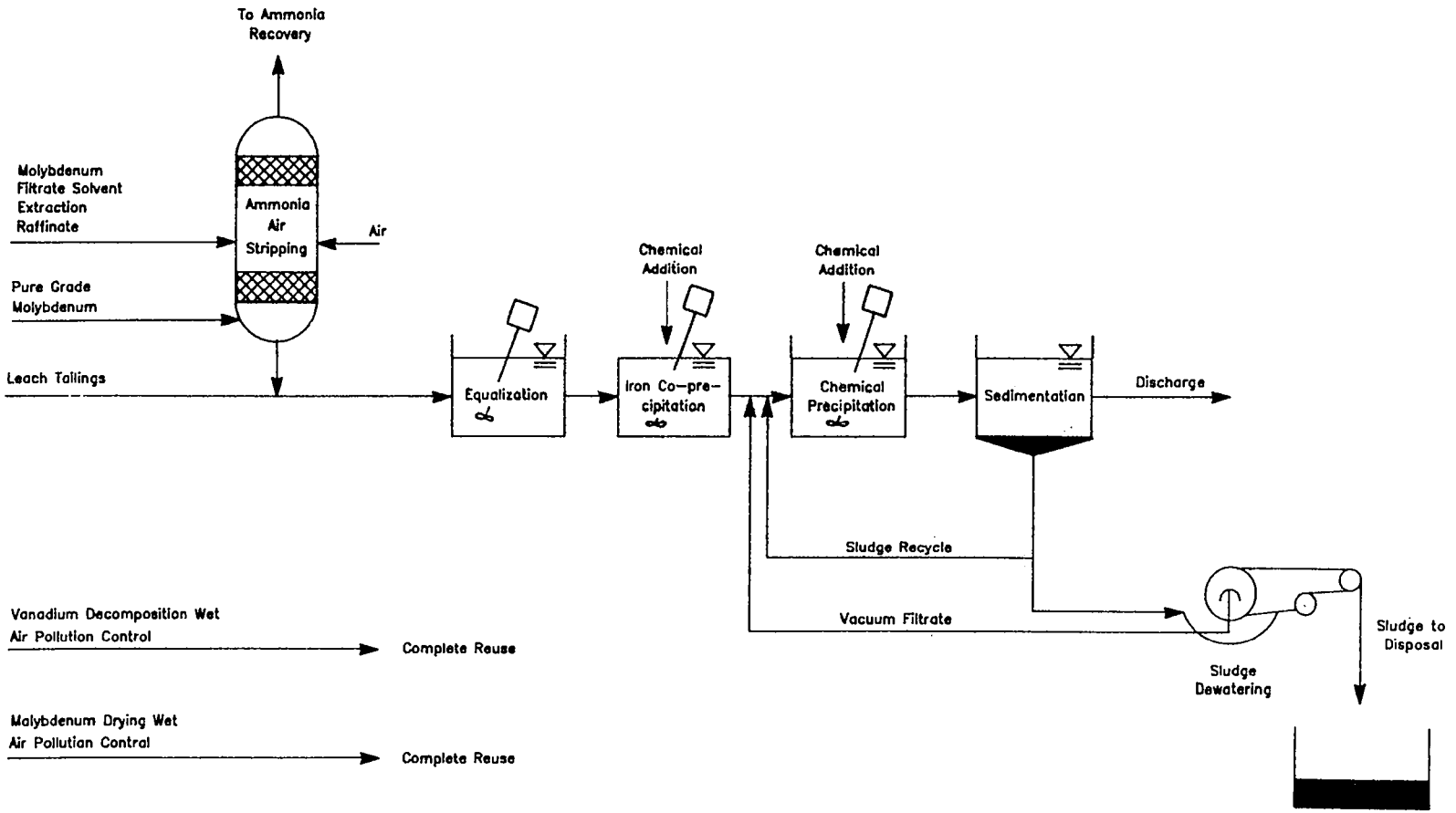

FIGURE X-1. BAT TREATMENT SCHEME FOR OPTION A

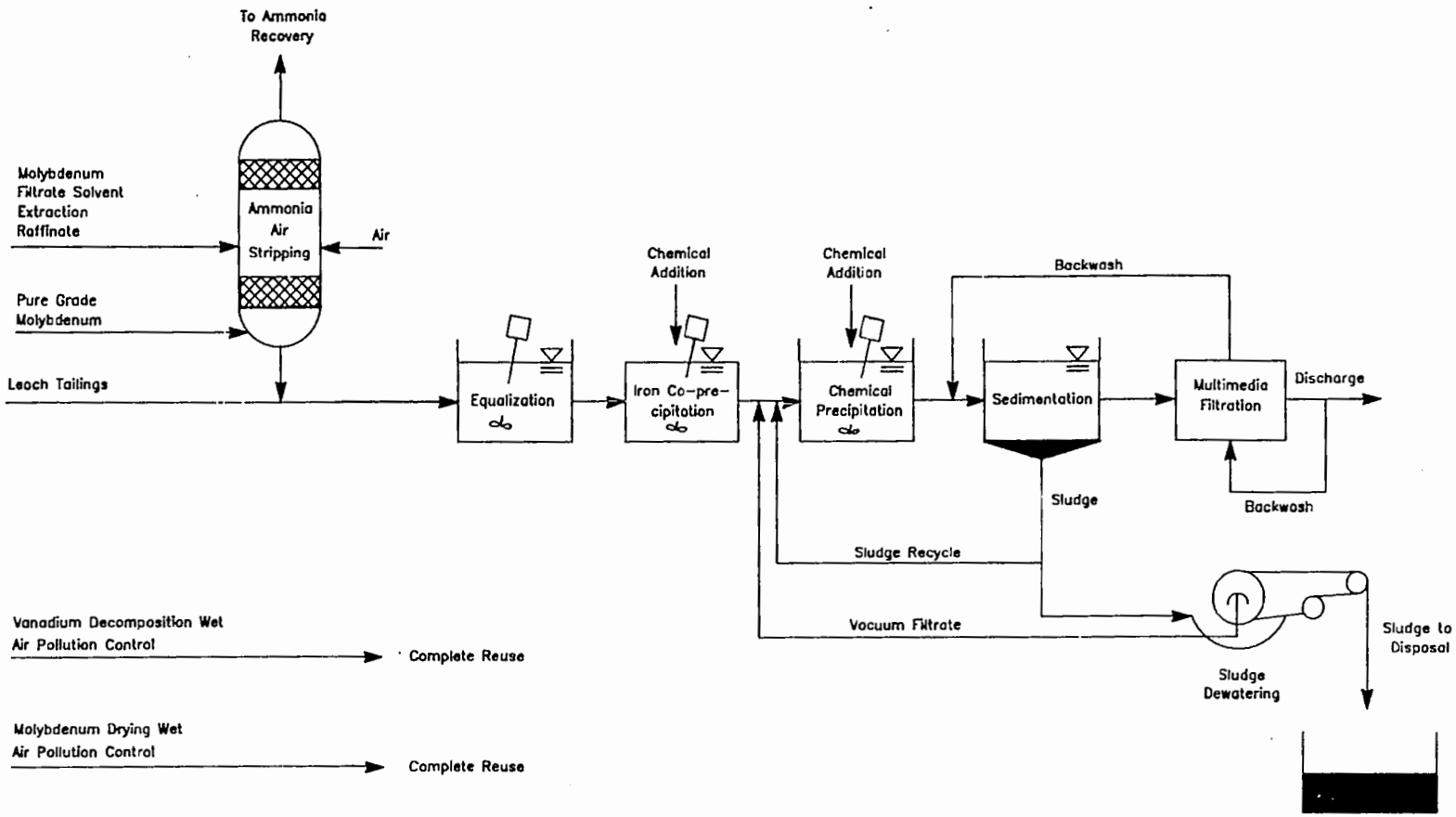

FIGURE X-2. BAT TREATMENT SCHEME FOR OPTION C

SECTION XI

NEW SOURCE PERFORMANCE STANDARDS

This section describes the technologies for treatment of wastewater from new sources and presents mass discharge standards for regulated pollutants for NSPS in the secondary molybdenum and vanadium subcategory, based on the selected treatment technology. New plants have the opportunity to design the best and most efficient production processes and wastewater treatment technologies without facing the added costs and restrictions encountered in retrofitting an existing plant. Therefore, EPA has considered the best demonstrated process changes, in-plant controls and end-of-pipe treatment technologies which reduce pollution to the maximum extent feasible as the basis for NSPS.

TECHNICAL APPROACH TO NSPS

New source performance standards are equivalent to the best available technology (BAT) selected for currently existing secondary molybdenum and vanadium plants. This result is a consequence of careful review by the Agency of a wide range of technical options for new source treatment systems which is discussed in Section XI of Vol. I. Additionally, there was nothing found to indicate that the wastewater flows and characteristics of new plants would not be similar to those from existing plants, since the processes used by new sources are not expected to differ from those used at existing sources. Consequently, BAT production normalized discharge rates, which are based on the best existing practices of the subcategory, can also be applied to new sources. These rates are presented in Table X-3 (page 3579).

Treatment technologies considered for the NSPS options are identical to the treatment technologies considered for the BAT options. These options are:

OPTION A

- o Preliminary treatment with ammonia air stripping (where required)
- o Iron co-precipitation
- o Chemical precipitation and sedimentation

OPTION C

- o Preliminary treatment with ammonia air stripping (where required)
- o Iron co-precipitation
- o Chemical precipitation and sedimentation
- o Multimedia filtration

NSPS OPTION SELECTION-PROPOSAL

EPA proposed that the technology basis for NSPS for the secondary molybdenum and vanadium subcategory be equivalent to Option C (chemical precipitation, sedimentation, and multimedia filtration, with preliminary treatment consisting of ammonia steam stripping).

The wastewater flow rates for NSPS were the same as the proposed BAT flow rates. Flow reduction measures for NSPS and BAT were not considered feasible because no new demonstrated technologies existed within the subcategory that improved on present water use practices in the subcategory. Therefore, EPA concluded that flow reduction beyond the allowances proposed for BPT or BAT was unachievable, and NSPS flow rates should be equal to those for BPT and BAT.

NSPS OPTION SELECTION-PROMULGATION

EPA is promulgating NSPS for the secondary molybdenum and vanadium subcategory equivalent to Option C (iron coprecipitation, chemical precipitation, sedimentation, and multimedia filtration, with preliminary treatment consisting of ammonia air stripping).

The wastewater flow rates for NSPS are the same as the BAT flow rates. The NSPS flow rates are presented in Table X-3 (page 3579). Additional flow reduction and more stringent treatment technologies are not demonstrated in the secondary molybdenum and vanadium subcategory.

REGULATED POLLUTANT PARAMETERS

The Agency has no reason to believe that the pollutants that will be found in treatable concentrations in processes within new sources will be any different than with existing sources. Accordingly, pollutants and pollutant parameters selected for limitations under NSPS, in accordance with the rationale of Sections VI and X, are identical to those selected for BAT. The conventional pollutant parameters TSS and pH are also selected for limitation.

NEW SOURCE PERFORMANCE STANDARDS

The NSPS discharge flows for each wastewater source are the same as the discharge rates for BAT and are shown in Table IX-1 (page 3563). The mass of pollutant allowed to be discharged per mass of

product is calculated by multiplying the appropriate treatment effectiveness concentration (mg/l) by the production normalized wastewater discharge flows (l/kkg). See Section X for a discussion of the use of treatment effectiveness concentrations. The results of these calculations are the mass-based production-related new source performance standards. These promulgated standards are presented in Table XI-1 (page 3590).

TABLE XI-1

NSPS FOR THE SECONDARY MOLYBDENUM AND VANADIUM SUBCATEGORY

(a) Leach Tailings NSPS

Pollutant or pollutant property	Maximum for any one day	Maximum for monthly average
mg/kg (lb/million lbs) of technical grade molybdenum plus vanadium plus pure grade molybdenum produced		
*Arsenic	27.120	12.097
*Chromium	7.219	2.927
Copper	24.970	11.900
*Lead	5.463	2.536
*Nickel	10.731	7.219
Zinc	19.900	8.195
Aluminum	119.200	52.870
*Ammonia	8078.000	3551.000
Boron	35.895	16.384
Cobalt	2.732	1.366
Germanium	7.219	2.927
*Iron	23.413	11.902
Manganese	5.853	4.487
*Molybdenum	Reserved	Reserved
Tin	7.414	4.293
Titanium	10.340	4.487
Vanadium	1.951	---
*TSS	292.665	234.132
*pH	Within the range of 7.5 to 10.0 at all times	

*Regulated Pollutant

TABLE XI-1 (Continued)

NSPS FOR THE SECONDARY MOLYBDENUM
AND VANADIUM SUBCATEGORY

(b) Molybdenum Filtrate Solvent Extraction Raffinate NSPS

Pollutant or pollutant property	Maximum for any one day	Maximum for monthly average
mg/kg (lb/million lbs) of technical grade molybdenum plus vanadium plus pure grade molybdenum produced		
*Arsenic	80.952	36.108
*Chromium	21.548	8.736
Copper	74.540	35.520
*Lead	16.306	7.571
*Nickel	32.031	21.548
Zinc	59.400	24.460
Aluminum	355.800	157.800
*Ammonia	24144.000	10600.000
Boron	107.200	48.920
Cobalt	8.154	4.076
Germanium	21.550	8.736
*Iron	69.887	35.526
Manganese	17.470	13.400
*Molybdenum	Reserved	Reserved
Tin	22.130	12.810
Titanium	30.870	13.400
Vanadium	5.824	---
*TSS	873.585	698.868
*pH	Within the range of 7.5 to 10.0 at all times	

*Regulated Pollutant

TABLE XI-1 (Continued)

NSPS FOR THE SECONDARY MOLYBDENUM
AND VANADIUM SUBCATEGORY

(c) Vanadium Decomposition Wet Air Pollution Control NSPS

Pollutant or pollutant property	Maximum for any one day	Maximum for monthly average
mg/kg (lb/million lbs) of vanadium produced by decomposition		
*Arsenic	0.000	0.000
*Chromium	0.000	0.000
Copper	0.000	0.000
*Lead	0.000	0.000
*Nickel	0.000	0.000
Zinc	0.000	0.000
Aluminum	0.000	0.000
*Ammonia	0.000	0.000
Boron	0.000	0.000
Cobalt	0.000	0.000
Germanium	0.000	0.000
*Iron	0.000	0.000
Manganese	0.000	0.000
*Molybdenum	0.000	0.000
Tin	0.000	0.000
Titanium	0.000	0.000
Vanadium	0.000	---
*TSS	0.000	0.000
*pH	Within the range of 7.5 to 10.0 at all times	

*Regulated Pollutant

TABLE XI-1 (Continued)

NSPS FOR THE SECONDARY MOLYBDENUM
AND VANADIUM SUBCATEGORY

(d) Molybdenum Drying Wet Air Pollution Control NSPS

Pollutant or pollutant property	Maximum for any one day	Maximum for monthly average
	mg/kg (lb/million lbs) of molybdenum produced	
*Arsenic	0.000	0.000
*Chromium	0.000	0.000
Copper	0.000	0.000
*Lead	0.000	0.000
*Nickel	0.000	0.000
Zinc	0.000	0.000
Aluminum	0.000	0.000
*Ammonia	0.000	0.000
Boron	0.000	0.000
Cobalt	0.000	0.000
Germanium	0.000	0.000
*Iron	0.000	0.000
Manganese	0.000	0.000
*Molybdenum	0.000	0.000
Tin	0.000	0.000
Titanium	0.000	0.000
Vanadium	0.000	---
*TSS	0.000	0.000
*pH	Within the range of 7.5 to 10.0 at all times	

*Regulated Pollutant

TABLE XI-1 (Continued)

NSPS MASS LIMITATIONS FOR THE SECONDARY MOLYBDENUM AND VANADIUM SUBCATEGORY

(e) Pure Grade Molybdenum NSPS

Pollutant or pollutant property	Maximum for any one day	Maximum for monthly average
mg/kg (pounds per million pounds) of pure molybdenum produced		
*Arsenic	32.359	14.434
*Chromium	8.614	3.492
Copper	29.798	14.200
*Lead	6.518	3.026
*Nickel	12.804	8.614
Zinc	23.746	9.778
Aluminum	142.200	63.090
*Ammonia (as N)	9638.000	4237.000
Boron	42.830	19.560
Cobalt	3.259	1.630
Germanium	8.614	3.492
*Iron	27.936	14.201
Manganese	6.984	5.354
*Molybdenum	Reserved	Reserved
Tin	88.460	5.122
Titanium	12.340	5.354
Vanadium	2.328	---
TSS	349.200	279.360
*pH	Within the range of 7.5 to 10.0 at all times	

*Regulated Pollutant

SECTION XII

PRETREATMENT STANDARDS

This section describes the control and treatment technologies for pretreatment of process wastewaters from new sources in the secondary molybdenum and vanadium subcategory. PSES are designed to prevent the discharge of pollutants which pass through, interfere with, or are otherwise incompatible with the operation of publicly owned treatment works (POTW). The Clean Water Act also requires pretreatment for pollutants, such as toxic metals, that limit POTW sludge management alternatives. New indirect discharge facilities, like new direct discharge facilities, have the opportunity to incorporate the best available demonstrated technologies, including process changes, in-plant controls, and end-of-pipe treatment technologies, and to use plant site selection to ensure adequate treatment system function. Pretreatment standards are to be technology based, and analogous to the best available or best demonstrated technology for removal of toxic pollutants. Pretreatment standards for regulated pollutants are presented based on the selected control and treatment technology.

PSES is not being promulgated for the secondary molybdenum and vanadium subcategory because there are no existing indirect dischargers in this subcategory. However, pretreatment standards for new sources (PSNS) are promulgated.

TECHNICAL APPROACH TO PRETREATMENT

Before proposing and promulgating pretreatment standards, the Agency examines whether the pollutants discharged by the industry pass through the POTW or interfere with the POTW operation or its chosen sludge disposal practices. In determining whether pollutants pass through a well-operated POTW achieving secondary treatment, the Agency compares the percentage of a pollutant removed by POTW with the percentage removed by direct dischargers applying the best available technology economically achievable. A pollutant is deemed to pass through the POTW when the average percentage removed nationwide by well-operated POTW meeting secondary treatment requirements, is less than the percentage removed by direct dischargers complying with BAT effluent limitations guidelines for that pollutant. (See generally, 46 FR at 9415-16 (January 28, 1981).)

This definition of pass through satisfies two competing objectives set by Congress that standards for indirect dischargers be equivalent to standards for direct dischargers while at the same time, the treatment capability and performance of the POTW be recognized and taken into account in regulating the discharge of pollutants from indirect dischargers.

The Agency compares percentage removal rather than the mass or concentration of pollutants discharged because the latter would not take into account the mass of pollutants discharged to the POTW from non-industrial sources or the dilution of the pollutants in the POTW effluent to lower concentrations due to the addition of large amounts of non-industrial wastewater.

PRETREATMENT STANDARDS FOR NEW SOURCES

Options for pretreatment of wastewaters from new sources are based on increasing the effectiveness of end-of-pipe treatment technologies. All in-plant changes and applicable end-of-pipe treatment processes have been discussed previously in Sections X and XI. The options for PSNS, therefore, are the same as the BAT options discussed in Section X. A description of each option is presented in Section X.

Treatment technologies considered for the PSNS options are:

OPTION A

- o Preliminary treatment with ammonia air stripping (where required)
- o Iron co-precipitation
- o Chemical precipitation and sedimentation

OPTION C

- o Preliminary treatment with ammonia air steam stripping (where required)
- o Iron co-precipitation
- o Chemical precipitation and sedimentation
- o Multimedia filtration

PSNS OPTION SELECTION

Option C (ammonia air stripping, iron co-precipitation, chemical precipitation, sedimentation, and multimedia filtration) has been selected as the regulatory approach for pretreatment standards for new sources (PSNS). Option C prevents pass-through and is equivalent to BAT treatment for direct dischargers. In addition, Option C achieves effective removal of priority pollutants by incorporating filtration which is demonstrated in the nonferrous metals manufacturing category at 25 plants, and will not result in adverse economic impacts.

The wastewater discharge rates for the promulgated PSNS are identical to the promulgated BAT discharge rates for each waste stream. The PSNS regulatory flow rates are identical to the BAT rates and are shown in Table X-2 (page 3579). No flow reduction measures are feasible over the BAT regulatory flow rates because the scrubbers for the vanadium decomposition furnace and the molybdenum drying furnace presently operate at 100 percent water reuse. EPA does not believe that new plants should achieve flow

reduction in any other wastewater streams regulated in this subcategory.

REGULATED POLLUTANT PARAMETERS

Pollutants are selected for limitation in accordance with the rationale of Sections VI and X and are identical to those selected for limitation for BAT. It is necessary to promulgate PSNS to prevent the pass-through of arsenic, chromium, lead, nickel, molybdenum, iron, and ammonia, which are the limited pollutants. These priority pollutants are removed by a well-operated POTW achieving secondary treatment at an average of 23 percent while the NSPS and BAT level technology removes approximately 90 percent.

PRETREATMENT STANDARDS FOR NEW SOURCES

Pretreatment standards for new sources are based on the pollutant concentrations achievable from the selected treatment technologies, (Option C), and the regulatory flow rates determined in Section X for BAT (see Table X-2, page 3579). A mass of pollutant per mass of product (mg/kg) allocation is given for each subdivision within the subcategory. This pollutant allocation is based on the product of the achievable concentration from the selected model treatment (mg/l) and the production normalized wastewater discharge rate (l/kkg). The achievable treatment concentrations for PSNS are identical to those of BAT and are discusses in Section X. PSNS are presented in Table XII-1 (page 3598).

TABLE XII-1

PSNS FOR THE SECONDARY MOLYBDENUM AND VANADIUM SUBCATEGORY

(a) Leach Tailings PSNS

Pollutant or pollutant property	Maximum for any one day	Maximum for monthly average
mg/kg (lb/million lbs) of technical grade molybdenum plus vanadium plus pure grade molybdenum produced		
*Arsenic	27.120	12.097
*Chromium	7.219	2.927
Copper	24.972	11.901
*Lead	5.463	2.536
*Nickel	10.731	7.219
Zinc	19.900	8.195
Aluminum	114.210	52.870
*Ammonia	8078.000	3551.000
Boron	35.895	16.380
Cobalt	2.732	1.366
Germanium	7.219	2.927
*Iron	23.413	11.902
Manganese	5.583	4.487
*Molybdenum	Reserved	Reserved
Tin	7.414	4.293
Titanium	10.341	4.487
Vanadium	1.951	---

*Regulated Pollutant

TABLE XII-1 (Continued)

PSNS FOR THE SECONDARY MOLYBDENUM AND VANADIUM SUBCATEGORY

(b) Molybdenum Filtrate Solvent Extraction Raffinate PSNS

Pollutant or pollutant property	Maximum for any one day	Maximum for monthly average
	mg/kg (lb/million lbs) of technical grade molybdenum plus vanadium plus pure grade molybdenum produced	
*Arsenic	80.952	36.108
*Chromium	21.548	8.736
Copper	74.540	35.520
*Lead	16.306	7.571
*Nickel	32.031	21.548
Zinc	59.400	24.460
Aluminum	355.800	157.800
*Ammonia	24114.000	10600.000
Boron	107.200	48.920
Cobalt	8.154	4.076
Germanium	21.550	8.736
*Iron	69.887	35.526
Manganese	17.470	13.400
*Molybdenum	Reserved	Reserved
Tin	22.130	12.810
Titanium	30.870	13.400
Vanadium	5.824	---

*Regulated Pollutant

TABLE XII-1 (Continued)

PSNS FOR THE SECONDARY MOLYBDENUM AND VANADIUM SUBCATEGORY

(c) Vanadium Decomposition Wet Air Pollution Control NSPS

Pollutant or pollutant property	Maximum for any one day	Maximum for monthly average
mg/kg (lb/million lbs) of vanadium produced by decomposition		
*Arsenic	0.000	0.000
*Chromium	0.000	0.000
Copper	0.000	0.000
*Lead	0.000	0.000
*Nickel	0.000	0.000
Zinc	0.000	0.000
Aluminum	0.000	0.000
*Ammonia	0.000	0.000
Boron	0.000	0.000
Cobalt	0.000	0.000
Germanium	0.000	0.000
*Iron	0.000	0.000
Manganese	0.000	0.000
*Molybdenum	0.000	0.000
Tin	0.000	0.000
Titanium	0.000	0.000
Vanadium	0.000	---

*Regulated Pollutant

TABLE XII-1 (Continued)

PSNS FOR THE SECONDARY MOLYBDENUM AND VANADIUM SUBCATEGORY

(d) Molybdenum Drying Wet Air Pollution Control PSNS

Pollutant or pollutant property	Maximum for any one day	Maximum for monthly average
	mg/kg (lb/million lbs) of molybdenum produced	
*Arsenic	0.000	0.000
*Chromium	0.000	0.000
Copper	0.000	0.000
*Lead	0.000	0.000
*Nickel	0.000	0.000
Zinc	0.000	0.000
Aluminum	0.000	0.000
*Ammonia	0.000	0.000
Boron	0.000	0.000
Cobalt	0.000	0.000
Germanium	0.000	0.000
*Iron	0.000	0.000
Manganese	0.000	0.000
*Molybdenum	0.000	0.000
Tin	0.000	0.000
Titanium	0.000	0.000
Vanadium	0.000	---

*Regulated Pollutant

TABLE XII-1 (Continued)

PSNS FOR THE SECONDARY MOLYBDENUM AND VANADIUM SUBCATEGORY

(e) Pure Grade Molybdenum PSNS

Pollutant or pollutant property	Maximum for any one day	Maximum for monthly average
mg/kg (lb/million lbs) of pure molybdenum produced		
*Arsenic	32.359	14.434
*Chromium	8.614	3.492
Copper	29.798	14.200
*Lead	6.518	3.026
*Nickel	12.804	8.614
Zinc	23.746	9.778
Aluminum	142.200	63.090
*Ammonia (as N)	4638.000	4237.000
Boron	42.830	19.560
Cobalt	3.259	1.630
Germanium	8.614	3.492
*Iron	27.936	14.201
Manganese	6.984	5.354
*Molybdenum	Reserved	Reserved
Tin	8.846	5.122
Titanium	12.340	5.354
Vanadium	2.328	---

*Regulated Pollutant

SECTION XIII

BEST CONVENTIONAL POLLUTANT CONTROL TECHNOLOGY

EPA is not promulgating best conventional pollutant control technology (BCT) for the secondary molybdenum and vanadium subcategory at this time.

THIS PAGE INTENTIONALLY LEFT BLANK