United States
Environmental Protection
Agency

Office of Water Regulations
and Standards (WH-552)
Industrial Technology Division
Washington, DC 20460

EPA 440/1-89-019.8
May 1989

Office of Water

EPA

Development Document for Effluent Limitations Guidelines and Standards for the Nonferrous Metals Manufacturing Point Source Category

FINAL

Volume VIII
Primary Columbium—Tantalum
Secondary Tantalum
Secondary Uranium

Printed on Recycled Paper

ORGANIZATION OF THIS DOCUMENT

This development document for the nonferrous metals manufacturing category consists of a general development document which considers the general and overall aspects of the regulation and 31 subcategory specific supplements. These parts are organized into 10 volumes as listed below.

The information in the general document and in the supplements is organized by sections with the same type of information reported in the same section of each part. Hence to find information on any specific aspect of the category one would need only look in the same section of the general document and the specific supplements of interest.

The ten volumes contain contain the following subjects:

Volume I	General Development Document
Volume II	Bauxite Refining Primary Aluminum Smelting Secondary Aluminum Smelting
Volume III	Primary Copper Smelting Primary Electrolytic Copper Refining Secondary Copper Refining Metallurgical Acid Plants
Volume IV	Primary Zinc Primary Lead Secondary Lead Primary Antimony
Volume V	Primary Precious Metals and Mercury Secondary Precious Metals Secondary Silver Secondary Mercury
Volume VI	Primary Tungsten Secondary Tungsten and Cobalt Primary Molybdenum and Rhenium Secondary Molybdenum and Vanadium
Volume VII	Primary Beryllium Primary Nickel and Cobalt Secondary Nickel Secondary Tin
Volume VIII	Primary Columbium and Tantalum Secondary Tantalum Secondary Uranium
Volume IX	Primary and Secondary Titanium Primary Zirconium and Hafnium
Volume X	Primary and Secondary Germanium and Gallium Primary Rare Earth Metals Secondary Indium

DEVELOPMENT DOCUMENT

for

EFFLUENT LIMITATIONS GUIDELINES AND STANDARDS

for the

NONFERROUS METALS MANUFACTURING POINT SOURCE CATEGORY

VOLUME VIII

Primary Columbium and Tantalum
Secondary Tantalum
Secondary Uranium

William K. Reilly
Administrator

Rebecca Hanmer, Acting
Assistant Administrator for Water

Martha Prothro, Director
Office of Water Regulations and Standards

Thomas P. O'Farrell, Director
Industrial Technology Division

Ernst P. Hall, P.E., Chief
Metals Industry Branch
and
Technical Project Officer

May 1989

U.S. Environmental Protection Agency
Office of Water
Office of Water Regulations and Standards
Industrial Technology Division
Washington, D. C. 20460

TABLE OF CONTENTS

Supplement	Page
Primary Columbium and Tantalum	4319
Secondary Tantalum	4527
Secondary Uranium	4643

For detailed contents see detailed contents list in individual supplement.

NONFERROUS METALS MANUFACTURING POINT SOURCE CATEGORY

DEVELOPMENT DOCUMENT SUPPLEMENT

for the

Primary Columbium and Tantalum Subcategory

William K. Reilly
Administrator

Rebecca Hanmer
Acting Assistant Administrator for Water

Martha Prothro, Director
Office of Water Regulations and Standards

Thomas P. O'Farrell, Director
Industrial Technology Division

Ernst P. Hall, P.E., Chief
Metals Industry Branch
and
Technical Project Officer

May 1989

U.S. Environmental Protection Agency
Office of Water
Office of Water Regulations and Standards
Industrial Technology Division
Washington, D. C. 20460

PRIMARY COLUMBIUM AND TANTALUM SUBCATEGORY

TABLE OF CONTENTS

Section		Page
I	SUMMARY	4329
II	CONCLUSIONS	4331
III	SUBCATEGORY PROFILE	4351
	Description of Primary Columbium and Tantalum Production	4351
	Raw Materials	4351
	Digestion of Ore or Slag	4351
	Separation of Salts	4352
	Reduction of Salt to Metal	4353
	Consolidation and Casting	4353
	Process Wastewater Sources	4354
	Other Wastewater Sources	4354
	Age, Production, and Process Profile	4355
IV	SUBCATEGORIZATION	4362
	Factors Considered in Subdividing the Primary Columbium and Tantalum Subcategory	4362
	Other Factors	4363
	Production Normalizing Parameters	4363
V	WATER USE AND WASTEWATER CHARACTERISTICS	4365
	Wastewater Sources, Discharge Rates and Characteristics	4365
	Concentrate Digestion Wet Air Pollution Control	4368
	Solvent Extraction Raffinate	4368
	Solvent Extraction Wet Air Pollution Control	4369
	Precipitation and Filtration of Metal Salt	4369
	Precipitation and Filtration Wet Air Pollution Control	4369
	Tantalum Salt Drying	4369
	Oxides Calcining Wet Air Pollution Control	4370
	Reduction of Tantalum Salt To Metal Wastewater	4370
	Reduction of Tantalum Salt To Metal Wet Air Pollution Control	4370
	Tantalum Powder Wash and Scrubber	4370
	Consolidation and Casting Contact Cooling	4371

TABLE OF CONTENTS (Continued)

Section		Page
VI	SELECTION OF POLLUTANT PARAMETERS	4425
	Conventional and Nonconventional Pollutant Parameters Selected	4425
	Toxic Pollutants	4426
	Toxic Pollutants Never Detected	4426
	Toxic Pollutants Never Found Above Their Analytical Quantification Limit	4427
	Toxic Pollutants Present Below Concentrations Achievable by Treatment	4427
	Toxic Pollutants Detected in a Small Number of Sources	4427
	Toxic Pollutants Selected for Further Consideration for Limitations and Standards	4430
VII	CONTROL AND TREATMENT TECHNOLOGIES	4441
	Current Control and Treatment Practices	4441
	Concentrate Digestion Wet Air Pollution Control	4441
	Solvent Extraction Raffinate	4441
	Solvent Extraction Wet Air Pollution Control	4442
	Precipitation and Filtration	4442
	Precipitation and Filtration Wet Air Pollution Control	4442
	Tantalum Salt Drying	4443
	Oxides Calcining Wet Air Pollution Control	4443
	Reduction of Tantalum Salt To Metal	4443
	Reduction of Tantalum Salt To Metal Wet Air Pollution Control	4443
	Tantalum Powder Wash	4444
	Consolidation and Casting Contact Cooling	4444
	Control and Treatment Options	4444
	Option A	4444
	Option B	4444
	Option C	4444
	Control and Treatment Options Rejected	4445
VIII	COSTS, ENERGY, AND NONWATER QUALITY ASPECTS	4447
	Treatment Options Costed for Existing Sources	4447
	Option A	4447
	Option B	4447
	Option C	4447
	Cost Methodology	4448
	Nonwater Quality Aspects	4448
	Energy Requirements	4448
	Solid Waste	4448
	Air Pollution	4450

TABLE OF CONTENTS (Continued)

Section		Page
IX	BEST PRACTICABLE CONTROL TECHNOLOGY CURRENTLY AVAILABLE	4455
	Technical Approach to BPT	4455
	Industry Cost and Pollutant Removal Estimates	4457
	BPT Option Selection	4457
	Wastewater Discharge Rates	4459
	Concentrate Digestion Wet Air Pollution Control	4459
	Solvent Extraction Raffinate	4460
	Solvent Extraction Wet Air Pollution Control	4461
	Precipitation and Filtration of Metal Salt	4461
	Precipitation and Filtration Wet Air Pollution Control	4462
	Tantalum Salt Drying Wet Air Pollution Control	4462
	Oxides Calcining Wet Air Pollution Control	4462
	Reduction of Tantalum Salt To Metal	4463
	Reduction of Tantalum Salt To Metal Wet Air Pollution Control	4463
	Tantalum Powder Wash and Scrubber	4463
	Consolidation and Casting Contact Cooling	4464
	Regulated Pollutant Parameters	4464
	Effluent Limitations	4464
X	BEST AVAILABLE TECHNOLOGY ECONOMICALLY ACHIEVABLE	4475
	Technical Approach to BAT	4475
	Option A	4476
	Option B	4476
	Recycle of Water Used in Wet A P C	4476
	Option C	4477
	Pollutant Removal Estimates	4477
	Compliance Costs	4478
	BAT Option Selection	4478
	Wastewater Discharge Rates	4479
	Concentrate Digestion Wet Air Pollution Control	4479
	Solvent Extraction Wet Air Pollution Control	4480
	Precipitation and Filtration Wet Air Pollution Control	4480
	Oxides Calcining Wet Air Pollution Control	4480
	Reduction of Tantalum Salt To Metal Wet Air Pollution Control	4481
	Regulated Pollutant Parameters	4481
	Effluent Limitations	4482
XI	NEW SOURCE PERFORMANCE STANDARDS	4497
	Technical Approach to NSPS	4497
	Regulated Pollutant Parameters	4498
	New Source Performance Standards	4498

TABLE OF CONTENTS (Continued)

Section		Page
XII	PRETREATMENT STANDARDS	4507
	Technical Approach to Pretreatment	4507
	Pretreatment Standards for Existing and New Sources	4508
	Industry Cost and Pollutant Removal Estimates	4508
	PSES and PSNS Option Selection	4508
	Regulated Pollutant Parameters	4509
	Pretreatment Standards	4509
XIII	BEST CONVENTIONAL POLLUTANT CONTROL TECHNOLOGY	4525

LIST OF TABLES

Table	Title	Page
III-1	Initial Operating Year (Range) Summary of Plants in the Primary Columbium - Tantalum Subcategory By Discharge Type	4356
III-2	Production Ranges for the Primary Columbium - Tantalum Subcategory	4357
III-3	Production Processes Utilized by the Primary Columbium - Tantalum Subcategory	4358
V-1	Water Use and Discharge Rate for Concentrate Digestion Wet Air Pollution Control	4372
V-2	Primary Columbium - Tantalum Sampling Data Concentrate Digestor Scrubber Raw Wastewater	4373
V-3	Water Use and Discharge Rate for Solvent Extraction Raffinate	4378
V-4	Primary Columbium - Tantalum Sampling Data Solvent Extraction Raffinate Raw Wastewater	4379
V-5	Water Use and Discharge Rate for Solvent Extraction Wet Air Pollution Control	4383
V-6	Primary Columbium - Tantalum Sampling Data Solvent Extraction Scrubber Raw Wastewater	4384
V-7	Water Use and Discharge Rate for Precipitation and Filtration of Columbium - Tantalum Salt	4387
V-8	Primary Columbium - Tantalum Sampling Data Precipitation and Filtration Raw Wastewater	4388
V-9	Water Use and Discharge Rate for Precipitation and Filtration Wet Air Pollution Control	4391
V-10	Water Use and Discharge Rate for Tantalum Salt Drying	4392
V-11	Water Use and Discharge Rate for Oxides Calcining Wet Air Pollution Control	4393
V-12	Primary Columbium - Tantalum Sampling Data Metal Salt Drying Scrubber, Reduction of Salt to Metal and Reduction of Salt to Metal Scrubbers Raw Wastewater	4394

LIST OF TABLES (Continued)

Table	Title	Page
V-13	Water Use and Discharge Rate for Reduction of Tantalum Salt to Metal	4400
V-14	Water Use and Discharge Rate for Reduction of Salt to Metal Wet Air Pollution Control	4401
V-15	Primary Columbium - Tantalum Sampling Data Miscellaneous Raw Wastewater - Plant A	4402
V-16	Primary Columbium - Tantalum Sampling Data Miscellaneous Raw Wastewater - Plant B	4404
V-17	Primary Columbium - Tantalum Sampling Data Miscellaneous Raw Wastewater - Plant C	4407
V-18	Primary Columbium - Tantalum Sampling Data Miscellaneous Treatment Plant Samples - Plant A	4411
V-19	Primary Columbium - Tantalum Sampling Data Miscellaneous Treatment Plant Samples - Plant B	4414
V-20	Primary Columbium - Tantalum Sampling Data Miscellaneous Treatment Plant Samples - Plant D	4417
VI-1	Frequency of Occurrence of Priority Pollutants Primary Columbium - Tantalum Subcategory Raw Wastewater	4435
VI-2	Priority Pollutants Never Detected	4439
VIII-1	Cost of Compliance for the Primary Columbium - Tantalum Subcategory Direct Dischargers	4452
VIII-2	Cost of Compliance for the Primary Columbium - Tantalum Subcategory Indirect Dischargers	4453
IX-1	BPT Wastewater Discharge Rates for the Primary Columbium - Tantalum Subcategory	4465
IX-2	BPT Effluent Limitations for the Primary Columbium - Tantalum Subcategory	4467
X-1	Current Recycle Practices Within the Primary Columbium - Tantalum Subcategory	4484

LIST OF TABLES (Continued)

Table	Title	Page
X-2	Pollutant Removal Estimates for Primary Columbium - Tantalum Direct Dischargers	4485
X-3	BAT Wastewater Discharge Rates for the Primary Columbium - Tantalum Subcategory	4486
X-4	BAT Effluent Limitations for the Primary Columbium - Tantalum Subcategory	4488
XI-1	NSPS Wastewater Discharge Rates for the Primary Columbium - Tantalum Subcategory	4499
XI-2	NSPS for the Primary Columbium - Tantalum Subcategory	4501
XII-1	Pollutant Removal Estimates for Primary Columbium - Tantalum Indirect Dischargers	4510
XII-2	PSES and PSNS Wastewater Discharge Rates for the Primary Columbium - Tantalum Subcategory	4511
XII-3	PSES for the Primary Columbium - Tantalum Subcategory	4513
XII-4	PSNS for the Primary Columbium - Tantalum Subcategory	4519

LIST OF FIGURES

Figure	Title	Page
III-1	Primary Columbium - Tantalum Production Process	4359
III-2	Geographic Locations of the Primary Antimony Subcategory Plants	4361
V-1	Sampling Sites at Columbium - Tantalum Plant A	4420
V-2	Sampling Sites at Columbium - Tantalum Plant B	4422
V-3	Sampling Sites at Columbium - Tantalum Plant C	4423
V-4	Sampling Sites at Columbium - Tantalum Plant D	4424
IX-1	BPT Treatment Scheme Primary Columbium - Tantalum Subcategory	4473
X-1	BAT Treatment Scheme Option A Primary Columbium - Tantalum Subcategory	4494
X-2	BAT Treatment Scheme Option B Primary Columbium - Tantalum Subcategory	4495
X-3	BAT Treatment Scheme Option C Primary Columbium - Tantalum Subcategory	4496

SECTION I

SUMMARY

This document provides the technical basis for promulgating effluent limitations based on best practicable technology (BPT) and best available technology (BAT) for direct dischargers, pretreatment standards for indirect dischargers (PSES), pretreatment standards for new indirect dischargers (PSNS), and standards of performance for new source direct dischargers (NSPS) for the primary columbium-tantalum subcategory.

The primary columbium-tantalum subcategory consists of five plants. Of the five plants, three discharge directly to rivers, lakes, or streams; two discharge to publicly owned treatment works (POTW); and none achieve zero discharge of process wastewater.

EPA first studied the primary columbium-tantalum subcategory to determine whether differences in raw materials, final products, manufacturing processes, equipment, age and size of plants, and water usage, required the development of separate effluent limitations and standards for different segments of the subcategory. This involved a detailed analysis of wastewater discharge and treated effluent characteristics, including (1) the sources and volume of water used, the processes employed, and the sources of pollutants and wastewaters in the plant; and (2) the constituents of wastewaters, including toxic pollutants.

Several distinct control and treatment technologies (both in-plant and end-of-pipe) applicable to the primary columbium-tantalum subcategory were identified. The Agency analyzed both historical and newly generated data on the performance of these technologies, including their nonwater quality environmental impacts (air quality and solid waste generation) and energy requirements. EPA also studied various flow reduction techniques reported in the data collection portfolios (dcp) and plant visits.

Engineering costs were prepared for each of the control and treatment options considered for the subcategory. These costs were then used by the Agency to estimate the impact of implementing the various options on the industry. For each control and treatment option that the Agency found to be most effective and technically feasible in controlling the discharge of pollutants, the number of potential closures, number of employees affected, and impact on price were estimated. These results are reported in a separate document entitled <u>The Economic Impact Analysis of Effluent Limitations and Standards for the Nonferrous Smelting and Refining Industry</u>.

Based on consideration of the above factors, EPA identified various control and treatment technologies which formed the basis

for BPT and selected control and treatment appropriate for each set of standards and limitations. The mass limitations and standards for BPT, BAT, NSPS, PSES, and PSNS are presented in Section II.

After examining the various treatment technologies, the Agency has identified BPT to represent the average of the best existing technology. Metals removal based on lime precipitation and sedimentation technology is the basis for the BPT limitations. Steam stripping is selected as the technology basis for ammonia limitations. To meet the BPT effluent limitations based on this technology, the primary columbium-tantalum subcategory is expected to incur a capital cost of $680,000 (1982 dollars) and annual cost of $1,140,000 (1982 dollars).

For BAT, the Agency has built upon the BPT basis by adding in-process control technologies which include recycle of process water from air pollution control and metal contact cooling wastewater streams. Filtration is added as an effluent polishing step to the end-of-pipe treatment scheme. To meet the BAT effluent limitations based on this technology, the primary columbium-tantalum subcategory is estimated to incur a capital cost of $830,000 and an annual cost of $1,202,000.

The best demonstrated technology (BDT), which is the technical basis of NSPS, is equivalent to BAT. In selecting BDT, EPA recognizes that new plants have the opportunity to implement the best and most efficient manufacturing processes and treatment technology. As such, the technology basis of BAT has been determined as the best demonstrated technology.

The Agency selected the same technology as BAT for PSES. To meet the pretreatment standards for existing sources, the primary columbium-tantalum subcategory is estimated to incur a capital cost of $1,030,000 and an annual cost of $701,000. For PSNS, the Agency selected end-of-pipe treatment and in-process flow reduction control techniques equivalent to NSPS.

SECTION II

CONCLUSIONS

EPA has divided the primary columbium-tantalum subcategory into 11 subdivisions for the purpose of effluent limitations and standards. These subdivisions are:

(a) Concentrate digestion wet air pollution control,
(b) Solvent extraction raffinate,
(c) Solvent extraction wet air pollution control,
(d) Precipitation and filtration,
(e) Precipitation and filtration wet air pollution control,
(f) Tantalum salt drying,
(g) Oxides calcining wet air pollution control,
(h) Reduction of tantalum salt to metal,
(i) Reduction of tantalum salt to metal wet air pollution control,
(j) Tantalum powder wash and wet air pollution control, and
(k) Consolidation and casting contact cooling.

BPT is promulgated based on the effluent concentrations achievable by the application of chemical precipitation and sedimentation (lime and settle) technology, along with preliminary treatment consisting of ammonia steam stripping for selected waste streams. The following BPT effluent limitations are promulgated:

(a) Concentrate Digestion Wet Air Pollution Control BPT

Pollutant or Pollutant Property	Maximum for Any One Day	Maximum for Monthly Average
Metric Units - mg/kg of concentrate digested English Units - lbs/million lbs of concentrate digested		
Lead	2.612	1.244
Zinc	9.080	3.794
Ammonia (as N)	829.000	364.500
Fluoride	217.700	124.400
TSS	255.000	121.300
pH	Within the range of 7.0 to 10.0 at all times	

(b) Solvent Extraction Raffinate BPT

Pollutant or Pollutant Property	Maximum for Any One Day	Maximum for Monthly Average
Metric Units - mg/kg of concentrate digested English Units - lbs/million lbs of concentrate digested		
Lead	3.845	1.831
Zinc	13.370	5.585
Ammonia (as N)	1,221.000	536.500
Fluoride	320.400	183.100
TSS	375.400	178.500
pH	Within the range of 7.0 to 10.0 at all times	

(c) Solvent Extraction Wet Air Pollution Control BPT

Pollutant or Pollutant Property	Maximum for Any One Day	Maximum for Monthly Average
Metric Units - mg/kg of concentrate digested English Units - lbs/million lbs of concentrate digested		
Lead	1.032	0.491
Zinc	3.586	1.498
Ammonia (as N)	327.400	143.900
Fluoride	85.960	49.120
Total Suspended Solids	100.700	47.890
pH	Within the range of 7.0 to 10.0 at all times	

(d) Precipitation and Filtration BPT

Pollutant or Pollutant Property	Maximum for Any One Day	Maximum for Monthly Average
Metric Units - mg/kg of concentrate digested English Units - lbs/million lbs of concentrate digested		
Lead	5.570	2.738
Zinc	19.990	8.350
Ammonia (as N)	1,825.000	802.200
Fluoride	479.100	273.800
TSS	561.300	267.000
pH	Within the range of 7.0 to 10.0 at all times	

(e) Precipitation and Filtration Wet Air Pollution Control BPT

Pollutant or Pollutant Property	Maximum for Any One Day	Maximum for Monthly Average
Metric Units - mg/kg of concentrate digested English Units - lbs/million lbs of concentrate digested		
Lead	26.680	12.700
Zinc	92.730	38.740
Ammonia (as N)	8,466.000	3,722.000
Fluoride	2,223.000	1,270.000
TSS	2,604.000	1,239.000
pH	Within the range of 7.0 to 10.0 at all times	

(f) Tantalum Salt Drying BPT

Pollutant or Pollutant Property	Maximum for Any One Day	Maximum for Monthly Average
Metric Units - mg/kg of tantalum salt dried English Units - lbs/million lbs of tantalum salt dried		
Lead	25.430	12.110
Zinc	88.390	36.930
Ammonia (as N)	8,070.000	3,548.000
Fluoride	2,119.000	1,211.000
TSS	2,482.000	1,181.000
pH	Within the range of 7.0 to 10.0 at all times	

(g) Oxides Calcining Wet Air Pollution Control BPT

Pollutant or Pollutant Property	Maximum for Any One Day	Maximum for Monthly Average
Metric Units - mg/kg of columbium-tantalum oxide dried English Units - lbs/million lbs of columbium-tantalum oxide dried		
Lead	16.140	7.685
Zinc	56.100	23.440
Ammonia (as N)	5,122.000	2,252.000
Fluoride	1,345.000	768.500
TSS	1,576.000	749.200
pH	Within the range of 7.0 to 10.0 at all times	

(h) Reduction of Tantalum Salt to Metal BPT

Pollutant or Pollutant Property	Maximum for Any One Day	Maximum for Monthly Average
Metric Units - mg/kg of tantalum salt reduced English Units - lbs/million lbs of tantalum salt reduced		
Lead	69.750	33.220
Zinc	242.500	101.300
Ammonia (as N)	22,140.000	9,732.000
Fluoride	5,813.000	3,322.000
TSS	6,809.000	3,239.000
pH	Within the range of 7.0 to 10.0 at all times	

(i) Reduction of Tantalum Salt to Metal Wet Air Pollution Control BPT

Pollutant or Pollutant Property	Maximum for Any One Day	Maximum for Monthly Average
Metric Units - mg/kg of tantalum salt reduced English Units - lbs/million lbs of tantalum salt reduced		
Lead	0.858	0.409
Zinc	2.983	1.246
Ammonia (as N)	272.400	119.700
Fluoride	71.510	40.860
TSS	83.770	39.840
pH	Within the range of 7.0 to 10.0 at all times	

(j) Tantalum Powder Wash BPT

Pollutant or Pollutant Property	Maximum for Any One Day	Maximum for Monthly Average
Metric Units - mg/kg of tantalum powder washed English Units - lbs/million lbs of tantalum powder washed		
Lead	8.582	4.087
Zinc	29.830	12.470
Ammonia (as N)	2,724.000	1,198.000
Fluoride	715.200	408.700
TSS	837.800	398.500
pH	Within the range of 7.0 to 10.0 at all times	

(k) Consolidation and Casting Contact Cooling BPT

Pollutant or Pollutant Property	Maximum for Any One Day	Maximum for Monthly Average
Metric Units - mg/kg of columbium or tantalum cast or consolidated		
English Units - lbs/million lbs of columbium or tantalum cast or consolidated		
Lead	0.000	0.000
Zinc	0.000	0.000
Ammonia (as N)	0.000	0.000
Fluoride	0.000	0.000
TSS	0.000	0.000
pH	Within the range of 7.0 to 10.0 at all times	

BAT is promulgated based on the effluent concentrations achievable by the application of chemical precipitation, sedimentation, and multimedia filtration (lime, settle, and filter) technology and in-process flow reduction control methods, along with preliminary treatment consisting of ammonia steam stripping for selected waste streams. The following BAT effluent limitations are promulgated:

(a) Concentrate Digestion Wet Air Pollution Control BAT

Pollutant or Pollutant Property	Maximum for Any One Day	Maximum for Monthly Average
Metric Units - mg/kg of concentrate digested		
English Units - lbs/million lbs of concentrate digested		
Lead	0.174	0.081
Zinc	0.635	0.261
Ammonia (as N)	82.910	36.450
Fluoride	21.770	12.440

(b) Solvent Extraction Raffinate BAT

Pollutant or Pollutant Property	Maximum for Any One Day	Maximum for Monthly Average
Metric Units - mg/kg of concentrate digested		
English Units - lbs/million lbs of concentrate digested		
Lead	2.564	1.190
Zinc	9.338	3.845
Ammonia (as N)	1,221.000	536.500
Fluoride	320.400	183.100

(c) Solvent Extraction Wet Air Pollution Control BAT

Pollutant or Pollutant Property	Maximum for Any One Day	Maximum for Monthly Average
Metric Units - mg/kg of concentrate digested English Units - lbs/million lbs of concentrate digested		
Lead	0.069	0.032
Zinc	0.251	0.103
Ammonia (as N)	32.790	14.420
Fluoride	8.610	4.920

(d) Precipitation and Filtration BAT

Pollutant or Pollutant Property	Maximum for Any One Day	Maximum for Monthly Average
Metric Units - mg/kg of concentrate digested English Units - lbs/million lbs of concentrate digested		
Lead	3.833	1.780
Zinc	13.960	5.750
Ammonia (as N)	1,825.000	802.200
Fluoride	479.100	273.800

(e) Precipitation and Filtration Wet Air Pollution Control BAT

Pollutant or Pollutant Property	Maximum for Any One Day	Maximum for Monthly Average
Metric Units - mg/kg of concentrate digested English Units - lbs/million lbs of concentrate digested		
Lead	1.778	0.826
Zinc	6.478	2.668
Ammonia (as N)	846.600	372.200
Fluoride	222.300	127.000

(f) Tantalum Salt Drying BAT

Pollutant or Pollutant Property	Maximum for Any One Day	Maximum for Monthly Average
Metric Units - mg/kg of tantalum salt dried English Units - lbs/million lbs of tantalum salt dried		
Lead	16.950	7.871
Zinc	61.750	25.430
Ammonia (as N)	8,070.000	3,548.000
Fluoride	2,119.000	1,211.000

(g) Oxides Calcining Wet Air Pollution Control BAT

Pollutant or Pollutant Property	Maximum for Any One Day	Maximum for Monthly Average
Metric Units - mg/kg of columbium-tantalum oxide dried English Units - lbs/million lbs of columbium-tantalum oxide dried		
Lead	1.076	0.500
Zinc	3.919	1.614
Ammonia (as N)	512.200	225.200
Fluoride	134.500	76.840

(h) Reduction of Tantalum Salt to Metal BAT

Pollutant or Pollutant Property	Maximum for Any One Day	Maximum for Monthly Average
Metric Units - mg/kg of tantalum salt reduced English Units - lbs/million lbs of tantalum salt reduced		
Lead	46.500	21.590
Zinc	169.400	69.750
Ammonia (as N)	22,140.000	9,732.000
Fluoride	5,813.000	3,322.000

(i) Reduction of Tantalum Salt to Metal Wet Air Pollution Control BAT

Pollutant or Pollutant Property	Maximum for Any One Day	Maximum for Monthly Average
Metric Units - mg/kg of tantalum salt reduced English Units - lbs/million lbs of tantalum salt reduced		
Lead	0.572	0.266
Zinc	2.084	0.858
Ammonia (as N)	272.400	119.700
Fluoride	71.510	40.860

(j) Tantalum Powder Wash BAT

Pollutant or Pollutant Property	Maximum for Any One Day	Maximum for Monthly Average
Metric Units - mg/kg of tantalum powder washed English Units - lbs/million lbs of tantalum powder washed		
Lead	5.721	2.656
Zinc	20.840	8.582
Ammonia (as N)	2,724.000	1,198.000
Fluoride	715.200	408.700

(k) Consolidation and Casting Contact Cooling BAT

Pollutant or Pollutant Property	Maximum for Any One Day	Maximum for Monthly Average
Metric Units - mg/kg of columbium or tantalum cast or consolidated English Units - lbs/million lbs of columbium or tantalum cast or consolidated		
Lead	0.000	0.000
Zinc	0.000	0.000
Ammonia (as N)	0.000	0.000
Fluoride	0.000	0.000

NSPS are promulgated based on the effluent concentrations achievable by the application of chemical precipitation, sedimentation, and multimedia filtration (lime, settle, and filter) technology and in-process flow reduction control methods, along with preliminary treatment consisting of ammonia steam stripping for selected waste streams. The following effluent standards are promulgated for new sources:

(a) Concentrate Digestion Wet Air Pollution Control NSPS

Pollutant or Pollutant Property	Maximum for Any One Day	Maximum for Monthly Average
Metric Units - mg/kg of concentrate digested English Units - lbs/million lbs of concentrate digested		
Lead	0.174	0.081
Zinc	0.635	0.261
Ammonia	82.910	36.450
Fluoride	21.770	12.440
TSS	9.330	7.464
pH	Within the range of 7.0 to 10.0 at all times	

(b) Solvent Extraction Raffinate NSPS

Pollutant or Pollutant Property	Maximum for Any One Day	Maximum for Monthly Average
Metric Units - mg/kg of concentrate digested English Units - lbs/million lbs of concentrate digested		
Lead	2.564	1.190
Zinc	9.338	3.845
Ammonia (as N)	1,221.000	536.500
Fluoride	320.400	183.100
TSS	137.300	109.900
pH	Within the range of 7.0 to 10.0 at all times	

(c) Solvent Extraction Wet Air Pollution Control NSPS

Pollutant or Pollutant Property	Maximum for Any One Day	Maximum for Monthly Average
Metric Units - mg/kg of concentrate digested English Units - lbs/million lbs of concentrate digested		
Lead	0.069	0.032
Zinc	0.251	0.103
Ammonia (as N)	32.790	14.420
Fluoride	8.610	4.920
TSS	3.690	2.952
pH	Within the range of 7.0 to 10.0 at all times	

(d) Precipitation and Filtration NSPS

Pollutant or Pollutant Property	Maximum for Any One Day	Maximum for Monthly Average
Metric Units - mg/kg of concentrate digested English Units - lbs/million lbs of concentrate digested		
Lead	3.833	1.780
Zinc	13.960	5.750
Ammonia (as N)	1,825.000	802.200
Fluoride	479.100	273.800
TSS	205.400	164.300
pH	Within the range of 7.0 to 10.0 at all times	

(e) Precipitation and Filtration Wet Air Pollution Control NSPS

Pollutant or Pollutant Property	Maximum for Any One Day	Maximum for Monthly Average
Metric Units - mg/kg of concentrate digested English Units - lbs/million lbs of concentrate digested		
Lead	1.778	0.826
Zinc	6.478	2.668
Ammonia (as N)	846.600	372.200
Fluoride	222.300	127.000
TSS	95.270	76.210
pH	Within the range of 7.0 to 10.0 at all times	

(f) Tantalum Salt Drying NSPS

Pollutant or Pollutant Property	Maximum for Any One Day	Maximum for Monthly Average
Metric Units - mg/kg of tantalum salt dried English Units - lbs/million lbs of tantalum salt dried		
Lead	16.950	7.871
Zinc	61.750	25.430
Ammonia (as N)	8,070.000	3,548.000
Fluoride	2,119.000	1,211.000
TSS	908.200	726.500
pH	Within the range of 7.0 to 10.0 at all times	

(g) Oxides Calcining Wet Air Pollution Control NSPS

Pollutant or Pollutant Property	Maximum for Any One Day	Maximum for Monthly Average
Metric Units - mg/kg of columbium-tantalum oxide dried English Units - lbs/million lbs of columbium-tantalum oxide dried		
Lead	1.076	0.500
Zinc	3.919	1.614
Ammonia (as N)	512.200	225.200
Fluoride	134.500	76.840
TSS	57.630	46.110
pH	Within the range of 7.0 to 10.0 at all times	

(h) Reduction of Tantalum Salt to Metal NSPS

Pollutant or Pollutant Property	Maximum for Any One Day	Maximum for Monthly Average
Metric Units - mg/kg of tantalum salt reduced English Units - lbs/million lbs of tantalum salt reduced		
Lead	46.500	21.590
Zinc	169.400	69.750
Ammonia (as N)	22,140.000	9,732.000
Fluoride	5,813.000	3,322.000
TSS	2,491.000	1,993.000
pH	Within the range of 7.0 to 10.0 at all times	

(i) Reduction of Tantalum Salt to Metal Wet Air Pollution Control NSPS

Pollutant or Pollutant Property	Maximum for Any One Day	Maximum for Monthly Average
Metric Units - mg/kg of tantalum salt reduced English Units - lbs/million lbs of tantalum salt reduced		
Lead	0.572	0.266
Zinc	2.084	0.858
Ammonia (as N)	272.400	119.700
Fluoride	71.510	40.860
TSS	30.650	24.520
pH	Within the range of 7.0 to 10.0 at all times	

(j) Tantalum Powder Wash NSPS

Pollutant or Pollutant Property	Maximum for Any One Day	Maximum for Monthly Average
Metric Units - mg/kg of tantalum powder washed English Units - lbs/million lbs of tantalum powder washed		
Lead	5.721	2.656
Zinc	20.840	8.582
Ammonia (as N)	2,724.000	1,198.000
Fluoride	715.200	408.700
TSS	306.500	245.220
pH	Within the range of 7.0 to 10.0 at all times	

(k) Consolidation and Casting Contact Cooling NSPS

Pollutant or Pollutant Property	Maximum for Any One Day	Maximum for Monthly Average
Metric Units - mg/kg of columbium or tantalum cast or consolidate English Units - lbs/million lbs of columbium or tantalum cast or consolidated		
Lead	0.000	0.000
Zinc	0.000	0.000
Ammonia (as N)	0.000	0.000
Fluoride	0.000	0.000
TSS	0.000	0.000
pH	Within the range of 7.0 to 10.0 at all times	

PSES are promulgated based on the effluent concentrations achievable by the application of chemical precipitation, sedimentation, and multimedia filtration (lime, settle, and filter) technology and in-process flow reduction control methods, along with preliminary treatment consisting of ammonia steam stripping for selected waste streams. The following effluent standards are promulgated:

(a) Concentrate Digestion Wet Air Pollution Control PSES

Pollutant or Pollutant Property	Maximum for Any One Day	Maximum for Monthly Average
Metric Units - mg/kg of concentrate digested English Units - lbs/million lbs of concentrate digested		
Lead	0.174	0.081
Zinc	0.635	0.261
Ammonia (as N)	82.910	36.450
Fluoride	21.770	12.440

(b) Solvent Extraction Raffinate PSES PSES

Pollutant or Pollutant Property	Maximum for Any One Day	Maximum for Monthly Average
Metric Units - mg/kg of concentrate digested English Units - lbs/million lbs of concentrate digested		
Lead	2.564	1.190
Zinc	9.338	3.845
Ammonia (as N)	1,221.000	536.500
Fluoride	320.400	183.100

(c) Solvent Extraction Wet Air Pollution Control PSES

Pollutant or Pollutant Property	Maximum for Any One Day	Maximum for Monthly Average
Metric Units - mg/kg of concentrate digested English Units - lbs/million lbs of concentrate digested		
Lead	0.069	0.032
Zinc	0.251	0.103
Ammonia (as N)	32.790	14.420
Fluoride	8.610	4.920

(d) Precipitation and Filtration PSES

Pollutant or Pollutant Property	Maximum for Any One Day	Maximum for Monthly Average
Metric Units - mg/kg of concentrate digested English Units - lbs/million lbs of concentrate digested		
Lead	3.833	1.780
Zinc	13.960	5.750
Ammonia (as N)	1,825.000	802.200
Fluoride	479.100	273.800

(e) Precipitation and Filtration Wet Air Pollution Control PSES

Pollutant or Pollutant Property	Maximum for Any One Day	Maximum for Monthly Average
Metric Units - mg/kg of concentrate digested English Units - lbs/million lbs of concentrate digested		
Lead	1.778	0.826
Zinc	6.478	2.668
Ammonia (as N)	846.600	372.200
Fluoride	222.300	127.000

(f) Tantalum Salt Drying PSES PSES

Pollutant or Pollutant Property	Maximum for Any One Day	Maximum for Monthly Average
Metric Units - mg/kg of tantalum salt dried English Units - lbs/million lbs of tantalum salt dried		
Lead	16.950	7.871
Zinc	61.750	25.430
Ammonia (as N)	8,070.000	3,548.000
Fluoride	2,119.000	1,211.000

(g) Oxides Calcining Wet Air Pollution Control PSES

Pollutant or Pollutant Property	Maximum for Any One Day	Maximum for Monthly Average
Metric Units - mg/kg of columbium-tantalum oxide dried English Units - lbs/million lbs of columbium-tantalum oxide dried		
Lead	1.076	0.500
Zinc	3.919	1.614
Ammonia (as N)	512.200	225.200
Fluoride	134.500	76.840

(h) Reduction of Tantalum Salt to Metal PSES

Pollutant or Pollutant Property	Maximum for Any One Day	Maximum for Monthly Average
Metric Units - mg/kg of tantalum salt reduced English Units - lbs/million lbs of tantalum salt reduced		
Lead	46.500	21.590
Zinc	169.400	69.750
Ammonia (as N)	22,140.000	9,732.000
Fluoride	5,813.000	3,322.000

(i) Reduction of Tantalum Salt to Metal Wet Air Pollution Control PSES

Pollutant or Pollutant Property	Maximum for Any One Day	Maximum for Monthly Average
Metric Units - mg/kg of tantalum salt reduced English Units - lbs/million lbs of tantalum salt reduced		
Lead	0.572	0.266
Zinc	2.084	0.858
Ammonia (as N)	272.400	119.700
Fluoride	71.510	40.860

(j) Tantalum Powder Wash PSES

Pollutant or Pollutant Property	Maximum for Any One Day	Maximum for Monthly Average
Metric Units - mg/kg of tantalum powder washed English Units - lbs/million lbs of tantalum powder washed		
Lead	5.721	2.656
Zinc	20.840	8.582
Ammonia (as N)	2,724.000	1,198.000
Fluoride	715.200	408.700

(k) Consolidation and Casting Contact Cooling PSES

Pollutant or Pollutant Property	Maximum for Any One Day	Maximum for Monthly Average
Metric Units - mg/kg of columbium or tantalum cast or consolidated English Units - lbs/million lbs of columbium or tantalum cast or consolidated		
Lead	0.000	0.000
Zinc	0.000	0.000
Ammonia (as N)	0.000	0.000
Fluoride	0.000	0.000

PSNS are promulgated based on the effluent concentrations achievable by the application of chemical precipitation, sedimentation, and multimedia filtration (lime, settle, and filter) technology and in-process flow reduction control methods, along with preliminary treatment consisting of ammonia steam stripping for selected waste streams. The following effluent standards are promulgated for new sources:

(a) Concentrate Digestion Wet Air Pollution Control PSNS

Pollutant or Pollutant Property	Maximum for Any One Day	Maximum for Monthly Average
Metric Units - mg/kg of concentrate digested English Units - lbs/million lbs of concentrate digested		
Lead	0.174	0.081
Zinc	0.635	0.261
Ammonia (as N)	82.910	36.450
Fluoride	21.770	12.440

(b) Solvent Extraction Raffinate PSNS

Pollutant or Pollutant Property	Maximum for Any One Day	Maximum for Monthly Average
Metric Units - mg/kg of concentrate digested English Units - lbs/million lbs of concentrate digested		
Lead	2.564	1.190
Zinc	9.338	3.845
Ammonia (as N)	1,221.000	536.500
Fluoride	320.400	183.100

(c) Solvent Extraction Wet Air Pollution Control PSNS

Pollutant or Pollutant Property	Maximum for Any One Day	Maximum for Monthly Average
Metric Units - mg/kg of concentrate digested English Units - lbs/million lbs of concentrate digested		
Lead	0.069	0.032
Zinc	0.251	0.103
Ammonia (as N)	32.790	14.420
Fluoride	8.610	4.920

(d) Precipitation and Filtration PSNS

Pollutant or Pollutant Property	Maximum for Any One Day	Maximum for Monthly Average
Metric Units - mg/kg of concentrate digested English Units - lbs/million lbs of concentrate digested		
Lead	3.833	1.780
Zinc	13.960	5.750
Ammonia (as N)	1,825.000	802.200
Fluoride	479.100	273.800

(e) Precipitation and Filtration Wet Air Pollution Control PSNS

Pollutant or Pollutant Property	Maximum for Any One Day	Maximum for Monthly Average
Metric Units - mg/kg of concentrate digested English Units - lbs/million lbs of concentrate digested		
Lead	1.778	0.826
Zinc	6.478	2.668
Ammonia (as N)	846.600	372.200
Fluoride	222.300	127.000

(f) Tantalum Salt Drying PSNS

Pollutant or Pollutant Property	Maximum for Any One Day	Maximum for Monthly Average
Metric Units - mg/kg of tantalum salt dried English Units - lbs/million lbs of tantalum salt dried		
Lead	16.950	7.871
Zinc	61.750	25.430
Ammonia (as N)	8,070.000	3,548.000
Fluoride	2,119.000	1,211.000

(g) Oxides Calcining Wet Air Pollution Control PSNS

Pollutant or Pollutant Property	Maximum for Any One Day	Maximum for Monthly Average
Metric Units - mg/kg of columbium-tantalum oxide dried English Units - lbs/million lbs of columbium-tantalum oxide dried		
Lead	1.076	0.500
Zinc	3.919	1.614
Ammonia (as N)	512.200	225.200
Fluoride	134.500	76.840

(h) Reduction of Tantalum Salt to Metal PSNS

Pollutant or Pollutant Property	Maximum for Any One Day	Maximum for Monthly Average
Metric Units - mg/kg of tantalum salt reduced English Units - lbs/million lbs of tantalum salt reduced		
Lead	46.500	21.590
Zinc	169.400	69.750
Ammonia (as N)	22,140.000	9,732.000
Fluoride	5,813.000	3,322.000

(i) Reduction of Tantalum Salt to Metal Wet Air Pollution Control PSNS

Pollutant or Pollutant Property	Maximum for Any One Day	Maximum for Monthly Average
Metric Units - mg/kg of tantalum salt reduced English Units - lbs/million lbs of tantalum salt reduced		
Lead	0.572	0.266
Zinc	2.084	0.858
Ammonia (as N)	272.400	119.700
Fluoride	71.510	40.860

(j) Tantalum Powder Wash PSNS

Pollutant or Pollutant Property	Maximum for Any One Day	Maximum for Monthly Average
Metric Units - mg/kg of tantalum powder washed English Units - lbs/million lbs of tantalum powder washed		
Lead	5.721	2.656
Zinc	20.840	8.582
Ammonia (as N)	2,724.000	1,198.000
Fluoride	715.200	408.700

(k) Consolidation and Casting Contact Cooling PSNS

Pollutant or Pollutant Property	Maximum for Any One Day	Maximum for Monthly Average
Metric Units - mg/kg of columbium or tantalum cast or consolidated English Units - lbs/million lbs of columbium or tantalum cast or consolidated		
Lead	0.000	0.000
Zinc	0.000	0.000
Ammonia (as N)	0.000	0.000
Fluoride	0.000	0.000

THIS PAGE INTENTIONALLY LEFT BLANK

SECTION III

SUBCATEGORY PROFILE

This section of the primary columbium-tantalum supplement describes the raw materials and processes used in manufacturing primary columbium and tantalum salts and in subsequent production of the respective metals. It also presents a profile of the columbium and tantalum plants identified in this study. While chemists refer to periodic table element number 41 as niobium (Nb), in American metallurgy it is known as columbium, and this name will be used in this report.

DESCRIPTION OF PRIMARY COLUMBIUM AND TANTALUM PRODUCTION

The processes used at a columbium and tantalum production facility depend largely upon the raw material used and the plant's final product. Four basic operations from ore or slag to metal must be performed: physical and chemical breakup of the ore or slag to form columbium and tantalum salts (digestion); separation of the columbium and tantalum salts from each other and from the various impurities present; reduction of the salt to the respective metal; and fabrication of the metals into some consistent form, e.g., ingots, bars, or plates. Some plants perform the first two operations, and some the last two; some perform all four operations. A typical plant in the first category is shown in Figure III-1 (page 4359).

RAW MATERIALS

Ore concentrates and slags are the chief raw materials for the production of columbium and tantalum. Ore concentrates are derived principally from the minerals columbite, tantalite, pyrochlore, and ferroniobium, these minerals having a relatively high concentration of the desired metals. Columbium and tantalum ores are not currently mined in the United States, rather concentrates are imported from Canada, Brazil, and Australia. Columbium-tantalum ore concentrates contain approximately 50 to 60 percent columbium pentoxide (Nb_2O_5) or tantalum pentoxide (Ta_2O_5). Slags from foreign tin production have also been found to be a reliable source. There are several sources of tin slags, but the primary source is Thailand and Malaysia. These slags generally contain eight to 14 percent Nb_2O_5 and Ta_2O_5. Columbium and tantalum are usually found together, and are somewhat difficult to separate.

DIGESTION OF ORE OR SLAG

The ore or slag is first pulverized to approximately the consistency of talcum powder. Then, columbium and tantalum (along with some impurities) are leached from the powder by either hydrofluoric acid, sulfuric acid, or by chlorine gas.

Treatment of the ore or slag powder with chlorine gas at 500 to 1,000C evolves the volatile pentachlorides of columbium and tantalum, as well as the chlorides of various other substances. These are removed by selective condensation and the columbium and tantalum chlorides are separated by distillation. This process is completely anhydrous and generates no wastewater streams. The process has been used in the past, but is not now in use on a commercial scale due to the difficulty in separating the tantalum chloride and columbium chloride by distillation.

In the leaching process, aqueous hydrofluoric acid (sulfuric acid may also be used in conjunction with hydrofluoric acid) dissolves columbium, tantalum, and impurity metals from the powder, forming the fluoride salts of these metals. Unreacted concentrate or slag (gangue) is removed by settling and decantation and disposed of as a low level radioactive waste. Leaching is a more advantageous method for digesting the ore or slag because of the ease with which the columbium and tantalum fluorides can be separated by solvent extraction. Acid mist generated in the leaching process may be controlled by wet scrubbers. The scrubber liquor produced is a source of wastewater.

SEPARATION OF SALTS

Separation and purification of the columbium and tantalum fluorides is most economically achieved using solvent extraction. Methyl isobutyl ketone (MIBK) is the most commonly used solvent. Separation of columbium and tantalum by this method hinges on the different solubilities that the fluoride salts of the two metals exhibit in MIBK as a function of hydrofluoric acid normality in the feed. For instance, tantalum shows a great affinity for the organic (MIBK) phase at low normalities, while the normality must be substantially increased for columbium to show a similar affinity. Usually, a low normality feed stream is contacted with MIBK, whereupon tantalum salt of high purity is extracted. Additional hydrofluoric acid is then added to increase the normality of the aqueous phase, (the columbium-laden stream) which is then contacted with fresh MIBK, extracting the columbium salt.

The raffinate from this step is a source of wastewater. The columbium and tantalum are next extracted from MIBK by deionized water. Following extraction, the MIBK raffinate stream is recycled. Wet air pollution control used to control solvent extraction air fumes is a source of wastewater.

Columbium and tantalum salts are precipitated from the deionized water, usually by the addition of ammonia (to precipitate columbium) and potassium fluoride (to precipitate an intermediate tantalum salt). Ammonia is also used to precipitate high purity tantalum oxides. Fluoride fumes generated during precipitation may be controlled by a wet scrubber. The crystal precipitates are filtered from the aqueous mother liquor, which is then discarded. The crystals are then washed with water and dried. Columbium oxide precipitates are calcined in a kiln using wet

scrubbers to control gaseous fumes. A pure columbium pentoxide is achieved when calcined at 850°C in an oxidizing atmosphere. Tantalum salts are also dried, but wet scrubbers are not normally used; however, the water vapor may be condensed, captured, and discharged.

REDUCTION OF SALT TO METAL

A number of methods exist for the reduction of columbium and tantalum salts to metal. They include sodium reduction, aluminothermic reduction, carbon reduction, and electrolysis.

Sodium reduction is a popular method for producing both columbium and tantalum from their salts. In this process, sodium reduces the columbium or tantalum to metal. Layers of the salt are alternated with layers of sodium in a reaction vessel, then capped with sodium chloride to prevent oxidation of the reduced metal. The reaction mixture is often ignited electrically, but once ignited, the exothermic reaction is self-sustaining. Wet scrubbers are often used to control the gaseous emissions from the reaction vessel. After cooling, the columbium or tantalum metal-containing material is crushed, and any iron picked up from the reaction vessel is removed magnetically. The remaining metal powder is further purified by leaching with water, followed by nitric or hydrochloric acid.

The aluminothermic reaction also may be used on both columbium and tantalum salts. This method also may be used on certain ferrocolumbium ores which do not require digestion and separation of columbium and tantalum salts. The salt (or ore) is mixed with aluminum powder. Potassium chlorate is added to provide additional reaction heat, and magnesium is added to properly ignite the mixture. Columbium and tantalum are reduced to metal while aluminum is oxidized.

Carbon reduction takes place through a two-step route known as the Balke process and can be used on both columbium and tantalum salts. Its predominant use, however, is the reduction of the metal oxides. The metal oxide is first mixed with fine carbon and heated under vacuum to 1,800C, where a metal carbide and carbon monoxide are formed. The carbide is then mixed with more oxide and reacts to form the pure metal and more carbon monoxide. No known wastewater is generated during this process.

Electrolytic reduction of tantalum is sometimes practiced using fused salt techniques. Potassium fluotantalate (K_2TaF_7), the crystal which was precipitated by potassium fluoride in the separation of salts step, is electrolyzed to yield the pure tantalum metal, which is then separated from the cathode by pulverizing both metal and cathode acid, leaching out the cathode material (usually carbon).

CONSOLIDATION AND CASTING

Both columbium and tantalum show a tendency to lose their

metallic characteristics, particularly malleability and ductility, when even small amounts of impurities are present in the metal matrix. Therefore, special techniques must be used to further purify the metals and work them into their desired form. Some of the more popular processes include electron beam melting, cold-crucible arc melting, and simultaneous compacting and resistance heating.

Electron beam melting is currently the most common method of consolidation. A beam of high voltage, low current electrons is focused onto the crude metal and the top of a retractable ingot contained in a water-cooled copper cylinder. The beam melts the crude metal, and the falling molten globules form a pool on top of the ingot. The process is continuous, with the ingot being lowered as the molten metal solidifies. Most impurities boil out of the pool into the high vacuum environment required by the electron beam and are removed.

Arc melting occurs in much the same way as electron beam melting, except that a low voltage, high current arc of electricity melts the crude metal.

Simultaneous compaction and direct resistance heating is the oldest process used and is somewhat undesirable, as the metal must be processed two or three times to reach sufficient purity. The metal is typically compacted at about 6,900 atmospheres and heated to 1,400 to 1,500^{o}C for several hours. It is then rolled and sintered at 2,300^{o}C. Several rolling and sintering steps may be required.

PROCESS WASTEWATER SOURCES

In summary, the major uses of water in primary columbium and tantalum processing are:

1. Concentrate digestion wet air pollution control,
2. Solvent extraction,
3. Solvent extraction wet air pollution control,
4. Precipitation and filtration of metal salt,
5. Precipitation and filtration wet air pollution control,
6. Tantalum salt drying
7. Oxides calcining wet air pollution control,
8. Reduction of tantalum salt to metal,
9. Reduction of tantalum salt to metal wet air pollution control,
10. Tantalum powder wash and wet air pollution control, and
11. Consolidation and casting contact cooling.

OTHER WASTEWATER SOURCES

There may be other wastewater streams associated with the production of primary columbium-tantalum. The principal wastewater stream is maintenance and cleanup water. This stream is not considered as part of this rulemaking. EPA believes that

the flows and pollutant loadings associated with this wastewater stream are insignificant relative to the wastewaters selected and it is best handled by the appropriate permit authority on a case-by-case basis under the authority of Section 402 of the Clean Water Act.

AGE, PRODUCTION, AND PROCESS PROFILE

All five of the columbium-tantalum plants identified in this study were built in the 20-year period just after World War II (Table III-1, page 4356). Average plant production is approximately 450 tons per year, as shown in Table III-2 (page 4357).

Figure III-2 (page 4360) depicts the geographic locations of the plants comprising the columbium-tantalum subcategory of the nonferrous category. The plants are scattered, with half the plants located in the New England area and the rest in the Midwest or the West.

Table III-3 (page 4358) lists the major production processes presently used in the columbium-tantalum subcategory. Also shown is the number of plants discharging from these processes.

Table III-1

INITIAL OPERATING YEAR SUMMARY OF
PLANTS IN THE COLUMBIUM-TANTALUM SUBCATEGORY
BY DISCHARGE TYPE

Type of Plant Discharge	Initial Operating Year (Plant Age in Years) 1983-1969 0-15	1968-1959 15-25	1958-1949 25-35	Before 1949 35+	Total
Direct	0	1	2	0	3
Indirect	0	1	1	0	2
Total	0	2	3	0	5

TABLE III-2

PRODUCTION RANGES FOR THE
COLUMBIUM - TANTALUM SUBCATEGORY

Production Ranges for 1976 (tons/yr)	Number of Plants
Less than 450	3
More than 450	2
TOTAL	5

TABLE III-3

PRODUCTION PROCESSES UTILIZED BY THE COLUMBIUM - TANTALUM SUBCATEGORY

Process	Number of Plants with Process	Number of Plants Generating Wastewater
Digestion	3	-
-Air pollution Control	3	3
Extraction	3	-
Solvent Extraction Raffinate	3	3
Air Pollution Control	2	2
Precipitation and Filtration	3	-
Precipitation and Filtration wastewater	3	3
Air Pollution Control	2	2
Salt Drying	2	2
Oxide Calcining	4	-
Air Pollution Control	4	4
Reduction of Tantalum Salt	4	-
Reduction Wastewater	3	3
Air Pollution Control	2	2
Tantalum Powder Wash	1	1
Consolidation and Casting	4	-
Contact Cooling Water	1	1

Through reuse or evaporation practices, a plant may "generate" a wastewater from a particular process but not discharge it.

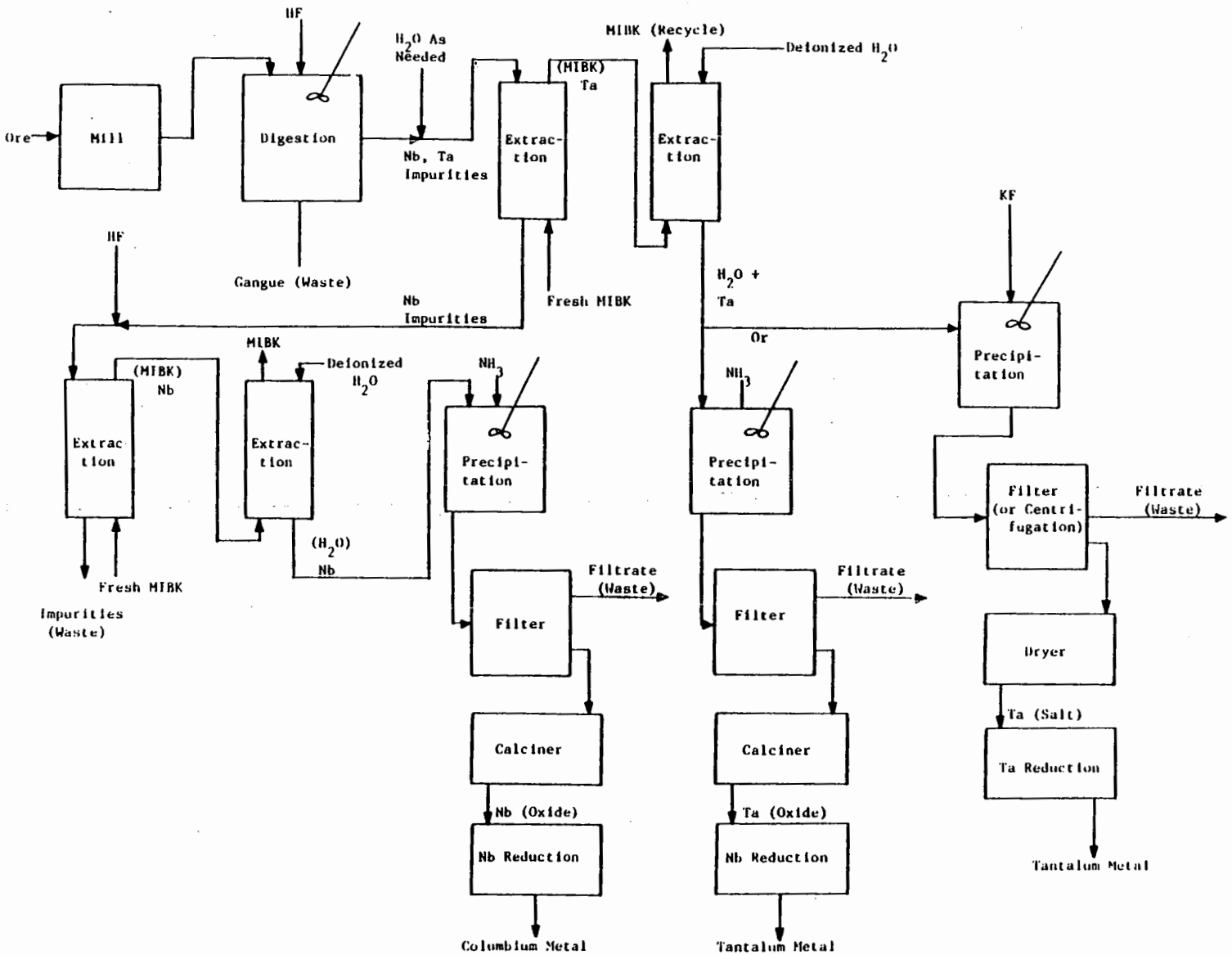

Figure III-1

PRIMARY COLUMBIUM-TANTALUM PRODUCTION PROCESS

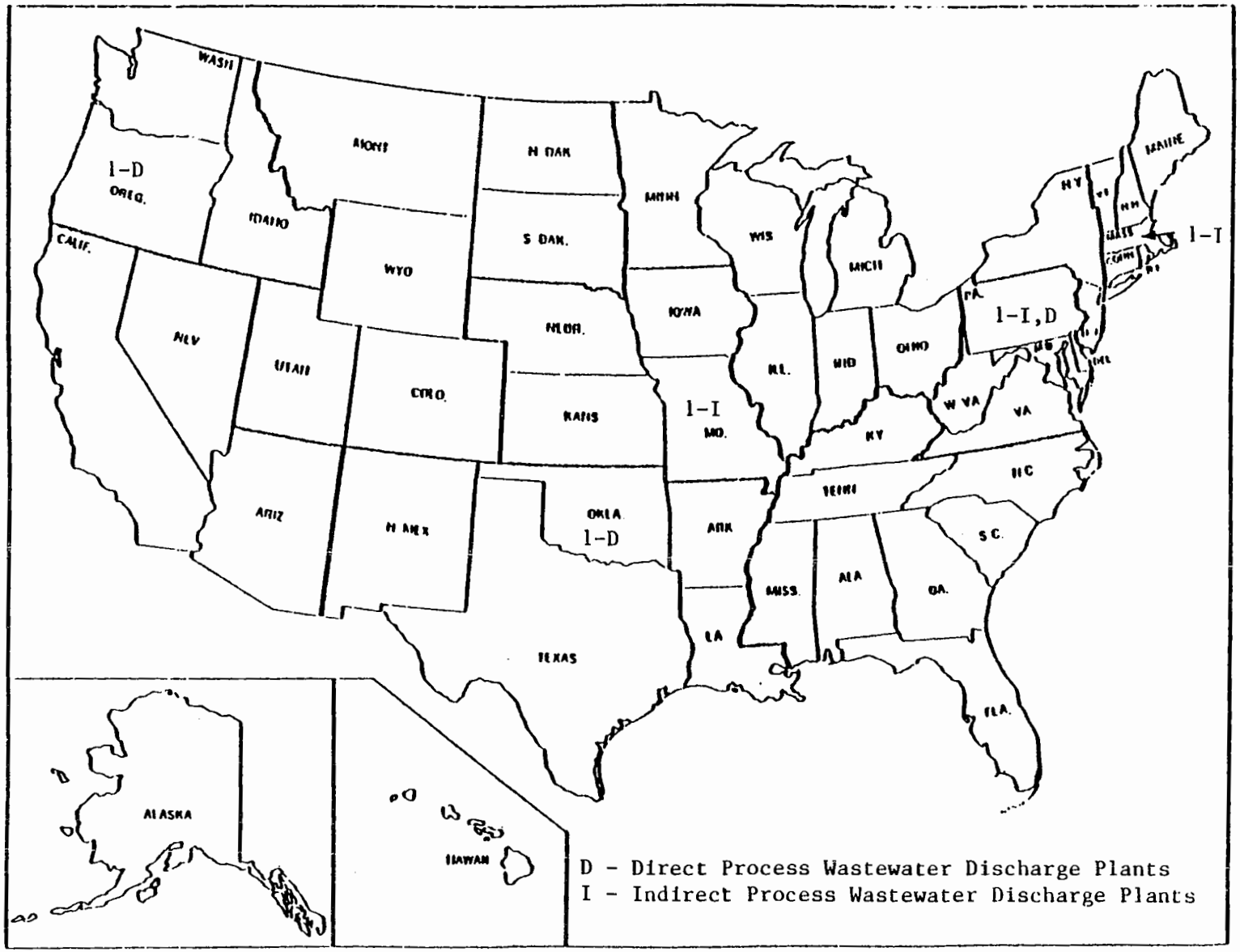

Figure III-2

GEOGRAPHIC LOCATIONS OF THE COLUMBIUM AND TANTALUM METAL PRODUCTION PLANTS

THIS PAGE INTENTIONALLY LEFT BLANK

SECTION IV

SUBCATEGORIZATION

This section summarizes the factors considered during the designation of the subdivisions of the primary columbium-tantalum subcategory.

FACTORS CONSIDERED IN SUBDIVIDING THE PRIMARY COLUMBIUM-TANTALUM SUBCATEGORY

The factors listed for general subcategorization were each evaluated when establishing the primary columbium-tantalum subcategory and its subdivisions. In the discussion that follows, the factors will be described as they pertain to this particular subcategory.

The rationale for considering subdivision of the primary columbium-tantalum subcategory is based primarily on the production process used. Within this subcategory, a number of different operations are performed, which may or may not have a water use or discharge, and which may require the establishment of separate effluent limitations and standards. While primary columbium-tantalum is still considered a single subcategory, a more thorough examination of the production processes, water use and discharge practices, and pollutant generation rates has illustrated the need for limitations and standards based on a specific set of waste streams. Limitations and standards will be based on specific flow allowances for the following subdivisions:

1. Concentrate digestion wet air pollution control,
2. Solvent extraction raffinate,
3. Solvent extraction wet air pollution control,
4. Precipitation and filtration of metal salt,
5. Precipitation and filtration wet air pollution control,
6. Tantalum salt drying
7. Oxides calcining wet air pollution control,
8. Reduction of tantalum salt to metal,
9. Reduction of tantalum salt to metal wet air pollution control,
10. Tantalum powder wash and wet air pollution control, and
11. Consolidation and casting contact cooling.

These subdivisions follow directly from differences within the two distinct production stages of primary columbium and tantalum: production of salts from ore concentrates and slags, and the reduction of salts to produce the metals. Plants processing primary columbium and tantalum fall into three categories: plants which perform the ore-to-salt operation, plants which perform the salt-to-metal operation, and plants which perform both operations. A review of the sampling data shows that significantly different wastewater volumes and characteristics are produced by the two manufacturing processes. Therefore, 11

subdivisions of the primary columbium-tantalum subcategory are necessary.

OTHER FACTORS

The other factors considered in this evaluation were shown to be inappropriate bases for subcategorization. Air pollution control methods, treatment costs, nonwater quality aspects and total energy requirements are functions of the selected subcategorization factors--metal product, raw materials, and production processes. Therefore, they are not independent factors and will not affect the method of subcategorization. As discussed in Section IV of the General Development Document, certain other factors such as plant age, plant size, and the number of employees were also evaluated and were determined to be inappropriate for use as bases for subcategorization of this subcategory.

PRODUCTION NORMALIZING PARAMETERS

The effluent limitations and standards developed in this document establish mass limitations on the discharge of pollutants. To allow these regulations to be applied to plants with various production capacities, the mass of pollutant discharge must be related to a unit of production. This factor is known as the production normalizing parameter (PNP). In general, the amount of product or intermediate produced by a particular manufacturing process is used as the PNP. This is based on the principle that the amount of water generated is proportional to the amount of product made. The PNPs for the 11 primary columbium-tantalum subdivisions are shown below:

1. Concentrate digestion wet air pollution control	kkg of concentrate digested
2. Solvent extraction raffinate	kkg of concentrate digested
3. Solvent extraction wet air pollution control	kkg of concentrate digested
4. Precipitation and filtration of metal salt	kkg of concentrate digested
5. Precipitation and filtration wet air pollution control	kkg of concentrate digested
6. Tantalum salt drying	kkg of tantalum salt dried
7. Oxides calcining wet air	kkg of columbium or tantalum oxide calcined (dried)
8. Reduction of tantalum salt to metal	kkg of tantalum salt reduced

9. Reduction of tantalum salt to metal wet air pollution control	kkg of tantalum salt reduced
10. Tantalum powder wash and wet air pollution control	kkg of tantalum powder washed
11. Consolidation and casting contact cooling	kkg of columbium or tantalum consolidated or cast

Other production normalizing parameters were considered; however, they were rejected. In the proposed mass limitations for this subcategory, the production normalizing parameter for each subdivision was the quantity of product recovered. It has been demonstrated to the Agency, however, that choosing PNPs in this manner for the first five subdivisions is not appropriate. Ore concentrates and tin slags contain significantly different columbium-tantalum values, and thus require different amounts of processing chemicals to recover equivalent amounts of metals. Production normalized flow rates presented in Section V verify this concept. A much better correlation between flow and production results when the PNP is changed to the mass of raw material rather than the mass of product.

SECTION V

WATER USE AND WASTEWATER CHARACTERISTICS

This section describes the characteristics of wastewater associated with the primary columbium-tantalum subcategory. Data used to quantify wastewater flow and pollutant concentrations are presented, summarized, and discussed. The contribution of specific production processes to the overall wastewater discharge from primary columbium-tantalum plants is identified whenever possible.

The two principal data sources used in preparation of this document are data collection portfolios (dcp) and field sampling results. Data collection portfolios contain information regarding wastewater flows. A significant amount of data has also been collected from comments on the proposed mass limitations and specific data requests to verify comments.

In order to quantify the pollutant discharge from primary columbium-tantalum plants, a field sampling program was conducted. Wastewater samples were collected in two phases: screening and verification. The first phase, screen sampling, was to identify which toxic pollutants were present in the wastewaters from production of the various metals. Screening samples were analyzed for 125 of the 126 toxic pollutants and other pollutants deemed appropriate. Because the analytical standard for TCDD was judged to be too hazardous to be made generally available, samples were never analyzed for this pollutant. There is no reason to expect that TCDD would be present in columbium-tantalum wastewater. A total of 10 plants were selected for screen sampling in the nonferrous metals manufacturing category with one of those plants in the primary columbium-tantalum subcategory. In general, the samples were analyzed for three classes of pollutants: toxic organic pollutants, toxic metal pollutants, and criteria pollutants (which includes both conventional and nonconventional pollutants).

As described in Section IV of this supplement, the primary columbium-tantalum subcategory has been further subdivided into 11 subdivisions or building blocks, each representing a major source of wastewater in the subcategory. Differences in the wastewater characteristics associated with these subdivisions are to be expected. For this reason, wastewater streams corresponding to each subdivision are addressed separately in the discussions that follow.

WASTEWATER SOURCES, DISCHARGE RATES, AND CHARACTERISTICS

The wastewater data presented in this section were evaluated in light of production process information compiled during this study. As a result, it was possible to identify the principal

wastewater sources in the primary columbium-tantalum subcategory. They are:

1. Concentrate digestion wet air pollution control,
2. Solvent extraction raffinate,
3. Solvent extraction wet air pollution control,
4. Precipitation and filtration of metal salt,
5. Precipitation and filtration wet air pollution control,
6. Tantalum salt drying,
7. Oxides calcining wet air pollution control,
8. Reduction of tantalum salt to metal,
9. Reduction of tantalum salt to metal wet air pollution control,
10. Tantalum powder wash and wet air pollution control, and
11. Consolidation and casting contact cooling.

Data supplied by dcp responses were evaluated, and two flow-to-production ratios were calculated for each stream. The two ratios, water use and wastewater discharge flow, are differentiated by the flow value used in calculation. Water use is defined as the volume of water or other fluid (e.g., solvent extraction raffinate) required for a given process per mass of product and is therefore based on the sum of recycle and make-up flows to a given process. Wastewater flow discharged after pretreatment or recycle (if these are present) is used in calculating the production normalized flow -- the volume of wastewater discharged from a given process to further treatment, disposal, or discharge per mass of columbium or tantalum produced. Differences between the water use and wastewater flows associated with a given stream result from recycle, evaporation, and carry-over on the product. The production values used in calculation correspond to the production normalizing parameter, PNP, assigned to each stream, as outlined in Section IV. The production normalized flows were compiled and statistically analyzed by stream type. Where appropriate, an attempt was made to identify factors that could account for variations in water use. This information is summarized in this section. A similar analysis of factors affecting the wastewater values is presented in Sections X, XI, and XII where representative BAT, BDT, and pretreatment discharge flows are selected for use in calculating the effluent limitations and standards. As an example, reduction of tantalum salt to metal air scrubbing flow is related to the reduction production. As such, the discharge rate is expressed in liters of scrubber wastewater per metric ton of metal reduced.

In order to quantify the concentrations of pollutants present in wastewater from primary columbium-tantalum plants, wastewater samples were collected at four of the five primary columbium-tantalum plants. Diagrams indicating the sampling sites and contributing production processes are shown in Figures V-1 through V-4 (pages 4420 - 4423).

The raw wastewater sampling data for the primary columbium-tantalum subcategory are presented in Tables V-2, V-4, V-6, V-8, and V-12, (pages 4373, 4379, 4384, 4388, and 4394 respectively).

Treated wastewater sampling data are shown in Tables V-18 through V-20 (pages 4411, 4414 and 4417). Tables V-15 through V-17 (pages 4402, 4404, and 4407) show miscellaneous raw wastewater for plants A, B, and C. These data were not used for the wastewater characterizations discussed below because the wastewater is combined with nonprocess water or is generated by nonscope processes. Where no data are listed for a specific day of sampling, the wastewater samples for the stream were omitted. If the analysis did not detect a pollutant in a waste stream, the pollutant was omitted from the table.

The data tables include some wastewater samples measured at concentrations not considered quantifiable. The base neutral extractables, acid fraction extractables, and volatile organics are generally considered not quantifiable at concentrations at or below 0.010 mg/l. Below this concentration, the data is considered too susceptible to random error to be quantitatively accurate. However, these data are useful in that they indicate the presence of a particular pollutant. The pesticide fraction is considered nonquantifiable at concentrations equal to or less than 0.005 mg/l. Nonquantifiable results are designated in the tables with an asterisk (double asterisk for less than or equal to 0.005 mg/l).

These detection limits shown on the data tables are not the same in all cases as the published detection limits for these pollutants by the same analytical methods. The detection limits used were reported with the analytical data and hence are the appropriate limits to apply to the data. Detection limit variation can occur as a result of a number of laboratory-specific, equipment-specific, and daily operator-specific factors. These factors can include day-to-day differences in machine calibration, variation in stock solutions, and variation in operators.

The statistical analysis of data includes some samples measured at concentrations considered not quantifiable. Data reported as an asterisk are considered as detected but below quantifiable concentrations, and a value of zero is used for averaging. Toxic organic, nonconventional, and conventional pollutant data reported with a "less than" sign are considered as detected, but not further quantifiable. A value of zero is also used for averaging. If a pollutant is reported as not detected, it is excluded in calculating the average. Finally, toxic metal values reported as less than a certain value were considered as not detected, and a zero was used in the calculation of the average. For example, three samples reported as ND, *, and 0.021 mg/l have an average value of 0.010 mg/l.

The method by which each sample was collected is indicated by number, as follows.

1 one-time grab
2 24-hour manual composite
3 24-hour automatic composite

4 48-hour manual composite
5 48-hour automatic composite
6 72-hour manual composite
7 72-hour automatic composite

In the data collection portfolios, all of the columbium-tantalum plants indicated that the toxic organic pollutants were known or believed to be absent from their wastewater. The majority of the metals were believed to be absent as summarized below:

	Known Present	Believed Present	Believed Absent	Known Absent
Antimony	1	-	2	1
Arsenic	1	-	2	1
Beryllium	-	-	3	1
Cadmium	-	-	2	2
Chromium	1	1	1	1
Copper	-	1	2	1
Lead	-	-	2	2
Mercury	-	1	1	2
Nickel	1	1	1	1
Selenium	-	-	4	1
Silver	-	-	2	2
Zinc	-	-	3	1

CONCENTRATE DIGESTION WET AIR POLLUTION CONTROL

The first step in the production of primary columbium and tantalum is the digestion of ore concentrates and slags with hydrofluoric acid. The process solubilizes columbium and tantalum, along with various other metals which require removal. Three of the five columbium-tantalum plants use wet scrubbers on their concentrate digestion process. Water use and discharge rates are shown in liters per metric ton of columbium-tantalum concentrate digested in Table V-1 (page 4372).

Table V-2 (page 4373) summarizes the raw wastewater sampling data for the toxic and selected conventional and nonconventional pollutants. The wet scrubber liquor is strongly acidic (pH of approximately 2.0), containing suspended solids, fluorides, and some metals at treatable concentrations (see Table V-2). Insoluble gangue impurities are removed by filtration. On-site disposal of gangue impurities is required because it is radioactive. The waste gangue slurry is typically contained in a holding pond, the overflow from which is acidic and contains quantifiable concentrations of metals, fluorides, and suspended solids.

SOLVENT EXTRACTION RAFFINATE

The digested solution containing columbium and tantalum is contacted with an organic solvent such as methyl isobutyl ketone (MIBK) in a two step multistage extraction process, resulting in

the extraction and separation of columbium and tantalum. Three plants discharge this wastewater as shown in Table V-3 (page 4378). The impurities from digestion remaining in the raffinate typically include treatable concentrations of organics, fluorides, metals, suspended solids, and oil and grease. The sampling data from an extraction raffinate waste stream are presented in Table V-4 (page 4379).

SOLVENT EXTRACTION WET AIR POLLUTION CONTROL

After extraction, the organic streams bearing columbium and tantalum are often contacted with deionized water to strip the columbium and tantalum from the organic phase. The organic solvent is then recycled to the first extraction process. Two plants use wet scrubbers to control air emissions from extraction operations. One of these plants uses the same scrubber for air pollution control of concentrate digestion and solvent extraction. The water use and discharge rates for the two plants are presented in Table V-5 (page 4383) in liters per metric ton of columbium-tantalum concentrate digested. This wastewater is acidic and contains concentrations of toxic organics and metals, fluorides, and suspended solids as shown in Table V-6 (page 4384).

PRECIPITATION AND FILTRATION OF METAL SALT

Precipitation of pure metal salts from the aqueous phase may be accomplished by ammonia addition to form columbium and tantalum oxides. All three plants reporting this waste stream discharge it as shown in Table V-7 (page 4387). The filtrate wastewater typically contains treatable concentrations of ammonia, fluoride, metals, and suspended solids. Ammonia stripping is frequently practiced to recover ammonia from the filtrate prior to discharge of the waste stream. Tantalum may also be recovered by treatment of the solubilized tantalum salt with hydrofluoric acid and potassium fluoride to precipitate potassium fluotantalate (K_2TaF_7). This precipitate also requires filtration and washing, leaving a filtrate effluent stream containing measurable concentrations of potassium, fluorides, and chlorides (see Table V-8) (page 4388).

PRECIPITATION AND FILTRATION WET AIR POLLUTION CONTROL

Gaseous fumes emitted during precipitation of columbium-tantalum are controlled with wet scrubbers at two plants. The scrubber liquor reflects the precipitation supernatant and contains fluoride and ammonia. One of the plants pretreats the scrubber liquor with ammonia steam stripping prior to central treatment. The water use and discharge rates for this scrubbing operation are presented in Table V-9 (page 4391).

TANTALUM SALT DRYING

Following filtration, potassium fluotantalate precipitates are usually dried to yield purified salts. Two of the five

columbium-tantalum plants capture steam in drying operations. Water discharge rates are shown in Table V-10 (page 4392). Wastewater associated with this process reflects the precipitation process used. For example, treatable concentrations of fluoride may be present when potassium fluoride is used as the reagent for precipitation. Table V-12 (page 4394) shows data from combined wastewater from the tantalum salt drying, reduction of salt to metal, and reduction of salt to metal scrubber waste streams.

OXIDES CALCINING WET AIR POLLUTION CONTROL

Columbium-tantalum oxides are precipitated from solution using ammonia and then dried and calcined in a kiln. Four plants reported using wet scrubbers to control emissions from this process as shown in Table V-11 (page 4393). Scrubber liquor blowdown will contain a large quantity of ammonia and is steam stripped at two plants.

REDUCTION OF TANTALUM SALT TO METAL WASTEWATER

Reduction processes vary somewhat in the columbium-tantalum subcategory. Of the several reduction techniques discussed in Section III, only two were reported in practice by plants in the columbium-tantalum subcategory. The first of these, sodium reduction, appears to be the dominant technique. The process requires extensive washing of the product metal with water or a combination of water and acid. The production normalized discharge rates are shown in Table V-13 (page 4400). This waste stream typically contains treatable concentrations of fluoride (see Table V-12, page 4394), as well as toxic metals, chloride, and oil and grease. The other reduction process used, aluminothermic reduction, is reported to generate no wastewater. The waste streams are some times passed through a cyclone to recover valuable columbium and tantalum solids. In addition, water is used for sizing at one of the plants surveyed. However, this wastewater stream is combined with washing operations and is not further considered as a separate wastewater stream.

REDUCTION OF TANTALUM SALT TO METAL WET AIR POLLUTION CONTROL

Reduction process emissions are frequently controlled with wet scrubbers. The resulting discharge is similar to the reduction washing streams. This waste stream may also be passed through a cyclone to recover columbium and tantalum solids, if present. Water use and discharge rates are presented in Table V-14 (page 4401) in liters per metric ton of tantalum metal reduced. Sampling data for this waste stream are contained in Table V-12 (page 4394). This waste water contains many of the same pollutants found in reduction of salt to metal wastewater.

TANTALUM POWDER WASH AND SCRUBBER

Following reduction, tantalum powder may be acid washed to impart

certain surface characteristics. This waste stream should contain very little toxic metals or fluoride. However, it will be characterized by a low pH. This waste stream should not be confused with the reduction of salt to metal wastewater. Although an acid medium may be used and achieve similar surface characteristics, reduction of salt to metal wastewater is generated primarily to leach away potassium fluoride, sodium fluoride, and sodium chloride salts. Therefore, tantalum powder wash is only applicable to those plants that carry out a separate wash step from reduction of salt to metal. The only plant with this stream reported a once through water usage of 20,433 l/kkg of tantalum powder washed.

CONSOLIDATION AND CASTING CONTACT COOLING

Only one of the plants surveyed practiced direct contact cooling of metal castings. This plant recycles 100 percent of the water used for this operation, resulting in zero discharge. No sampling data were available for this waste stream.

TABLE V-1

WATER USE AND DISCHARGE RATES FOR
CONCENTRATE DIGESTION WET AIR POLLUTION CONTROL

(l/kkg of columbium-tantalum concentrate digested)

Plant Code	Percent Recycle	Production Normalized Water Use	Production Normalized Discharge Rate
507	0	6219	6129
509	0	100191	100191
519*	80	93800	13132

* Same scrubber used for solvent extraction wet air pollution control.

Table V-2

PRIMARY COLUMBIUM-TANTALUM SAMPLING DATA
CONCENTRATE DIGESTION SCRUBBER
RAW WASTEWATER

Pollutant	Stream Code	Sample Type†	Concentrations (mg/l, Except as Noted) Source	Day 1	Day 2	Day 3	Average
Toxic Pollutants(a)							
4. benzene	22	2		0.042	*	ND	0.021
	114	2	*	*	*	ND	*
6. carbon tetrachloride	22	2		ND	0.017	ND	0.017
	114	2	ND	0.074	*	ND	0.037
7. chlorobenzene	22	2		ND	ND	*	*
10. 1,2-dichloroethane	22	2		0.156	0.086	0.062	0.101
	114	2	ND	0.04	ND	*	0.02
14. 1,1,2-trichloroethane	22	2		ND	ND	ND	
	114	2	*	<0.032	ND	ND	<0.032
23. chloroform	22	2		0.156	0.135	0.017	0.103
	114	2	0.422	0.046	0.034	ND	0.040
30. 1,2-trans-dichloroethylene	22	2		ND	ND	ND	
	114	2	ND	ND	0.484	ND	0.484
38. ethylbenzene	22	2		0.057	*	*	0.019
	114	2	ND	ND	ND	ND	
44. methylene chloride	22	2		88.4	ND	ND	88.4
	114	2	ND	ND	ND	ND	

Table V-2 (Continued)

PRIMARY COLUMBIUM-TANTALUM SAMPLING DATA
CONCENTRATE DIGESTION SCRUBBER
RAW WASTEWATER

	Pollutant	Stream Code	Sample Type†	Concentrations (mg/l, Except as Noted) Source	Day 1	Day 2	Day 3	Average
48.	dichlorobromomethane	22	2		ND	ND	ND	
		114	2	0.025	0.038	ND	ND	0.038
51.	chlorodibromomethane	22	2		ND	ND	ND	
		114	2	*	<0.089	*	ND	
66.	bis(2-ethylhexyl) phthalate	22	7		0.48			0.48
68.	di-n-butyl phthalate	22	7		0.08			0.08
85.	tetrachloroethylene	22	2		0.157	ND	ND	0.157
		114	2	*	ND	ND	ND	
87.	trichloroethylene	22	2		0.235	*	ND	0.118
		114	2	ND	ND	ND	ND	
106.	PCB-1242	22	7		<0.015			<0.015
109.	PCB-1232	22	7		<0.015			<0.015
113.	toxaphene	22	7		**			**
114.	antimony	22	7		2.9			2.9
115.	arsenic	22	7		0.003			0.003

Table V-2 (Continued)

PRIMARY COLUMBIUM-TANTALUM SAMPLING DATA
CONCENTRATE DIGESTION SCRUBBER
RAW WASTEWATER

Pollutant	Stream Code	Sample Type†	Concentrations (mg/l, Except as Noted) Source	Day 1	Day 2	Day 3	Average
117. beryllium	22	7		0.18			0.18
118. cadmium	22	7		40			40
119. chromium	22	7		1			1
120. copper	22	7		300			300
121. cyanide	22	7		0.003	0.004	0.002	0.003
122. lead	22	7		900			900
123. mercury	22	7		0.063			0.063
124. nickel	22	7		5			5
125. selenium	22	7		<0.002			<0.002
127. thallium	22	7		<0.05			<0.05
128. zinc	22	7		1,000			1,000

Table V-2 (Continued)

PRIMARY COLUMBIUM-TANTALUM SAMPLING DATA
CONCENTRATE DIGESTION SCRUBBER
RAW WASTEWATER

Pollutant	Stream Code	Sample Type†	Concentrations (mg/l, Except as Noted) Source	Day 1	Day 2	Day 3	Average
Nonconventionals							
ammonia	22	6			87.7	18.5	53.1
chemical oxygen demand (COD)	22	7		2,030			2,030
fluoride	22	7		24,000	2,800		13,400
phenols (total; by 4-AAP method)	22	1		0.016	0.028	0.01	0.018
	114	2		0.01	0.024	0.011	0.015
total organic carbon (TOC)	22	7		236			236
Conventionals							
oil and grease	22	1		9	8	10	9
	114	1		5	8	4	5.7
total suspended solids (TSS)	22	6		823			823
pH (standard units)	22	1		3.1			
	114	1		2.4	1.9	2.0	

Table V-2 (Continued)

PRIMARY COLUMBIUM-TANTALUM SAMPLING DATA
CONCENTRATE DIGESTION SCRUBBER
RAW WASTEWATER

Pollutant	Stream Code	Sample Type†	Concentrations (mg/l, Except as Noted)				
			Source	Day 1	Day 2	Day 3	Average

(a) Samples taken from stream 114 were not analyzed for toxic metals.

(b) Reported together.

†Sample type: Note: These numbers also apply to subsequent sampling data tables in this section.

1 - one-time grab
2 - 24-hour manual composite
3 - 24-hour automatic composite
4 - 48-hour manual composite
5 - 48-hour automatic composite
6 - 72-hour manual composite
7 - 72-hour automatic composite

*Indicates less than or equal to 0.01 mg/l.
**Indicates less than or equal to 0.005 mg/l.

TABLE V-3

WATER USE AND DISCHARGE RATES FOR SOLVENT EXTRACTION RAFFINATE

(l/kkg of columbium-tantalum concentrate digested)

Plant Code	Percent Recycle	Production Normalized Water Use	Production Normalized Discharge Rate
507	0	10971	10971
509	0	7338	7338
519	0	9463	9463

Table V-4

PRIMARY COLUMBIUM-TANTALUM SAMPLING DATA
SOLVENT EXTRACTION RAFFINATE
RAW WASTEWATER

Pollutant	Stream Code	Sample Type†	Concentrations (mg/l, Except as Noted) Source	Day 1	Day 2	Day 3	Average
Toxic Pollutants(a)							
1. acenaphthene	25	1		ND	0.017	ND	0.017
4. benzene	25	2		<0.046	<0.049	<0.051	<0.049
	114	2	*	*	*	ND	*
6. carbon tetrachloride	25	2		ND	ND	ND	
	114	2	ND	0.074	*	ND	0.037
7. chlorobenzene	25	2		ND	1.001	0.034	0.522
	114	2	ND	ND	ND	ND	
8. 1,2,4-trichlorobenzene	25	1		ND	0.051	*	0.026
10. 1,2-dichloroethane	25	2		ND	0.135	ND	
	114	2	ND	0.04	ND	*	0.02
14. 1,1,2-trichloroethane	25	2		ND	ND	ND	
	114	2		<0.032	ND	ND	<0.032
15. 1,1,2,2-tetrachloroethane (b)	25	2		ND	ND	<20.39	<20.39
	114	2		ND	ND	ND	
23. chloroform	25	2		0.203	0.24	0.181	0.208
	114	2	0.422	0.046	0.034	ND	0.040

Table V-4 (Continued)

PRIMARY COLUMBIUM-TANTALUM SAMPLING DATA
SOLVENT EXTRACTION RAFFINATE
RAW WASTEWATER

	Pollutant	Stream Code	Sample Type†	Concentrations (mg/l, Except as Noted) Source	Day 1	Day 2	Day 3	Average
30.	1,2-trans-dichloroethylene	25	2		ND	ND	ND	
		114	2	ND	ND	0.484	ND	0.484
38.	ethylbenzene	25	2		ND	ND	0.04	0.04
		114	2	ND	ND	ND	ND	
48.	dichlorobromomethane	25	2		ND	ND	ND	
		114	2	0.025	0.038	ND	ND	
51.	chlorodibromomethane	25	2		ND	ND	7.08	7.08
		114	2	*	<0.089	*	ND	
54.	isophorone	25	1		ND	0.029	ND	0.029
56.	nitrobenzene	25	1		ND	0.1	ND	0.1
66.	bis(2-ethylhexyl) phthalate	25	1		0.036	0.02	*	0.019
68.	di-n-butyl phthalate	25	1		0.012	0.042	*	0.018
71.	dimethyl phthalate	25	1		ND	ND	0.012	0.012
85.	tetrachloroethylene	25	2		<0.245	ND	0.138	0.138
		114	2	*	ND	ND	ND	
87.	trichloroethylene	25	2		ND	<0.259	<0.27	<0.265
		114	2	*	ND	*	ND	*

Table V-4 (Continued)

PRIMARY COLUMBIUM-TANTALUM SAMPLING DATA
SOLVENT EXTRACTION RAFFINATE
RAW WASTEWATER

	Pollutant	Stream Code	Sample Type†	Concentrations (mg/l, Except as Noted) Source	Day 1	Day 2	Day 3	Average
107.	PCB-1254	25	1		**	**	**	**
109.	PCB-1248	25	1		**	**	**	**
113.	toxaphene	25	1		<0.02	<0.02	<0.02	<0.02
114.	antimony	25	1		20	4	30	18
115.	arsenic	25	1		45	10	25	26.7
117.	beryllium	25	1		<0.2	<0.2	<0.2	<0.2
118.	cadmium	25	1		<0.2	<0.2	<0.2	<0.2
119.	chromium	25	1		1,000	1,000	1,000	1,000
120.	copper	25	1		50	10	70	43.3
121.	cyanide	25	1		0.016	0.033	0.011	0.020
122.	lead	25	1		200	300	1,000	500
123.	mercury	25	1		0.01	0.0075	0.016	0.011
124.	nickel	25	1		<0.5	<0.5	<0.5	<0.5
125.	selenium	25	1		70	35	30	45

Table V-4 (Continued)

PRIMARY COLUMBIUM-TANTALUM SAMPLING DATA
SOLVENT EXTRACTION RAFFINATE
RAW WASTEWATER

Pollutant	Stream Code	Sample Type†	Concentrations (mg/l, Except as Noted) Source	Day 1	Day 2	Day 3	Average
127. thallium	25	1		1.14	1.18	0.83	1.05
128. zinc	25	1		500	400	400	433
Nonconventionals							
chemical oxygen demand (COD)	25	1		13,000	11,000	10,000	11,330
phenols (total; by 4-AAP method)	25	1		0.02	0.008	0.014	0.014
	114	2		0.01	0.024	0.011	0.015
Conventionals							
oil and grease	25	1		39	20	7	22
total suspended solids (TSS)	25	1		12,600	18,300	17,500	16,130
pH (standard units)	114	1		2.4	1.9	2.0	

(a) Samples from both streams were not analyzed for the acid fraction of toxic organic pollutants.

(b) Questionable analysis.

TABLE V-5

WATER USE AND DISCHARGE RATES FOR
SOLVENT EXTRACTION WET AIR POLLUTION CONTROL

(l/kkg of columbium-tantalum concentrate digested)

Plant Code	Percent Recycle	Production Normalized Water Use	Production Normalized Discharge Rate
507	0	2456	2456
519*	80	93800	13132

* Same scrubber used in concentrate digestion

Table V-6

PRIMARY COLUMBIUM-TANTALUM SAMPLING DATA
SOLVENT EXTRACTION SCRUBBER
RAW WASTEWATER

Pollutant	Stream Code	Sample Type†	Concentrations (mg/l, Except as Noted) Source	Day 1	Day 2	Day 3	Average
Toxic Pollutants							
4. benzene	22	2		0.042	*	ND	0.021
6. carbon tetrachloride	22	2		ND	0.017	ND	0.017
7. chlorobenzene	22	2		ND	ND	*	*
10. 1,2-dichloroethane	22	2		0.156	0.086	0.062	0.101
23. chloroform	22	2		0.156	0.135	0.017	0.103
38. ethylbenzene	22	2		0.057	*	*	0.019
44. methylene chloride	22	2		88.4	ND	ND	88.4
66. bis(2-ethylhexyl) phthalate	22	7		0.48			0.48
85. tetrachloroethylene	22	2		0.157	ND	ND	0.157
87. trichloroethylene	22	2		0.235	*	ND	0.118
106. PCB-1242	22	7		<0.015			<0.015
109. PCB-1232	22	7		<0.015			<0.015

Table V-6 (Continued)

PRIMARY COLUMBIUM-TANTALUM SAMPLING DATA
SOLVENT EXTRACTION SCRUBBER
RAW WASTEWATER

	Pollutant	Stream Code	Sample Type†	Concentrations (mg/l, Except as Noted) Source	Day 1	Day 2	Day 3	Average
113.	toxaphene	22	7		**			**
114.	antimony	22	7		2.9			2.9
115.	arsenic	22	7		0.003			0.003
117.	beryllium	22	7		0.18			0.18
118.	cadmium	22	7		40			40
119.	chromium	22	7		1			1
120.	copper	22	7		300			300
121.	cyanide	22	7		0.003	0.004	0.002	0.003
122.	lead	22	7		900			900
123.	mercury	22	7		0.063			0.063
124.	nickel	22	7		5			5
125.	selenium	22	7		<0.002			<0.002
127.	thallium	22	7		<0.05			<0.05
128.	zinc	22	7		1,000			1,000

Table V-6 (Continued)

PRIMARY COLUMBIUM-TANTALUM SAMPLING DATA
SOLVENT EXTRACTION SCRUBBER
RAW WASTEWATER

Pollutant	Stream Code	Sample Type†	Concentrations (mg/l, Except as Noted) Source	Day 1	Day 2	Day 3	Average
Nonconventionals							
ammonia	22	6			87.7	18.5	53.1
chemical oxygen demand (COD)	22	7		2,030			2,030
fluoride	22	7		24,000	28,000		13,400
phenols (total; by 4-AAP method)	22	1		0.016	0.028	0.01	0.018
total organic carbon (TOC)	22	7		236			236
Conventionals							
oil and grease	22	1		9	8	10	9
total suspended solid (TSS)	22	6		823			823
pH (standard units)	22	1		3.1			

TABLE V-7

WATER USE AND DISCHARGE RATES FOR
PRECIPITATION AND FILTRATION OF COLUMBIUM-TANTALUM SALT

(l/kkg of columbium-tantalum concentrate digested)

Plant Code	Percent Recycle	Production Normalized Water Use	Production Normalized Discharge Rate
507	0	18419	18419
509	0	9735	9735
519	0	12912	12912

Table V-8

PRIMARY COLUMBIUM-TANTALUM SAMPLING DATA
PRECIPITATION AND FILTRATION
RAW WASTEWATER

Pollutant	Stream Code	Sample Type†	Concentrations (mg/l, Except as Noted) Source	Day 1	Day 2	Day 3	Average
Toxic Pollutants(a)							
4. benzene	117	2	*	*	*		*
15. 1,1,2,2-tetrachloroethane	117	2	*	*	ND		ND
66. bis(2-ethylhexyl) phthalate	117	2	0.049	1.158			1.158
85. tetrachloroethylene	117	2	*	*	ND		*
87. trichloroethylene	117	2	*	*	<0.023		*
108. PCB-1221	117	2	**	**			**
112. PCB-1016	117	2	**	**			**
113. toxaphene	117	2	ND	**			**
114. antimony	117	2	<0.1	<0.1			<0.1
115. arsenic	117	2	<0.01	0.04			0.04
117. beryllium	117	2	<0.001	<0.1			<0.1
118. cadmium	117	2	<0.002	2			2
119. chromium	117	2	<0.005	<0.5			<0.5

Table V-8 (Continued)

PRIMARY COLUMBIUM-TANTALUM SAMPLING DATA
PRECIPITATION AND FILTRATION
RAW WASTEWATER

Pollutant	Stream Code	Sample Type†	Concentrations (mg/l, Except as Noted) Source	Day 1	Day 2	Day 3	Average
120. copper	117	2	<0.006	0.8			0.8
121. cyanide	117	1		0.005	0.009		0.007
122. lead	117	2	<0.02	<2			<2
123. mercury	117	2	0.0001	<0.0001			<0.0001
124. nickel	117	2	<0.005	<0.5			<0.5
125. selenium	117	2	<0.01	<0.01			<0.01
126. silver	117	2	<0.02	0.07			0.07
127. thallium	117	2	<0.1	<0.1			<0.1
128. zinc	117	2	<0.06	<6			<6
Nonconventionals							
ammonia	117	2	<0.1	1,450	34	4.2	496.1
chemical oxygen demand (COD)	117	2		22			22
fluoride	117	2	1.6	3,525			3,525
phenols (total; by 4-AAP method)	117	2		0.008	0.009	0.005	0.007
total organic carbon (TOC)	117	2		1			1

Table V-8 (Continued)

PRIMARY COLUMBIUM-TANTALUM SAMPLING DATA
PRECIPITATION AND FILTRATION
RAW WASTEWATER

Pollutant	Stream Code	Sample Type†	Concentrations (mg/l, Except as Noted)				
			Source	Day 1	Day 2	Day 3	Average
Conventionals							
oil and grease	117	1		12	6		9
total suspended solids (TSS)	117	2		27,890			27,890
pH (standard units)	117	1		10.5	9.5	10.2	

(a) Samples from stream 117 were not analyzed for the toxic organic acid fraction.

TABLE V-9

WATER USE AND DISCHARGE RATES FOR
PRECIPITATION AND FILTRATION WET AIR POLLUTION CONTROL

(l/kkg of columbium-tantalum concentrate digested)

Plant Code	Percent Recycle	Production Normalized Water Use	Production Normalized Discharge Rate
509	0	114116	114116
519	0	12910	12910

TABLE V-10

WATER USE AND DISCHARGE RATES FOR TANTALUM SALT DRYING

(l/kkg of tantalum salt dried)

Plant Code	Percent Recycle	Production Normalized Water Use	Production Normalized Discharge Rate
509	0	17493	17493
509*	0	60544	60544

* Water use represents tantalum salt drying and oxides calcining.

TABLE V-11

WATER USE AND DISCHARGE RATES FOR
OXIDES CALCINING WET AIR POLLUTION CONTROL

(l/kkg of columbium-tantalum oxide calcined)

Plant Code	Percent Recycle	Production Normalized Water Use	Production Normalized Discharge Rate
507	89	30366	30366
509	0	50966	50966
519	100	NR	NR
4225	0	33935	33935

Table V-12

PRIMARY COLUMBIUM-TANTALUM SAMPLING DATA
METAL SALT DRYING SCRUBBER, REDUCTION OF SALT TO METAL, AND REDUCTION OF SALT TO METAL SCRUBBER
RAW WASTEWATER

Pollutant	Stream Code	Sample Type†	Concentrations (mg/l, Except as Noted) Source	Day 1	Day 2	Day 3	Average
Toxic Pollutants(a,b)							
4. benzene	23	2		ND	ND	ND	
	113	2	*	*	*	*	*
10. 1,2-dichloroethane	23	2		0.039	0.016	ND	0.022
	113	2	ND	0.023	0.026	0.021	0.023
12. hexachloroethane	23	7		ND			
	113	7	ND	0.023			0.023
14. 1,1,2-trichloroethane	23	2		ND	ND	ND	
	113	2	*	<0.011	ND	ND	<0.011
15. 1,1,2,2-tetrachloroethane	23	2		<0.029	ND	ND	<0.029
	113	2	ND	ND	ND	ND	
23. chloroform	23	2		ND	0.018	0.012	0.015
	113	2	0.422	ND	0.032	0.089	0.061
30. 1,2-trans-dichloroethylene	23	2		0.015	ND	ND	0.015
	113	2	ND	ND	0.26	ND	0.26
35. 2,4-dinitrotoluene	23	7		ND			
	113	7	ND	<0.016			<0.016
36. 2,6-dinitrotoluene	23	7		ND			
	113	7	ND	<0.016			<0.016

Table V-12 (Continued)

PRIMARY COLUMBIUM-TANTALUM SAMPLING DATA
METAL SALT DRYING SCRUBBER, REDUCTION OF SALT TO METAL, AND REDUCTION OF SALT TO METAL SCRUBBER
RAW WASTEWATER

Pollutant	Stream Code	Sample Type†	Concentrations (mg/l, Except as Noted) Source	Day 1	Day 2	Day 3	Average
38. ethylbenzene	23	2		ND	*	ND	*
	113	2	ND	ND	ND	ND	
44. methylene chloride	23	2		ND	ND	ND	
	113	2	ND	ND	ND	ND	
47. bromoform	23	2		ND	0.134	ND	0.134
	113	2	ND	*	ND	0.021	0.011
51. chlorodibromomethane	23	2		ND	0.02	ND	0.02
	113	2	*	<0.031	ND	ND	<0.031
54. isophorone	113	7	ND	*			*
66. bis(2-ethylhexyl) phthalate	23	7		0.015			0.015
	113	7	0.049	0.06			0.06
67. butyl benzyl phthalate	23	7		*			*
	113	7		ND			
68. di-n-butyl phthalate	23	7		*			*
	113	7	0.011	*			*
70. diethyl phthalate	23	7		0.017			0.017
	113	7	ND	ND			ND
71. dimethyl phthalate	23	7		0.039			0.039
	113	7	ND	*			

Table V-12 (Continued)

PRIMARY COLUMBIUM-TANTALUM SAMPLING DATA
METAL SALT DRYING SCRUBBER, REDUCTION OF SALT TO METAL, AND REDUCTION OF SALT TO METAL SCRUBBER
RAW WASTEWATER

	Pollutant	Stream Code	Sample Type†	Concentrations (mg/l, Except as Noted) Source	Day 1	Day 2	Day 3	Average
81.	phenanthrene	23			ND			
		113	7	*	*			*
85.	tetrachloroethylene	23	2		<0.013	ND	ND	<0.013
87.	trichloroethylene	23	2		ND	*	ND	*
		113	2	*	*	*	*	*
108.	PCB-1221	113	7	**	0.0516			0.0516
112.	PCB-1016	113	7	**	0.0336			0.0336
114.	antimony	23	7		4.5			4.5
		113	7	<0.1	<0.1			<0.1
115.	arsenic	23	7		0.45			0.45
		113	7	<0.01	0.05			0.05
117.	beryllium	23	7		<0.02			<0.02
		113	7	<0.001	0.02			0.02
118.	cadmium	23	7		<0.2			<0.2
		113	7	<0.002	<0.02			<0.02
119.	chromium	23	7		<0.24			<0.24
		113	7	<0.005	1			1

Table V-12 (Continued)

PRIMARY COLUMBIUM-TANTALUM SAMPLING DATA
METAL SALT DRYING SCRUBBER, REDUCTION OF SALT TO METAL, AND REDUCTION OF SALT TO METAL SCRUBBER
RAW WASTEWATER

			Concentrations (mg/l, Except as Noted)				
Pollutant	Stream Code	Sample Type†	Source	Day 1	Day 2	Day 3	Average
120. copper	23	7		<1			<1
	113	7	0.066	0.2			0.2
121. cyanide	23	7		<0.001	0.004	0.003	0.0035
	113	7		0.004	0.002	0.018	0.008
122. lead	23	7		10			10
	113	7	<0.02	1			1
123. mercury	23	7		0.0028			0.0028
	113	7	0.0001	0.0018			0.0018
124. nickel	23	7		1			1
	113	7	<0.005	1			1
125. selenium	23	7		0.018			0.018
	113	7	<0.01	<0.01			<0.01
126. silver	23	7					
	113	7	<0.02	0.06			0.06
127. thallium	23	7		ND			ND
	113	7	<0.1	<0.1			<0.1
128. zinc	23	7		6			6
	113	7	<0.06	<0.6			<0.6

Table V-12 (Continued)

PRIMARY COLUMBIUM-TANTALUM SAMPLING DATA
METAL SALT DRYING SCRUBBER, REDUCTION OF SALT TO METAL, AND REDUCTION OF SALT TO METAL SCRUBBER
RAW WASTEWATER

Pollutant	Stream Code	Sample Type†	Concentrations (mg/l, Except as Noted) Source	Day 1	Day 2	Day 3	Average
Nonconventionals							
ammonia	23	2		25,700	18,500	16,900	20,377
chemical oxygen demand (COD)	23	7		21	16.5	27.8	21.7
	113	7		195			195
chloride	113	7	<5	1,110			1,110
fluoride	23	7		21,000			21,000
	113	7	1.6	3,000			3,000
phenols (total; by 4-AAP method)	23	2		0.028	0.023	0.01	0.02
	113	2		0.005	0.020	0.005	0.010
total organic carbon (TOC)	23	7		12			12
	113	7		51			51
Conventionals							
oil and grease	23	1		6	6	4	5.3
	113	1		5	2	5	4

Table V-12 (Continued)

PRIMARY COLUMBIUM-TANTALUM SAMPLING DATA
METAL SALT DRYING SCRUBBER, REDUCTION OF SALT TO METAL, AND REDUCTION OF SALT TO METAL SCRUBBER
RAW WASTEWATER

Pollutant	Stream Code	Sample Type†	Concentrations (mg/l, Except as Noted)				
			Source	Day 1	Day 2	Day 3	Average
total suspended solids (TSS)	23	7		181			181
	113	7		656			656
pH (standard units)	23	1		6.8			
	113	1		6.1	8.3	8.2	

(a) Stream 113 was not analyzed for the toxic organic acid extractables.

(b) Stream 23 was not analyzed for the toxic organic acid extractable or pesticide fractions.

TABLE V-13

WATER USE AND DISCHARGE RATES FOR
REDUCTION OF TANTALUM SALT TO METAL

(l/kkg of tantalum salt reduced)

Plant Code	Percent Recycle	Production Normalized Water Use	Production Normalized Discharge Rate
507	0	272542	272542
513	0	170696	170696
519	0	54975	54975

TABLE V-14

WATER USE AND DISCHARGE RATES FOR
REDUCTION OF TANTALUM SALT TO METAL WET AIR POLLUTION CONTROL

(l/kkg of tantalum metal reduced)

Plant Code	Percent Recycle	Production Normalized Water Use	Production Normalized Discharge Rate
513	0	37826	37826
519	0	2043	2043

Table V-15

PRIMARY COLUMBIUM-TANTALUM - SAMPLING DATA
MISCELLANEOUS - RAW WASTEWATER - PLANT A

Pollutant	Stream Code	Sample Type	Concentrations (mg/l, Except as Noted) Source	Day 1	Day 2	Day 3	Average
Toxic Pollutants(a)							
115. arsenic	50	2	<0.01	<0.01			<0.01
	51	2	<0.01	0.01			0.01
	52	2	<0.01	<0.01			<0.01
117. beryllium	50	2		<0.001			<0.001
	51	2		<0.01			<0.01
	52	2		0.004			0.004
118. cadmium	50	2		0.009			0.009
	51	2		<0.02			<0.02
	52	2		0.04			0.04
119. chromium	50	2		0.006			0.006
	51	2		0.15			0.15
	52	2		0.1			0.1
120. copper	50	2		1.0			1
	51	2		0.79			0.79
	52	2		0.2			0.2
122. lead	50	2		<0.02			<0.02
	51	2		0.22			0.22
	52	2		0.06			0.06
123. mercury	50	2		0.0001			0.0001
	51	2		0.004			0.004
	52	2		0.0001			0.0001

Table V-15 (Continued)

PRIMARY COLUMBIUM-TANTALUM - SAMPLING DATA
MISCELLANEOUS - RAW WASTEWATER - PLANT A

Pollutant	Stream Code	Sample Type	Concentrations (mg/l, Except as Noted) Source	Day 1	Day 2	Day 3	Average
Conventionals							
oil and grease	51	1		121			121
	52	1		6			6
total suspended solids (TSS)	50	2		<1			<1
	51	2		1,012			1,012
	52	2		52			52
pH (standard units)	50	1		5.45			
	51	1		11.0			
	52	1		2.1			

(a) No samples were analyzed for toxic organic pollutants, cyanide, or asbestos.

Table V-16

PRIMARY COLUMBIUM-TANTALUM SAMPLING DATA
MISCELLANEOUS - RAW WASTEWATER - PLANT B

Pollutant	Stream Code	Sample Type†	Concentrations (mg/l, Except as Noted) Source	Day 1	Day 2	Day 3	Average
Toxic Pollutants(a)							
1. acenaphthene	116	7	ND	*			*
4. benzene	116	2	*	*	*	*	*
8. 1,2,4-trichlorobenzene	116	2	ND	0.265			0.265
10. 1,2-dichloroethane	116	2	ND	ND	0.017	ND	0.017
23. chloroform	116	2	0.422	*	ND	*	*
30. 1,2-trans-dichloroethylene	116	2	ND	ND	0.094	0.017	0.056
35. 2,4-dinitrotoluene	116	7	ND	*			*
36. 2,6-dinitrotoluene	116	7	ND	*			*
56. nitrobenzene	116	7	ND	0.163			0.163
66. bis(2-ethylhexyl) phthalate	116	7	0.049	1.158			1.158
71. dimethyl phthalate	116	7	ND	*			*
81. phenanthrene	116	7	*	*			*
87. trichloroethylene	116	2	*	ND	ND	*	*
108. PCB-1221	116	7	**	**			**
112. PCB-1016	116	7	**	**			**

Table V-16 (Continued)

PRIMARY COLUMBIUM-TANTALUM SAMPLING DATA
MISCELLANEOUS - RAW WASTEWATER - PLANT B

Pollutant	Stream Code	Sample Type†	Concentrations (mg/l, Except as Noted) Source	Day 1	Day 2	Day 3	Average
113. toxaphene	116	7	ND	ND			
114. antimony	116	7	<0.1	<0.1			<0.1
115. arsenic	116	7	<0.01	0.57			0.57
117. beryllium	116	7	<0.001	0.5			0.5
118. cadmium	116	7	<0.002	0.2			0.2
119. chromium	116	7	<0.005	20			20
120. copper	116	7	<0.006	0.7			0.7
121. cyanide	116	7		0.002	0.002	0.002	0.002
122. lead	116	7	<0.02	10			10
123. mercury	116	7	0.0001	0.0003			0.0003
124. nickel	116	7	<0.005	10			10
125. selenium	116	7	<0.01	0.02			0.02
126. silver	116	7	<0.02	0.05			0.05
127. thallium	116	7	<0.1	<0.1			<0.1
128. zinc	116	7	<0.06	1			1

Table V-16 (Continued)

PRIMARY COLUMBIUM-TANTALUM SAMPLING DATA
MISCELLANEOUS - RAW WASTEWATER - PLANT B

Pollutant	Stream Code	Sample Type†	Concentrations (mg/l, Except as Noted)				
			Source	Day 1	Day 2	Day 3	Average
Nonconventionals							
chemical oxygen demand (COD)	116	2		497			497
total organic carbon (TOC)	116	2		119			119
Conventionals							
oil and grease	116	1		5	5	3	4.3
total suspended solids (TSS)	116	2		436			436
pH (standard units)	116	1		2.4	2.1	2.1	

Table V-17

PRIMARY COLUMBIUM-TANTALUM SAMPLING DATA
MISCELLANEOUS - RAW WASTEWATER - PLANT C

Pollutant	Stream Code	Sample Type†	Concentrations (mg/l, Except as Noted)				
			Source	Day 1	Day 2	Day 3	Average
Toxic Pollutants							
1. acenaphthene	96	7				0.015	0.015
4. benzene	96	1	ND	<0.04	*	ND	<0.02
6. carbon tetrachloride	96	1	ND	0.109	ND	0.035	0.072
7. chlorobenzene	96	1		ND	<0.029	0.065	0.033
8. 1,2,4-trichlorobenzene	96	7				0.018	0.018
10. 1,2-dichloroethane	96	1	ND	*	0.018	ND	0.009
14. 1,1,2-trichloroethane	96	1	ND	ND	ND	*	*
15. 1,1,2,2-tetrachloroethane	96	1	ND	<0.049	ND	ND	<0.049
23. chloroform	96	1	ND	0.059	0.018	*	0.026
29. 1,1-dichloroethylene	96	1	ND	0.136	*	ND	0.068
38. ethylbenzene	96	1	ND	ND	ND	0.049	0.049
48. dichlorobromomethane	96	1	ND	0.016	ND	ND	0.016
51. chlorodibromomethane	96	1	ND	ND	*	ND	*
66. bis(2-ethylhexyl) phthalate	96	7	*			0.018	0.018

Table V-17 (Continued)

PRIMARY COLUMBIUM-TANTALUM SAMPLING DATA
MISCELLANEOUS - RAW WASTEWATER - PLANT C

	Pollutant	Stream Code	Sample Type†	Concentrations (mg/l, Except as Noted) Source	Day 1	Day 2	Day 3	Average
68.	di-n-butyl phthalate	96	7	*			*	*
71.	dimethyl phthalate	96	7	*			0.02	0.02
81.	phenanthrene	96	7				<0.012	<0.012
85.	tetrachloroethylene	96	1	ND	<0.046	0.189	0.137	0.109
86.	toluene	96	1	ND	0.092	*	0.012	0.035
87.	trichloroethylene	96	1	ND	<0.185	ND	0.020	0.010
108.	PCB-1221	96	7				**	**
111.	PCB-1060	96	7				**	**
113.	toxaphene	96	7		ND			
114.	antimony	96	7				<0.01	<0.01
115.	arsenic	96	7				0.18	0.18
117.	beryllium	96	7				0.02	0.02
118.	cadmium	96	7	<0.002			0.008	0.008
119.	chromium	96	7				3	3

Table V-17 (Continued)

PRIMARY COLUMBIUM-TANTALUM SAMPLING DATA
MISCELLANEOUS - RAW WASTEWATER - PLANT C

Pollutant	Stream Code	Sample Type†	Concentrations (mg/l, Except as Noted) Source	Day 1	Day 2	Day 3	Average
120. copper	96	7				0.5	0.5
121. cyanide	96	7		0.001	0.002	0.003	0.002
122. lead	96	7				3	3
123. mercury	96	7				0.0017	0.0017
124. nickel	96	7				0.6	0.6
125. selenium	96	7				<0.01	<0.01
126. silver	96	7				<0.02	<0.02
127. thallium	96	7				<0.1	<0.1
128. zinc	96	7				6	6
Nonconventionals							
ammonia	96	1		452	3,210	2,180	1,947
chemical oxygen demand (COD)	96	7				145	145
chloride	96	7				118	118
fluoride	96	7				2,200	2,200
phenols (total; by 4-AAP method)	96	1		0.092	0.005	0.004	0.337
total organic carbon (TOC)	96	7				45	45

Table V-17 (Continued)

PRIMARY COLUMBIUM-TANTALUM SAMPLING DATA
MISCELLANEOUS - RAW WASTEWATER - PLANT C

Pollutant	Stream Code	Sample Type†	Concentrations (mg/l, Except as Noted)				
			Source	Day 1	Day 2	Day 3	Average
Conventionals							
oil and grease	96	1		10	6	6	7.3
total suspended solids (TSS)	96	1				566	566

Table V-18

PRIMARY COLUMBIUM-TANTALUM - SAMPLING DATA
MISCELLANEOUS - TREATMENT PLANT SAMPLES - PLANT A

Pollutant	Stream Code	Sample Type	Concentrations (mg/l, Except as Noted) Source	Day 1	Day 2	Day 3	Average
Toxic Pollutants							
4. benzene	48	3	*	*	*	ND	*
	49	3	*	0.047	*	ND	0.0235
6. carbon tetrachloride	48	3	ND	ND	ND	ND	
	49	3	ND	0.043	ND	ND	0.043
11. 1,1,1-trichloroethane	48	3	ND	ND	ND	ND	
	49	3	ND	0.013	0.046	ND	0.0295
23. chloroform	48	3	0.032	0.069	ND	0.027	0.048
	49	3	0.032	0.03	*	0.038	0.023
29. 1,1-dichloroethylene	48	3	ND	ND	ND	ND	
	49	3	ND	ND	0.025	ND	0.025
30. 1,2-transdichloro-ethylene	48	3	ND	ND	0.022	*	0.011
	49	3	ND	ND	*	ND	*
48. dichlorobromomethane	48	3	ND	ND	ND	ND	
	49	3	ND	0.089	ND	ND	0.089
66. bis(2-ethylhexyl) phthalate	48	3	0.173	0.404	0.221	0.198	0.274
	49	3	0.173	0.016	0.203	0.179	0.133
67. butyl benzyl phthalate	48	3	ND	ND	*	*	*
	49	3	ND	ND	0.047	0.043	0.045

Table V-18 (Continued)

PRIMARY COLUMBIUM-TANTALUM - SAMPLING DATA
MISCELLANEOUS - TREATMENT PLANT SAMPLES - PLANT A

	Pollutant	Stream Code	Sample Type	Concentrations (mg/l, Except as Noted) Source	Day 1	Day 2	Day 3	Average
114.	antimony	48	3	<0.1	<0.01	<0.1	<0.01	<0.04
		49	3	<0.1	0.4	<0.01	<0.1	0.4
115.	arsenic	48	3	<0.01	<0.01	<0.01	<0.01	<0.01
		49	3	<0.01	<0.01	<0.01	<0.01	<0.01
118.	cadmium	48	3	ND	0.01	0.004	0.008	0.007
		49	3	ND	<0.02		<0.02	<0.02
119.	chromium	48	3	ND	0.03	0.03	0.01	0.023
		49	3	ND	0.14		<0.05	0.14
120.	copper	48	3	ND	0.009	0.03	0.007	0.015
		49	3	ND	<0.06		<0.06	<0.06
121.	cyanide	48	3		<0.001	<0.001	<0.001	<0.001
		49	3		0.001	0.002	0.001	0.0013
122.	lead	48	3	ND	0.03	0.03	<0.02	0.03
		49	3	ND	0.36		<0.2	0.36
123.	mercury	48	3	ND	0.0001	0.0001	0.0001	0.0001
		49	3	ND	0.0001		0.0002	0.00015
124.	nickel	48	3	ND	0.04	0.05	0.007	0.032
		49	3	ND	<0.05		<0.05	<0.05

Table V-18 (Continued)

PRIMARY COLUMBIUM-TANTALUM - SAMPLING DATA
MISCELLANEOUS - TREATMENT PLANT SAMPLES - PLANT A

Pollutant	Stream Code	Sample Type	Concentrations (mg/l, Except as Noted) Source	Day 1	Day 2	Day 3	Average
126. silver	48	3	<0.02	<0.02	<0.02	<0.02	<0.02
	49	3	<0.02	0.05	<0.02	0.04	0.045
128. zinc	48	3	ND	<0.06	0.08	<0.06	0.08
	49	3	ND	<0.6		<0.6	<0.6
Conventionals							
oil and grease	48	1		6	6	6	6.00
	49	1		7	5	4	5.33

Table V-19

PRIMARY COLUMBIUM-TANTALUM - SAMPLING DATA
MISCELLANEOUS - TREATMENT PLANT SAMPLES - PLANT B

	Pollutant	Stream Code	Sample Type	Concentrations (mg/l, Except as Noted) Source	Day 1	Day 2	Day 3	Average
Toxic Pollutants								
8.	1,2,4-trichlorobenzene	112	7	ND	0.011			0.011
		115	7	ND	ND			
23.	chloroform	112	7	0.422	ND	0.022	0.02	0.02
		115	7	0.422	0.048	0.03	0.032	0.037
30.	1,2-trans-dichloro-ethylene	112	7	ND	ND			
		115	7	ND	ND	0.21	ND	0.21
51.	chlorodibromomethane	112	7	*	ND			
		115	7	*	ND	0.019	ND	0.019
55.	naphthalene	112	7	ND	ND			
		115	7	ND	0.084			0.084
66.	bis(2-ethylhexyl) phthalate	112	7	0.049	0.05			0.05
		115	7	0.049	0.523			0.523
115.	arsenic	112	7	<0.01	0.01			0.01
		115	7	<0.01	0.39			0.39
117.	beryllium	112	7	<0.001	<0.001			<0.001
		115	7	<0.001	0.09			0.09
118.	cadmium	112	7	<0.002	0.004			0.004
		115	7	<0.002	0.05			0.05
119.	chromium	112	7	<0.005	0.008			0.008
		115	7	<0.005	3			3

Table V-19 (Continued)

PRIMARY COLUMBIUM-TANTALUM - SAMPLING DATA
MISCELLANEOUS - TREATMENT PLANT SAMPLES - PLANT B

Pollutant	Stream Code	Sample Type	Concentrations (mg/l, Except as Noted) Source	Day 1	Day 2	Day 3	Average
120. copper	112	7	<0.006	0.01			0.01
	115	7	<0.006	0.4			0.4
121. cyanide	112	7		0.002	0.002	<0.001	0.002
	115	7		0.007	0.002	0.003	0.004
122. lead	112	7	<0.02	0.07			0.07
	115	7	<0.02	3			3
123. mercury	112	7	0.0001	<0.0001			<0.0001
	115	7	0.0001	0.0061			0.0061
124. nickel	112	7	<0.005	0.06			0.06
	115	7	<0.005	2			2
126. silver	112	7	<0.02	0.02			0.02
	115	7	<0.02	0.08			0.08
128. zinc	112	7	<0.06	<0.06			<0.06
	115	7	<0.06	<0.6			<0.6
Nonconventionals							
ammonia	112	7	<0.1	283	132	311	242
	115	7	<0.1	402	500	250	384
chemical oxygen demand (COD)	112	7		44			44
	115	7		408			408

Table V-19 (Continued)

PRIMARY COLUMBIUM-TANTALUM - SAMPLING DATA
MISCELLANEOUS - TREATMENT PLANT SAMPLES - PLANT B

Pollutant	Stream Code	Sample Type	Concentrations (mg/l, Except as Noted) Source	Day 1	Day 2	Day 3	Average
fluoride	112	7	1.6	16			16
	115	7	1.6	3,525			3,525
phenols (total; by 4-AAP method)	112	1		0.01	0.015	0.01	0.012
	115	1		0.025	0.008	0.02	0.018
total organic carbon (TOC)	112	7		9			9
	115	7		118			118
Conventionals							
oil and grease	112	1		4	3		3.5
	115	1		5	6	5	5.3
total suspended solids (TSS)	112	7		36			36
	115	7		3,876			3,876
pH (standard units)	112	1		9	8.8	8.8	
	115	1		3.6	4	3.4	

Table V-20

PRIMARY COLUMBIUM-TANTALUM - SAMPLING DATA
MISCELLANEOUS - TREATMENT PLANT SAMPLES - PLANT D

	Pollutant	Stream Code	Sample Type	Concentrations (mg/l, Except as Noted) Source	Day 1	Day 2	Day 3	Average
Toxic Pollutants								
10.	1,2-dichloroethane	24	2		0.019	0.024	ND	0.022
15.	1,1,2,2-tetrachloro-ethane	24	2		ND	ND	ND	
23.	chloroform	24	2		0.018	0.026	*	0.015
30.	1,2-trans-dichloro-ethylene	24	2		ND	ND	ND	
38.	ethylbenzene	24	2		*	*	ND	*
44.	methylene chloride	24	2		0.636	ND	ND	0.636
47.	bromoform	24	2		ND	ND	ND	
51.	chlorodibromomethane	24	2		ND	ND	ND	
66.	bis(2-ethylhexyl) phthalate	24	7		0.015			0.015
67.	butyl benzyl phthalate	24	7		0.08			0.08
68.	di-n-butyl phthalate	24	7		0.02			0.02
70.	diethyl phthalate	24	7		ND			
71.	dimethyl phthalate	24	7		ND			

Table V-20 (Continued)

PRIMARY COLUMBIUM-TANTALUM - SAMPLING DATA
MISCELLANEOUS - TREATMENT PLANT SAMPLES - PLANT D

	Pollutant	Stream Code	Sample Type	Concentrations (mg/l, Except as Noted) Source	Day 1	Day 2	Day 3	Average
85.	tetrachloroethylene	24	2		0.024	ND	ND	0.024[1]
87.	trichloroethylene	24	2		0.023	<0.024	ND	0.023
114.	antimony	24	7		0.2			0.2
115.	arsenic	24	7		0.45			0.45
117.	beryllium	24	7		<0.02			<0.02
118.	cadmium	24	7		<0.2			<0.2
119.	chromium	24	7		<0.24			<0.24
120.	copper	24	7		0.11			0.11
121.	cyanide	24	7		0.003	0.009	0.009	0.007
122.	lead	24	7		5			5
123.	mercury	24	7		0.0008			0.0008
124.	nickel	24	7		<0.5			<0.5
125.	selenium	24	7		0.045			0.045
128.	zinc	24	7		6			6

Table V-20 (Continued)

PRIMARY COLUMBIUM/TANTALUM - SAMPLING DATA
MISCELLANEOUS - TREATMENT PLANT SAMPLES - PLANT D

Pollutant	Stream Code	Sample Type	Concentrations (mg/l, Except as Noted)				
			Source	Day 1	Day 2	Day 3	Average
Nonconventionals							
ammonia	24	2		21	16.5	27.8	21.77
chemical oxygen demand (COD)	24	7		151			151
fluoride	24	7		6			6
phenols (total; by 4-AAP method)	24	2		0.031	0.03	0.03	0.031
total organic carbon (TOC)	24	7		27			27
Conventionals							
oil and grease	24	1		4	4	4	4
total suspended solids (TSS)	24	7		89			89
pH (standard units)	24	1		12			

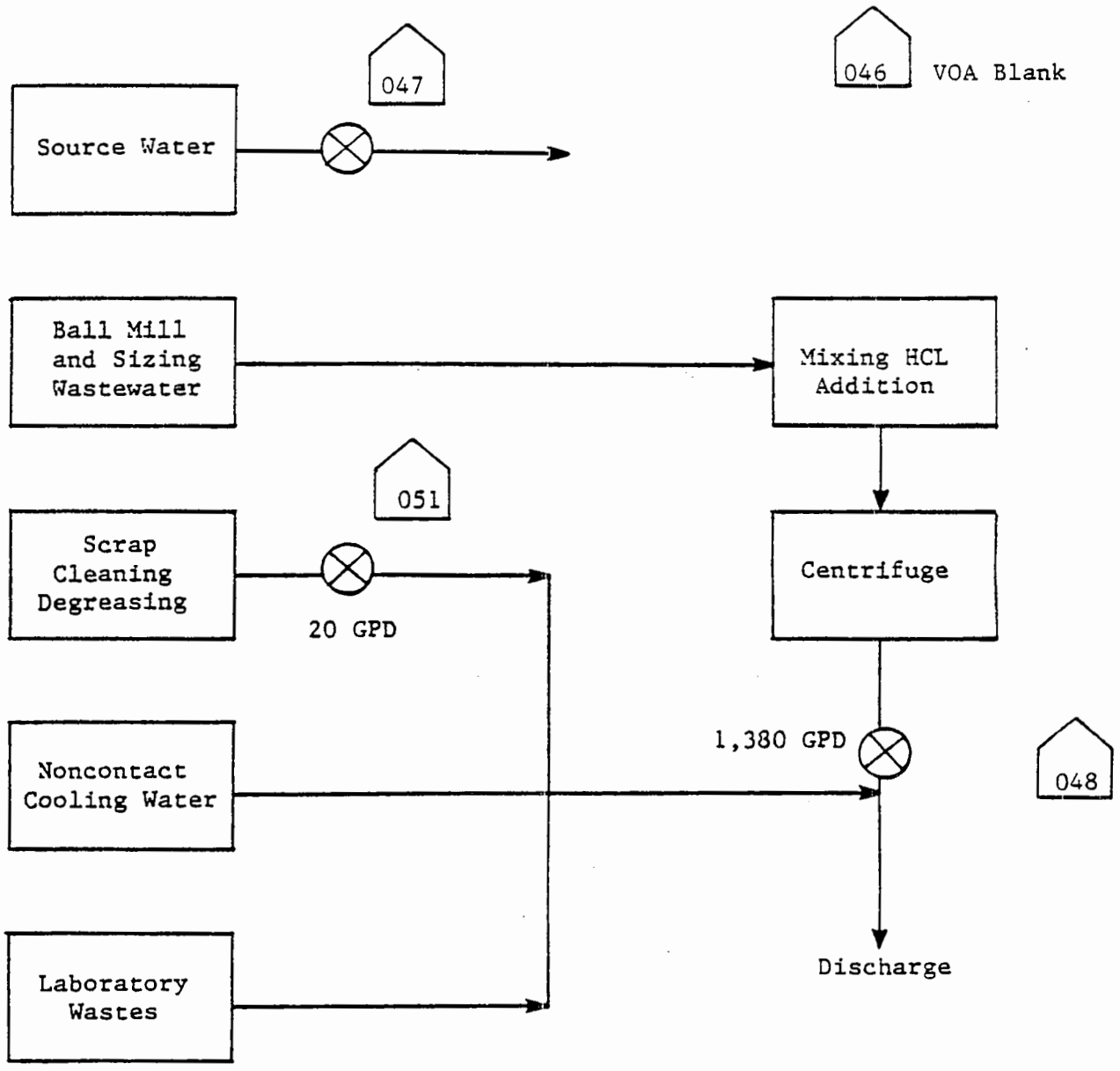

Figure V-1

SAMPLING SITES AT COLUMBIUM-TANTALUM PLANT A

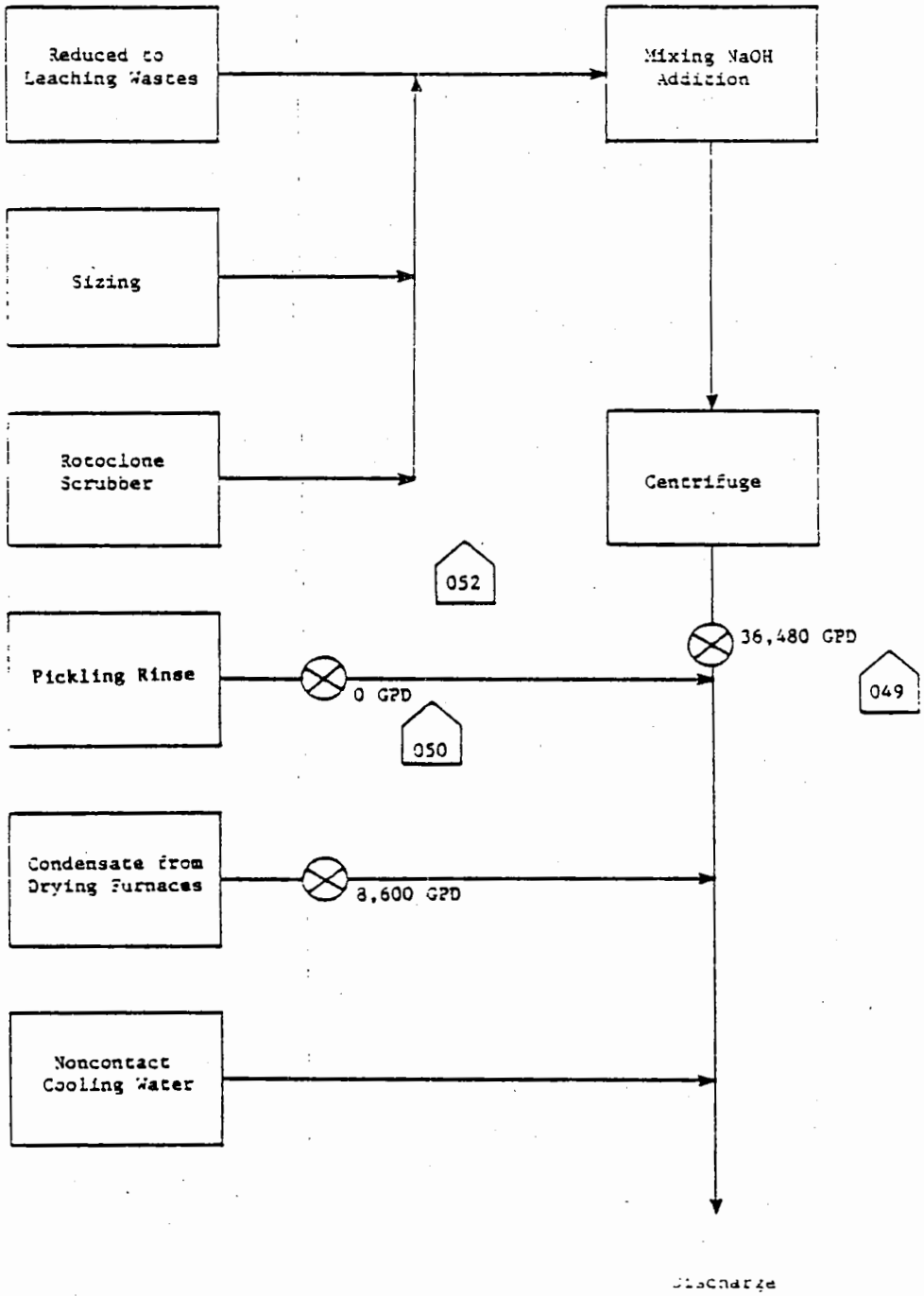

Figure V-2

SAMPLING SITES AT COLUMBIUM-TANTALUM PLANT A (Continued)

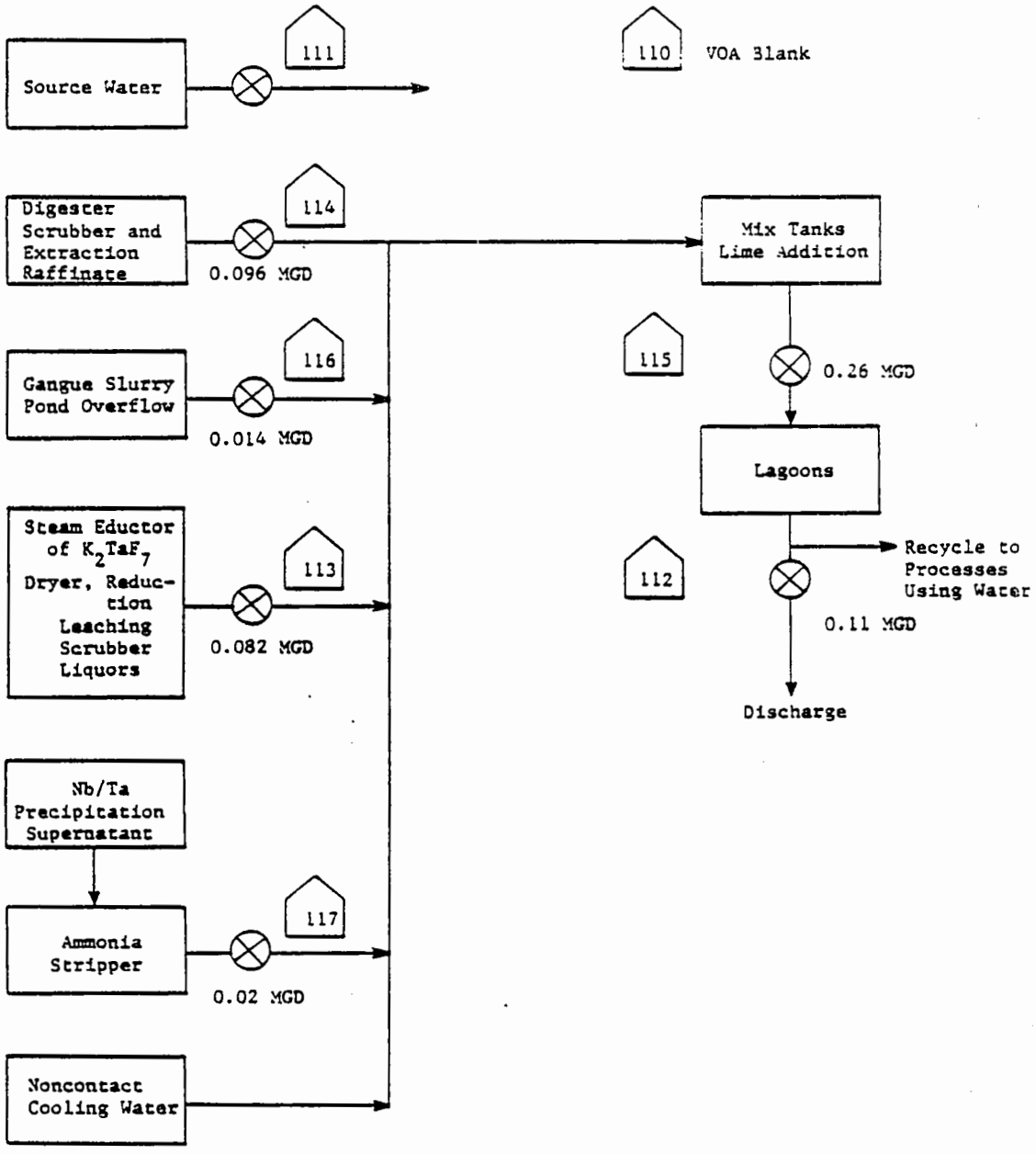

Figure V-3

SAMPLING SITES AT COLUMBIUM-TANTALUM PLANT B

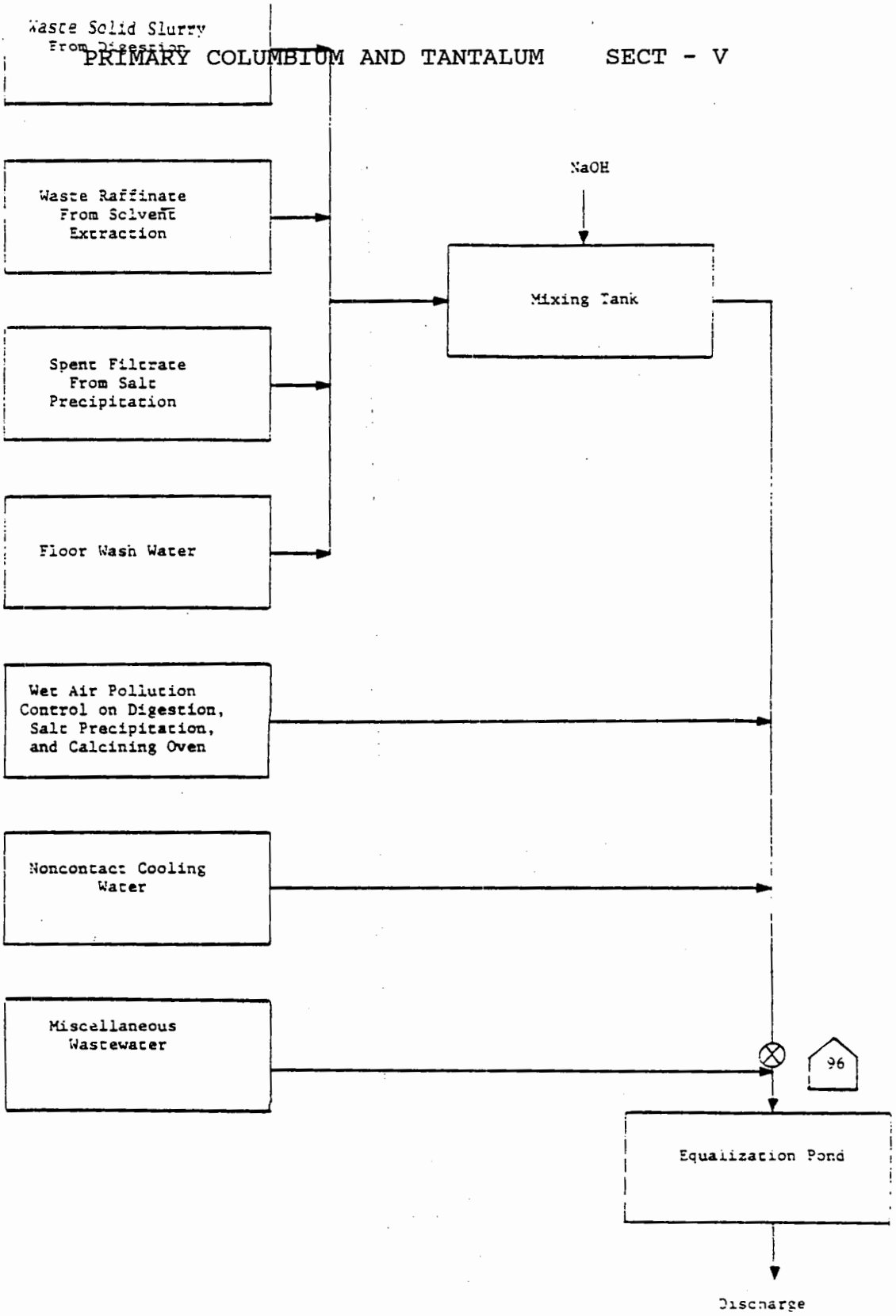

Figure V-4

SAMPLING SITES AT COLUMBIUM-TANTALUM PLANT C

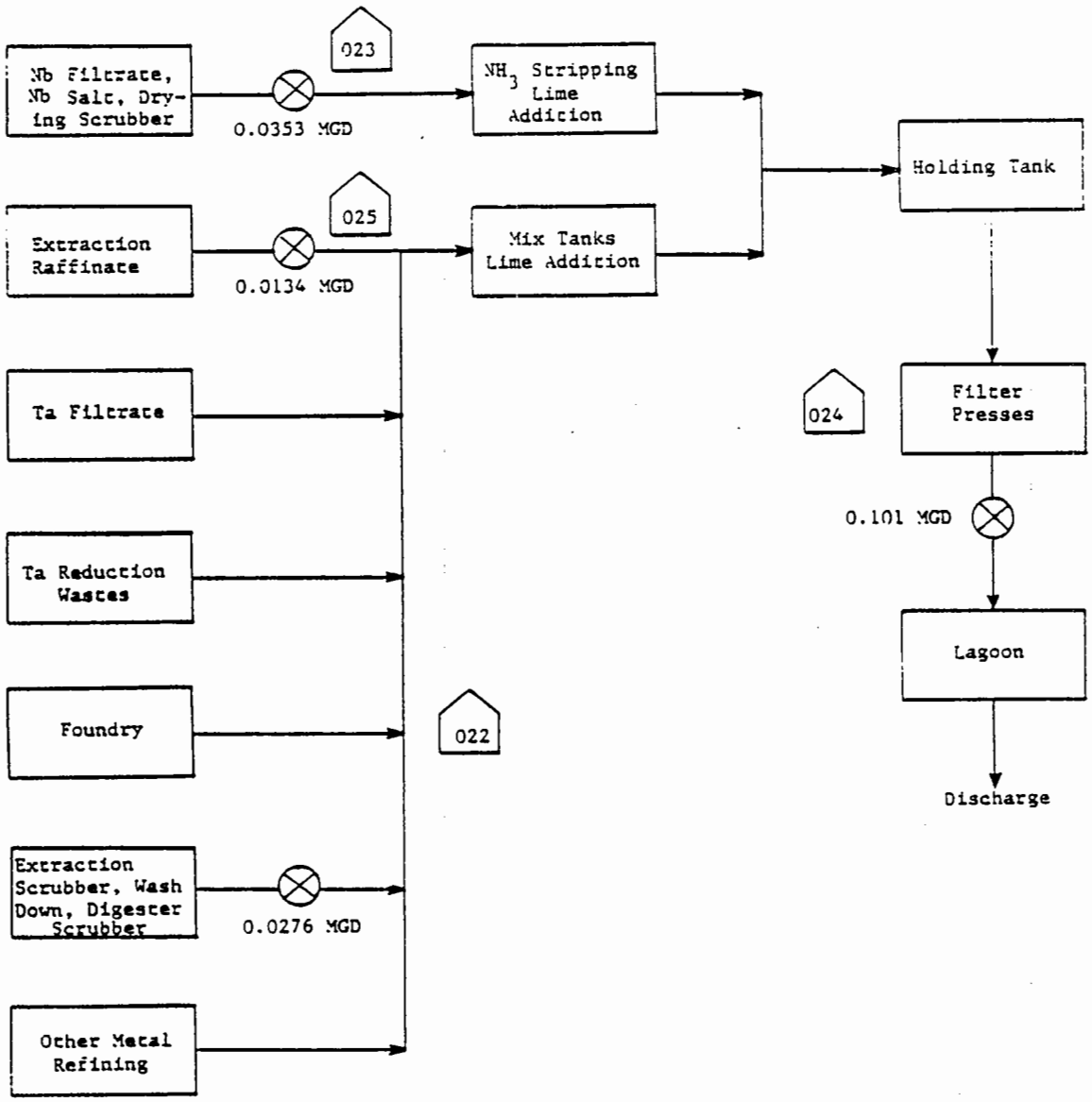

Figure V-5

SAMPLING SITES AT COLUMBIUM-TANTALUM PLANT D

SECTION VI

SELECTION OF POLLUTANT PARAMETERS

This section examines the chemical analysis data presented in Section V and discusses the selection or exclusion of pollutants for potential limitation. The discussion that follows describes the analysis that was performed to select or exclude pollutants for further consideration for limitations and standards. Pollutants will be considered for limitations and standards if they are present in concentrations treatable by the technologies identified in this analysis. The treatable concentrations used for the toxic metals were the long-term performance values achievable by lime precipitation, sedimentation, and filtration. The treatable concentrations used for the toxic organics were the long-term performance values achievable by carbon adsorption.

After proposal, the Agency re-evaluated the treatment performance of activated carbon adsorption to control toxic organic pollutants. The treatment performance for the acid extractable, baseneutral extractable, and volatile organic pollutants has been set equal to the analytical quantification limit of 0.010 mg/l. The analytical quantification limit for pesticides and total phenols (by 4-AAP method) is 0.005 mg/l, which is below the 0.010 mg/l accepted for the other toxic organics. However, to be consistent, the treatment performance of 0.010 mg/l is used for pesticides and total phenols. The 0.010 mg/l concentration is achievable, assuming enough carbon is used in the column and a suitable contact time is allowed. The frequency of occurrence for 36 of the toxic pollutants has been redetermined based on the revised treatment performance value. As a result, the following pollutants, which were not selected at proposal, have been selected for further consideration for limitation:

4. benzene
6. carbon tetrachloride
85. tetrachloroethylene

CONVENTIONAL AND NONCONVENTIONAL POLLUTANT PARAMETERS SELECTED

This study examined samples from the primary columbium-tantalum subcategory for three conventional pollutant parameters (oil and grease, total suspended solids, and pH) and six nonconventional pollutant parameters (ammonia, chemical oxygen demand, chloride, fluoride, total organic carbon, and total phenols).

The following conventional and nonconventional pollutants or pollutant parameters are selected for consideration in establishing limitations for the columbium-tantalum subcategory:

ammonia
total suspended solids (TSS)
fluoride
pH

Five of eight samples analyzed for ammonia exhibited concentrations in excess of 40 mg/l (above the treatability concentration) with values reported as high as 3,210 mg/l. Since five of eight samples are above the 32 mg/l concentration attainable with steam stripping, ammonia is selected for further consideration.

The concentration of suspended solids in the 11 samples for which it was analyzed ranged from 1 mg/l to 27,890 mg/l. Furthermore, most of the treatment used to remove toxic metals does so by precipitating the metals or their salts, and these toxic metal precipitates should not be discharged. A limitation on total suspended solids then, would help ensure that the toxic metals are removed. Thus, total suspended solids is selected for consideration for limitation.

Fluoride ions in low concentration (approximately 1.0 mg/l) are beneficial in drinking water supplies. However, higher concentrations (above 10 mg/l) can be harmful and even fatal to humans and animals. All four samples analyzed for fluoride contained very high concentrations of this pollutant (ranging from 2,800 to 24,000 mg/l). The identified treatment technology can reduce fluoride concentrations to 14.5 mg/l. Consequently, fluoride is selected for consideration for limitation.

The pH range measured was 1.87 to 11.0. Many deleterious effects are caused by either extreme pH values, or rapid changes in pH. Effective removal of toxic metals requires careful control of pH. Therefore, pH is considered for specific regulation in this subcategory.

TOXIC POLLUTANTS

The frequency of occurrence of toxic pollutants in the wastewater samples taken is presented in Table VI-1 (page 4435). These data provide the basis for the categorization of specific pollutants as discussed below. Table VI-1 is based on raw wastewater data from streams 22, 25, 113, 114, and 117 shown in Figures V-1 through V-5 and presented in Tables V-2, V-4, V-6, V-8, and V-12. Treatment plant samples were not considered in the frequency count. Streams 23, 48, 49, 50, 51, 52, 115, and 116 were not used because they contain either treated wastewater or wastewater from processes not considered for regulation in this rulemaking.

TOXIC POLLUTANTS NEVER DETECTED

The toxic pollutants listed in Table VI-2 (page 4439) were not detected in any wastewater samples from this subcategory; therefore, they are not selected for consideration in establishing limitations:

TOXIC POLLUTANTS NEVER FOUND ABOVE THEIR ANALYTICAL QUANTIFICATION LIMIT

The toxic pollutants listed below were never found above their analytical quantification concentration in any wastewater samples from this subcategory; therefore, they are not selected for consideration in establishing limitations.

14. 1,1,2-trichloroethane
15. 1,1,2,2-tetrachloroethylene
20. 2-chloronaphthalene
35. 2,4-dinitrotoluene
36. 2,6-dinitrotoluene
39. fluoranthene
67. butyl benzyl phthalate
73. benzo(a)pyrene
78. anthracene (a)
80. fluorene
81. phenanthrene (a)
113. toxaphene
121. cyanide

(a) Reported together as a combined value.

TOXIC POLLUTANTS PRESENT BELOW CONCENTRATIONS ACHIEVABLE BY TREATMENT

The pollutants listed below are not selected for consideration in establishing limitations because they were not found in any wastewater samples from this subcategory above concentrations considered achievable by existing or available treatment technologies. These pollutants are discussed individually following the list.

117. beryllium
126. silver

Beryllium was detected in five of six samples analyzed. However, it was found above its quantification limit in only two samples, both at concentrations below the treatable concentration of 0.20 mg/l for this pollutant. The concentrations of beryllium in the two samples were 0.18 and 0.02 mg/l. Therefore, beryllium is not selected for consideration for limitation.

Silver was detected in two of six samples analyzed, at values of 0.06 and 0.07 mg/l. However, treatment technology available cannot bring the silver concentration below 0.07 mg/l, so silver is not selected for consideration for limitation.

TOXIC POLLUTANTS DETECTED IN A SMALL NUMBER OF SOURCES

The following pollutants were not selected for regulation on the basis that they were detectable in the effluent from only a small number of sources within the subcategory and are uniquely related to only those sources.

1. acenaphthene
12. hexachloroethane
23. chloroform
44. methylene chloride
47. bromoform
48. dichlorobromomethane
54. isophorone
56. nitrobenzene
66. bis(2-ethylhexyl) phthalate
68. di-n-butyl phthalate
71. dimethyl phthalate
106. PCB-1242 (a)
107. PCB-1254 (a)
108. PCB-1221 (a)
109. PCB-1232 (a)
110. PCB-1248 (b)
111. PCB-1260 (b)
112. PCB-1016 (b)
123. mercury

(a),(b) Reported together as a combined value.

Acenaphthene was detected in one of seven samples, with the one detected value above the 0.010 mg/l concentration considered attainable with the identified treatment technology. The value detected in the sample was 0.017 mg/l. From the waste stream in which acenaphthene was detected, two other samples of this waste stream reported acenaphthene as a not detected. Therefore, acenaphthene is not considered characteristic of columbium-tantalum wastewaters and is not considered for limitation.

Hexachloroethane was present in only one out of seven samples taken, at 0.023 mg/l. Concentrations above 0.010 mg/l are considered treatable by the identified treatment technology. Also, in the dcp, all of the columbium-tantalum plants indicated that this pollutant was either known or believed to be absent. Therefore, hexachloroethane is not selected for consideration for limitation.

Chloroform, a common laboratory solvent, was detected in 10 of 14 samples, ranging from 0.017 to 0.24 mg/l. Concentrations above the analytical quantification limit in two of the three blanks (0.052 mg/l and 0.015 mg/l) analyzed raise the likelihood of sample contamination. Also, in the dcp, all of the columbium-tantalum plants indicated that this pollutant was either known or believed to be absent. Chloroform, therefore, is not selected for consideration for limitation.

One very high value of methylene chloride, 88.4 mg/l, was found in one of 14 samples; methylene chloride was not detected in the remaining 13 samples. But this solvent is so pervasive in laboratories that this one case of detection (out of 14) is probably due to sample contamination. The presence of methylene chloride in one of the blanks attests to this. Also, in the dcp,

all of the columbium-tantalum plants indicated that this pollutant was either known or believed to be absent. Therefore, methylene chloride is not selected for consideration for limitation.

Bromoform was found in two of the 14 raw waste samples. Only one of the concentrations found was above the 0.010 mg/l concentration considered attainable with identified treatment technology. The treatable value was 0.021 mg/l. The other concentration was below the analytical quantification limit. Therefore, bromoform is not selected for consideration for limitation.

Dichlorobromomethane was detected in one of the 14 samples, at a concentration above the 0.010 mg/l concentration considered attainable with identified treatment technology. The value detected in the sample was 0.038 mg/l. Two other samples from the waste stream in which dichlorobromomethane was reported were analyzed. The results were one "not detected" and one "detected below quantification concentration." Therefore, dichlorobromomethane is not considered characteristic of columbium-tantalum wastewaters and is not considered for limitation.

Isophorone was found in two of seven samples; only one was above the 0.010 mg/l concentration considered attainable with the identified treatment technology. The other sample had a concentration below the analytical quantification limit. The treatable value was 0.029 mg/l and was obtained from a sample of solvent extraction raffinate. Two other samples of solvent extraction raffinate were reported as not detected. Therefore, isophorone is not considered for limitation.

Nitrobenzene was detected in one of seven samples, and above the 0.010 mg/l concentration considered attainable with the identified treatment technology. The value detected was 0.1 mg/l. This value was obtained from a sample of solvent extraction raffinate in which two other samples were reported as not detected. Nitrobenzene, therefore, is not considered for limitation.

Bis(2-ethylhexyl) phthalate was reported present above its analytical quantification limit in five of seven samples; the reported concentrations ranged from 0.02 mg/l to 1.2 mg/l. This compound is a plasticizer found in many plastic materials used in manufacturing plants, thus it is not considered attributable to specific materials or processing in this subcategory. Also, in the dcp, all of the columbium-tantalum plants indicated that this pollutant was either known or believed to be absent. Therefore, bis(2-ethylhexyl) phthalate is not selected for consideration for limitation.

Di-n-butyl phthalate was measured above its concentration considered attainable with the identified treatment technology in three of seven samples; the measured concentrations ranged from

0.012 mg/l to 0.08 mg/l. This substance is a plasticizer found in many products used in manufacturing plants; it is not considered a pollutant specific to this point source. Also, in the dcp, all of the columbium-tantalum plants indicated that this pollutant was either known or believed to be absent. Therefore, di-n-butyl phthalate is not selected for consideration for limitation.

Dimethyl phthalate was reported present above its analytical quantification limit in two of seven samples; the reported concentrations were 0.012 mg/l and 0.02 mg/l. This compound is a plasticizer found in many plastic materials used in manufacturing plants, and is not considered a point source specific pollutant. Also, in the dcp, all of the columbium-tantalum plants indicated that this pollutant was either known or believed to be absent. Therefore, dimethyl phthalate is not selected for consideration for limitation.

PCB-1242, PCB-1254, and PCB-1221 were measured above their analytical quantification limit in only one of seven samples. The observed concentration was 0.0516 mg/l. Since PCBs were found in just one plant, and since in the dcp, all of the columbium-tantalum plants indicated that this pollutant was either known or believed to be absent, they are not selected for consideration for limitation.

PCB-1232, PCB-1248, PCB-1260, and PCB-1016 were measured above their analytical quantification limit in one of seven samples. The observed concentration was 0.336 mg/l. Since PCB's were found in only one plant, and since in the dcp, all of the columbium-tantalum plants indicated that this pollutant was either known or believed to be absent, they are not selected for consideration for limitation.

Mercury was found above the concentration achievable by treatment in one of six samples. Only one sample at 0.063 mg/l was detected above the treatable concentration of 0.036 mg/l. Since the five other samples were below the treatable concentration, mercury is not selected for consideration for limitation.

TOXIC POLLUTANTS SELECTED FOR FURTHER CONSIDERATION FOR LIMITATIONS AND STANDARDS

The toxic pollutants listed below were selected for further consideration in establishing limitations and standards for this subcategory. The toxic pollutants selected are each discussed following the list.

4. benzene
6. carbon tetrachloride
7. chlorobenzene
8. 1,2,4-trichlorobenzene
10. 1,2-dichloroethane
30. 1,2-trans-dichloroethylene
38. ethylbenzene

51. chlorodibromomethane
85. tetrachloroethylene
87. trichloroethylene
114. antimony
115. arsenic
116. asbestos
118. cadmium
119. chromium
120. copper
122. lead
124. nickel
125. selenium
127. thallium
128. zinc

Benzene was detected in 12 of 14 samples, with one of the concentrations above the 0.010 mg/l concentration considered attainable with the identified treatment technology. Eleven of these samples were below the quantification concentration. The value detected above the treatable concentration was 0.042 mg/l. Benzene was detected in four different process waste streams representing two plants. Therefore, benzene cannot be considered site-specific and is selected for further consideration for limitation.

Carbon tetrachloride was found in three of the 14 samples, with two of the concentrations above the 0.010 mg/l concentration considered attainable with identified treatment technology. The values found above the treatable concentration were 0.017 mg/l and 0.074 mg/l. Both of these values are from the same waste stream and represent two of the six samples from concentration digestion scrubber. Therefore, carbon tetrachloride is selected for further consideration for limitation.

Chlorobenzene was detected in three of 14 samples, with two of the concentrations above the 0.010 mg/l concentration considered attainable with the identified treatment technology. The values detected above the treatable concentration were 1.00 and 0.034 mg/l. Both of these values are from the same waste stream and represent two of the six samples analyzed from solvent extraction raffinate. Therefore, chlorobenzene is selected for further consideration for limitation.

1,2,4-Trichloroethylene was detected in two of seven samples, with one of the values above the 0.01 mg/l concentration considered attainable with the identified treatment technology. The value detected above its treatable concentration was 0.051 mg/l. Both samples in which 1,2,4-trichloroethylene was detected are from solvent extraction raffinate. Since the waste stream is from a solvent extraction process using an organic solvent, and 1,2,4-trichloroethylene was found above a treatable concentration, it is selected for further consideration for limitation.

1,2-Dichloroethane was detected in nine of 14 samples, with two

of the concentrations above the 0.010 mg/l concentration considered attainable with the identified treatment technology. The values detected above the treatable concentration ranged from 0.016 mg/l to 0.156 mg/l. 1,2-Dichloroethane was detected above quantification in five different process waste streams representing two different plants. Therefore, 1,2-dichloroethane is not site-specific, and it is selected for further consideration for limitation.

1,2-trans-dichloroethylene was detected in two of 14 samples, with both of the concentrations above the 0.010 mg/l concentration considered attainable with the identified treatment technology. The values detected above the treatable concentration were 0.484 and 0.26 mg/l. These two values were taken from two different waste streams that were sampled three times each. One of these streams is from solvent extraction where organic solvents are used. Therefore, 1,2-trans-dichloroethylene is selected for consideration for limitation.

Ethylbenzene was detected in four of 14 samples, with two of the concentrations above the 0.010 mg/l concentration considered attainable with the identified treatment technology. The values detected above the treatable concentration were 0.04 mg/l and 0.057 mg/l. Ethylbenzene was detected in two different process waste streams representing two plants. Therefore, ethylbenzene is selected for further consideration for limitation.

Chlorodibromomethane was detected in four of 14 samples, with one of the concentrations above the 0.010 mg/l concentration considered attainable with the identified treatment technology. The values detected above its concentration considered attainable with identified treatment technology ranged from 0.02 to 7.08 mg/l. The detection of chlorodibromomethane was not site-specific as it was detected in three different process wastewater streams representing two plants. Therefore, chlorodibromomethane is selected for further consideration for limitation.

Tetrachloroethylene was found in four of 14 samples, with two samples above the concentration considered attainable with identified treatment technology. The values detected above the treatable concentration were 0.157 mg/l and 0.235 mg/l. Tetrachloroethylene was found in three different process waste streams representing two plants. Therefore, this compound is selected for further consideration for limitation.

Trichloroethylene was detected in 12 of 14 samples, with one of the concentrations above the 0.010 mg/l concentration considered attainable with the identified treatment technology. Eleven of these samples were below the quantification concentration. The value detected above the treatable concentration was 0.235 mg/l. Trichloroethylene was detected in four different process waste streams representing two plants. Trichloroethylene cannot be considered site-specific and is therefore selected for further consideration for limitation.

Antimony was found in five of seven samples analyzed; in all five of these, it was measured above its treatable concentration (0.47 mg/l) at concentrations ranging up to 30 mg/l. Therefore, antimony is selected for further consideration for limitation.

Arsenic was found in all six samples analyzed; three samples contained concentrations above its treatable concentration of 0.34 mg/l. Values were as high as 45 mg/l. Therefore, arsenic is selected for further consideration for limitation.

Analyses were made for asbestos at only one plant. The raw wastewater sample contained 980 million fibers per liter (MFL), while the plant influent contained less than 9 MFL. Since asbestos was detected and is above the treatable concentration of 10 MFL in the only sample analyzed, it is considered for further consideration for limitation.

Cadmium was detected in four of six samples, and was found above its treatable concentration of 0.049 mg/l. The concentration of cadmium in the sample was 40 mg/l. Cadmium, therefore, is selected for further consideration for limitation.

Five of six samples analyzed for chromium showed concentrations in excess of its treatable concentration (0.07 mg/l). Wastewater at one sampling site was found to contain 1,000 mg/l on each of three days sampled. Therefore, chromium is selected for further consideration for limitation.

Copper was found in all six samples analyzed, and occurred at concentrations above its treatable concentration of 0.39 mg/l in five of these. Values ranged from 0.8 to 300 mg/l. Therefore, copper is selected for further consideration for limitation.

Lead occurred far above its treatable concentration of 0.08 mg/l in five of six samples. Concentrations ranged from 1.0 to 1,000 mg/l. Lead, therefore, is selected for further consideration for limitation.

Two out of six samples analyzed for nickel yielded values above the treatable concentration of 0.22 mg/l. The reported concentrations were 5 and 1 mg/l. Therefore, nickel is selected for further consideration for limitation.

Selenium was found in three of six samples analyzed, all three above its treatable concentration (0.20 mg/l). Values were as high as 70 mg/l. Therefore, selenium is selected for further consideration for limitation.

Thallium was found above its treatable concentration of 0.34 mg/l in three of six samples, with concentrations of 0.83, 1.14, and 1.18 mg/l. Therefore, thallium is selected for further consideration for limitation.

Four of six samples analyzed contained zinc at concentrations above the treatability concentration of 0.23 mg/l. Values ranged

from less than 400 mg/l to 1,000 mg/l. Zinc is thus selected for further consideration for limitation.

Table VI-1

FREQUENCY OF OCCURRENCE OF TOXIC POLLUTANTS
PRIMARY COLUMBIUM-TANTALUM SUBCATEGORY
RAW WASTEWATER

Pollutant	Analytical Quantification Concentration (mg/l)(a)	Treatable Concentration (mg/l)(b)	Number of Streams Analyzed	Number of Samples Analyzed	ND	Detected Below Quantification Concentration	Detected Below Treatable Concentration	Detected Above Treatable Concentration
1. acenaphthene	0.010	0.010	5	7	6			1
2. acrolein	0.010	0.010	5	14	14			
3. acrylonitrile	0.010	0.010	5	14	14			
4. benzene	0.010	0.010	5	14	2	11		1
5. benzidine	0.010	0.010	5	7	7			
6. carbon tetrachloride	0.010	0.010	5	14	11	1		2
7. chlorobenzene	0.010	0.010	5	12	11	1		2
8. 1,2,4-trichlorobenzene	0.010	0.010	5	7	5	1		1
9. hexachlorobenzene	0.010	0.010	5	7	7			
10. 1,2-dichloroethane	0.010	0.010	5	14	5	1		8
11. 1,1,1-trichloroethane	0.010	0.010	5	14	14			
12. hexachloroethane	0.010	0.010	5	7	6			1
13. 1,1-dichloroethane	0.010	0.010	5	14	14			
14. 1,1,2-trichloroethane	0.010	0.010	5	14	12	2		
15. 1,1,2,2-tetrachloroethane	0.010	0.010	5	14	12	2		
16. chloroethane	0.010	0.010	5	14	14			
17. bis(chloromethyl) ether	0.010	0.010	5	14	14			
18. bis(2-chloroethyl) ether	0.010	0.010	5	7	7			
19. 2-chloroethyl vinyl ether	0.010	0.010	5	14	14			
20. 2-chloronaphthalene	0.010	0.010	5	7	6	1		
21. 2,4,6-trichlorophenol	0.010	0.010	2	4	4			
22. parachlorometa cresol	0.010	0.010	2	4	4			
23. chloroform	0.010	0.010	5	14	4			10
24. 2-chlorophenol	0.010	0.010	2	4	4			
25. 1,2-dichlorobenzene	0.010	0.010	5	7	7			
26. 1,3-dichlorobenzene	0.010	0.010	5	7	7			
27. 1,4-dichlorobenzene	0.010	0.010	5	7	7			
28. 3,3'-dichlorobenzidine	0.010	0.010	5	7	7			
29. 1,1-dichloroethylene	0.010	0.010	5	14	14			
30. 1,2-trans-dichloroethylene	0.010	0.010	5	14	12			2
31. 2,4-dichlorophenol	0.010	0.010	2	4	4			
32. 1,2-dichloropropane	0.010	0.010	5	14	14			
33. 1,3-dichloropropylene	0.010	0.010	5	14	14			
34. 2,4-dimethylphenol	0.010	0.010	2	4	4			
35. 2,4-dinitrotoluene	0.010	0.010	5	7	6	1		
36. 2,6-dinitrotoluene	0.010	0.010	5	7	6	1		
37. 1,2-diphenylhydrazine	0.010	0.010	5	7	7			

Table VI-1 (Continued)

FREQUENCY OF OCCURRENCE OF TOXIC POLLUTANTS
PRIMARY COLUMBIUM-TANTALUM SUBCATEGORY
RAW WASTEWATER

Pollutant	Analytical Quantification Concentration (mg/l)(a)	Treatable Concentration (mg/l)(b)	Number of Streams Analyzed	Number of Samples Analyzed	ND	Detected Below Quantification Concentration	Detected Below Treatable Concentration	Detected Above Treatable Concentration
38. ethylbenzene	0.010	0.010	5	14	10	2		2
39. fluoranthene	0.010	0.010	5	7	7			
40. 4-chlorophenyl phenyl ether	0.010	0.010	5	7	7			
41. 4-bromophenyl phenyl ether	0.010	0.010	5	7	7			
42. bis(2-chloroisopropyl) ether	0.010	0.010	5	7	7			
43. bis(2-chloroethoxy) methane	0.010	0.010	5	7	7			
44. methylene chloride	0.010	0.010	5	14	13			1
45. methyl chloride	0.010	0.010	5	14	14			
46. methyl bromide	0.010	0.010	5	14	14			
47. bromoform	0.010	0.010	5	14	12	1		1
48. dichlorobromomethane	0.010	0.010	5	14	13			1
49. trichlorofluoromethane	0.010	0.010	5	14	14			
50. dichlorodifluoromethane	0.010	0.010	5	14	14			
51. chlorodibromomethane	0.010	0.010	5	14	10	3		1
52. hexachlorobutadiene	0.010	0.010	5	7	7			
53. hexachlorocyclopentadiene	0.010	0.010	5	7	7			
54. isophorone	0.010	0.010	5	7	5	1		1
55. naphthalene	0.010	0.010	5	7	7			
56. nitrobenzene	0.010	0.010	5	7	6			1
57. 2-nitrophenol	0.010	0.010	2	4	4			
58. 4-nitrophenol	0.010	0.010	2	4	4			
59. 2,4-dinitrophenol	0.010	0.010	2	4	4			
60. 4,6-dinitro-o-cresol	0.010	0.010	2	4	4			
61. N-nitrosodimethylamine	0.010	0.010	5	7	7			
62. N-nitrosodiphenylamine	0.010	0.010	5	7	7			
63. N-nitrosodi-n-propylamine	0.010	0.010	5	7	7			
64. pentachlorophenol	0.010	0.010	2	4	4			
65. phenol	0.010	0.010	2	4	4			
66. bis(2-ethylhexyl) phthalate	0.010	0.010	5	7	1	1		5
67. butyl benzyl phthalate	0.010	0.010	5	7	7			
68. di-n-butyl phthalate	0.010	0.010	5	7	3	1		3
69. di-n-octyl phthalate	0.010	0.010	5	7	7			
70. diethyl phthalate	0.010	0.010	5	7	7			
71. dimethyl phthalate	0.010	0.010	5	7	5	1		1
72. benzo(a)anthracene	0.010	0.010	5	7	7			
73. benzo(a)pyrene	0.010	0.010	5	7	7			
74. 3,4-benzofluoranthene	0.010	0.010	5	7	7			

Table VI-1 (Continued)

FREQUENCY OF OCCURRENCE OF TOXIC POLLUTANTS
PRIMARY COLUMBIUM-TANTALUM SUBCATEGORY
RAW WASTEWATER

Pollutant	Analytical Quantification Concentration (mg/l)(a)	Treatable Concentration (mg/l)(b)	Number of Streams Analyzed	Number of Samples Analyzed	ND	Detected Below Quantification Concentration	Detected Below Treatable Concentration	Detected Above Treatable Concentration
75. benzo(k)fluoranthene	0.010	0.010	5	7	7			
76. chrysene	0.010	0.010	5	7	7			
77. acenaphthylene	0.010	0.010	5	7	7			
78. anthracene (c)	0.010	0.010	5	7	6	1		
79. benzo(ghi)perylene	0.010	0.010	5	7	7			
80. fluorene	0.010	0.010	5	7	7			
81. phenanthrene (c)	0.010							
82. dibenzo(a,h)anthracene	0.010	0.010	5	7	7			
83. indeno(1,2,3-cd)pyrene	0.010	0.010	5	7	7			
84. pyrene	0.010	0.010	5	7	7			
85. tetrachloroethylene	0.010	0.010	5	14	10	2		2
86. toluene	0.010	0.010	5	14	14			
87. trichloroethylene	0.010	0.010	5	14	2	11		1
88. vinyl chloride	0.010	0.010	5	14	14			
89. aldrin	0.005	0.010	5	7	7			
90. dieldrin	0.005	0.010	5	7	7			
91. chlordane	0.005	0.010	5	7	7			
92. 4,4'-DDT	0.005	0.010	5	7	7			
93. 4,4'-DDE	0.005	0.010	5	7	7			
94. 4,4'-DDD	0.005	0.010	5	7	7			
95. alpha-endosulfan	0.005	0.010	5	7	7			
96. beta-endosulfan	0.005	0.010	5	7	7			
97. endosulfan sulfate	0.005	0.010	5	7	7			
98. endrin	0.005	0.010	5	7	7			
99. endrin aldehyde	0.005	0.010	5	7	7			
100. heptachlor	0.005	0.010	5	7	7			
101. heptachlor epoxide	0.005	0.010	5	7	7			
102. alpha-BHC	0.005	0.010	5	7	7			
103. beta-BHC	0.005	0.010	5	7	7			
104. gamma-BHC	0.005	0.010	5	7	7			
105. delta-BHC	0.005	0.010	5	7	7			
106. PCB-1242 (d)	0.005	0.010	5	7	1	5		1
107. PCB-1254 (d)	0.005							
108. PCB-1221 (d)	0.005							
109. PCB-1232 (e)	0.005	0.010	5	7	1	5		1
110. PCB-1248 (e)	0.005							
111. PCB-1260 (e)	0.005							
112. PCB-1016 (e)	0.005							

Table VI-1 (Continued)

FREQUENCY OF OCCURRENCE OF TOXIC POLLUTANTS
PRIMARY COLUMBIUM-TANTALUM SUBCATEGORY
RAW WASTEWATER

Pollutant	Analytical Quantification Concentration (mg/l)(a)	Treatable Concentration (mg/l)(b)	Number of Streams Analyzed	Number of Samples Analyzed	ND	Detected Below Quantification Concentration	Detected Below Treatable Concentration	Detected Above Treatable Concentration
113. toxaphene	0.005	0.010	5	7	2	5		
114. antimony	0.100	0.47	4	6	2			4
115. arsenic	0.010	0.34	4	6			3	3
116. asbestos	10 MFL	10 MFL	1	1				1(f)
117. beryllium	0.010	0.20	4	6	1	3	2	
118. cadmium	0.002	0.049	4	6	2	3		1
119. chromium	0.005	0.07	4	6	1			5
120. copper	0.009	0.39	4	6			1	5
121. cyanide	0.100(g)	0.047	4	11		11		
122. lead	0.020	0.08	4	6	1			5
123. mercury	0.0001	0.036	4	6	1		4	1
124. nickel	0.005	0.22	4	6	4			2
125. selenium	0.01	0.20	4	6	3			3
126. silver	0.02	0.07	4	6	4		2	
127. thallium	0.100	0.34	4	6	3			3
128. zinc	0.050	0.23	4	6	2			4
129. 2,3,7,8-tetrachlorodibenzo-p-dioxin (TCDD)	Not Analyzed							

(a) Analytical quantification concentration was reported with the data (see Section V).

(b) Treatable concentrations are based on performance of lime precipitation, sedimentation, and filtration for toxic metal pollutants and activated carbon adsorption for toxic organic pollutants.

(c),(d),(e) Reported together.

(f) 101+ MFL.

(g) Analytical quantification concentration for EPA Method 335.2, Total Cyanide Methods for Chemical Analysis of Water and Wastes, EPA-600/4-79-020, March 1979.

TABLE VI-2

TOXIC POLLUTANTS NEVER DETECTED

2. acrolein
3. acrylonitrile
5. benzidine
9. hexachlorobenzene
11. 1,1,1-trichloroethane
13. 1,1-dichloroethane
16. chloroethane
17. DELETED
18. bis(2-chloroethyl) ether
19. 2-chloroethyl vinyl ether
21. 2,4,6-trichlorophenol
22. parachlorometa cresol
24. 2-chlorophenol
25. 1,2-dichlorobenzene
26. 1,3-dichlorobenzene
27. 1,4-dichlorobenzene
28. 3,3'-dichlorobenzidine
29. 1,1-dichloroethylene
31. 2,4-dichlorophenol
32. 1,2-dichloropropane
33. 1,3-dichloropropylene
34. 2,4-dimethylphenol
37. 1,2-diphenylhydrazine
40. 4-chlorophenyl phenyl ether
41. 4-bromophenyl phenyl ether
42. bis(2-chloroisopropyl) ether
43. bis(2-chloroethoxy) methane
45. methyl chloride
46. methyl bromide
49. DELETED
50. DELETED
52. hexachlorobutadiene
53. hexachlorocyclopentadiene
55. naphthalene
57. 2-nitrophenol
58. 4-nitrophenol
59. 2,4-dinitrophenol
60. 4,6-dinitro-o-cresol
61. N-nitrosodimethylamine
62. N-nitrosodiphenylamine
63. N-nitrosodi-n-propylamine
64. pentachlorophenol
65. phenol
69. di-n-octyl phthalate
70. diethyl phthalate
72. benzo(a)anthracene
74. 3,4-benzofluoranthene

TABLE VI-2 (Continued)

TOXIC POLLUTANTS NEVER DETECTED

75. benzo(k)fluoranthene
76. chrysene
77. acenaphthylene
79. benzo(ghi)perylene
82. dibenzo(a,h)anthracene
83. indeno(1,2,3-cd)pyrene
84. pyrene
86. toluene
88. vinyl chloride
89. aldrin
90. dieldrin
91. chlordane
92. 4,4'-DDT
93. 4,4'-DDE
94. 4,4'-DDD
95. alpha-endosulfan
96. beta-endosulfan
97. endosulfan sulfate
98. endrin
99. endrin aldehyde
100. heptachlor
101. heptachlor epoxide
102. alpha-BHC
103. beta-BHC
104. gamma-BHC
105. delta-BHC
129. 2,3,7,8-tetrachlorodibenzo-p-dioxin (TCDD)

SECTION VII

CONTROL AND TREATMENT TECHNOLOGIES

The preceding sections of this supplement discussed the sources, flows, and characteristics of the wastewaters generated in the primary columbium-tantalum subcategory. This section summarizes the description of these wastewaters and indicates the level of treatment which is currently practiced for each waste stream.

CURRENT CONTROL AND TREATMENT PRACTICES

This section presents a summary of the control and treatment technologies that are currently applied to each of the sources generating wastewater in this subcategory. As discussed in Section V, wastewater associated with the primary columbium-tantalum subcategory is characterized by the presence of the toxic metal pollutants, ammonia, and suspended solids. This analysis is supported by the raw (untreated) wastewater data presented for specific sources as well as combined waste streams in Section V. Generally, these pollutants are present in each of the waste streams at concentrations above treatability, so these waste streams are commonly combined for treatment to reduce the concentrations of these pollutants. Construction of one wastewater treatment system for combined treatment allows plants to take advantage of economies of scale, and in some instances, to combine streams of differing alkalinity to reduce treatment chemical requirements. Four plants in this subcategory currently have lime and settle treatment systems. As such, three options were selected for consideration for BPT, BAT, BDT, and pretreatment in this subcategory after proposal, based on combined treatment of these compatible waste streams.

CONCENTRATE DIGESTION WET AIR POLLUTION CONTROL

All three plants which practice digestion use hydrofluoric acid to leach the columbium and tantalum ore concentrates. The leachate goes to solvent extraction. Wet scrubbers are used at all three plants, one with recycle (86 percent) and a bleed stream, and two with once-through water usage. Wet scrubbers are necessary due to the acidic nature of the emissions and the presence of gaseous fluoride. The scrubber liquor has treatable concentrations of suspended solids, fluoride and metals. The addition of alkali is used in all cases to reduce these high concentrations. Existing wastewater treatment schemes for this waste stream are lime precipitation and sedimentation, and neutralization with caustic.

SOLVENT EXTRACTION RAFFINATE

After methyl isobutyl ketone extraction the barren raffinate must be treated. One plant of the three plants with this wastewater recycles a portion of the raffinate to the leaching process to

utilize the acidic nature of this waste stream. The raffinate has characteristics similar to the concentrate digestion scrubber liquor. This stream is treated as follows:

1. Lime addition and sedimentation (partial recycle);
2. Lime addition, sedimentation, and filtration (no recycle); and
3. Neutralization and equalization pond (no recycle).

SOLVENT EXTRACTION WET AIR POLLUTION CONTROL

This waste stream is generated by wet air pollution control equipment located over the solvent extraction process. Two plants use wet scrubbers to control solvent extraction air emissions. One plant does not recycle the scrubber effluent; the other plant uses the same scrubber for solvent extraction and concentrate digestion, practicing 86 percent recycle. Waste characteristics are very similar to those found in the solvent extraction raffinate and concentrate digester scrubber waste streams; treatment similar to these two waste streams is indicated. Indeed, the established treatment techniques are identical:

1. Lime addition and sedimentation (partial recycle), and
2. Lime addition, sedimentation, (no recycle).

PRECIPITATION AND FILTRATION

The metal salts in the pregnant extraction solutions are precipitated either by oxide precipitation with ammonia or by potassium fluoride precipitation of potassium fluotantalate (K_2TaF_7). The barren solutions must subsequently be treated. Three plants produce this wastewater. The wastewater contains treatable concentrations of ammonia, fluoride, metals, and suspended solids. The following wastewater treatment schemes are practiced for this stream:

1. Ammonia steam stripping, lime addition, and sedimentation (partial recycle); and
2. Neutralization and equalization pond (no recycle).

PRECIPITATION AND FILTRATION WET AIR POLLUTION CONTROL

This waste stream is generated by wet air pollution control equipment located over the precipitation process. Two plants use wet scrubbers to control precipitation air emissions. Neither plant recycles this wastewater. Waste characteristics are very similar to those found in the precipitation and filtration supernatant. One plant discharges this waste stream with no treatment, while the other uses ammonia steam stripping followed by lime and settle treatment.

TANTALUM SALT DRYING

Only one of the five plants surveyed captures tantalum salt drying steam. This wastewater contains treatable concentrations of fluoride when potassium fluoride is used in precipitation. The treatment scheme used to treat tantalum salt drying wastewater by the one plant is lime and settle.

OXIDES CALCINING WET AIR POLLUTION CONTROL

Four of the five plants surveyed practice calcining of columbium pentoxide prior to shipment or further processing. Wet scrubbers are necessary to control ammonia and fluoride emissions during this process. Two plants practice recycle with recycle rates of 89 and 100 percent. Suspended solids and metals may be present in this wastewater in addition to ammonia and fluoride. The treatment schemes used to treat oxide calcining scrubber liquor by the four plants which practice calcining are as follows:

1. Ammonia steam stripping and lime and settle (no recycle),
2. Ammonia steam stripping and lime and settle (recycle), and
3. No treatment.

REDUCTION OF TANTALUM SALT TO METAL

Four plants reduce columbium or tantalum salts to the metal. One plant practices aluminothermic reduction, which produces no wastewater. The other three plants practice sodium reduction. Leaching after sodium reduction, a common practice for tantalum production, is a major source of wastewater. After completion of the reduction reaction and subsequent cooling, the tantalum exists as small particles of metal in a matrix of potassium and sodium salts. The salts are removed by successive leaches in water and acid to produce a pure metal powder. The resulting wastewater contains fluoride at treatable concentrations, as well as toxic metals and oil and grease. The wastewater treatment schemes used for this waste stream are as follows:

1. Lime addition and sedimentation, and
2. Caustic addition and centrifugation (no recycle).

REDUCTION OF TANTALUM SALT TO METAL WET AIR POLLUTION CONTROL

Wet scrubbers are used to control emissions during the reduction reaction. Two plants use wet scrubbers, neither practicing recycle of the scrubber liquor. This wastewater is similar in characteristic to the reduction wastewater. It contains toxic metals and fluoride and chloride in treatable concentrations. Treatment for the waste stream consists of:

1. Lime addition and sedimentation (no recycle), and
2. Caustic addition and centrifugation (no recycle).

TANTALUM POWDER WASH

One plant washes tantalum powder after reduction and uses a scrubber in this process. No recycle was reported. This wastewater is expected to be acidic and contain little or no toxic pollutants. Currently this plant treats the wastewater using lime and settle treatment methods.

CONSOLIDATION AND CASTING CONTACT COOLING

Four plants reported consolidation and casting operations. One plant generates no wastewater. Two plants use noncontact cooling water. The fourth plant generates contact cooling water but recycles 100 percent through a cooling tower. Therefore, no wastewater is discharged for this waste stream.

CONTROL AND TREATMENT OPTIONS

The Agency examined three control and treatment technology alternatives since proposal that are applicable to the primary columbium-tantalum subcategory. The options selected for evaluation represent a combination of in-process flow reduction, pretreatment technology applicable to individual waste streams, and end-of-pipe treatment technologies.

OPTION A

Option A for the primary columbium-tantalum subcategory requires treatment technologies to reduce pollutant mass. The Option A treatment scheme consists of ammonia steam stripping preliminary treatment applied to the combined streams of precipitation and filtration of metal salts wastewater, precipitation and filtration wet air pollution control, and oxides calcining wet air pollution control. Preliminary treatment is followed by lime precipitation and sedimentation applied to the combined stream of steam stripper effluent and the remaining wastewater sources. Chemical precipitation is used to remove metals and fluoride by the addition of lime followed by gravity sedimentation. Suspended solids are also removed from the process.

OPTION B

Option B for the primary columbium-tantalum subcategory consists of all treatment requirements of Option A (ammonia steam stripping, lime precipitation, and sedimentation) plus control technologies to reduce the discharge of wastewater volume. Water recycle and reuse are the principal control mechanisms for flow reduction.

OPTION C

Option C for the primary columbium-tantalum subcategory consists of all control and treatment requirements of Option B (ammonia steam stripping, in-process flow reduction, lime precipitation, and sedimentation) plus multimedia filtration technology added at

the end of the Option B treatment scheme. Multimedia filtration is used to remove suspended solids, including precipitates of metals, beyond the concentration attainable by gravity sedimentation. The filter suggested is of the gravity, mixed media type, although other forms of filters such as rapid sand filters or pressure filters would perform as well. The addition of filters also provides consistent removal during periods in which there are rapid increases in flows or loadings of pollutants to the treatment system.

CONTROL AND TREATMENT OPTIONS REJECTED

Three additional treatment technologies were considered prior to proposing mass limitations for this subcategory as discussed below. Activated alumina and reverse osmosis were rejected because they were not demonstrated in the nonferrous metals manufacturing category, nor were they readily transferable. Activated carbon adsorption treatment did not receive further consideration because the levels of toxic organics present in the primary columbium-tantalum subcategory are present only in trace (deminimus quantities) and are neither causing nor likely to cause toxic effects.

OPTION D

Option D for the primary columbium-tantalum subcategory consisted of Option C (ammonia steam stripping, in-process flow reduction, lime precipitation, sedimentation, and multimedia filtration) with the addition of activated alumina technology at the end of the Option C treatment scheme. The activated alumina process is used to remove dissolved fluoride which remains after lime precipitation.

OPTION E

Option E for the primary columbium-tantalum subcategory consisted of Option C (ammonia steam stripping, in-process flow reduction, lime precipitation, sedimentation, and multimedia filtration) with the addition of granular activated carbon technology at the end of the Option C treatment scheme. The activated carbon process is utilized to control the discharge of toxic organics.

OPTION F

Option F for the primary columbium-tantalum subcategory consisted of Option C (ammonia steam stripping, in-process flow reduction, lime precipitation, sedimentation, and multimedia filtration) with the addition of reverse osmosis and multiple-effect evaporation technologies at the end of the Option C treatment scheme. Option F is used for complete recycle of the treated water by controlling the concentration of dissolved solids.

THIS PAGE INTENTIONALLY LEFT BLANK

SECTION VIII

COSTS, ENERGY AND NONWATER QUALITY ASPECTS

This section describes the method used to develop the costs associated with the control and treatment technologies suggested in Section VII for wastewaters from primary columbium-tantalum plants. The energy consumption of each technology as well as solid waste and air pollution aspects are also discussed. Cost curves are presented in Section VIII of Vol. I showing the total annual cost of each treatment and control technology as a function of wastewater flow rate.

TREATMENT OPTIONS COSTED FOR EXISTING SOURCES

Three control and treatment options are considered for treating wastewater from the primary columbium-tantalum subcategory. Cost estimates have been developed for each of the control and treatment options. The options are summarized below and presented schematically in Figures X-1 through X-3 (pages 4494 - 4496).

OPTION A

Option A for the primary columbium-tantalum subcategory consists of lime precipitation and sedimentation end-of-pipe technology, with ammonia steam stripping preliminary treatment for waste streams containing treatable concentrations of ammonia. Streams with treatable concentrations of ammonia include precipitation and filtration of metal salts wastewater, precipitation and filtration scrubber water, and oxides calcining scrubber water.

OPTION B

Option B for the primary columbium-tantalum subcategory requires control and treatment technologies to reduce the discharge of wastewater volume and pollutant mass. The recycle of metal salt drying scrubber water, concentrate digestion scrubber, and solvent extraction scrubber water through holding tanks is the control mechanism for flow reduction. The Option B treatment scheme consists of ammonia steam stripping preliminary treatment for streams containing treatable concentrations of ammonia, and end-of-pipe treatment technology consists of lime precipitation and sedimentation.

OPTION C

Option C consists of all the control and treatment technologies of Option B (flow reduction, ammonia steam stripping, lime precipitation, and sedimentation) with the addition of multimedia filtration to the end-of-pipe treatment scheme.

COST METHODOLOGY

A detailed discussion of the methodology used to develop the compliance costs is presented in Section VIII of the General Development Document. Plant-by-plant compliance costs have been estimated for the nonferrous metal manufacturing category and are presented in the administrative record supporting this regulation. A comparison of the developed costs for proposal and the revised costs for the final regulation are presented in Tables VIII-1 and VIII-2 (pages 4452 and 4453) for the direct and indirect dischargers, respectively.

Each of the major assumptions used to develop compliance costs is presented in Section VIII of the General Development Document. However, each subcategory contains a unique set of waste streams requiring certain subcategory-specific assumptions to develop compliance costs. Seven major assumptions are discussed briefly below.

(1) Several plants utilized sodium hydroxide addition for wastewater treatment. This type of treatment is not considered to be equivalent to lime addition due to the need to remove fluoride in the wastewater as calcium fluoride. The Agency therefore included compliance costs for treating with lime for these plants.

(2) Ammonia steam stripping requirements may exceed the excess steam generation capacity at any given plant. Therefore, a steam generation unit is included in the steam stripping costs.

(3) Due to the large volume of wastewater treatment sludge generated by some plants in this subcategory, the costs of developing and maintaining nonhazardous sludge disposal sites are used instead of the normal contract hauling.

(4) EPA included the cost of segregation and treatment for one plant that currently commingles its wastewater and gangue. These costs eliminate any conceivable need for sludge disposal as a radioactive waste.

(5) Recycle of air pollution scrubber liquor is based on recycle through a holding tank after lime and settle treatment. Annual costs associated with maintenance are included in the estimated compliance costs. If a plant currently recycles scrubber liquor, capital costs of the recycle equipment (holding tank, pumps, and piping) are not included in the compliance costs.

(6) Subsequent to proposal, one columbium-tantalum plant commented that the selected lime and settle technology could not be installed on-site because of land limitations. Specifically, a clarifier of sufficient size could not fit within the available space at the plant. However, through Section 308 requests and telephone contacts, the Agency has determined that the clarifier could be installed at the

existing plant site. (This determination is documented in the administrative record supporting this regulation). Costs for the treatment technology were developed for this plant assuming a clarifier of sufficient size could be used.

(7) Annual costs for operation and maintenance of wastewater treatment systems are included in compliance costs for plants with treatment in place because there are no previous BPT or BAT regulations promulgated which account for these costs.

NONWATER QUALITY ASPECTS

A general discussion of the nonwater quality aspects of the control and treatment options considered for the nonferrous metals category is contained in Section VIII of the General Development Document. Nonwater quality impacts specific to the primary columbium-tantalum subcategory, including energy requirements, solid waste and air pollution are discussed below.

ENERGY REQUIREMENTS

Energy requirements for the three options considered are estimated at 5.22 mwh/yr, 5.22 mwh/yr, and 5.27 mwh/yr for Options A, B, and C respectively. Option C would increase energy requirements over Option A by approximately one percent. Option C represents roughly one percent of a typical plant's electrical usage. It is therefore concluded that the energy requirements of the treatment options considered will have no significant impact on total plant energy consumption.

SOLID WASTE

Sludges associated with the primary columbium-tantalum subcategory will necessarily contain additional quantities (and concentrations) of toxic metal pollutants. Wastes generated by primary smelters and refiners are currently exempt from regulation by Act of Congress (Resource Conservation and Recovery Act (RCRA)), Section 3001(b). Consequently, sludges generated from treating primary industries' wastewater are not presently subject to regulation as hazardous wastes.

Sludge generation in the primary columbium-tantalum subcategory is due to the precipitation of metal hydroxides and carbonates along with calcium fluoride using lime. If a small excess of lime is added during treatment, the Agency does not believe these sludges would be identified as hazardous under RCRA.

The Agency received comments stating that wastewater treatment sludges generated in the primary columbium-tantalum subcategory would have to be disposed of as low level radioactive waste. There are no RCRA regulations applicable to low level radioactive wastes, so the claim appears exaggerated. The Agency, therefore, requested specific data and information from the commenters so

that the comments could be properly evaluated. However, no data or information were submitted to support this claim. In fact, one commenter submitted information and data showing the cost of disposal for gangue, the waste material remaining after the columbium-tantalum values are extracted from the raw material, rather than for wastewater treatment sludge. In any case, the Agency believes the disposal of gangue as a low level radioactive material is an expense of doing business and not attributable to the treatment of wastewaters.

Commenters in the secondary aluminum subcategory claim stripped ammonia will have to be disposed of as corrosive hazardous waste. The Agency does not agree with the commenters because ammonia has an intrinsic value. In the columbium-tantalum subcategory, ammonia is a process chemical and may be reused as a precipitating agent.

Although it is the Agency's view that solid wastes generated as a result of these guidelines are not expected to be hazardous, generators of these wastes must test the waste to determine if the wastes meet any of the characteristics of hazardous waste (see 40 CFR 262.11).

If these wastes should be identified or are listed as hazardous, they will come within the scope of RCRA's "cradle to grave" hazardous waste management program, requiring regulation from the point of generation to point of final disposition. EPA's generator standards would require generators of hazardous nonferrous metals manufacturing wastes to meet containerization, labeling, recordkeeping, and reporting requirements; if plants dispose of hazardous wastes off-site, they would have to prepare a manifest which would track the movement of the wastes from the generator's premises to a permitted off-site treatment, storage, or disposal facility. See 40 CFR 262.20 45 FR 33142 (May 19, 1980), as amended at 45 FR 86973 (December 31, 1980). The transporter regulations require transporters of hazardous wastes to comply with the manifest system to assure that the wastes are delivered to a permitted facility. See 40 CFR 263.20 45 FR 33151 (May 19, 1980), as amended at 45 FR 86973 (December 31, 1980). Finally, RCRA regulations establish standards for hazardous waste treatment, storage, and disposal facilities allowed to receive such wastes. See 40 CFR Part 464 46 FR 2802 (January 12, 1981), 47 FR 32274 (July 26, 1982).

Even if these wastes are not identified as hazardous, they still must be disposed of in compliance with the Subtitle D open dumping standards, implementing 4004 of RCRA. See 44 FR 53438 (September 13, 1979). The Agency has calculated as part of the costs for wastewater treatment the cost of hauling and disposing of these wastes. EPA estimates implementation of lime, settle, and filter technology will produce approximately 25,000 tons per year of sludge at 20 percent solids. Multimedia filtration technology will not result in any significant amount of sludge over that generated by lime precipitation.

AIR POLLUTION

There is no reason to believe that any substantial air pollution problems will result from implementation of chemical precipitation, sedimentation, and multimedia filtration. These technologies transfer pollutants to solid waste and do not involve air stripping or any other physical process likely to transfer pollutants to air.

Table VIII-1

COST OF COMPLIANCE FOR THE COLUMBIUM-TANTALUM SUBCATEGORY
DIRECT DISCHARGERS

(March 1982 Dollars)

	Proposal Costs		Promulgation Costs	
Option	Capital Cost	Annual Cost	Capital Cost	Annual Cost
A	0	0	680,000	1,139,000
B	117,000	18,000	736,000	1,157,000
C	1,083,000	538,000	830,000	1,202,000

Table VIII-2

COST OF COMPLIANCE FOR THE COLUMBIUM-TANTALUM SUBCATEGORY
INDIRECT DISCHARGERS

(March 1982 Dollars)

	Proposal Costs		Promulgation Costs	
Option	Capital Cost	Annual Cost	Capital Cost	Annual Cost
A	408,000	207,000	951,000	667,000
B	627,000	238,000	979,000	674,000
C	2,977,000	1,835,000	1,035,000	701,000

THIS PAGE INTENTIONALLY LEFT BLANK

SECTION IX

BEST PRACTICABLE CONTROL TECHNOLOGY CURRENTLY AVAILABLE

This section defines the effluent characteristics attainable through the application of best practicable control technology currently available (BPT), BPT reflects the existing performance by plants of various sizes, ages, and manufacturing processes within the primary columbium-tantalum subcategory, as well as the established performance of the recommended BPT systems. Particular consideration is given to the treatment already in place at plants within the data base.

The factors considered in identifying BPT include the total cost of applying the technology in relation to the effluent reduction benefits from such application, the age of equipment and facilities involved, the manufacturing processes used, nonwater quality environmental impacts (including energy requirements), and other factors the Administrator considers appropriate. In general, the BPT level represents the average of the existing performances of plants of various ages, sizes, processes, or other common characteristics. Where existing performance is uniformly inadequate, BPT may be transferred from a different subcategory or category. Limitations based on transfer of technology are supported by a rationale concluding that the technology is, indeed, transferable, and a reasonable prediction that it will be capable of achieving the prescribed effluent limits. BPT focuses on end-of-pipe treatment rather than process changes or internal controls, except where such practices are common industry practice.

TECHNICAL APPROACH TO BPT

The Agency studied the nonferrous metals category to identify the processes used, the wastewaters generated, and the treatment processes installed. Information was collected from the category using data collection portfolios, and specific plants were sampled and the wastewaters analyzed. Additional data used in the final rule were obtained through comments and Section 308 requests. Some of the factors which must be considered in establishing effluent limitations based on BPT have already been discussed. The age of equipment and facilities, processes used, and raw materials were taken into account in subcategorization and subdivision and are discussed fully in Section IV. Nonwater quality impacts and energy requirements are considered in Section VIII.

As explained in Section IV, the primary columbium-tantalum subcategory has been subdivided into 11 potential wastewater sources. Since the water use, discharge rates, and pollutant characteristics of each of these wastewaters is potentially unique, effluent limitations will be developed for each of the 11 subdivisions.

For each of the subdivisions, a specific approach was followed for the development of BPT mass limitations. To account for production and flow variability from plant to plant, a unit of production or production normalizing parameter (PNP) was determined for each waste stream which could then be related to the flow from the process to determine a production normalized flow. Selection of the PNP for each process element is discussed in Section IV. Each process within the subcategory was then analyzed to determine (1) whether or not operations included generated wastewater, (2) specific flow rates generated, and (3) the specific production normalized flows for each process. This analysis is discussed in detail in Section V. Nonprocess wastewater such as rainfall runoff and noncontact cooling water is not considered in the analysis.

Normalized flows were analyzed to determine which flow was to be used as part of the basis for BPT mass limitations. The selected flow (sometimes referred to as a BPT regulatory flow or BPT discharge rate) reflects the water use controls which are common practices within the category. The BPT normalized flow is based on the average of all applicable data. Plants with normalized flows above the average may have to implement some method of flow reduction to achieve the BPT limitations.

For the development of effluent limitations, mass limitations were calculated for each wastewater source or subdivision. This calculation was made on a stream-by-stream basis, primarily because plants in this subcategory may perform one or more of the operations in various combinations. The mass limitations (milligrams of pollutant per kilogram of production unit - mg/kg) were calculated by multiplying the BPT normalized flow (l/kkg) by the concentration achievable using the BPT treatment system (mg/l) for each pollutant parameter to be limited under BPT.

The mass limitations which are allowed under BPT for each plant will be the sum of the individual mass loadings for the various wastewater sources which are found at particular plants. Accordingly, all the wastewater generated within a plant may be combined for treatment in a single or common treatment system, but the effluent limitations for these combined wastewaters are based on the various wastewater sources which actually contribute to the combined flow. This method accounts for the variety of combinations of wastewater sources and production processes which may be found at primary columbium-tantalum plants.

The Agency usually establishes wastewater limitations in terms of mass rather than concentration. This approach prevents the use of dilution as a treatment method (except for controlling pH). The production normalized wastewater flow (l/kkg) is a link between the production operations and the effluent limitations. The pollutant discharge attributable to each operation can be calculated from the normalized flow and effluent concentration achievable by the treatment technology and summed to derive an appropriate limitation for each subcategory.

BPT effluent limitations are based on the average of the discharge flow rates for each source; consequently, the treatment technologies which are currently used by the lowest dischargers will be the treatment technologies most likely required to meet BPT effluent limitations. Section VII discusses the various treatment technologies which are currently in place for each wastewater source. In most cases, the current treatment technologies consist of chemical precipitation and sedimentation (lime and settle technology) and a combination of reuse and recycle to reduce flow. Ammonia steam stripping is added to streams with treatable concentrations of ammonia.

The overall effectiveness of end-of-pipe treatment for the removal of wastewater pollutants is improved by the application of water flow controls within the process to limit the volume of wastewater requiring treatment. The controls or in-process technologies recommended under BPT include only those measures which are commonly practiced within the subcategory and which reduce flows to meet the production normalized flow for each operation.

In making technical assessments of data, reviewing manufacturing processes, and assessing wastewater treatment technology options, both indirect and direct dischargers have been considered as a single group. An examination of plants and processes did not indicate any process differences based on the type of discharge, whether it be direct or indirect.

INDUSTRY COST AND POLLUTANT REMOVAL ESTIMATES

In balancing costs in relation to pollutant removal estimates, EPA considers the volume and nature of existing discharges, the volume and nature of discharges expected after application of BPT, the general environmental effects of the pollutants, and the cost and economic impacts of the required pollution control level. The Act does not require or permit consideration of water quality problems attributable to particular point sources or industries, or water quality improvements in particular water quality bodies. Accordingly, water quality considerations were not the basis for selecting the promulgated BPT.

The methodology for calculating pollutant removal estimates and plant compliance costs is discussed in Section X. Table X-2 (page 4485) shows the estimated pollutant removal estimates for each treatment option for direct dischargers. Compliance costs for direct dischargers are presented in Table VIII-1 (page 4452).

BPT OPTION SELECTION

The BPT selected consists of chemical precipitation and sedimentation (lime and settle technology) with ammonia steam stripping preliminary treatment of wastewaters containing treatable concentrations of ammonia. The best practicable

technology is presented in Figure IX-1 (page 4472). The BPT treatment is equivalent to Option A described in Section VII and does not differ from that proposed. Lime and settle technology is currently demonstrated by all three primary columbium-tantalum direct dischargers.

Ammonia steam stripping is demonstrated in the nonferrous metals manufacturing category and at two primary columbium-tantalum facilities. EPA proposed treatment performance concentrations based on levels achieved in the iron and steel manufacturing category.

Chemical analysis data were collected of raw waste (treatment influent) and treated waste (treatment effluent) from one coke plant of the iron and steel manufacturing category. A contractor for EPA, using EPA sampling and chemical analysis protocols, collected six paired samples in a two-month period. These data are the data base for determining the effectiveness of ammonia steam stripping technology and are contained within the administrative record supporting this document. Ammonia treatment at this coke plant consisted of two steam stripping columns in series with steam injected countercurrently to the flow of the wastewater. A lime reactor for pH adjustment separated the two stripping columns.

The raw untreated wastewater samples from the coke facility contained ammonia concentrations of 599, 226, 819, 502, 984, and 797 mg/l. Raw untreated wastewater samples from the primary columbium-tantalum subcategory contained ammonia concentrations of 53.1 , 496.1, 25,700, 18,500, and 16,900 mg/l. These latter three concentrations represent three days of sampling from a calciner scrubber.

The Agency has verified the proposed steam stripping performance values using steam stripping data collected at a zirconium-hafnium plant in the nonferrous metals manufacturing category. Data collected by the plant represent almost two years of daily operations and support the long-term mean and variability used to establish treatment effectiveness. Although the ammonia concentrations in columbium-tantalum wastewater are higher than those in iron and steel wastewater, the columbium-tantalum ammonia data are comparable to raw wastewater data from this zirconium-hafnium plant.

The Agency has chosen not to regulate toxic organic pollutant parameters on a subcategory-wide basis for the primary columbium-tantalum subcategory. Primary columbium-tantalum plants may use an organic solvent in a liquid-liquid ion exchange process to extract columbium-tantalum from digested concentrates. In the pollutant reduction removals prior to proposal, it was estimated that the subcategory generates 170 kg/yr toxic organic pollutants. The Agency believes the toxic organic pollutants in the primary columbium-tantalum subcategory are present only in trace amounts and thus are not regulated on a subcategory-wide basis. However, it is possible toxic organic pollutants may be

present in larger concentrations at an individual plant than the Agency sampling data indicate. Therefore, the permitting or control authority should check for the presence of toxic organic pollutants on a case-by-case basis and determine if they require treatment.

The Agency has re-evaluated lime and settle technology performance for fluoride removal. The proposed treatment performance for fluoride was transferred from the electrical and electronic component manufacturing (phase I) lime and settle mean performance. Commenters urged the Agency to transfer treatability values from the inorganic chemical industry instead. The Agency disagrees. The Agency believes the electronics data base more closely reflects the treatability of fluoride in nonferrous metals manufacturing wastewaters because of the type of fluoride present. The fluoride present in inorganic chemicals manufacturing (hydrofluoric acid production) exists as a complex fluoride mineral containing silicates and other compounds that complicate removal by lime precipitation. In nonferrous metals manufacturing and electronics, the fluoride disassociates in water to fluoride ion, which can be readily removed from solution by lime as calcium fluoride.

However, examination of the electronics data has led the Agency to conclude that the raw concentrations of fluoride in nonferrous metals manufacturing wastewaters more closely resemble the higher concentrations found in electrical and electronics phase II rather than phase I (49 FR 55690, December 14, 1983). Therefore, the Agency believes it is appropriate to use the mean performance and daily maximum variability developed for electronics phase II to establish treatment effectiveness for fluoride removal by lime and settle treatment.

BPT will result in the removal of an estimated 61,093 kg/yr of toxic pollutants, 1,692,000 kg/yr of conventional pollutants, 973,000 kg/yr of fluoride, and 941,000 kg/yr of ammonia from raw discharge levels. The estimated capital investment cost of BPT is $0.68 million (March, 1982 dollars) and the estimated annual cost is $1.1 million. These costs represent wastewater treatment equipment not currently in place.

WASTEWATER DISCHARGE RATES

A BPT discharge rate is calculated for each subdivision based on the average of the flows of the existing plants, as determined from analysis of dcp. The discharge rate is used with the achievable treatment concentration to determine BPT effluent limitations. Since the discharge rate may be different for each wastewater source, separate production normalized discharge rates for each of the 11 wastewater sources are discussed below and summarized in Table IX-1 (page 4465). The discharge rates are generally normalized on a production basis by relating the amount of wastewater generated to the mass of the intermediate product which is produced by the process associated with the waste stream in question. These production normalizing parameters, or PNPs,

are listed in Table IX-1 (page 4465).

Section V of this document further describes the discharge flow rates and presents the water use and discharge flow rates for each plant by subdivision.

CONCENTRATE DIGESTION WET AIR POLLUTION CONTROL

The proposed BPT wastewater discharge rate for concentrate digestion wet air pollution control was 10,915 l/kkg (2,618 gal/ton) of columbium-tantalum salt produced from digestion. This rate was allocated only for plants practicing wet air pollution control for concentrate digestion. Three plants reported wastewater discharges from concentrate digestion wet air pollution control, but dcp information provided by one plant was insufficient to calculate a discharge rate. Therefore, the BPT discharge rate was based on the average of two plants which discharged 8,692.4 and 13,135.5 l/kkg (2,084.5 and 3,150 gal/ton).

The proposed concentrate digestion wet air pollution control flow allowance has been revised based on new data and information received through comments and special information requests. It has been demonstrated to the Agency that water usage for concentrate digestion scrubbers correlates better with the mass of concentrate or slag digested than the product recovered from digestion. This is due to the different columbium-tantalum values contained in ore concentrates and tin slags. A plant processing tin slags, which contain much less columbium-tantalum than ore concentrates, would digest much more raw material than a plant using ore concentrates to recover equal amounts of columbium-tantalum. Therefore, the Agency has changed the production normalizing parameter from columbium-tantalum salt recovered to the mass of raw material digested.

There are three values available from which to determine the discharge rate as shown in Table V-1 (page 4372). Plant 519 will not be used because it scrubs air emissions from digestion and solvent extraction. Water use in fume control is directly related to the volume of gas being scrubbed; consequently, plant 519 water usage may not be comparable to the other two plants. Water use at plant 509 will not be used because it discharges 16 more times water (on a production normalized basis) than plant 507. There is no engineering reason this discharge rate should be so high. The BAT discharge rate is thus set equal to the demonstrated rate at plant 507, or 6,219 l/kkg (1,491 gal/ton) of raw material digested.

SOLVENT EXTRACTION RAFFINATE

The proposal BPT wastewater discharge rate for solvent extraction raffinate was 26,916 l/kkg (6,470.4 gal/ton) of columbium or tantalum salt extracted. This rate was based on the average discharge rate of two plants, which discharged 19,268 and 34,694 l/kkg (4,620 and 8,320 gal/ton). A third plant reported

insufficient data to calculate a discharge rate.

The proposal solvent extraction raffinate flow allowance has been revised based on new data and information received through comments and specific requests for information. As with concentrate digestion wet air pollution control, it has been demonstrated to the Agency water usage correlates better with the mass of concentrate or slag digested than the product recovered from solvent extraction. The production normalized discharge flows for plants 507 and 509 changed from proposal because of this change in production normalizing parameter. Plant 509 submitted data in response to a request, allowing a discharge flow to be calculated. Water usage rates for solvent extraction, production normalized with the mass of raw material digested, are presented in Table V-3. The promulgated discharge rate is based on the average of the three values, or 9,155 l/kkg (2,195 gal/ton) of raw material digested.

SOLVENT EXTRACTION WET AIR POLLUTION CONTROL

The proposal BPT discharge rate for solvent extraction wet air pollution control was 4,301 l/kkg (1,034 gal/ton) of columbium or tantalum salt extracted. This rate was allocated only for plants practicing wet air pollution control for solvent extraction. Two plants reported this wastewater, however, one plant uses the same scrubber for both solvent extraction and concentrate digestion wet air pollution control. The BPT discharge rate was based on the discharge of the single plant which only scrubbed emissions from solvent extraction.

As with concentrate digestion wet air pollution control, the discharge rate for solvent extraction raffinate wet air pollution control has been revised. Water use and discharge rates for this stream are presented in Table V-5. Plant 519 was not considered in the determination of the BPT discharge rate because it uses the same scrubber to control emissions from concentrate digestion. Water use for this scrubber is expected to be larger because of the added volume of gas scrubbed versus that for plant 507. The BPT discharge rate is set equal to the discharge rate at plant 507 of 2,456 l/kkg (589 gal/ton) of raw material digested. Plant 519, however, should receive both the concentrate digestion and solvent extraction wet air pollution control flow allowance.

PRECIPITATION AND FILTRATION OF METAL SALTS

The proposal BPT wastewater discharge rate for precipitation and filtration waste streams was 247,223 l/kkg (59,428 gal/ton) of columbium or tantalum salt precipitated. Three plants reported producing this waste stream. The BPT discharge rate was based on the discharge rate of one of the plants. The two other plants reported insufficient data to calculate a discharge rate.

Data and information were received through comments and specific requests for additional information so that production normalized

flows are available for three plants. Table V-7 (page 4387) presents production normalized discharges for the three plants. The production normalizing parameter for precipitation and filtration has also been changed to the mass of raw material digested rather than the columbium-tantalum recovered through precipitation. Water discharge and production were found to correlate much better with the mass of raw material used as the production normalizing parameter. The BPT discharge rate is determined from the average of the three reported values, or 13,689 l/kkg (3,283 gal/ton) of raw material digested.

PRECIPITATION AND FILTRATION WET AIR POLLUTION CONTROL

A discharge allowance for precipitation and filtration wet air pollution control has been added to cover wastewater generated from fume scrubbing during precipitation. This wastewater stream was not considered at proposal. Two plants reportedly operate this scrubber as shown in Table V-9 (page 4391). The BPT discharge is the average discharge rate of these two plants, or 63,513 l/kkg (15,231 gal/ ton) of raw material digested.

TANTALUM SALT DRYING WET AIR POLLUTION CONTROL

The proposal BPT wastewater discharge rate for metal salt drying wet air pollution control was 83,643 l/kkg (20,106 gal/ton) of columbium or tantalum salt dried. This rate was allocated only for plants practicing wet air pollution control for metal salt drying emissions. Four plants discharged a metal salt drying wet air pollution control waste stream. Two plants discharging this waste stream reported sufficient dcp information to calculate a discharge rate. The two plants generated 11,563 and 156,125 l/kkg (2,773 and 37,440 gal/ton) respectively, of metal salt drying wet air pollution wastewater. The BPT discharge rate was the average discharge rate of these two plants.

Based on the information obtained through comments and special requests for additional information, the proposed metal salt drying scrubber allowance has been divided into tantalum salt drying and oxides calcining wet air pollution control. Two plants reported capturing steam generated during tantalum salt drying. One of these plants reported its data in conjunction with oxides calcining wet air pollution control, and the data cannot be separated. Therefore, the discharge rate is set equal to one reported value of 60,542 l/kkg (14,518 gal/ton) of tantalum salt dried.

OXIDES CALCINING WET AIR POLLUTION CONTROL

A separate flow allowance is established for the calcining operations used to dry columbium-tantalum pentoxide. Four plants reported using a scrubber to control emissions from this operation as shown in Table V-11 (page 4393). One plant currently recycles at an 89 percent rate, one plant reported using treated effluent as scrubber liquor make-up (therefore 100 percent recycle), and two plants reported using once-through

systems. The BPT discharge is based on the average water use at plants 4225, 509, and 507. This value is 38,422 l/kkg (9,214 gal/ton) of oxide production from calcining.

REDUCTION OF TANTALUM SALT TO METAL

The proposal BPT wastewater discharge rate for reduction of salt to metal was 352,663 l/kkg (84,775 gal/ton) of columbium or tantalum reduced. This rate was based on the average discharge rate of two plants, which discharged 170,740 and 536,282 l/kkg (40,945 and 128,605 gal/ton). A third plant reported insufficient dcp information to calculate a discharge rate.

Based on a re-evaluation of data from dcp and trip reports available to the Agency before proposal, discharge rates are now available for three plants as shown in Table V-13 (page 4400). The BPT discharge is thus chosen as the average discharge rate, or 166,071 l/kkg (39,825 gal/ton) of salt produced. Two of the plants currently meet this discharge rate.

REDUCTION OF TANTALUM SALT TO METAL WET AIR POLLUTION CONTROL

The proposal BPT wastewater discharge rate for reduction of salt to metal wet air pollution control was 21,521 l/kkg (5,173 gal/ ton) of columbium or tantalum reduced. This rate was allocated only for those plants practicing wet air pollution control for reduction emissions. The BPT discharge rate was based on the average discharge rate of the two plants reporting this wastewater. The two plants generated 2,168 and 40,978 l/kkg (520 and 9,827 gal/ton) respectively, of this wastewater.

No new information has been received on reduction of salt to metal wet air pollution control; however, this discharge allowance was re-evaluated to try to determine any reasons for the large variation in water usage. Both plants have similar reduction operations and both use rotoclone type scrubbers. Information available to the Agency does not suggest any reason for such a large variation in production normalized water usage. There fore, the BPT discharge is based on plant 519, which reports 19 times less water than plant 513. Thus, the BPT discharge rate is 2,043 l/kkg (490 gal/ton) of tantalum salt produced.

TANTALUM POWDER WASH AND SCRUBBER

A discharge allowance for tantalum powder wash and scrubber has been added to cover wastewater generated from tantalum powder washing after reduction. Only one plant reported this waste stream and the BPT discharge is set equal to the current discharge practices at this plant of 20,433 l/kkg (4,900 gal/ton) of tantalum powder washed. Flow data could not be separated from the scrubber and washing operation.

CONSOLIDATION AND CASTING CONTACT COOLING

No BPT wastewater discharge allowance was proposed for consolidation and casting contact cooling and no comments or data were received indicating a discharge allowance is warranted. Only one plant in this subcategory reported a consolidation and casting contact cooling waste stream. This plant does not discharge this wastewater. BPT is based on this plant.

REGULATED POLLUTANT PARAMETERS

The raw wastewater concentrations from individual operations and the subcategory as a whole were examined to select certain pollutant parameters for limitation. This examination and evaluation was presented in Section VI. A total of six pollutants or pollutant parameters were selected for limitation and are listed below:

122. lead
128. zinc
ammonia
fluoride
total suspended solids
pH

EFFLUENT LIMITATIONS

The treatment effectiveness achievable by application of the proposed BPT treatment are explained in Section VII of Vol. I and summarized there in Table VII-21 (page 248). The achievable treatment concentrations (both one day maximum and monthly average values) are multiplied by the BPT normalized discharge flows summarized in Table IX-1 (page 4465) to calculate the mass of pollutants allowed to be discharged per mass of product. The results of these calculations in milligrams of pollutant per kilogram of product represent the BPT effluent limitations and are presented in Table IX-2 (page 4467) for each individual waste stream.

Table IX-1

BPT WASTEWATER DISCHARGE RATES FOR THE PRIMARY COLUMBIUM-TANTALUM SUBCATEGORY

Wastewater Stream	BPT Normalized Discharge Rate l/kkg	BPT Normalized Discharge Rate gal/ton	Production Normalizing Parameter
Concentrate Digestion Wet Air Pollution Control	6,219	1,491	Concentrate Digested
Solvent Extraction Raffinate	9,155	2,195	Concentrate Digested
Solvent Extraction Wet Air Pollution Control	2,456	589	Concentrate Digested
Precipitation and Filtration Wastewater	13,689	3,283	Concentrate Digested
Precipitation and Filtration Wet Air Pollution Control	63,513	15,231	Concentrate Digested
Tantalum Salt Drying	60,542	14,518	Tantalum Salt Dried
Oxides Calcining Wet Air Pollution Control	38,422	9,214	Columbium or Tantalum Oxide Calcined
Reduction of Tantalum Salt to Metal	166,071	39,825	Tantalum Salt Reduced
Reduction of Tantalum Salt Metal Wet Air Pollution Control	2,043	490	Tantalum Salt Reduced

Table IX-1 (Continued)

BPT WASTEWATER DISCHARGE RATES FOR THE PRIMARY COLUMBIUM-TANTALUM SUBCATEGORY

Wastewater Stream	BPT Normalized Discharge Rate l/kkg	BPT Normalized Discharge Rate gal/ton	Production Normalizing Parameter
Tantalum Powder Wash and Scrubber	20,433	4,900	Tantalum Washed
Consolidation and Casting Contact Cooling	0	0	Columbium or Tantalum Cast or Consolidated

TABLE IX-2

BPT EFFLUENT LIMITATIONS FOR THE
PRIMARY COLUMBIUM-TANTALUM SUBCATEGORY

(a) Concentrate Digestion Wet Air Pollution Control BPT

Pollutant or Pollutant Property	Maximum for Any One Day	Maximum for Monthly Average
Metric Units - mg/kg of concentrate digested English Units - lbs/million lbs of concentrate digested		
Antimony	17,850	7.960
Arsenic	13.000	5.784
Cadmium	2.114	0.933
Chromium	2.736	1.119
Copper	11.820	6.219
*Lead	2.612	1.244
Nickel	11.940	7.898
Selenium	7.649	3.420
Thallium	12.750	5.659
*Zinc	9.080	3.794
*Ammonia (as N)	829.000	364.500
*Fluoride	217.700	124.400
*TSS	255.000	121.300
*pH	Within the range of 7.0 to 10.0 at all times	

(b) Solvent Extraction Raffinate BPT

Pollutant or Pollutant Property	Maximum for Any One Day	Maximum for Monthly Average
Metric Units - mg/kg of concentrate digested English Units - lbs/million lbs of concentrate digested		
Antimony	26.280	11.720
Arsenic	19.130	8.524
Cadmium	3.113	1.373
Chromium	4.028	1.648
Copper	17.400	9.155
*Lead	3.845	1.831
Nickel	11.580	11.630
Selenium	11.260	5.035
Thallium	18.770	8.331
*Zinc	13.370	5.585
*Ammonia (as N)	1,221.000	536.500
*Fluoride	320.400	183.100
*TSS	375.400	178.500
*pH	Within the range of 7.0 to 10.0 at all times	

TABLE IX-2 (Continued)

BPT EFFLUENT LIMITATIONS FOR THE
PRIMARY COLUMBIUM-TANTALUM SUBCATEGORY

(c) Solvent Extraction Wet Air Pollution Control BPT

Pollutant or Pollutant Property	Maximum for Any One Day	Maximum for Monthly Average
Metric Units - mg/kg of concentrate digested English Units - lbs/million lbs of concentrate digested		
Antimony	7.049	3.144
Arsenic	5.133	2.284
Cadmium	0.835	0.368
Chromium	1.081	0.422
Copper	4.666	2.456
*Lead	1.032	0.491
Nickel	4.716	3.119
Selenium	3.021	1.351
Thallium	5.035	2.235
*Zinc	3.586	1.498
*Ammonia (as N)	327.400	143.900
*Fluoride	85.960	49.120
*TSS	100.700	47.890
*pH	Within the range of 7.0 to 10.0 at all times	

(d) Precipitation and Filtration BPT

Pollutant or Pollutant Property	Maximum for Any One Day	Maximum for Monthly Average
Metric Units - mg/kg of concentrate digested English Units - lbs/million lbs of concentrate digested		
Antimony	39.290	17.530
Arsenic	28.610	12.730
Cadmium	4.654	2.053
Chromium	6.023	2.464
Copper	26.010	13.690
*Lead	5.570	2.733
Nickel	26.010	13.690
Selenium	16.840	7.529
Thallium	28.060	12.460
*Zinc	19.990	8.350
*Ammonia (as N)	1,825.000	802.200
*Fluoride	479.100	273.800
*TSS	561.300	267.000
*pH	Within the range of 7.0 to 10.0 at all times	

TABLE IX-2 (Continued)

BPT EFFLUENT LIMITATIONS FOR THE
PRIMARY COLUMBIUM-TANTALUM SUBCATEGORY

(e) Precipitation and Filtration Wet Air Pollution Control BPT

Pollutant or Pollutant Property	Maximum for Any One Day	Maximum for Monthly Average
Metric Units - mg/kg of concentrate digested English Units - lbs/million lbs of concentrate digested		
Antimony	182.300	81.300
Arsenic	132.700	59.070
Cadmium	21.590	9.527
Chromium	27.950	11.430
Copper	120.700	63.510
*Lead	26.680	12.700
Nickel	122.000	80.660
Selenium	78.120	34.930
Thallium	130.200	57.800
*Zinc	92.730	38.740
*Ammonia (as N)	8,466.000	3,722.000
*Fluoride	2,223.000	1,270.000
*TSS	2,604.000	1,239.000
*pH	Within the range of 7.0 to 10.0 at all times	

(f) Tantalum Salt Drying BPT

Pollutant or Pollutant Property	Maximum for Any One Day	Maximum for Monthly Average
Metric Units - mg/kg of tantalum salt dried English Units - lbs/million lbs of tantalum salt dried		
Antimony	173.800	77.490
Arsenic	126.500	56.300
Cadmium	29.580	9.081
Chromium	26.640	10.900
Copper	115.000	60.540
*Lead	25.430	12.110
Nickel	116.200	76.890
Selenium	74.470	33.300
Thallium	124.100	55.090
*Zinc	88.390	36.930
*Ammonia (as N)	8,070.000	3,548.000
*Fluoride	2,119.000	1,211.000
*TSS	2,482.000	1,181.000
*pH	Within the range of 7.0 to 10.0 at all times	

TABLE IX-2 (Continued)

BPT EFFLUENT LIMITATIONS FOR THE
PRIMARY COLUMBIUM-TANTALUM SUBCATEGORY

(g) Oxides Calcining Wet Air Pollution Control BPT

Pollutant or Pollutant Property	Maximum for Any One Day	Maximum for Monthly Average
Metric Units - mg/kg of columbium-tantalum oxide dried English Units - lbs/million lbs of columbium-tantalum oxide dried		
Antimony	110.300	49.180
Arsenic	89.300	35.730
Cadmium	13.060	5.763
Chromium	16.910	6.916
Copper	73.000	38.420
*Lead	16.140	7.685
Nickel	73,770	48.800
Selenium	47.260	21.130
Thallium	78.770	48.800
*Zinc	56.100	23.440
*Ammonia (as N)	5,122.000	2,252.000
*Fluoride	1,345.000	768.500
*TSS	1,576.000	749.200
*pH	Within the range of 7.0 to 10.0 at all times	

(h) Reduction of Tantalum Salt to Metal BPT

Pollutant or Pollutant Property	Maximum for Any One Day	Maximum for Monthly Average
Metric Units - mg/kg of tantalum salt reduced English Units - lbs/million lbs of tantalum salt reduced		
Antimony	476.600	212.600
Arsenic	347.100	154.140
Cadmium	56.460	24.910
Chromium	73.070	29.89
Copper	315.500	166.100
*Lead	69.750	33.220
Nickel	315.500	166.100
Selenium	69.750	33.210
Thallium	318.900	210.900
*Zinc	242.500	101.300
*Ammonia (as N)	22,140.000	9,732.000
*Fluoride	5,813.000	3,322.000
*TSS	6,809.000	3,239.000
*pH	Within the range of 7.0 to 10.0 at all times	

TABLE IX-2 (Continued)

BPT EFFLUENT LIMITATIONS FOR THE
PRIMARY COLUMBIUM-TANTALUM SUBCATEGORY

(i) Reduction of Tantalum Salt to Metal Wet Air Pollution Control BPT

Pollutant or Pollutant Property	Maximum for Any One Day	Maximum for Monthly Average
Metric Units - mg/kg of tantalum salt reduced English Units - lbs/million lbs of tantalum salt reduced		
Antimony	5.863	2.615
Arsenic	4.270	1.900
Cadmium	0.695	0.306
Chromium	0.899	0.368
Copper	3.882	2.043
*Lead	0.858	0.409
Nickel	3.958	2.595
Selenium	2.513	1.124
Thallium	4.188	1.859
*Zinc	2.983	1.246
*Ammonia (as N)	272.400	119.700
*Fluoride	71.510	40.860
*TSS	83.770	39.840
*pH	Within the range of 7.0 to 10.0 at all times	

(j) Tantalum Powder Wash BPT

Pollutant or Pollutant Property	Maximum for Any One Day	Maximum for Monthly Average
Metric Units - mg/kg of tantalum powder washed English Units - lbs/million lbs of tantalum powder washed		
Antimony	58.640	26.150
Arsenic	42.710	19.000
Cadmium	6.947	3.065
Chromium	8.991	3.678
Copper	38.820	20.430
*Lead	8.852	4.087
Nickel	39.230	25.950
Selenium	25.130	11.240
Thallium	41.890	18.600
*Zinc	29.830	12.470
*Ammonia (as N)	2,724.000	1,198.000
*Fluoride	715.200	408.700
*TSS	837.800	398.500
*pH	Within the range of 7.0 to 10.0 at all times	

TABLE IX-2 (Continued)

BPT EFFLUENT LIMITATIONS FOR THE
PRIMARY COLUMBIUM-TANTALUM SUBCATEGORY

(k) Consolidation and Casting Contact Cooling BPT

Pollutant or Pollutant Property	Maximum for Any One Day	Maximum for Monthly Average
Metric Units - mg/kg of columbium or tantalum cast or consolidated		
English Units - lbs/million lbs of columbium or tantalum cast or consolidated		
Antimony	0.000	0.000
Arsenic	0.000	0.000
Cadmium	0.000	0.000
Chromium	0.000	0.000
Copper	0.000	0.000
*Lead	0.000	0.000
Nickel	0.000	0.000
Selenium	0.000	0.000
Thallium	0.000	0.000
*Zinc	0.000	0.000
*Ammonia (as N)	0.000	0.000
*Fluoride	0.000	0.000
*TSS	0.000	0.000
*pH	Within the range of 7.0 to 10.0 at all times	

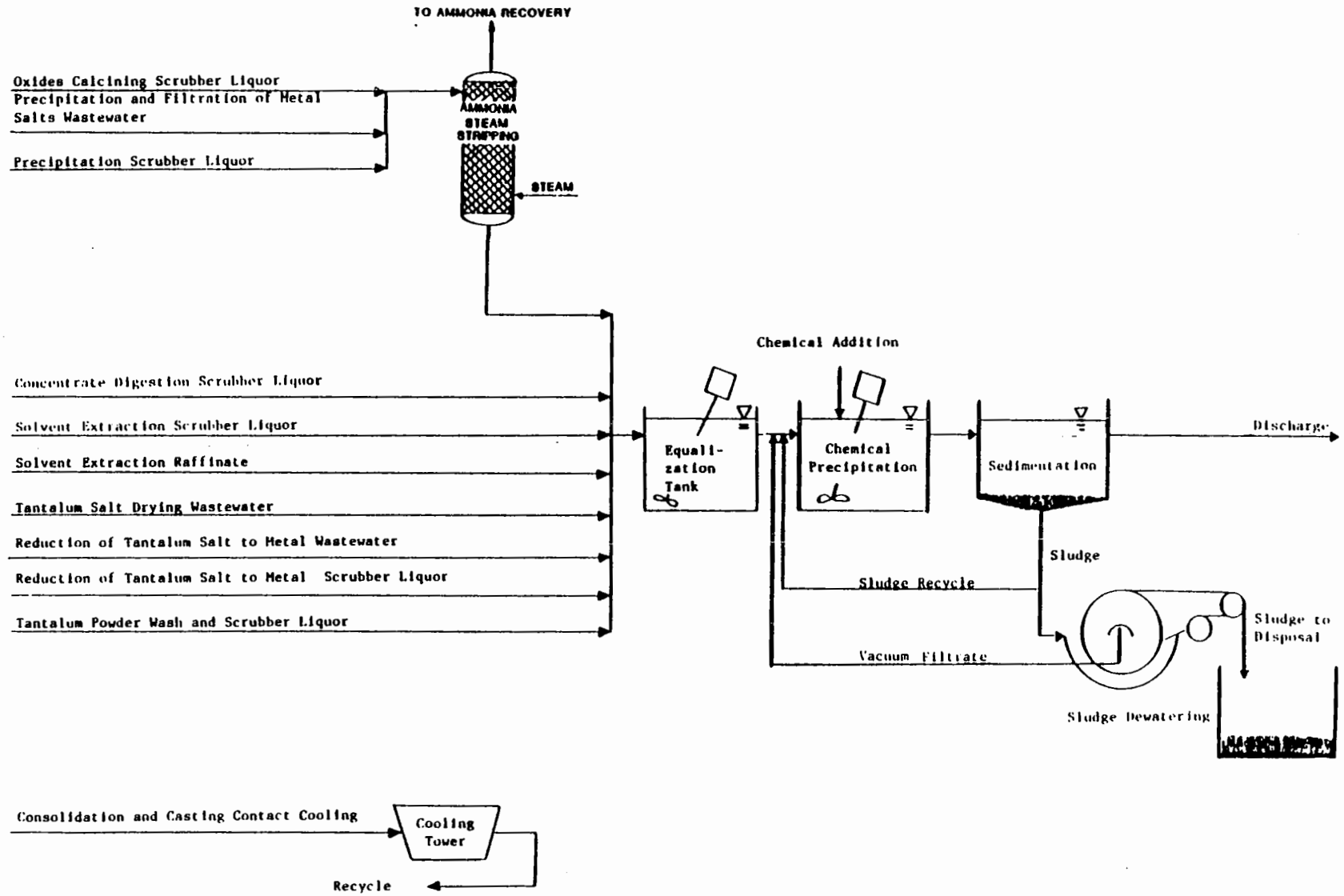

Figure IX-1

BPT TREATMENT SCHEME
PRIMARY COLUMBIUM-TANTALUM SUBCATEGORY

THIS PAGE INTENTIONALLY LEFT BLANK

SECTION X

BEST AVAILABLE TECHNOLOGY ECONOMICALLY ACHIEVABLE

These effluent limitations are based on the best control and treatment technology used by a specific point source within the industrial category or subcategory, or by another category where it is readily transferable. Emphasis is placed on additional treatment techniques applied at the end of the treatment systems currently used, as well as reduction of the amount of water used and discharged, process control, and treatment technology optimization.

The factors considered in assessing best available technology economically achievable (BAT) include the age of equipment and facilities involved, the process used, process changes, nonwater quality environmental impacts (including energy requirements), and the costs of application of such technology. At a minimum BAT technology represents the best available technology at plants of various ages, sizes, processes, or other characteristics. BAT may be transferred from a different subcategory or category. BAT may include feasible process changes or internal controls, even when not in common industry practice.

The statutory assessment of BAT considers costs, but does not require a balancing of costs against effluent reduction benefits However, in assessing BAT, the Agency has given substantial weight to the economic achievability of the selected technology.

TECHNICAL APPROACH TO BAT

The Agency reviewed a wide range of technology options and evaluated the available possibilities to ensure that the most effective and beneficial technologies were used as the basis of BAT. To accomplish this, the Agency elected to examine three technology options which could be applied to the primary columbium-tantalum subcategory as treatment options for the basis of BAT effluent limitations.

For the development of BAT effluent limitations, mass loadings were calculated for each wastewater source or subdivision in the subcategory using the same technical approach as described in Section IX for BPT limitations development. The differences in the mass loadings for BPT and BAT are due to increased treatment effectiveness achievable with the more sophisticated BAT treatment technology and reductions in the effluent flows allocated to various waste streams.

The treatment technologies considered for BAT are presented below:

Option A (Figure X-1, page 4494) is based on

- Preliminary treatment with ammonia steam stripping

- Chemical precipitation and sedimentation

Option B (Figure X-2, page 4495) is based on

- Preliminary treatment with ammonia steam stripping
- Chemical precipitation and sedimentation
- In-process flow reduction

Option C (Figure X-3, page 4496) is based on

- Preliminary treatment with ammonia steam stripping
- Chemical precipitation and sedimentation
- In-process flow reduction
- Multimedia filtration

The three options examined for BAT are discussed in greater detail below. The first option considered is the same as the BPT treatment which was presented in the previous section. The last two options represent substantial progress toward the prevention of polluting the environment above and beyond the progress achievable by BPT.

OPTION A

Option A for the primary columbium-tantalum subcategory is equivalent to the control and treatment technologies which were selected for BPT in Section IX. The BPT end-of-pipe treatment scheme includes lime precipitation, sedimentation, with ammonia steam stripping preliminary treatment (see Figure X-1). The discharge rates for Option A are equal to the discharge rates allocated to each stream as a BPT discharge flow.

OPTION B

Option B for the primary columbium-tantalum subcategory achieves lower pollutant discharge by building upon the Option A end-of-pipe treatment technology, which consists of ammonia steam stripping, lime precipitation, and sedimentation. Flow reduction measures are added to Option A treatment (see Figure X-2). These flow reduction measures result in the concentration of pollutants in scrubber liquor effluents. Treatment of a more concentrated effluent allows achievement of a greater net pollutant removal and introduces the possible economic benefits associated with treating a lower volume of wastewater.

Methods used in Option B to reduce process wastewater generation or discharge rates are presented below:

Recycle of Water Used in Wet Air Pollution Control

There are five wastewater sources associated with wet air pollution control which are regulated under these effluent limitations:

- o Concentrate digestion scrubber,
- o Solvent extraction scrubber,
- o Precipitation and filtration scrubber,
- o Oxides calcining drying scrubber, and
- o Reduction of salt to metal scrubber.

Table X-1 (page 4484) presents the number of plants reporting wastewater use with these sources, the number of plants practicing recycle of scrubber liquor, and the range of recycle values being used. Although some plants report total recycle of their scrubber water, some blowdown or periodic cleaning is likely to be needed to prevent the build-up of dissolved and suspended solids since the water picks up particulates and fumes from the air.

OPTION C

Option C for the primary columbium-tantalum subcategory consists of all control and treatment requirements of Option B (ammonia steam stripping, in-process flow reduction, lime precipitation, and sedimentation) plus multimedia filtration technology added at the end of the Option B treatment scheme (see Figure X-3). Multimedia filtration is used to remove suspended solids, including precipitates of toxic metals, beyond the concentrations attainable by gravity sedimentation. The filter suggested is of the gravity, mixed media type, although other filters, such as rapid sand filters or pressure filters, would perform as well.

As one means of evaluating each technology option, EPA developed estimates of the pollutant removal estimates and the compliance costs associated with each option. The methodologies are described below.

POLLUTANT REMOVAL ESTIMATES

A complete description of the methodology used to calculate the estimated pollutant reduction achieved by the application of the various treatment options is presented in Section X of the General Development Document. The pollutant removal estimates have been revised from proposal based on comments and new data. However, the methodology for calculating pollutant removals was not changed. The data used for estimating pollutant removals are the same as those used to revise the compliance costs.

Sampling data collected during the field sampling program were used to characterize the major waste streams considered for regulation. At each sampled facility, the sampling data were production normalized for each unit operation (i.e., mass of pollutant generated per mass of product manufactured). This value, referred to as the raw waste, was used to estimate the mass of toxic pollutants generated within the columbium-tantalum subcategory. By multiplying the total subcategory production for a unit operation by the corresponding raw waste value, the mass of pollutant generated for that unit operation was estimated.

The volume of wastewater discharged after the application of each treatment option was estimated for each operation at each plant by comparing the actual discharge to the regulatory flow. The smaller of the two values was selected and summed with the other plant flows. The mass of pollutant discharged was then estimated by multiplying the achievable concentration values attainable by the option (mg/l) by the estimated volume of process wastewater discharged by the subcategory. The mass of pollutant removed is simply the difference between the estimated mass of pollutant generated within the subcategory and the mass of pollutant discharged after application of the treatment option.

The pollutant removal estimates for the direct dischargers in the primary columbium-tantalum subcategory are presented in Table X-2 (page 4485).

COMPLIANCE COST

Compliance costs presented at proposal were estimated using cost curves, which related the total costs associated with installation and operation of wastewater treatment technologies to plant process wastewater discharge. EPA applied these curves on a per plant basis, a plant's costs -- both capital, and operating and maintenance -- being determined by what treatment it has in place and by its individual process wastewater discharge (from dcp). The final step was to annualize the capital costs, and to sum the annualized capital costs, and the operating and maintenance costs, yielding the cost of compliance for the subcategory.

Since proposal, the cost estimation methodology has been changed as discussed in Section VIII of Vol. I. A design model and plant specific information were used to size a wastewater treatment system for each discharging facility. After completion of the design, capital and annual costs were estimated for each unit of the wastewater treatment system. Capital costs rely on vendor quotes, while annual costs were developed from the literature. The revised compliance costs for direct dischargers are presented in Table VIII-1 (page 4452).

BAT OPTION SELECTION

For BAT, EPA is promulgating mass limitations based on lime precipitation and sedimentation with ammonia steam stripping with additional reduction in pollutant discharge achieved through inprocess wastewater flow reduction and the use of filtration as an effluent polishing step. The end-of-pipe and pretreatment technology basis for BAT limitations being promulgated is the same as that for the proposed limitations. Ammonia steam stripping is currently demonstrated at two columbium-tantalum facilities. Filtration is not demonstrated within this subcategory, but is transferred from six nonferrous metals subcategories where it is demonstrated in 23 plants. With the exception of limits for fluoride, the treatment performance

concentrations upon which the mass limitations are based are equal to the values used to calculate the proposed mass limitations. The mass limitations for fluoride have been revised for the reasons discussed in Section IX - BPT Option Selection.

Revision of the proposed flow allowances is consistent with the changes made for the promulgated BPT limitations. The differences between the promulgated BPT and BAT flow allowances are due to flow reduction of scrubber liquors at BAT. The BAT flow allowances are discussed in detail below.

EPA estimates that application of BAT will remove 61,400 kg/yr of toxic metals and 1,694,000 kg/yr of nonconventional pollutants over raw discharge rates. BAT will result in the estimated removal of 283 kg/yr of toxic pollutants and 1,980 kg/yr of nonconventional pollutants over the estimated BPT discharge. The final BAT effluent mass limitations will remove 57 kg/yr of toxic metals over the intermediate BAT option considered, which lacks filtration. Both options are economically achievable. The Agency believes that the incremental removal justifies selection of filtration as part of BAT model technology. The estimated capital investment cost of BAT is $0.83 million (March, 1982 dollars) and the estimated annual cost is $1.2 million.

WASTEWATER DISCHARGE RATES

A BAT discharge rate was calculated for each subdivision based upon the flows of the existing plants, as determined from analysis of dcp. The discharge rate is used with the achievable treatment concentration to determine BAT effluent limitations. Since the discharge rate may be different for each wastewater source, separate production normalized discharge rates for each of the 11 wastewater sources were determined and are summarized in Table X-3 (page 4486). The discharge rates are generally normalized on a production basis by relating the amount of wastewater generated to the mass of the intermediate product which is produced by the process associated with the waste stream in question. These production normalizing parameters (PNP) are also listed in Table X-3.

The BAT wastewater discharge rate equals the BPT wastewater discharge rate for seven of the 11 waste streams in the primary columbium-tantalum subcategory. Based on the available data, the Agency did not find that further flow reduction would be feasible for these wastewater sources. The rationale for determining these regulatory flows is presented in Section IX. Wastewater streams for which BAT discharge rates differ from BPT are discussed below.

CONCENTRATE DIGESTION WET AIR POLLUTION CONTROL

The proposed BAT wastewater discharge rate for concentrate digestion wet air pollution control was 5,156 l/kkg (1,237 gal/ton) of columbium-tantalum salt produced from digestion. The BAT discharge rate was based on 90 percent recycle of the average

water use of two plants. A third plant reported insufficient dcp information to calculate a discharge rate.

The proposed BAT discharge rate has been revised based on the considerations presented in Section IX of this document. The promulgated BAT discharge rate is based on 90 percent recycle of the BPT discharge rate, or 622 l/kkg (149 gal/ton) of raw material digested.

SOLVENT EXTRACTION WET AIR POLLUTION CONTROL

The proposed BAT wastewater discharge rate for solvent extraction wet air pollution control was 430 l/kkg (103 gal/ton) of columbium or tantalum salt extracted. The BAT discharge rate was based on 90 percent recycle of the water use at one of the two plants which generate this waste stream.

The proposed BAT discharge rate has been revised based on the considerations presented in Section IX of this document. The promulgated discharge rate is 246 l/kkg (60 gal/ton) of raw material digested, and it is based on 90 percent recycle of the BPT discharge rate. One plant uses the same scrubber for both solvent extraction and concentrate digestion wet air pollution control. Both discharge allowances apply to this plant since water use in the scrubber is probably increased due to the added volume of air scrubbed.

PRECIPITATION AND FILTRATION WET AIR POLLUTION CONTROL

A discharge allowance for this waste stream was not proposed. Re-evaluation of the information supplied to the Agency has shown that a discharge allowance is necessary for plants operating scrubbers on precipitation and filtration processes. The promulgated BAT discharge rate is based on 90 percent recycle of the BPT discharge rate, or 6,351 l/kkg (1,523 gal/ton) of concentrate digested.

OXIDES CALCINING WET AIR POLLUTION CONTROL

The proposed BAT wastewater discharge rate for metal salt drying wet air pollution control was 16,479.4 l/kkg (3,961.4 gal/ton) of columbium or tantalum salt dried. The BAT discharge rate was based on 90 percent recycle of the water use at one of these plants. Two plants reported insufficient dcp information to calculate water usage, and the water usage of one plant was extremely high. These plants were not considered in calculating the BAT discharge rate.

As discussed in Section IX, the proposed metal salt drying wet air pollution control allowance has been divided into tantalum salt drying and oxides calcining wet air pollution control. The promulgated BAT discharge rate for oxides calcining wet air pollution control is based on 90 percent recycle of the BPT discharge rate, or 3,842 l/kkg (921 gal/ton) of columbium or

tantalum oxide dried.

REDUCTION OF TANTALUM SALT TO METAL WET AIR POLLUTION CONTROL

The BAT promulgation discharge rate is equal to the BPT rate presented in Section IX of this document, which is 2,043 l/kkg (490 gal/ton) of tantalum salt reduced. The proposal discharge rate was based on 90 percent recycle; , recycle is not appropriate for the two plants that operate this scrubber. Both plants utilize rotoclone scrubbers which are much different than once through scrubbers such as packed towers or venturi scrubbers. Although there may be a discharge from a rotoclone scrubber, the scrubber acts as a sparge tank by drawing the gas stream through a body of water in a tank. Water droplets and mist created due to turbulence are captured and routed back to the tank.

REGULATED POLLUTANT PARAMETERS

In implementing the Clean Water Act, the Agency placed particular emphasis on the toxic pollutants. The raw wastewater concentrations from individual operations and the subcategory as a whole were examined to select certain pollutants and pollutant parameters for limitation. This examination and evaluation was presented in Section VI. The Agency, however, has chosen not to regulate all 21 toxic pollutants selected in this analysis.

The columbium-tantalum subcategory generates an estimated 80,000 kg/yr of toxic pollutants, of which only 170 kg/yr are toxic organic pollutants. The Agency believes that the toxic organic pollutants in the columbium-tantalum subcategory are present only in trace (deminimus quantities) and are neither causing nor likely to cause toxic effects. However, it is possible toxic organic pollutants may be present in larger concentrations at an individual plant than the Agency sampling data indicate. Therefore, the permitting or control authority should check for the presence of toxic organic pollutants on a case-by-case basis and determine if they require treatment. The following toxic organic pollutants are excluded from regulation:

4. benzene
6. carbon tetrachloride
7. chlorobenzene
8. 1,2,4-trichlorobenzene
10. 1,2-dichloroethane
30. 1,2-trans-dichloroethylene
38. ethylbenzene
51. chlorodibromomethane
85. tetrachloroethylene
87. trichloroethylene

The cost associated with analysis for toxic metal pollutants has prompted EPA to develop an alternative method for regulating and monitoring toxic pollutant discharges from the nonferrous metals manufacturing category. Rather than developing specific effluent

mass limitations and standards for each of the toxic metals found in treatable concentrations in the raw wastewater from a given subcategory, the Agency is promulgating effluent mass limitations only for those pollutants generated in the greatest quantities as shown by the pollutant removal estimate analysis. The pollutants selected for specific limitation are listed below:

122. lead
128. zinc
ammonia (as N)
fluoride

By establishing limitations and standards for certain toxic metal pollutants, dischargers will attain the same degree of control over toxic metal pollutants as they would have been required to achieve had all the toxic metal pollutants been directly limited.

This approach is justified technically since the treatable concentrations used for lime precipitation and sedimentation technology are based on optimized treatment for concomitant multiple metals removal. Thus, even though metals have somewhat different theoretical solubilities, they will be removed at very nearly the same rate in a lime precipitation and sedimentation treatment system operated for multiple metals removal. Filtration as part of the technology basis is likewise justified because this technology removes metals non-preferentially.

The toxic metal pollutants selected for specific limitation in the columbium-tantalum subcategory to control the discharges of toxic metal pollutants are lead and zinc. Ammonia is also selected for limitation since the methods used to control lead and zinc are not effective in the control of ammonia. The following toxic pollutants are excluded from limitation on the basis that they are effectively controlled by the limitations developed for lead and zinc:

114. antimony
115. arsenic
116. asbestos
118. cadmium
119. chromium (Total)
120. copper
124. nickel
125. selenium
127. thallium

EFFLUENT LIMITATIONS

The concentrations achievable by application of BAT are discussed in Section VII of Vol. I and summarized there in Table VII-21 (page 248). The treatment effectiveness of both one day maximum and monthly average values are multiplied by the BAT normalized discharge flows summarized in Table X-3 (page 4486) to calculate the mass of pollutants allowed to be discharged per mass of

product. The results of these calculations in milligrams of pollutant per kilogram of product represent the BAT effluent limitations and are presented in Table X-4 (page 4488) for each waste stream.

TABLE X-1

CURRENT RECYCLE PRACTICE WITHIN THE PRIMARY COLUMBIUM-TANTALUM SUBCATEGORY

Process	Number of Plants With Wastewater	No. of Plants Practicing Recycle	Range of Recycle Values (%)
Concentrate Digestion Wet Air Pollution Control	3	1	0 - 86
Solvent Extraction Wet Air Pollution COntrol	2	1	0 - 86
Precipitation Wet Air Pollution Control	2	0	
Oxides Calcining Wet Air Pollution Control	4	2	89 - 100
Reduction of Tantalum Salt to Metal Wet Air Pollution Control	2	0	

Table X-2

POLLUTANT REMOVAL ESTIMATES FOR PRIMARY COLUMBIUM-TANTALUM DIRECT DISCHARGERS

POLLUTANT	TOTAL RAW WASTE (kg/yr)	OPTION A DISCHARGED (kg/yr)	OPTION A REMOVED (kg/yr)	OPTION B DISCHARGED (kg/yr)	OPTION B REMOVED (kg/yr)	OPTION C DISCHARGED (kg/yr)	OPTION C REMOVED (kg/yr)
Antimony	396.1	106.7	289.4	74.2	321.9	49.8	346.3
Arsenic	564.3	77.7	486.6	54.1	510.2	36.0	528.3
Cadmium	426.3	12.0	414.3	8.4	418.0	5.2	421.2
Chromium	20,888.1	12.8	20,875.3	8.9	20,879.2	7.4	20,880.6
Copper	3,503.7	88.4	3,415.3	61.5	3,442.2	41.3	3,462.3
Lead	18,149.9	18.3	18,131.6	12.7	18,137.2	8.5	18,141.4
Nickel	279.4	112.8	166.7	78.5	201.0	23.3	256.1
Zinc	17,364.4	50.3	17,314.1	35.0	17,329.4	24.4	17,340.0
TOTAL TOXIC METALS	61,572.3	478.9	61,093.4	333.2	61,239.1	196.0	61,376.3
Aluminum	7,435.6	341.3	7,094.2	237.5	7,198.1	158.0	7,277.6
Ammonia	945,842.4	4,684.8	941,157.6	3,372.8	942,469.6	3,372.8	942,469.6
Fluoride	974,798.6	2,209.5	972,589.0	1,537.3	973,261.3	1,537.3	973,261.3
Iron	352,794.3	62.5	352,731.8	43.5	352,750.8	29.7	352,764.6
TOTAL NONCONVENTIONALS	2,280,870.8	7,298.1	2,273,572.7	5,191.0	2,275,679.8	5,097.7	2,275,773.1
TSS	1,694,063.2	1,828.6	1,692,234.6	1,272.2	1,692,790.9	275.7	1,693,787.5
TOTAL CONVENTIONALS	1,694,063.2	1,828.6	1,692,234.6	1,272.2	1,692,790.9	275.7	1,693,787.5
TOTAL POLLUTANTS	4,036,506.3	9,605.6	4,026,900.7	6,796.5	4,029,709.8	5,569.4	4,030,936.9
FLOW (l/yr)		152,380,000		106,020,000		106,020,000	

NOTE: TOTAL TOXIC METALS = Antimony + Arsenic + Cadmium + Chromium + Copper + Lead + Nickel + Zinc
TOTAL NONCONVENTIONALS = Aluminum + Ammonia + Fluoride + Iron
TOTAL CONVENTIONALS = TSS
TOTAL POLLUTANTS = Total Toxic Metals + Total Nonconventionals + Total Conventionals

OPTION A = Lime Precipitation, Sedimentation, and Ammonia Steam Stripping.
OPTION B = Option A, plus In-Process Flow Reduction.
OPTION C = Option B, plus Multimedia Filtration.

Table X-3

BAT WASTEWATER DISCHARGE RATES FOR THE PRIMARY COLUMBIUM-TANTALUM SUBCATEGORY

Wastewater Stream	BAT Normalized Discharge Rate		Production Normalizing Parameter
	l/kkg	gal/ton	
Concentrate Digestion Wet Air Pollution Control	622	149	Concentrate Digested
Solvent Extraction Raffinate	9,155	2,195	Concentrate Digested
Solvent Extraction Wet Air Pollution Control	246	60	Concentrate Digested
Precipitation and Filtration Wastewater	13,689	3,283	Concentrate Digested
Precipitation and Filtration Wet Air Pollution Control	6,351	1,523	Concentrate Digested
Tantalum Salt Drying	60,542	14,518	Tantalum Salt Dried
Oxides Calcining Wet Air Pollution Control	3,842	921	Columbium or Tantalum Oxide Calcined
Reduction of Tantalum Salt to Metal	166,071	39,825	Tantalum Salt Reduced
Reduction of Tantalum Salt Metal Wet Air Pollution Control	2,043	490	Tantalum Salt Reduced

Table X-3 (Continued)

BAT WASTEWATER DISCHARGE RATES FOR THE PRIMARY COLUMBIUM-TANTALUM SUBCATEGORY

Wastewater Stream	BAT Normalized Discharge Rate		Production Normalizing Parameter
	l/kkg	gal/ton	
Tantalum Powder Wash and Scrubber	20,433	4,900	Tantalum Washed
Consolidation and Casting Contact Cooling	0	0	Columbium or Tantalum Cast or Consolidated

TABLE X-4

BAT EFFLUENT LIMITATIONS FOR THE
PRIMARY COLUMBIUM-TANTALUM SUBCATEGORY

(a) Concentrate Digestion Wet Air Pollution Control BAT

Pollutant or Pollutant Property	Maximum for Any One Day	Maximum for Monthly Average
Metric Units - mg/kg of concentrate digested English Units - lbs/million lbs of concentrate digested		
Antimony	1.200	0.535
Arsenic	0.865	0.386
Cadmium	0.124	0.050
Chromium	0.230	0.093
Copper	0.796	0.379
*Lead	0.174	0.081
Nickel	0.342	0.230
Selenium	0.510	0.230
Thallium	0.871	0.379
*Zinc	0.635	0.261
*Ammonia (as N)	82.910	36.450
*Fluoride	21.770	12.440

(b) Solvent Extraction Raffinate BAT

Pollutant or Pollutant Property	Maximum for Any One Day	Maximum for Monthly Average
Metric Units - mg/kg of concentrate digested English Units - lbs/million lbs of concentrate digested		
Antimony	17.670	7.873
Arsenic	12,730	5,676
Cadmium	1.831	0.732
Chromium	3.387	1.373
Copper	11.720	5.585
*Lead	2.563	1.190
Nickel	5.035	0.000
Selenium	7.507	3.387
Thallium	7.507	3.387
*Zinc	9.338	3.845
*Ammonia (as N)	1,221.000	536.500
*Fluoride	320.400	183.100

TABLE X-4 (Continued)

BAT EFFLUENT LIMITATIONS FOR THE
PRIMARY COLUMBIUM-TANTALUM SUBCATEGORY

(c) Solvent Extraction Wet Air Pollution Control BAT

Pollutant or Pollutant Property	Maximum for Any One Day	Maximum for Monthly Average
Metric Units - mg/kg of concentrate digested English Units - lbs/million lbs of concentrate digested		
Antimony	0.475	0.212
Arsenic	0.342	0.153
Cadmium	0.049	0.020
Chromium	0.091	0.167
Copper	0.315	0.000
*Lead	0.069	0.032
Nickel	0.135	0.091
Selenium	0.202	0.091
Thallium	0.344	0.150
*Zinc	0.251	0.103
*Ammonia (as N)	32.790	14.420
*Fluoride	8.610	4.920

(d) Precipitation and Filtration BAT

Pollutant or Pollutant Property	Maximum for Any One Day	Maximum for Monthly Average
Metric Units - mg/kg of concentrate digested English Units - lbs/million lbs of concentrate digested		
Antimony	26.430	11.770
Arsenic	19.030	8.487
Cadmium	2.738	1.095
Chromium	5.065	2.053
Copper	17.520	8.350
*Lead	3.833	1.780
Nickel	7.529	5.065
Selenium	11.230	5.065
Thallium	19.170	8.350
*Zinc	13.960	5.750
*Ammonia (as N)	1,825.000	802.200
*Fluoride	479.100	273.800

(e) Precipitation and Filtration Wet Air Pollution Control BAT

Pollutant or Pollutant Property	Maximum for Any One Day	Maximum for Monthly Average
Metric Units - mg/kg of concentrate digested English Units - lbs/million lbs of concentrate digested		
Antimony	12.260	5.462
Arsenic	8.828	3.938
Cadmium	1.270	0.508
Chromium	2.350	0.953
Copper	8.129	3.874
*Lead	1.778	0.826
Nickel	3.493	2.350
Selenium	5.208	2.350
Thallium	8.891	3.874
*Zinc	6.478	2.668
*Ammonia (as N)	846.600	372.200
*Fluoride	222.300	127.000

(f) Tantalum Salt Drying BAT

Pollutant or Pollutant Property	Maximum for Any One Day	Maximum for Monthly Average
Metric Units - mg/kg of tantalum salt dried English Units - lbs/million lbs of tantalum salt dried		
Antimony	116.800	52.070
Arsenic	84.150	37.540
Cadmium	12.110	4.843
Chromium	22.400	9.081
Copper	77.490	36.930
*Lead	16.950	7.870
Nickel	33.300	22.400
Selenium	49.640	22.400
Thallium	84.760	36.930
Lead	16.950	7.871
Zinc	61.750	25.430
Ammonia (as N)	8,070.000	3,548.000
Fluoride	2,119.000	1,211.000

(g) Oxides Calcining Wet Air Pollution Control BAT

Pollutant or Pollutant Property	Maximum for Any One Day	Maximum for Monthly Average
Metric Units - mg/kg of columbium-tantalum oxide dried		
English Units - lbs/million lbs of columbium-tantalum oxide dried		
Antimony	7.415	3.304
Arsenic	5.340	2.382
Cadmium	0.768	0.307
Chromium	1.422	0.576
Copper	4.918	2.344
*Lead	1.076	0.500
Nickel	2.113	1.422
Selenium	3.150	1.422
Thallium	5.379	2.344
*Zinc	3.919	1.614
*Ammonia (as N)	512.200	225.200
*Fluoride	134.500	76.840

(h) Reduction of Tantalum Salt to Metal BAT

Pollutant or Pollutant Property	Maximum for Any One Day	Maximum for Monthly Average
Metric Units - mg/kg of tantalum salt reduced		
English Units - lbs/million lbs of tantalum salt reduced		
Antimony	320.500	142.800
Arsenic	230.800	103.000
Cadmium	33.210	13.290
Chromium	61.450	24.910
Copper	212.600	101.300
*Lead	46.500	21.590
Nickel	91.340	61.450
Selenium	136.200	61.450
Thallium	232.500	101.300
*Zinc	169.400	69.750
*Ammonia (as N)	22,140.000	9,732.000
*Fluoride	5,813.000	3,322.000

TABLE X-4 (Continued)

BAT EFFLUENT LIMITATIONS FOR THE
PRIMARY COLUMBIUM-TANTALUM SUBCATEGORY

(i) Reduction of Tantalum Salt to Metal Wet Air Pollution Control BAT

Pollutant or Pollutant Property	Maximum for Any One Day	Maximum for Monthly Average
Metric Units - mg/kg of tantalum salt reduced English Units - lbs/million lbs of tantalum salt reduced		
Antimony	3.943	1.757
Arsenic	2.840	1.267
Cadmium	0.409	0.163
Chromium	0.756	0.306
Copper	2.615	1.246
*Lead	0.572	0.266
Nickel	1.124	0.756
Selenium	1.675	0.756
Thallium	2.860	1.246
*Zinc	2.084	0.858
*Ammonia (as N)	272.400	119.700
*Fluoride	71.510	40.860

(j) Tantalum Powder Wash BAT

Pollutant or Pollutant Property	Maximum for Any One Day	Maximum for Monthly Average
Metric Units - mg/kg of tantalum powder washed English Units - lbs/million lbs of tantalum powder washed		
Antimony	39.440	17.570
Arsenic	28.400	12.670
Cadmium	4.087	1.635
Chromium	7.560	3.065
Copper	26.150	12.460
*Lead	5.721	2.656
Nickel	11.240	7.560
Selenium	16.760	7.560
Thallium	28.610	12.460
*Zinc	20.840	8.582
*Ammonia (as N)	2,724.000	1,198.000
*Fluoride	715.200	408.700

TABLE X-4 (Continued)

BAT EFFLUENT LIMITATIONS FOR THE
PRIMARY COLUMBIUM-TANTALUM SUBCATEGORY

(k) Consolidation and Casting Contact Cooling BAT

Pollutant or Pollutant Property	Maximum for Any One Day	Maximum for Monthly Average
Metric Units - mg/kg of columbium or tantalum cast or consolidated English Units - lbs/million lbs of columbium or tantalum cast or consolidated		
Antimony	0.000	0.000
Arsenic	0.000	0.000
Cadmium	0.000	0.000
Chromium	0.000	0.000
Copper	0.000	0.000
*Lead	0.000	0.000
Nickel	0.000	0.000
Selenium	0.000	0.000
Thallium	0.000	0.000
*Zinc	0.000	0.000
*Ammonia (as N)	0.000	0.000
*Fluoride	0.000	0.000

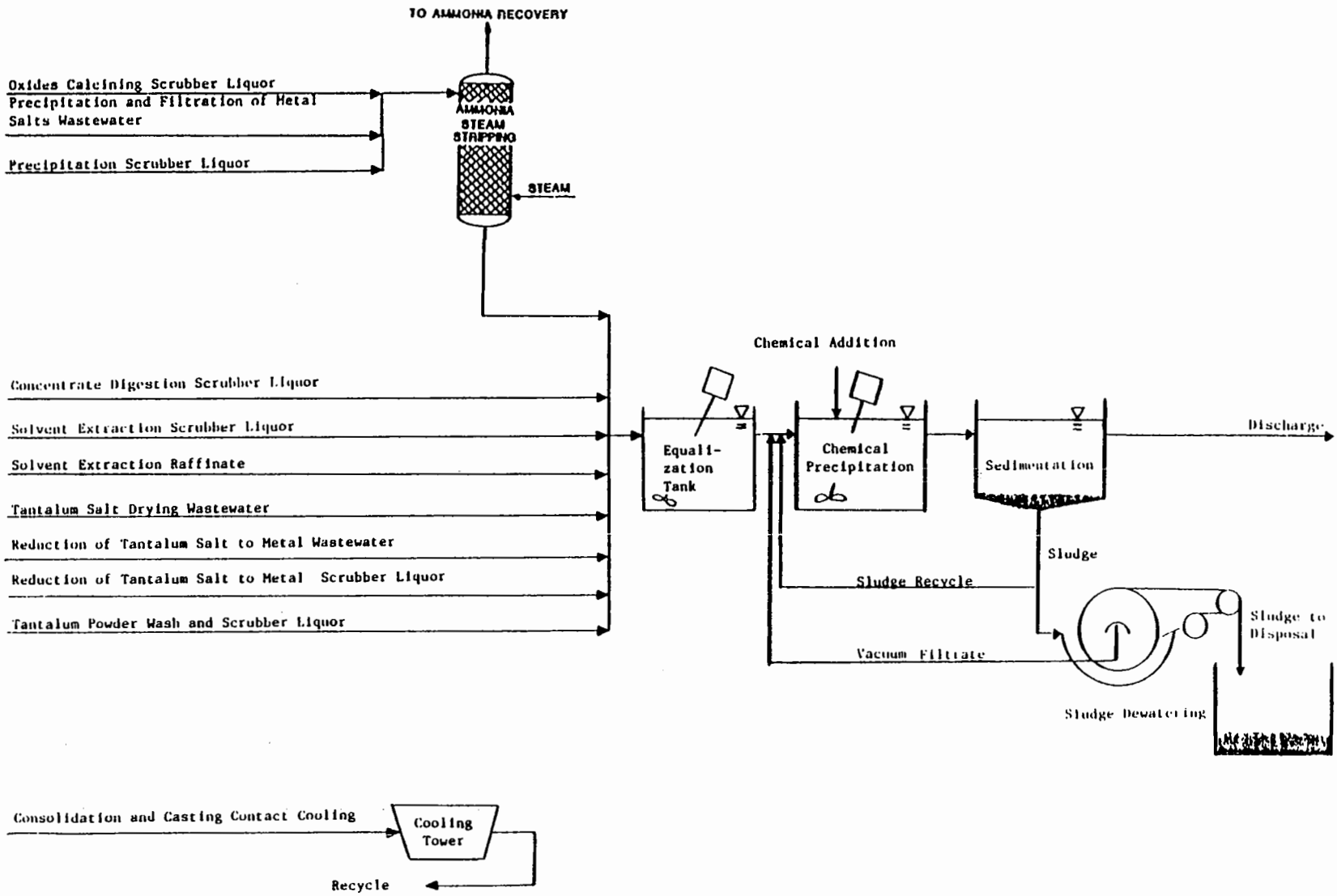

Figure X-1

BAT TREATMENT SCHEME OPTION A
PRIMARY COLUMBIUM-TANTALUM SUBCATEGORY

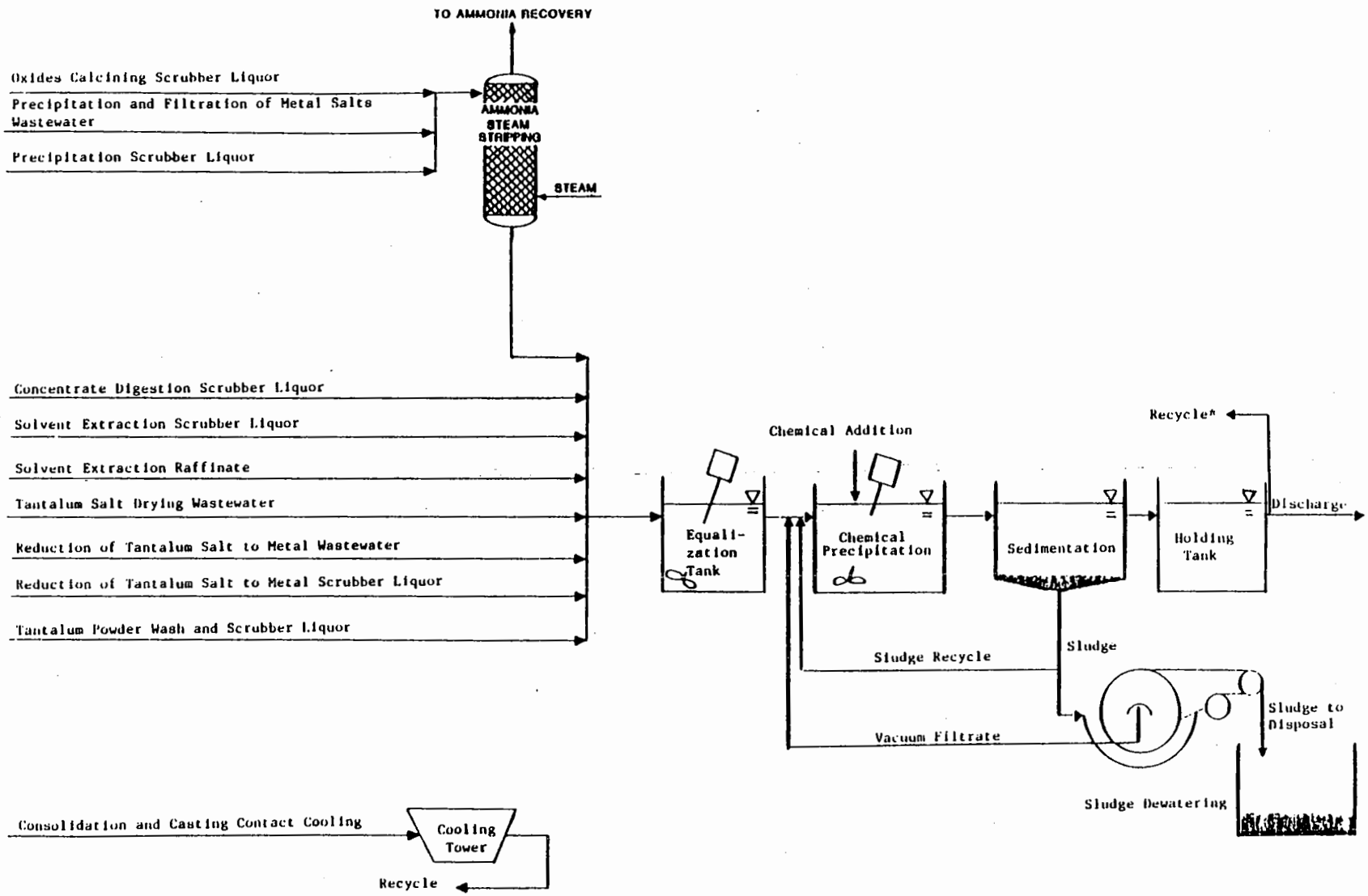

*90% Recycle of Concentrate Digestion, Solvent Extraction, Precipitation, and Oxides Calcining Scrubber Liquors.

Figure X-2

BAT TREATMENT SCHEME OPTION B
PRIMARY COLUMBIUM-TANTALUM SUBCATEGORY

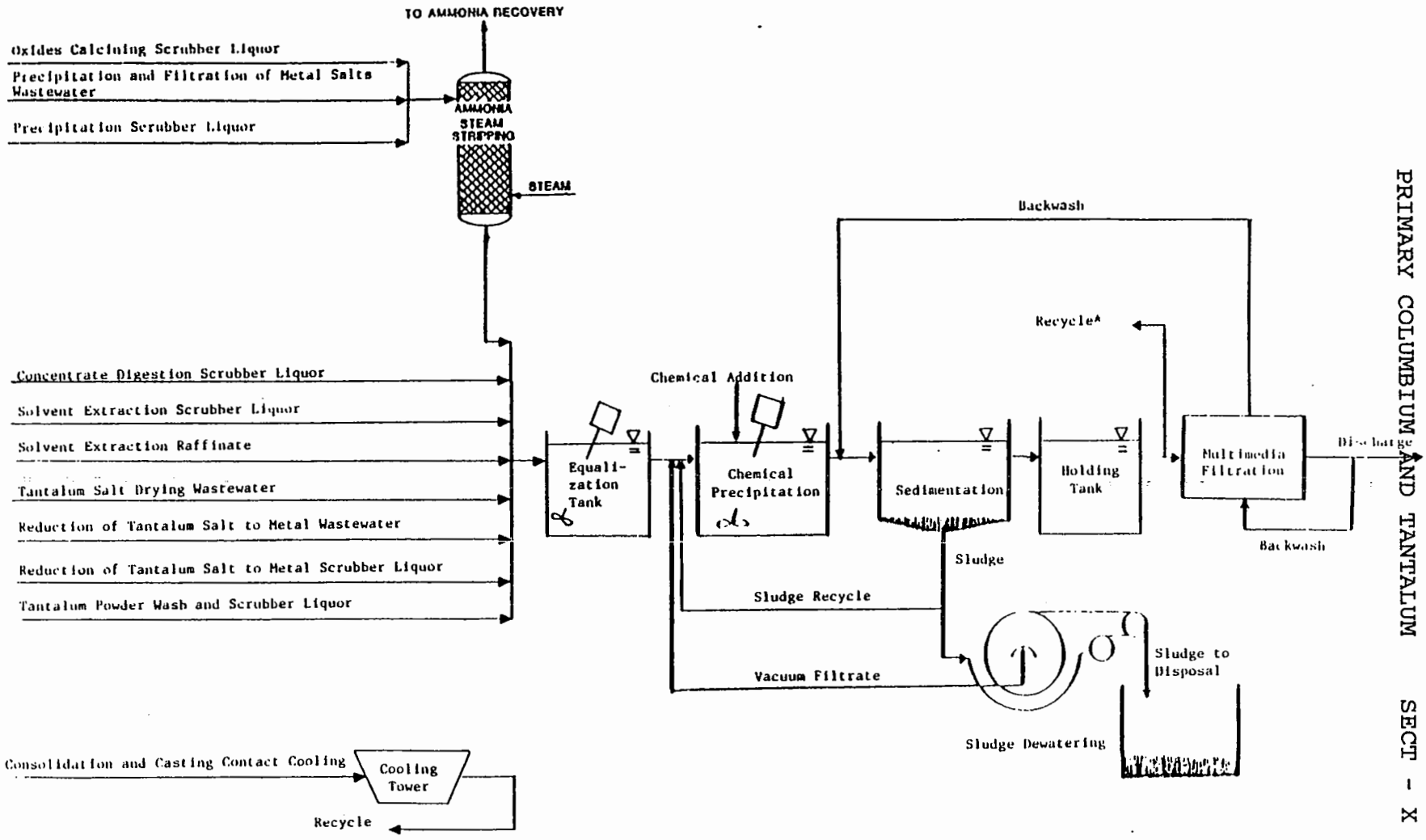

*90% Recycle of Concentrate Digestion, Solvent Extraction, Precipitation, and Oxides Calcining Scrubber Liquors.

Figure X-3

BAT TREATMENT SCHEME OPTION C
PRIMARY COLUMBIUM-TANTALUM SUBCATEGORY

SECTION XI

NEW SOURCE PERFORMANCE STANDARDS

This section describes the control technology for treatment of wastewater from new sources, and presents mass discharge limitations of regulated pollutants for NSPS in the primary columbium-tantalum subcategory, based on the described control technology. New plants have the opportunity to design the best and most efficient production processes and wastewater treatment technologies, without facing the added costs and restrictions encountered in retrofitting an existing plant. Therefore, EPA had considered the best demonstrated process changes, in-plant controls, and end-of-pipe treatment technologies which reduce pollution to the maximum extent feasible.

TECHNICAL APPROACH TO BDT

All of the treatment technology options applicable to a new source were previously considered for the BAT options. For this reason, three options were considered for BDT, all identical to BAT Options A, B, and C, which are discussed in Section X. Briefly, the treatment technologies used for the three options are as follows:

OPTION A

- Chemical precipitation and sedimentation
- Ammonia steam stripping preliminary treatment of wastewaters containing treatable concentrations of ammonia

OPTION B

- Chemical precipitation and sedimentation
- Ammonia steam stripping preliminary treatment of wastewaters containing treatable concentrations of ammonia
- In-process flow reduction

OPTION C

- Chemical precipitation and sedimentation
- Ammonia steam stripping preliminary treatment of wastewaters containing treatable concentrations of ammonia
- In-process flow reduction
- Multimedia filtration

Partial or complete recycle and reuse of wastewater is an essential part of the last two options. Recycle and reuse can precede or follow end-of-pipe treatment. A more detailed discussion of the treatment options is presented in Section X.

EPA proposed that the best available demonstrated technology for the primary columbium-tantalum subcategory be equal to BAT (Option C). Review of the subcategory indicated that no new

demonstrated technologies that improve on BAT technology exist. Therefore, EPA is promulgating effluent mass limitations for NSPS equivalent to BAT.

Dry scrubbing is not demonstrated for controlling emissions from concentrate digestion, oxides calcining, precipitation and filtration, and salt to metal reduction. The nature of these emissions (acidic fumes, hot particulate matter) technically precludes the use of dry scrubbers. Therefore, EPA is including an allowance for these sources at NSPS equivalent to that promulgated for BAT. The Agency also does not believe that new plants could achieve any additional flow reduction beyond that promulgated for BAT.

Activated alumina (Option D) was considered; however, this technology was rejected because it too was not demonstrated in this category, nor was it clearly transferable to nonferrous wastewater. Activated carbon (Option E) was also considered; however, this technology was eliminated because it is not necessary, since toxic organic pollutants are not selected for limitation in this subcategory.

Reverse osmosis (Option F) was considered for the purpose of achieving zero discharge of process wastewater; however, the Agency ultimately rejected this technology because it was determined that its performance for this specific purpose was not adequately demonstrated in this category nor was it clearly transferable from another category.

REGULATED POLLUTANT PARAMETERS

The Agency has no reason to believe that the pollutants that will be found in treatable concentrations in processes within new sources will be any different than with existing sources. Accordingly, pollutants and pollutant parameters selected for limitation in Section X are also selected for limitation in NSPS.

NEW SOURCE PERFORMANCE STANDARDS

The NSPS discharge flows for each wastewater source are the same as the BAT discharge rates listed in Section X. The mass of pollutant allowed to be discharged per mass of product is calculated by multiplying the appropriate achievable treatment concentration by the production normalized wastewater discharge flows (l/kkg). These achievable treatment concentrations are discussed in Section VII. The results of these calculations are the production-based new source performance standards, and are presented in Table XI-2 (page 4501). The NSPS wastewater discharge rates are presented in Table XI-1 (page 4499). Since both the discharge flows and the achievable treatment concentrations are the same for new sources and BAT, the NSPS are identical to the BAT mass limitations.

Table XI-1

NSPS WASTEWATER DISCHARGE RATES FOR THE PRIMARY COLUMBIUM-TANTALUM SUBCATEGORY

Wastewater Stream	NSPS Normalized Discharge Rate		Production Normalizing Parameter
	l/kkg	gal/ton	
Concentrate Digestion Wet Air Pollution Control	622	149	Concentrate Digested
Solvent Extraction Raffinate	9,155	2,195	Concentrate Digested
Solvent Extraction Wet Air Pollution Control	246	60	Concentrate Digested
Precipitation and Filtration Wastewater	13,689	3,283	Concentrate Digested
Precipitation and Filtration Wet Air Pollution Control	6,351	1,523	Concentrate Digested
Tantalum Salt Drying	60,542	14,518	Tantalum Salt Dried
Oxides Calcining Wet Air Pollution Control	3,842	921	Columbium or Tantalum Oxide Calcined
Reduction of Tantalum Salt to Metal	166,071	39,825	Tantalum Salt Reduced
Reduction of Tantalum Salt Metal Wet Air Pollution Control	2,043	490	Tantalum Salt Reduced

Table XI-1 (Continued)

NSPS WASTEWATER DISCHARGE RATES FOR THE PRIMARY COLUMBIUM-TANTALUM SUBCATEGORY

Wastewater Stream	NSPS Normalized Discharge Rate		Production Normalizing Parameter
	l/kkg	gal/ton	
Tantalum Powder Wash and Scrubber	20,433	4,900	Tantalum Washed
Consolidation and Casting Contact Cooling	0	0	Columbium or Tantalum Cast or Consolidated

TABLE XI-2

NSPS FOR THE PRIMARY COLUMBIUM-TANTALUM SUBCATEGORY

(a) Concentrate Digestion Wet Air Pollution Control NSPS

Pollutant or Pollutant Property	Maximum for Any One Day	Maximum for Monthly Average
Metric Units - mg/kg of concentrate digested English Units - lbs/million lbs of concentrate digested		
Antimony	1.200	0.535
Arsenic	0.865	0.386
Cadmium	0.124	0.050
Chromium	0.230	0.093
Copper	0.796	0.379
*Lead	0.174	0.081
Nickel	0.342	0.230
Selenium	0.510	0.230
Thallium	0.871	0.379
*Zinc	0.635	0.261
*Ammonia	82.910	36.450
*Fluoride	21.770	12.440
*TSS	9.330	7.464
*pH	Within the range of 7.0 to 10.0 at all times	

(b) Solvent Extraction Raffinate NSPS

Pollutant or Pollutant Property	Maximum for Any One Day	Maximum for Monthly Average
Metric Units - mg/kg of concentrate digested English Units - lbs/million lbs of concentrate digested		
Antimony	17.670	7.873
Arsenic	12.730	5.676
Cadmium	1.831	0.732
Chromium	3.387	1.373
Copper	11.720	5.585
*Lead	2.563	1.190
Nickel	5.035	3.387
Selenium	7.507	3.387
Thallium	12.820	5.585
*Zinc	9.338	3.845
*Ammonia (as N)	1220.000	536.500
*Fluoride	320.400	183.100
*TSS	137.300	109.900
*pH	Within the range of 7.0 to 10.0 at all times	

TABLE XI-2 (Continued)

NSPS FOR THE PRIMARY COLUMBIUM-TANTALUM SUBCATEGORY

(c) Solvent Extraction Wet Air Pollution Control NSPS

Pollutant or Pollutant Property	Maximum for Any One Day	Maximum for Monthly Average
Metric Units - mg/kg of concentrate digested English Units - lbs/million lbs of concentrate digested		
Antimony	0.475	0.212
Arsenic	0.342	0.153
Cadmium	0.049	0.020
Chromium	0.091	0.037
Copper	0.315	0.150
*Lead	0.069	0.032
Nickel	0.135	0.091
Selenium	0.202	0.091
Thallium	0.344	0.150
*Zinc	0.251	0.103
*Ammonia (as N)	32.790	14.420
*Fluoride	8.610	4.920
*TSS	3.690	2.952
*pH	Within the range of 7.0 to 10.0 at all times	

(d) Precipitation and Filtration NSPS

Pollutant or Pollutant Property	Maximum for Any One Day	Maximum for Monthly Average
Metric Units - mg/kg of concentrate digested English Units - lbs/million lbs of concentrate digested		
Antimony	26.420	11.770
Arsenic	19.030	8.487
Cadmium	2.738	1.095
Chromium	5.065	2.053
Copper	17.520	8.350
*Lead	3.833	1.780
Nickel	7.529	5.065
Selenium	11.230	5.065
Thallium	19.170	8.350
*Zinc	13.960	5.750
*Ammonia (as N)	1825.000	802.200
*Fluoride	479.100	273.800
*TSS	205.400	164.300
*pH	Within the range of 7.0 to 10.0 at all times	

TABLE XI-2 (Continued)

NSPS FOR THE PRIMARY COLUMBIUM-TANTALUM SUBCATEGORY

(e) Precipitation and Filtration Wet Air Pollution Control NSPS

Pollutant or Pollutant Property	Maximum for Any One Day	Maximum for Monthly Average
Metric Units - mg/kg of concentrate digested English Units - lbs/million lbs of concentrate digested		
Antimony	12.260	5.462
Arsenic	8.828	3.938
Cadmium	1.270	0.508
Chromium	2.350	0.953
Copper	8.129	3.874
*Lead	1.778	0.826
Nickel	3.493	2.350
Selenium	5.208	2.350
Thallium	8.891	3.874
*Zinc	6.478	2.668
*Ammonia (as N)	846.600	372.200
*Fluoride	222.300	127.000
*TSS	95.270	76.210
*pH	Within the range of 7.0 to 10.0 at all times	

(f) Tantalum Salt Drying NSPS

Pollutant or Pollutant Property	Maximum for Any One Day	Maximum for Monthly Average
Metric Units - mg/kg of tantalum salt dried English Units - lbs/million lbs of tantalum salt dried		
Antimony	116.800	52.070
Arsenic	84.150	37.540
Cadmium	12.110	4.843
Chromium	22.400	9.081
Copper	77.490	36.930
*Lead	16.950	7.870
Nickel	33.300	22.400
Selenium	49.640	22.400
Thallium	84.760	36.930
*Zinc	61.750	25.430
*Ammonia (as N)	8070.000	3548.000
*Fluoride	2119.000	1211.000
*TSS	908.200	726.500
*pH	Within the range of 7.0 to 10.0 at all times	

TABLE XI-2 (Continued)

NSPS FOR THE PRIMARY COLUMBIUM-TANTALUM SUBCATEGORY

(g) Oxides Calcining Wet Air Pollution Control NSPS

Pollutant or Pollutant Property	Maximum for Any One Day	Maximum for Monthly Average
Metric Units - mg/kg of columbium-tantalum oxide dried English Units - lbs/million lbs of columbium-tantalum oxide dried		
Antimony	7.415	3.304
Arsenic	5.340	2.382
Cadmium	0.768	0.307
Chromium	1.422	0.576
Copper	4.918	2.344
*Lead	1.076	0.499
Nickel	2.113	1.422
Selenium	3.150	1.422
Thallium	5.379	2.344
*Zinc	3.919	1.614
*Ammonia (as N)	512.200	225.200
*Fluoride	134.500	76.840
*TSS	57.630	46.110
*pH	Within the range of 7.0 to 10.0 at all times	

(h) Reduction of Tantalum Salt to Metal NSPS

Pollutant or Pollutant Property	Maximum for Any One Day	Maximum for Monthly Average
Metric Units - mg/kg of tantalum salt reduced English Units - lbs/million lbs of tantalum salt reduced		
Antimony	320.500	142.800
Arsenic	230.800	103.000
Cadmium	33.210	13.290
Chromium	61.450	24.900
Copper	212.600	101.300
*Lead	46.500	21.590
Nickel	91.340	61.450
Selenium	136.200	61.450
Thallium	232.500	101.300
*Zinc	169.400	69.750
*Ammonia (as N)	22140.000	9732.000
*Fluoride	5813.000	3322.000
*TSS	2491.000	1993.000
*pH	Within the range of 7.0 to 10.0 at all times	

TABLE XI-2 (Continued)

NSPS FOR THE PRIMARY COLUMBIUM-TANTALUM SUBCATEGORY

(i) Reduction of Tantalum Salt to Metal Wet Air Pollution Control NSPS

Pollutant or Pollutant Property	Maximum for Any One Day	Maximum for Monthly Average
Metric Units - mg/kg of tantalum salt reduced English Units - lbs/million lbs of tantalum salt reduced		
Antimony	3.943	1.757
Arsenic	2.840	1.267
Cadmium	0.409	0.163
Chromium	0.756	0.306
Copper	2.615	1.246
*Lead	0.572	0.266
Nickel	1.124	0.756
Selenium	1.675	0.756
Thallium	2.860	1.246
*Zinc	2.084	0.858
*Ammonia (as N)	272.400	119.700
*Fluoride	71.510	40.860
*TSS	30.650	24.520
*pH	Within the range of 7.0 to 10.0 at all times	

(j) Tantalum Powder Wash NSPS

Pollutant or Pollutant Property	Maximum for Any One Day	Maximum for Monthly Average
Metric Units - mg/kg of tantalum powder washed English Units - lbs/million lbs of tantalum powder washed		
Antimony	39.440	17.570
Arsenic	28.400	12.670
Cadmium	4.087	1.635
Chromium	7.560	3.065
Copper	26.150	12.460
*Lead	5.721	2.656
Nickel	11.240	7.560
Selenium	16.760	7.560
Thallium	28.610	12.460
*Zinc	20.840	8.582
*Ammonia (as N)	2724.000	1198.000
*Fluoride	715.200	408.700
*TSS	306.500	245.220
*pH	Within the range of 7.0 to 10.0 at all times	

TABLE XI-2 (Continued)

NSPS FOR THE PRIMARY COLUMBIUM-TANTALUM SUBCATEGORY

(k) Consolidation and Casting Contact Cooling NSPS

Pollutant or Pollutant Property	Maximum for Any One Day	Maximum for Monthly Average
Metric Units - mg/kg of columbium or tantalum cast or consolidated		
English Units - lbs/million lbs of columbium or tantalum cast or consolidated		
Antimony	0.000	0.000
Arsenic	0.000	0.000
Cadmium	0.000	0.000
Chromium	0.000	0.000
Copper	0.000	0.000
*Lead	0.000	0.000
Nickel	0.000	0.000
Selenium	0.000	0.000
Thallium	0.000	0.000
*Zinc	0.000	0.000
*Ammonia (as N)	0.000	0.000
*Fluoride	0.000	0.000
*TSS	0.000	0.000
*pH	Within the range of 7.0 to 10.0 at all times	

SECTION XII

PRETREATMENT STANDARDS

This section describes the control and treatment technologies for pretreatment of process wastewaters from existing sources and new sources in the primary columbium-tantalum subcategory. PSES are designed to prevent the discharge of pollutants which pass through, interfere with, or are otherwise incompatible with the operation of publicly owned treatment works (POTW). The Clean Water Act of 1977 requires pretreatment for pollutants, such as toxic metals, that limit POTW sludge management alternatives. New indirect discharge facilities, like new direct discharge facilities, have the opportunity to incorporate the best available demonstrated technologies, including process changes, in-plant controls, and end-of-pipe treatment technologies, and to use plant site selection to ensure adequate treatment system installation. Pretreatment standards are to be technology-based, analogous to the best available or best demonstrated technology for removal of toxic pollutants. Pretreatment standards for regulated pollutants are presented based on the selected control and treatment technology.

TECHNICAL APPROACH TO PRETREATMENT

Before proposing pretreatment standards, the Agency examines whether the pollutants discharged by the industry pass through the POTW or interfere with the POTW operation or its chosen sludge disposal practices. In determining whether pollutants pass through a well-operated POTW, achieving secondary treatment, the Agency compares the percentage of a pollutant removed by POTW with the percentage removed by direct dischargers applying the best available technology economically achievable. A pollutant is deemed to pass through the POTW when the average percentage removed nationwide by well-operated POTW meeting secondary treatment requirements, is less than the percentage removed by direct dischargers complying with BAT effluent limitations guidelines for that pollutant. (See generally, 46 FR at 9415-16 (January 28, 1981).)

This definition of pass through satisfies the two competing objectives set by Congress that standards for indirect dischargers be equivalent to standards for direct dischargers, while at the same time, the treatment capability and performance of the POTW be recognized and taken into account in regulating the discharge of pollutants from indirect dischargers.

The Agency compares percentage removal rather than the mass or concentration of pollutants discharged because the latter would not take into account the mass of pollutants discharged to the POTW from non-industrial sources nor the dilution of the pollutants in the POTW effluent to lower concentrations due to the addition of large amounts of non-industrial wastewater.

PRETREATMENT STANDARDS FOR EXISTING AND NEW SOURCES

Options for pretreatment of wastewaters are based on increasing the effectiveness of end-of-pipe treatment technologies. All in-plant changes and applicable end-of-pipe treatment processes have been discussed previously in Sections X and XI. The options for PSES and PSNS, therefore, are the same as the BAT options discussed in Section X.

A description of each option is presented in Section X, while a more detailed discussion, including pollutants controlled by each treatment process and achievable treatment concentrations are presented in Section VII of the General Development Document.

The treatment technology options for the PSES and PSNS are:

Option A

- Chemical precipitation and sedimentation
- Ammonia steam stripping of wastewaters containing treatable concentrations of ammonia

Option B

- Chemical precipitation and sedimentation
- Ammonia steam stripping of wastewaters containing treatable concentrations of ammonia
- In-process flow reduction

Option C

- Chemical precipitation and sedimentation
- Ammonia steam stripping of wastewaters containing treatable concentrations of ammonia
- In-process flow reduction
- Multimedia filtration

INDUSTRY COST AND POLLUTANT REMOVAL ESTIMATES

The industry cost and environmental benefits of each treatment option were used to determine incremental removals and costs. The methodology applied in calculating pollutant reduction benefits and plant compliance costs is discussed in Section X. Table XII-1 (page 4510) shows the estimated pollutant removals for indirect dischargers, while compliance costs are presented in Table VIII-2 (page 4453).

PSES AND PSNS OPTION SELECTION

EPA is promulgating PSES equal to BAT for this subcategory. It is necessary to promulgate PSES to prevent pass-through of lead, zinc, fluoride, and ammonia. The technology basis for PSES is lime precipitation and sedimentation, ammonia steam stripping, wastewater flow reduction and filtration. Flow reduction for the

selected technology represents an 80 percent reduction in flow over current discharge rates.

Implementation of the promulgated PSES limitations would remove an estimated 18,590 kg/yr of toxic pollutants, 290,460 kg/yr of ammonia, and 400,175 kg/yr of fluoride over estimated raw discharge. The final PSES effluent mass limitations will remove 57 kg/yr of toxic metals over the intermediate PSES options considered, which lacks filtration. Both options are economically achievable and both prevent pass-through. The Agency is thus selecting PSES equal to BAT. The estimated capital cost for achieving PSES is $1.0 million (March, 1982 dollars), and the annual cost is $0.7 million.

The technology basis for promulgated PSNS is identical to NSPS, PSES, and BAT. The same pollutants pass through as at PSES, for the same reasons. EPA knows of no economically feasible, demonstrated technology that is better than PSES technology. The PSES flow allowances are based on minimization of process wastewater whenever possible through the use of lime precipitation and sedimentation to remove fluoride for wet scrubbing wastewater. Because PSNS does not include any additional costs compared to NSPS and PSES, the Agency does not believe it will prevent entry of new plants.

REGULATED POLLUTANT PARAMETERS

The pollutants and pollutant parameters selected for limitation, in accordance with the rationale of Section X, are identical to those selected for limitation for BAT. PSES and PSNS prevent the pass-through of lead, zinc, fluoride, and ammonia.

PRETREATMENT STANDARDS

The PSES and PSNS discharge flows are identical to the BAT discharge flows for all processes. These discharge flows are listed in Table XII-2 (page 4511). The mass of pollutant allowed to be discharged per mass of product is calculated by multiplying the achievable treatment concentration (mg/l) by the normalized wastewater discharge flow (l/kkg). Pretreatment standards for existing and new sources, as determined from the above procedure, are shown in Tables XII-3 and XII-4 (pages 4513 and 4519) for each waste stream.

Mass-based standards are promulgated for the columbium-tantalum subcategory to ensure that the standards are achieved by means of pollutant removal rather than by dilution. They are particularly important since the standards are based upon flow reduction; pollutant limitations associated with flow reduction cannot be measured any other way but as a reduction of mass discharged. The flow reduction over estimated current flow for the columbium-tantalum subcategory is 80 percent.

Table XII-1

POLLUTANT REMOVAL ESTIMATES FOR PRIMARY COLUMBIUM-TANTALUM INDIRECT DISCHARGERS

POLLUTANT	TOTAL RAW WASTE (kg/yr)	OPTION A DISCHARGED (kg/yr)	OPTION A REMOVED (kg/yr)	OPTION B DISCHARGED (kg/yr)	OPTION B REMOVED (kg/yr)	OPTION C DISCHARGED (kg/yr)	OPTION C REMOVED (kg/yr)
Antimony	119.4	47.4	72.0	30.9	88.5	20.7	98.7
Arsenic	171.8	34.5	137.3	22.5	149.3	15.0	156.8
Cadmium	137.7	5.3	132.3	3.5	134.2	2.2	135.5
Chromium	6,326.4	5.7	6,320.7	3.7	6,322.7	3.1	6,323.3
Copper	1,065.8	39.2	1,026.6	25.6	1,040.2	17.2	1,048.6
Lead	5,501.0	8.1	5,492.9	5.3	5,495.7	3.5	5,497.5
Nickel	114.6	50.1	64.5	32.7	81.9	9.7	104.9
Zinc	5,234.0	22.3	5,211.6	14.6	5,219.4	10.1	5,223.8
TOTAL TOXIC METALS	18,670.7	212.7	18,458.0	138.7	18,532.0	81.6	18,589.1
Aluminum	3,151.3	151.6	2,999.8	98.8	3,052.5	65.7	3,085.6
Ammonia	291,875.0	2,165.2	289,709.9	1,411.9	290,463.1	1,411.9	290,463.1
Fluoride	400,815.4	981.1	399,834.3	639.8	400,175.6	639.8	400,175.6
Iron	107,248.8	27.7	107,221.1	18.1	107,230.7	12.4	107,236.5
TOTAL NONCONVENTIONALS	803,090.6	3,325.6	799,765.0	2,168.6	800,921.9	2,129.8	800,960.8
TSS	658,952.3	811.9	658,140.3	529.5	658,422.8	114.7	658,837.6
TOTAL CONVENTIONALS	658,952.3	811.9	658,140.3	529.5	658,422.8	114.7	658,837.6
TOTAL POLLUTANTS	1,480,713.5	4,350.2	1,476,363.4	2,836.8	1,477,876.7	2,326.1	1,478,387.4
FLOW (l/yr)		67,662,000		44,123,000		44,123,000	

NOTE: TOTAL TOXIC METALS = Antimony + Arsenic + Cadmium + Chromium + Copper + Lead + Nickel + Zinc
TOTAL NONCONVENTIONALS = Aluminum + Ammonia + Fluoride + Iron
TOTAL CONVENTIONALS = TSS
TOTAL POLLUTANTS = Total Toxic Metals + Total Nonconventionals + Total Conventionals

OPTION A = Lime Precipitation, Sedimentation, and Ammonia Steam Stripping
OPTION B = Option A, plus In-Process Flow Reduction
OPTION C = Option B, plus Multimedia Filtration

Table XII-2

PSES AND PSNS WASTEWATER DISCHARGE RATES FOR THE PRIMARY COLUMBIUM-TANTALUM SUBCATEGORY

Wastewater Stream	PSES and PSNS Normalized Discharge Rate		Production Normalizing Parameter
	l/kkg	gal/ton	
Concentrate Digestion Wet Air Pollution Control	622	149	Concentrate Digested
Solvent Extraction Raffinate	9,155	2,195	Concentrate Digested
Solvent Extraction Wet Air Pollution Control	246	60	Concentrate Digested
Precipitation and Filtration Wastewater	13,689	3,283	Concentrate Digested
Precipitation and Filtration Wet Air Pollution Control	6,351	1,523	Concentrate Digested
Tantalum Salt Drying	60,542	14,518	Tantalum Salt Dried
Oxides Calcining Wet Air Pollution Control	3,842	921	Columbium or Tantalum Oxide Calcined
Reduction of Tantalum Salt to Metal	166,071	39,825	Tantalum Salt Reduced
Reduction of Tantalum Salt Metal Wet Air Pollution Control	2,043	490	Tantalum Salt Reduced

Table XII-2

PSES AND PSNS WASTEWATER DISCHARGE RATES FOR THE PRIMARY COLUMBIUM-TANTALUM SUBCATEGORY

Wastewater Stream	PSES and PSNS Normalized Discharge Rate		Production Normalizing Parameter
	l/kkg	gal/ton	
Tantalum Powder Wash and Scrubber	20,433	4,900	Tantalum Washed
Consolidation and Casting Contact Cooling	0	0	Columbium or Tantalum Cast or Consolidated

TABLE XII-3

PSES FOR THE PRIMARY COLUMBIUM-TANTALUM SUBCATEGORY

(a) Concentrate Digestion Wet Air Pollution Control PSES

Pollutant or Pollutant Property	Maximum for Any One Day	Maximum for Monthly Average
Metric Units - mg/kg of concentrate digested English Units - lbs/million lbs of concentrate digested		
Antimony	1.200	0.535
Arsenic	0.865	0.386
Cadmium	0.124	0.050
Chromium	0.230	0.093
Copper	0.796	0.379
*Lead	0.174	0.081
Nickel	0.342	0.230
Selenium	0.510	0.230
Thallium	0.871	0.379
*Zinc	0.635	0.261
*Ammonia (as N)	82.910	36.450
*Fluoride	21.770	12.440

(b) Solvent Extraction Raffinate PSES PSES

Pollutant or Pollutant Property	Maximum for Any One Day	Maximum for Monthly Average
Metric Units - mg/kg of concentrate digested English Units - lbs/million lbs of concentrate digested		
Antimony	17.670	7.873
Arsenic	12.730	5.676
Cadmium	1.831	0.732
Chromium	3.387	1.373
Copper	11.720	5.585
*Lead	2.563	1.190
Nickel	5.035	3.387
Selenium	7.507	3.387
Thallium	12.820	5.585
*Zinc	9.338	3.845
*Ammonia (as N)	1221.000	536.500
*Fluoride	320.400	183.100

TABLE XII-3 (Continued)

PSES FOR THE PRIMARY COLUMBIUM-TANTALUM SUBCATEGORY

(c) Solvent Extraction Wet Air Pollution Control PSES

Pollutant or Pollutant Property	Maximum for Any One Day	Maximum for Monthly Average
Metric Units - mg/kg of concentrate digested English Units - lbs/million lbs of concentrate digested		
Antimony	0.475	0.212
Arsenic	0.342	0.153
Cadmium	0.049	0.020
Chromium	0.091	0.037
Copper	0.315	0.150
*Lead	0.069	0.032
Nickel	0.135	0.091
Selenium	0.202	0.091
Thallium	0.344	0.150
*Zinc	0.251	0.103
*Ammonia (as N)	32.790	14.420
*Fluoride	8.610	4.920

(d) Precipitation and Filtration PSES

Pollutant or Pollutant Property	Maximum for Any One Day	Maximum for Monthly Average
Metric Units - mg/kg of concentrate digested English Units - lbs/million lbs of concentrate digested		
Antimony	26.420	11.770
Arsenic	19.030	8.487
Cadmium	2.738	1.095
Chromium	5.065	2.053
Copper	17.520	8.350
*Lead	3.833	1.780
Nickel	7.529	5.065
Selenium	11.230	5.065
Thallium	19.170	8.350
*Zinc	13.960	5.750
*Ammonia (as N)	1825.000	802.200
*Fluoride	479.100	273.800

TABLE XII-3 (Continued)

PSES FOR THE PRIMARY COLUMBIUM-TANTALUM SUBCATEGORY

(e) Precipitation and Filtration Wet Air Pollution Control PSES

Pollutant or Pollutant Property	Maximum for Any One Day	Maximum for Monthly Average
Metric Units - mg/kg of concentrate digested English Units - lbs/million lbs of concentrate digested		
Antimony	12.260	5.462
Arsenic	8.828	3.938
Cadmium	1.270	0.508
Chromium	2.350	0.953
Copper	8.129	3.874
*Lead	1.778	0.826
Nickel	3.493	2.350
Selenium	5.208	2.350
Thallium	8.891	3.874
*Zinc	6.478	2.668
*Ammonia (as N)	846.600	372.200
*Fluoride	222.300	127.000

(f) Tantalum Salt Drying PSES PSES

Pollutant or Pollutant Property	Maximum for Any One Day	Maximum for Monthly Average
Metric Units - mg/kg of tantalum salt dried English Units - lbs/million lbs of tantalum salt dried		
Antimony	116.800	52.070
Arsenic	84.150	37.540
Cadmium	12.110	4.843
Chromium	22.400	9.081
Copper	77.490	36.930
*Lead	16.950	7.870
Nickel	33.300	22.400
Selenium	49.640	22.400
Thallium	84.760	36.930
*Zinc	61.750	25.430
*Ammonia (as N)	8070.000	3548.000
*Fluoride	2119.000	1211.000

TABLE XII-3 (Continued)

PSES FOR THE PRIMARY COLUMBIUM-TANTALUM SUBCATEGORY

(g) Oxides Calcining Wet Air Pollution Control PSES

Pollutant or Pollutant Property	Maximum for Any One Day	Maximum for Monthly Average
Metric Units - mg/kg of columbium-tantalum oxide dried English Units - lbs/million lbs of columbium-tantalum oxide dried		
Antimony	7.415	3,304
Arsenic	5.340	2.382
Cadmium	0.768	0.307
Chromium	1.442	0.576
Copper	4.918	2.344
*Lead	1.076	0.500
Nickel	2.113	1.422
Selenium	3.150	1.422
Thallium	5.379	2.344
*Zinc	3.919	1.614
*Ammonia (as N)	512.200	225.200
*Fluoride	134.500	76.840

(h) Reduction of Tantalum Salt to Metal PSES

Pollutant or Pollutant Property	Maximum for Any One Day	Maximum for Monthly Average
Metric Units - mg/kg of tantalum salt reduced English Units - lbs/million lbs of tantalum salt reduced		
Antimony	320.500	142.800
Arsenic	230.800	103.000
Cadmium	33.210	13.290
Chromium	61.450	24.910
Copper	212.600	101.300
*Lead	46.500	21.590
Nickel	51.340	61.450
Selenium	136.200	61.450
Thallium	232.500	101.300
*Zinc	169.400	69.750
*Ammonia (as N)	22,140.000	9,732.000
*Fluoride	5,813.000	3,322.000

TABLE XII-3 (Continued)

PSES FOR THE PRIMARY COLUMBIUM-TANTALUM SUBCATEGORY

(i) Reduction of Tantalum Salt to Metal Wet Air Pollution Control PSES

Pollutant or Pollutant Property	Maximum for Any One Day	Maximum for Monthly Average
Metric Units - mg/kg of tantalum salt reduced English Units - lbs/million lbs of tantalum salt reduced		
Antimony	3.943	1.757
Arsenic	2.840	1.267
Cadmium	0.409	0.163
Chromium	0.756	0.306
Copper	2.615	1.246
*Lead	0.572	0.266
Nickel	1.124	0.756
Selenium	1.675	0.756
Thallium	2.860	1.246
*Zinc	2.084	0.858
*Ammonia (as N)	272.400	119.700
*Fluoride	71.510	40.860

(j) Tantalum Powder Wash PSES

Pollutant or Pollutant Property	Maximum for Any One Day	Maximum for Monthly Average
Metric Units - mg/kg of tantalum powder washed English Units - lbs/million lbs of tantalum powder washed		
Antimony	39.440	17.570
Arsenic	28.400	12.670
Cadmium	4.087	1.635
Chromium	7.560	3.065
Copper	26.150	12.460
*Lead	5.721	2.656
Nickel	11.240	7.560
Selenium	16.760	7.560
Thallium	28.610	12.460
*Zinc	20.840	8.582
*Ammonia (as N)	2,724.000	1,198.000
*Fluoride	715.200	408.700

TABLE XII-3 (Continued)

PSES FOR THE PRIMARY COLUMBIUM-TANTALUM SUBCATEGORY

(k) Consolidation and Casting Contact Cooling PSES

Pollutant or Pollutant Property	Maximum for Any One Day	Maximum for Monthly Average
Metric Units - mg/kg of columbium or tantalum cast or consolidated English Units - lbs/million lbs of columbium or tantalum cast or consolidated		
Antimony	0.000	0.000
Arsenic	0.000	0.000
Cadmium	0.000	0.000
Chromium	0.000	0.000
Copper	0.000	0.000
*Lead	0.000	0.000
Nickel	0.000	0.000
Selenium	0.000	0.000
Thallium	0.000	0.000
*Zinc	0.000	0.000
*Ammonia (as N)	0.000	0.000
*Fluoride	0.000	0.000

TABLE XII-4

PSNS FOR THE PRIMARY COLUMBIUM-TANTALUM SUBCATEGORY

(a) Concentrate Digestion Wet Air Pollution Control PSNS

Pollutant or Pollutant Property	Maximum for Any One Day	Maximum for Monthly Average
Metric Units - mg/kg of concentrate digested English Units - lbs/million lbs of concentrate digested		
Antimony	1.200	0.535
Arsenic	0.865	0.386
Cadmium	0.124	0.050
Chromium	0.230	0.093
Copper	0.796	0.379
*Lead	0.174	0.081
Nickel	0.342	0.230
Selenium	0.510	0.230
Thallium	0.871	0.379
*Zinc	0.635	0.261
*Ammonia (as N)	82.910	36.450
*Fluoride	21.770	12.440

(b) Solvent Extraction Raffinate PSNS

Pollutant or Pollutant Property	Maximum for Any One Day	Maximum for Monthly Average
Metric Units - mg/kg of concentrate digested English Units - lbs/million lbs of concentrate digested		
Antimony	17.670	7.873
Arsenic	12.730	5.676
Cadmium	1.831	0.732
Chromium	3.387	1.373
Copper	11.720	5.585
*Lead	2.563	1.190
Nickel	5.035	3.387
Selenium	7.507	3.387
Thallium	12.820	5.585
*Zinc	9.338	3.845
*Ammonia (as N)	1,221.000	536.500
*Fluoride	320.400	183.100

TABLE XII-4 (Continued)

PSNS FOR THE PRIMARY COLUMBIUM-TANTALUM SUBCATEGORY

(c) Solvent Extraction Wet Air Pollution Control PSNS

Pollutant or Pollutant Property	Maximum for Any One Day	Maximum for Monthly Average
Metric Units - mg/kg of concentrate digested English Units - lbs/million lbs of concentrate digested		
Antimony	0.475	0.212
Arsenic	0.342	0.153
Cadmium	0.049	0.020
Chromium	0.091	0.037
Copper	0.315	0.150
*Lead	0.069	0.032
Nickel	0.1353	0.091
Selenium	0.202	0.091
Thallium	0.344	0.150
*Zinc	0.251	0.103
*Ammonia (as N)	32.790	14.420
*Fluoride	8.610	4.920

(d) Precipitation and Filtration PSNS

Pollutant or Pollutant Property	Maximum for Any One Day	Maximum for Monthly Average
Metric Units - mg/kg of concentrate digested English Units - lbs/million lbs of concentrate digested		
Antimony	26.420	11.770
Arsenic	19.030	8.487
Cadmium	2.738	2.053
Chromium	5.065	2.053
Copper	17.522	8.350
*Lead	3.833	1.780
Nickel	7.529	5.065
Selenium	11.230	5.065
Thallium	19.170	8.350
*Zinc	13.960	5.750
*Ammonia (as N)	1,825.000	802.200
*Fluoride	479.100	273.800

TABLE XII-4 (Continued)

PSNS FOR THE PRIMARY COLUMBIUM-TANTALUM SUBCATEGORY

(e) Precipitation and Filtration Wet Air Pollution Control PSNS

Pollutant or Pollutant Property	Maximum for Any One Day	Maximum for Monthly Average
Metric Units - mg/kg of concentrate digested English Units - lbs/million lbs of concentrate digested		
Antimony	12.260	5.462
Arsenic	8.828	3.938
Cadmium	1.270	0.508
Chromium	2.350	0.963
Copper	8.129	3.874
*Lead	1.788	0.826
Nickel	3.493	2.350
Selenium	5.208	2.350
Thallium	8.891	3.874
*Zinc	6.478	2.668
*Ammonia (as N)	846.600	372.200
*Fluoride	222.300	127.000

(f) Tantalum Salt Drying PSNS

Pollutant or Pollutant Property	Maximum for Any One Day	Maximum for Monthly Average
Metric Units - mg/kg of tantalum salt dried English Units - lbs/million lbs of tantalum salt dried		
Antimony	116.800	52.070
Arsenic	84.150	37.540
Cadmium	12.110	4.843
Chromium	22.400	9.081
Copper	77.490	36.930
*Lead	16.950	7.871
Nickel	33.300	22.400
Selenium	49.640	22.400
Thallium	84.760	36.930
*Zinc	61.750	25.430
*Ammonia (as N)	8,070.000	3,548.000
*Fluoride	2,119.000	1,211.000

TABLE XII-4 (Continued)

PSNS FOR THE PRIMARY COLUMBIUM-TANTALUM SUBCATEGORY

(g) Oxides Calcining Wet Air Pollution Control PSNS

Pollutant or Pollutant Property	Maximum for Any One Day	Maximum for Monthly Average
Metric Units - mg/kg of columbium-tantalum oxide dried English Units - lbs/million lbs of columbium-tantalum oxide dried		
Antimony	7.415	3.304
Arsenic	5.340	2.382
Cadmium	0.768	0.307
Chromium	1.422	0.576
Copper	4.918	2.344
*Lead	1.076	0.500
Nickel	2.113	1.422
Selenium	3.150	1.422
Thallium	5.379	2.344
*Zinc	3.919	1.614
*Ammonia (as N)	512.200	225.200
*Fluoride	134.500	76.840

(h) Reduction of Tantalum Salt to Metal PSNS

Pollutant or Pollutant Property	Maximum for Any One Day	Maximum for Monthly Average
Metric Units - mg/kg of tantalum salt reduced English Units - lbs/million lbs of tantalum salt reduced		
Antimony	320.500	142.800
Arsenic	230.800	103.000
Cadmium	33.210	13.290
Chromium	61.450	24.910
Copper	212.600	101.300
*Lead	46.500	21.590
Nickel	91.340	61.450
Selenium	136.200	61.450
Thallium	232.500	101.300
*Zinc	169.400	69.750
*Ammonia (as N)	22,140.000	9,732.000
*Fluoride	5,813.000	3,322.000

TABLE XII-4 (Continued)

PSNS FOR THE PRIMARY COLUMBIUM-TANTALUM SUBCATEGORY

(i) Reduction of Tantalum Salt to Metal Wet Air Pollution Control PSNS

Pollutant or Pollutant Property	Maximum for Any One Day	Maximum for Monthly Average
Metric Units - mg/kg of tantalum salt reduced English Units - lbs/million lbs of tantalum salt reduced		
Antimony	3.943	1.757
Arsenic	2.840	1.267
Cadmium	0.409	0.163
Chromium	0.756	0.306
Copper	2.615	1.246
*Lead	0.572	0.266
Nickel	1.124	0.756
Selenium	1.675	0.756
Thallium	2.860	1.246
*Zinc	2.084	0.858
*Ammonia (as N)	272.400	119.700
*Fluoride	71.510	40.860

(j) Tantalum Powder Wash PSNS

Pollutant or Pollutant Property	Maximum for Any One Day	Maximum for Monthly Average
Metric Units - mg/kg of tantalum powder washed English Units - lbs/million lbs of tantalum powder washed		
Antimony	39.440	17.570
Arsenic	28.400	12.670
Cadmium	4.087	3.065
Chromium	7.560	3.065
Copper	26.150	12.460
*Lead	5.721	2.656
Nickel	11.240	7.560
Selenium	16.760	7.560
Thallium	28.610	12.460
*Zinc	20.840	8.582
*Ammonia (as N)	2,724.000	1,198.000
*Fluoride	715.200	408.700

TABLE XII-4 (Continued)

PSNS FOR THE PRIMARY COLUMBIUM-TANTALUM SUBCATEGORY

(k) Consolidation and Casting Contact Cooling PSNS

Pollutant or Pollutant Property	Maximum for Any One Day	Maximum for Monthly Average
Metric Units - mg/kg of columbium or tantalum cast or consolidated English Units - lbs/million lbs of columbium or tantalum cast or consolidated		
Antimony	0.000	0.000
Arsenic	0.000	0.000
Cadmium	0.000	0.000
Chromium	0.000	0.000
Copper	0.000	0.000
*Lead	0.000	0.000
Nickel	0.000	0.000
Selenium	0.000	0.000
Thallium	0.000	0.000
*Zinc	0.000	0.000
*Ammonia (as N)	0.000	0.000
*Fluoride	0.000	0.000

SECTION XIII

BEST CONVENTIONAL POLLUTANT CONTROL TECHNOLOGY

EPA is not promulgating best conventional pollutant control technology (BCT) for the primary columbium-tantalum subcategory at this time.

THIS PAGE INTENTIONALLY LEFT BLANK

NONFERROUS METALS MANUFACTURING POINT SOURCE CATEGORY

DEVELOPMENT DOCUMENT SUPPLEMENT

for the

Secondary Tantalum Subcategory

William K. Reilly
Administrator

Rebecca Hanmer
Acting Assistant Administrator for Water

Martha Prothro, Director
Office of Water Regulations and Standards

Thomas P. O'Farrell, Director
Industrial Technology Division

Ernst P. Hall, P.E., Chief
Metals Industry Branch
and
Technical Project Officer

May 1989

U.S. Environmental Protection Agency
Office of Water
Office of Water Regulations and Standards
Industrial Technology Division
Washington, D. C. 20460

4527

TABLE OF CONTENTS

Section		Page
I	SUMMARY	4535
II	CONCLUSIONS	4537
III	SUBCATEGORY PROFILE	4545
	Description of Secondary Tantalum Production	4545
	Raw Materials	4545
	Acid Leaching	4545
	Washing and Rinsing	4546
	Process Wastewater Sources	4546
	Other Wastewater Sources	4547
	Age, Production, and Process Profile	4547
IV	SUBCATEGORIZATION	4553
	Factors Considered in Subdividing the Secondary Tantalum Subcategory	4553
	Other Factors	4554
	Production Normalizing Parameters	4554
V	WATER USE AND WASTEWATER CHARACTERISTICS	4557
	Wastewater Flow Rates	4558
	Wastewater Characteristics Data	4558
	Data Collection Portfolios	4559
	Field Sampling Data	4559
	Wastewater Characteristics and Flows by Subdivision	4560
	Tantalum Alloy Leach and Rinse	4561
	Capacitor Leach and Rinse	4561
	Tantalum Sludge Leach and Rinse	4561
	Tantalum Powder Acid Wash and Rinse	4562
	Leaching Wet Air Pollution Control	4562

TABLE OF CONTENTS (Continued)

Section		Page
VI	SELECTION OF POLLUTANT PARAMETERS	4587
	Conventional and Nonconventional Pollutant Parameters Selected	4587
	Toxic Pollutants	4588
	Toxic Pollutants Never Detected	4588
	Toxic Pollutants Never Found Above Their Analytical Quantification Concentration	4588
	Toxic Pollutants Present Below Concentration Achievable by Treatment	4588
	Toxic Pollutants Selected for Further Consideration in Establishing Limitations and Standards	4589
VII	CONTROL AND TREATMENT TECHNOLOGIES	4595
	Current Control and Treatment Practices	4595
	Tantalum Alloy Leach and Rinse	4595
	Capacitor Leach and Rinse	4596
	Tantalum Sludge Leach and Rinse	4596
	Tantalum Powder Acid Wash and Rinse	4596
	Leaching Wet Air Pollution Control	4596
	Control and Treatment Options	4596
	Option A	4597
	Option C	4597
VIII	COSTS, ENERGY, AND NONWATER QUALITY ASPECTS	4599
	Treatment Options for Existing Sources	4599
	Option A	4599
	Option C	4599
	Cost Methodology	4599
	Energy Requirements	4600
	Solid Waste	4600
	Air Pollution	4601

TABLE OF CONTENTS (Continued)

Section		Page
IX	BEST PRACTICABLE CONTROL TECHNOLOGY CURRENTLY AVAILABLE	4603
	Technical Approach to BPT	4603
	Industry Cost and Pollutant Removal Estimates	4605
	BPT Option Selection	4605
	Wastewater Discharge Rates	4605
	Tantalum Alloy Leach and Rinse	4606
	Capacitor Leach and Rinse	4606
	Tantalum Sludge Leach and Rinse	4606
	Tantalum Powder Acid Wash and Rinse	4606
	Leaching Wet Air Pollution Control	4606
	Regulated Pollutant Parameters	4607
	Effluent Limitations	4607
X	BEST AVAILABLE TECHNOLOGY ECONOMICALLY ACHIEVABLE	4613
	Technical Approach to BAT	4613
	Pollutant Removal Estimates	4613
	Compliance Costs	4613
	BAT Option Selection - Proposal	4614
	BAT Option Selection - Promulgation	4615
	Wastewater Discharge Rates	4615
	Regulated Pollutant Parameters	4615
	Effluent Limitations	4616
XI	NEW SOURCE PERFORMANCE STANDARDS	4627
	Technical Approach to NSPS	4627
	NSPS Option Selection - Proposal	4627
	NSPS Option Selection - Promulgation	4628
	Regulated Pollutant Parameters	4628
	New Source Performance Standards	4628
XII	PRETREATMENT STANDARDS	4633
	Technical Approach to Pretreatment	4633
	Pretreatment Standards for New Sources	4634
	PSNS Option Selection - Proposal	4634
	PSNS Option Selection - Promulgation	4634
	Regulated Pollutant Parameters	4634
	Pretreatment Standards	4635
XIII	BEST CONVENTIONAL POLLUTANT CONTROL TECHNOLOGY	4641

LIST OF TABLES

Table	Title	Page
III-1	Initial Operating Year (Range) Summary of Plants in the Secondary Tantalum Subcategory by Discharge Type	4548
III-2	Production Ranges for the Secondary Tantalum Subcategory	4548
III-3	Summary of Secondary Tantalum Subcategory Processes and Associated Waste Streams	4549
V-1	Water Use and Discharge Rates for Tantalum Alloy Leach and Rinse	4563
V-2	Water Use and Discharge Rates for Capacitor Leach and Rinse	4563
V-3	Water Use and Discharge Rates for Tantalum Sludge Leach and Rinse	4563
V-4	Water Use and Discharge Rates for Tantalum Powder Acid Wash and Rinse	4564
V-5	Water Use and Discharge Rates for Leaching Wet Air Pollution Control	4564
V-6	Secondary Tantalum Sampling Data Waste Acid from Tantalum Leaching Raw Wastewater	4565
V-7	Secondary Tantalum Sampling Data Filtrate from NH_4OH Precipitation of Tantalum Raw Wastewater	4569
V-8	Secondary Tantalum Sampling Data Sump Number 2 Effluent Raw Wastewater	4573
V-9	Secondary Tantalum Sampling Data Sump Number 3 Effluent Raw Wastewater	4577
V-10	Secondary Tantalum Sampling Data Treated Effluent	4581
V-11	Secondary Tantalum Sampling Data Raw Wastewater from Self-Sampling Program	4585

LIST OF TABLES (Continued)

Table	Title	Page
VI-1	Frequency of Occurrence of Priority Pollutants Secondary Tantalum Subcategory Raw Wastewater	4590
VI-2	Toxic Pollutants Never Detected	4592
VIII-1	Cost of Compliance for the Secondary Tantalum Subcategory Direct Dischargers	4592
IX-1	BPT Wastewater Discharge Rates for the Secondary Tantalum Subcategory	4608
IX-2	BPT Mass Limitations for the Secondary Tantalum Subcategory	4609
X-1	Pollutant Removal Estimates for Direct Dischargers	4618
X-2	Cost of Compliance for the Secondary Tantalum Subcategory	4619
X-3	BAT Wastewater Discharge Rates for the Secondary Tantalum Subcategory	4620
X-4	BAT Mass Limitations for the Secondary Tantalum Subcategory	4621
XI-1	NSPS Wastewater Discharge Rates for the Secondary Tantalum Subcategory	4629
XI-2	NSPS for the Secondary Tantalum Subcategory	4630
XII-1	PSNS Wastewater Discharge Rates for the Secondary Tantalum Subcategory	4636
XII-2	PSNS for the Secondary Tantalum Subcategory	4637

LIST OF FIGURES

Figure	Title	Page
III-1	Secondary Tantalum Production Processes	4550
III-2	Geographic Locations of the Secondary Tantalum Subcategory Plants	4551
V-1	Sampling Sites at Secondary Tantalum Plant A	4586
IX-1	BPT Treatment Scheme for the Secondary Tantalum Subcategory	4612
X-1	BAT Treatment Scheme for Option A	4624
X-2	BAT Treatment Scheme for Option C	4625

SECTION I

SUMMARY AND CONCLUSIONS

This document provides the technical basis for promulgating effluent limitations based on best practicable technology (BPT) and best available technology (BAT) for existing direct dischargers, pretreatment standards for new indirect dischargers (PSNS), and standards of performance for new source direct dischargers (NSPS).

The secondary tantalum subcategory consists of three plants. All three plants treat their process wastewater and discharge the effluent directly to rivers or streams.

EPA first studied the secondary tantalum subcategory to determine whether differences in raw materials, final products, manufacturing processes, equipment, age and size of plants, or water usage, required the development of separate effluent limitations and standards for different segments of the subcategory. This involved a detailed analysis of wastewater discharge and treated effluent characteristics, including the sources and volume of water used, the processes used, the sources of pollutants and wastewaters in the plant, and the constituents of wastewaters, including priority pollutants. As a result, five subdivisions have been identified for this subcategory that warrant separate effluent limitations. These are:

- Tantalum alloy leach and rinse,
- Capacitor leach and rinse,
- Tantalum sludge leach and rinse,
- Tantalum powder acid wash and rinse, and
- Leaching wet air pollution control.

EPA also identified several distinct control and treatment technologies (both in-plant and end-of-pipe) applicable to the secondary tantalum subcategory. The Agency analyzed both historical and newly generated data on the performance of these technologies, including their nonwater quality environmental impacts and air quality, solid waste generation, and energy requirements. EPA also studied various flow reduction techniques reported in the data collection portfolios (dcp) and plant visits.

Engineering costs were prepared for each of the control and treatment options considered for the subcategory. These costs were then used by the Agency to estimate the impact of implementing the various options on the subcategory. For each control and treatment option that the Agency found to be most effective and technically feasible in controlling the discharge of pollutants, we estimated the number of potential closures, number of employees affected, and impact on price. These results are reported in a separate document entitled "The Economic Impact

Analysis of Effluent Limitations and Standards for the Nonferrous Metals Manufacturing Industry."

After examining the various treatment technologies, the Agency has identified BPT to represent the average of the best existing technology. Metals removal based on chemical precipitation and sedimentation technology (lime and settle) is the basis for the BPT limitations. To meet the BPT effluent limitations based on this technology, the secondary tantalum subcategory is expected to incur an estimated capital cost of $6,462 and an annual cost of $58,854.

For BAT, filtration is added as an effluent polishing step to the BPT end-of-pipe treatment scheme. To meet the BAT effluent limitations based on this technology, the secondary tantalum subcategory is estimated to incur a capital cost of $13,474 and an annual cost of $63,466.

New source performance standards are equivalent to BAT. In selecting NSPS, EPA recognizes that new plants have the opportunity to implement the best and most efficient manufacturing processes and treatment technology. As such, the technology basis of BAT has been determined as the best demonstrated technology.

PSES is not being promulgated for this subcategory because there are no existing indirect dischargers in the secondary tantalum subcategory. For PSNS, the Agency selected end-of-pipe treatment techniques equivalent to BAT.

The best conventional technology (BCT) replaces 8AT for the control of conventional pollutants. BCT is not being promulgated at this time because the methodology for BCT has not yet been finalized.

The mass limitations and standards for BPT, BAT. NSPS, and PSNS are presented in Section II.

SECTION II

CONCLUSIONS

EPA has divided the secondary tantalum subcategory into five subdivisions for the purpose of effluent limitations and standards. These subdivisions are:

(a) Tantalum alloy leach and rinse,
(b) Capacitor leach and rinse,
(c) Tantalum sludge leach and rinse,
(d) Tantalum powder acid wash and rinse, and
(e) Leaching wet air pollution control.

BPT is promulgated based on the performance achievable by the application of chemical precipitation and sedimentation technology. The following BPT effluent limitations are promulgated:

(a) Tantalum Alloy Leach and Rinse BPT

Pollutant or Pollutant Property	Maximum for Any One Day	Maximum for Monthly Average
mg/kg (lb/million lbs) of tantalum powder produced		
Copper	438.100	230.600
Lead	96.850	46.120
Nickel	442.800	292.900
Zinc	336.700	140.700
Tantalum	103.800	
TSS	9,455.000	4,497.000
pH	Within the range of 7.5 to 10.0 at all times	

(b) Capacitor Leach and Rinse BPT

Pollutant or Pollutant Property	Maximum for Any One Day	Maximum for Monthly Average
mg/kg (lb/million lbs) of tantalum powder produced from leaching		
Copper	38.380	20.200
Lead	8.484	4.040
Nickel	38.780	25.650
Zinc	29.490	12.320
Tantalum	9.090	
TSS	828.200	393.900
pH	Within the range of 7.5 to 10.0 at all times	

(c) Tantalum Sludge Leach and Rinse BPT

Pollutant or Pollutant Property	Maximum for Any One Day	Maximum for Monthly Average
mg/kg (lb/million lbs) of equivalent pure tantalum powder produced		
Copper	390.100	205.300
Lead	86.230	41.060
Nickel	394.200	260.700
Zinc	299.700	125.200
Tantalum	92.390	
TSS	8,417.000	4,003.000
pH	Within the range of 7.5 to 10.0 at all times	

(d) Tantalum Powder Acid Wash and Rinse BPT

Pollutant or Pollutant Property	Maximum for Any One Day	Maximum for Monthly Average
mg/kg (lb/million lbs) of tantalum powder produced		
Copper	0.665	0 350
Lead	0.147	0.070
Nickel	0 672	0.445
Zinc	0.511	0.214
Tantalum	0.158	
TSS	14.350	6.825
pH	Within the range of 7.5 to 10.0 at all times	

(e) Leaching Wet Air Pollution Control

Pollutant or Pollutant Property	Maximum for Any One Day	Maximum for Monthly Average
mg/kg (lb/million lbs) of equivalent pure tantalum powder produced		
Copper	9.272	4.880
Lead	2.050	0.976
Nickel	9.370	6.198
Zinc	7.125	2.977
Tantalum	2.196	
TSS	200.100	95.160
pH	Within the range of 7.5 of 10.0 at all times	

BAT is promulgated based on the performance achievable by the application of chemical precipitation, sedimentation, and multimedia filtration technology. The following BAT effluent limitations are promulgated:

(a) Tantalum Alloy Leach and Rinse BAT

Pollutant or Pollutant Property	Maximum for Any One Day	Maximum for Monthly Average
mg/kg (lb/million lbs) of tantalum powder produced		
Copper	295.200	140.700
Lead	64.570	29.980
Nickel	126.800	85.320
Zinc	235.200	96.850
Tantalum	103.800	

(b) Capacitor Leach and Rinse BAT

Pollutant or Pollutant Property	Maximum for Any One Day	Maximum for Monthly Average
mg/kg (lb/million lbs) of tantalum powder produced from leaching		
Copper	25.860	12.320
Lead	5.656	2.626
Nickel	11.110	7.474
Zinc	20.600	8.484
Tantalum	9.090	

(c) Tantalum Sludge Leach and Rinse BAT

Pollutant or Pollutant Property	Maximum for Any One Day	Maximum for Monthly Average
mg/kg (lb/million lbs) of equivalent pure tantalum powder produced		
Copper	262.800	125.200
Lead	57.480	26.690
Nickel	112.900	75.960
Zinc	209.400	86.230
Tantalum	92.390	

(d) Tantalum Powder Acid Wash and Rinse BAT

Pollutant or Pollutant Property	Maximum for Any One Day	Maximum for Monthly Average
mg/kg (lb/million lbs) of tantalum powder produced		
Copper	0.448	0.214
Lead	0.098	0.046
Nickel	0.193	0.130
Zinc	0.357	0.147
Tantalum	0.158	

(e) Leaching Wet Air Pollution Control BAT

Pollutant or Pollutant Property	Maximum for Any One Day	Maximum for Monthly Average
mg/kg (lb/million lbs) of equivalent pure tantalum powder produced		
Copper	6.246	2.977
Lead	1.366	0.634
Nickel	2.684	1.806
Zinc	4.978	2.050
Tantalum	2.196	

NSPS are promulgated based on the performance achievable by the application of chemical precipitation, sedimentation, and multimedia filtration technology The following effluent standards are promulgated for new sources:

(a) Tantalum Alloy Leach and Rinse NSPS

Pollutant or Pollutant Property	Maximum for Any One Day	Maximum for Monthly Average
mg/kg (lb/million lbs) of tantalum powder produced		
Copper	295.200	120.700
Lead	64.570	29.980
Nickel	126.800	85.320
Zinc	235.200	96.850
Tantalum	103.800	
TSS	3,459.000	2,767.000
pH	Within the range of 7.5 to 10.0 at all times	

(b) Capacitor Leach and Rinse NSPS

Pollutant or Pollutant Property	Maximum for Any One Day	Maximum for Monthly Average
mg/kg (lb/million lbs) of tantalum powder produced from leaching		
Copper	25.860	12.320
Lead	5.656	2.626
Nickel	11.110	7.474
Zinc	20.600	8.484
Tantalum	9.090	
TSS	303.000	242.400
pH	Within the range of 7.5 to 10.0 at all times	

(c) Tantalum Sludge Leach and Rinse NSPS

Pollutant or Pollutant Property	Maximum for Any One Day	Maximum for Monthly Average
mg/kg (lb/million lbs) of equivalent pure tantalum powder produced		
Copper	262.800	125.200
Lead	57.480	26.690
Nickel	112.900	75.960
Zinc	209.400	86.230
Tantalum	92.390	
TSS	3,080.000	2,464.000
pH	Within the range of 7.5 to 10.0 at all times	

(d) Tantalum Powder Acid Wash and Rinse NSPS

Pollutant or Pollutant Property	Maximum for Any One Day	Maximum for Monthly Average
mg/kg (lb/million lbs) of tantalum powder produced		
Copper	0.448	0.214
Lead	0.098	0.046
Nickel	0.193	0.130
Zinc	0.357	0.147
Tantalum	0.15	
TSS	5.250	4.200
pH	Within the range of 7.5 to 10.0 at all times	

(e) Leaching Wet Air Pollution Control NSPS

Pollutant or Pollutant Property	Maximum for Any One Day	Maximum for Monthly Average
mg/kg (lb/million lbs) of equivalent pure tantalum powder produced		
Copper	6.246	2.977
Lead	1.366	0.634
Nickel	2.684	1.806
Zinc	4.978	2.050
Tantalum	2.196	
TSS	73.200	58.560
pH	Within the range of 7.5 to 10.0 at all times	

PSES are not being promulgated for the secondary tantalum subcategory at this time because there are no existing indirect dischargers in the secondary tantalum subcategory.

PSNS are promulgated based on the performance achievable by the application of chemical precipitation, sedimentation, and multimedia filtration technology. The following pretreatment standards are promulgated for new sources:

(a) Tantalum Alloy Leach and Rinse PSNS

Pollutant or Pollutant Property	Maximum for Any One Day	Maximum for Monthly Average
mg/kg (lb/million lbs) of tantalum powder produced		
Copper	295.200	140.700
Lead	64.570	29.980
Nickel	126.800	85.320
Zinc	235.200	96.850
Tantalum	103.800	

(b) Capacitor Leach and Rinse PSNS

Pollutant or Pollutant Property	Maximum for Any One Day	Maximum for Monthly Average
mg/kg (lb/million lbs) of tantalum powder produced from leaching		
Copper	25.860	12.320
Lead	5.656	2.626
Nickel	11.110	7.474
Zinc	20.600	8.484
Tantalum	9.090	

(c) Tantalum Sludge Leach and Rinse PSNS

Pollutant or Pollutant Property	Maximum for Any One Day	Maximum for Monthly Average
mg/kg (lb/million lbs) of equivalent pure tantalum powder produced		
Copper	262.800	125.200
Lead	57.480	26.690
Nickel	112.900	75.960
Zinc	209.400	86.230
Tantalum	92.390	

(d) Tantalum Powder Acid Wash and Rinse PSNS

Pollutant or Pollutant Property	Maximum for Any One Day	Maximum for Monthly Average
mg/kg (lb/million lbs) of tantalum powder produced		
Copper	0.448	0.214
Lead	0.098	0.046
Nickel	0.193	0.130
Zinc	0.357	0.147
Tantalum	0.158	

(e) Leaching Wet Air Pollution Control PSNS

Pollutant or Pollutant Property	Maximum for Any One Day	Maximum for Monthly Average
mg/kg (lb/million lbs) of equivalent pure tantalum powder produced		
Copper	6.246	2.977
Lead	1.366	0.634
Nickel	2.684	1.806
Zinc	4.978	2.050
Tantalum	2.196	

EPA is not promulgating BCT at this time for the secondary tantalum subcategory.

SECTION III

INDUSTRY PROFILE

This section of the secondary tantalum supplement describes the raw materials and processes used in producing secondary tantalum and presents a profile of the secondary tantalum plants identified in this study.

The present uses of tantalum stem from three important properties; a high melting point, resistance to corrosive agents, and dielectric properties. Tantalum mill products such as sheet are made into corrosion resistant chemical equipment. heat exchangers, reaction vessels and other equipment that can withstand high temperatures and severe acid environments. Tantalum has been used in surgical applications such as surgical implants and suture wire because it is inert to body fluids and tissue. The electronic industry has many applications for tantalum, primarily in capacitors. Tantalum capacitors provide higher volumetric capacitance efficiency than other capacitor materials, and function well at high and low temperatures. Alloying with tantalum produces alloys with good high temperature strength that have applications in aerospace products. Tantalum alloys also have favorable fabricating characteristics.

DESCRIPTION OF SECONDARY TANTALUM PRODUCTION

Secondary tantalum production methods vary from time to time and from plant to plant primarily because of the different raw materials that may be used in the process. Basically, acid leaching is used to dissolve metal impurities in the raw material leaving behind an upgraded tantalum product. In the following sections the variations to this fundamental operation will be described. Figure III-1 (page 4550) presents a flow diagram for the secondary tantalum production processes.

RAW MATERIALS

The plants presently producing secondary tantalum use three types of raw materials: alloy scrap, scrap tantalum-bearing electrical components, and tantalum-bearing sludge. Stamping operations are the primary source of raw materials for one plant which uses alloy scrap as a raw material.

ACID LEACHING

Different types of acid leaching processes are used depending on the raw material being processed. Scrap alloy is immersed in a nitric acid bath and the spent acid is discharged in a batch flow. This waste stream contains high concentrations of dissolved metals, the constituents depending upon the make-up of the scrap alloy.

Electrical components such as capacitors are acid leached in a batch process. The acid which may be a combination of hydrochloric, nitric and sulfuric, is poured into a rotating digestor filled with tantalum-bearing scrap. Leaching in the digestor continues until the acid is spent. usually about two days per batch. The spent acid is then discharged as a waste stream along with rinse water, and the digestor is filled with fresh acid. This procedure is repeated up to 15 times depending on the amount of materials to be leached from each batch of scrap.

Recovering tantalum from sludge involves a series of acid leaches, and may sometimes include caustic leaching depending on the materials present in the sludge. The recovery of other valuable materials from tantalum-bearing sludges may determine how the leaching steps are done. After each leaching step, the more pure tantalum is filtered to separate it from the dissolved impurities. If the filtrate does not contain recoverable material it is combined with rinse water and discharged as a wastewater stream.

One plant practicing acid leaching of tantalum-bearing sludges reported the use of a wet air pollution control device on the leaching vessel. A wastewater stream is discharged from this device.

WASHING AND RINSING

The washing and rinsing operations employed are dependent upon the form of the product recovered and on the desired purity of the end product. When processing scrap tantalum alloys, a water rinse is employed on a continuous once-through basis. Rinsing is performed after completing the acid leaching step for a batch of scrap alloy. Water use is determined by the amount of product to be washed. The tantalum alloy scrap wash water, combined with acid leachate constitutes a waste stream.

Tantalum metal product derived from electrical components is also rinsed and acid washed in batch operations. An acid wash is used to polish the purified metal powder by removing any residual surface oxides from the metal. A water rinse follows which washes away any residual acid. This waste stream may be pretreated to recover dissolved tantalum before routing to wastewater treatment.

Water is used to wash the upgraded tantalum solids to remove all acid prior to the next leaching operation. Filtering is used to retain the upgraded tantalum while separating the liquid fraction. If the filtrate contains recoverable materials, both the filtrate and the wash water are routed to the recovery operation. Otherwise, both flows are routed to wastewater treatment.

PROCESS WASTEWATER SOURCES

Although two fundamental processes are involved in secondary tantalum production, variations in raw materials and specific procedures require that the process wastewater sources be subdivided as follows:

(a) Tantalum alloy leach and rinse,
(b) Capacitor leach and rinse
(c) Tantalum sludge leach and rinse,
(d) Tantalum powder acid wash and rinse and
(e) Leaching wet air pollution control.

OTHER WASTEWATER SOURCES

There may be other wastewater streams associated with the secondary tantalum subcategory. These wastewaters may include stormwater runoff, and maintenance and cleanup water. These waste streams are not considered as a part of this rulemaking. EPA believes that the flows and pollutant loadings associated with these waste streams are insignificant relative to the waste streams selected and are best handled by the appropriate permit authority on a case-by-case basis under authority of Section 403 of the Clean Water Act.

AGE, PRODUCTION AND PROCESS PROFILE

Figure III-2 (page 4551) shows the location of the three secondary tantalum plants currently operating in the United States. All three plants are located in the eastern part of the United States.

Table III-1 (page 4548) shows the relative age and discharge status of the tantalum plants. All three plants are direct dischargers and all were built prior to World War II. From Table III-2 (page 4548) it can be seen that secondary tantalum production is not done on a large scale, and production at each plant varies.

Table III-3 (page 4549) provides a summary of the number of plants generating wastewater for the waste streams associated with various processes and the number of plants with the process.

TABLE III-1

INITIAL OPERATING YEAR (RANGE) SUMMARY OF PLANTS
IN THE SECONDARY TANTALUM SUBCATEGORY BY DISCHARGE TYPE

Type of Plant	Initial Operating Year (Range) (Plant Age in Years) 1983-1944 (1-40)	1943-1934 (41-50)	1933-1904 (51-80)	Before 1904 (80+)	Total
Direct	0	1	1	1	3
Indirect	0	0	0	0	0
Zero	0	0	0	0	0
Total	0	1	1	1	3

TABLE III-2

PRODUCTION RANGES FOR THE SECONDARY TANTALUM SUBCATEGORY

Plant Type	Tantalum Production Ranges for 1982 0-8 tons/yr	9-17 tons/yr	18-26 tons/yr	Total Number of Plants
Direct	1	1	1	3
Indirect	0	0	0	0
Zero	0	0	0	0

Table III-3

SUMMARY OF SECONDARY TANTALUM SUBCATEGORY PROCESSES
AND ASSOCIATED WASTE STREAMS

Process	Number of Plants With Process	Number of Plants Reporting Generation of Wastewater*
Acid Leaching	3	
Tantalum Alloy Leach and Rinse	1	1
Capacitor Leach and Rinse	1	1
Tantalum Sludge Leach and Rinse	1	1
Leaching Wet Air Pollution Control	1	1
Washing and Rinsing	1	
Tantalum Powder Acid Wash and Rinse	1	1

*Through reuse or evaporation practices, a plant may "generate" wastewater from a particular process but not discharge it.

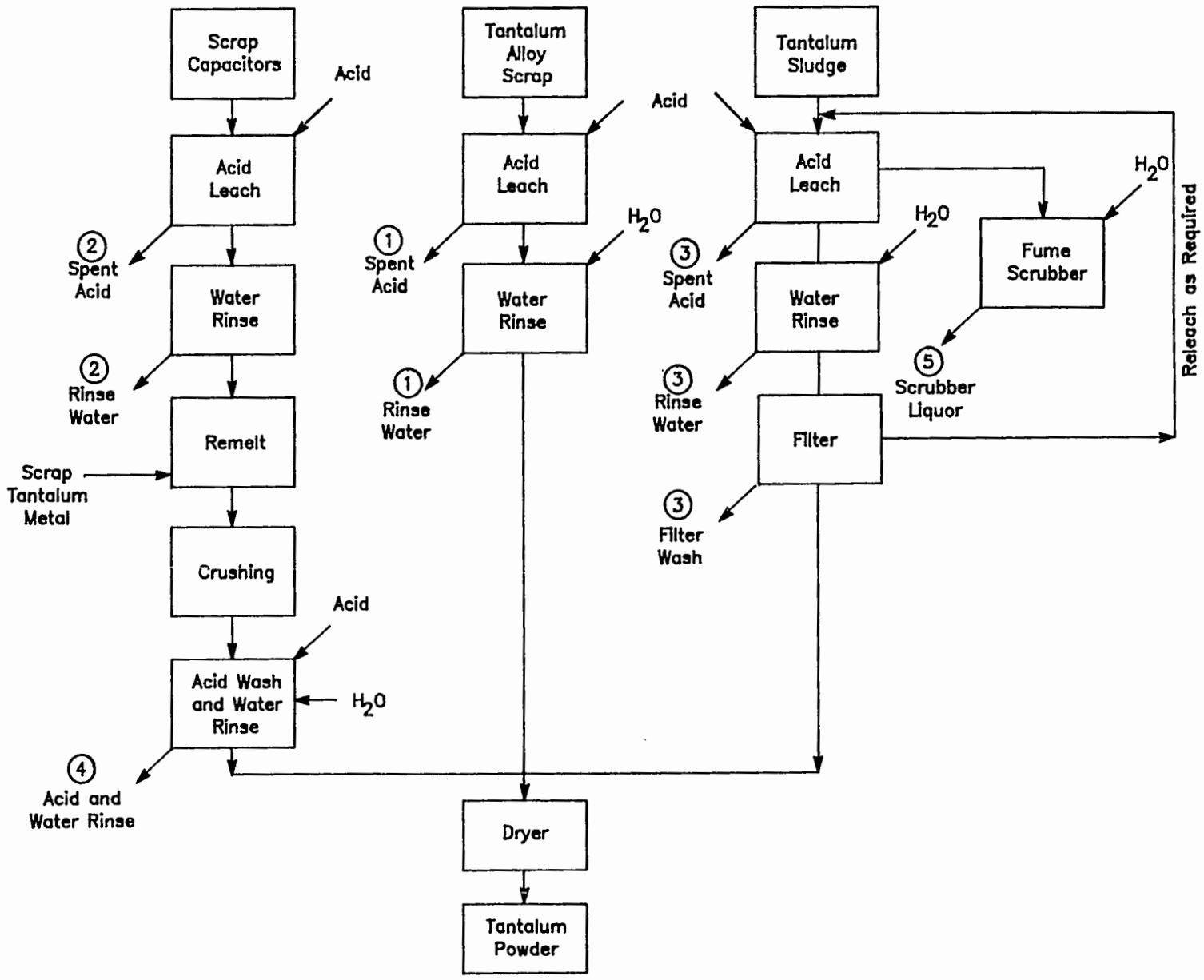

Figure III–1
SECONDARY TANTALUM PRODUCTION PROCESSES

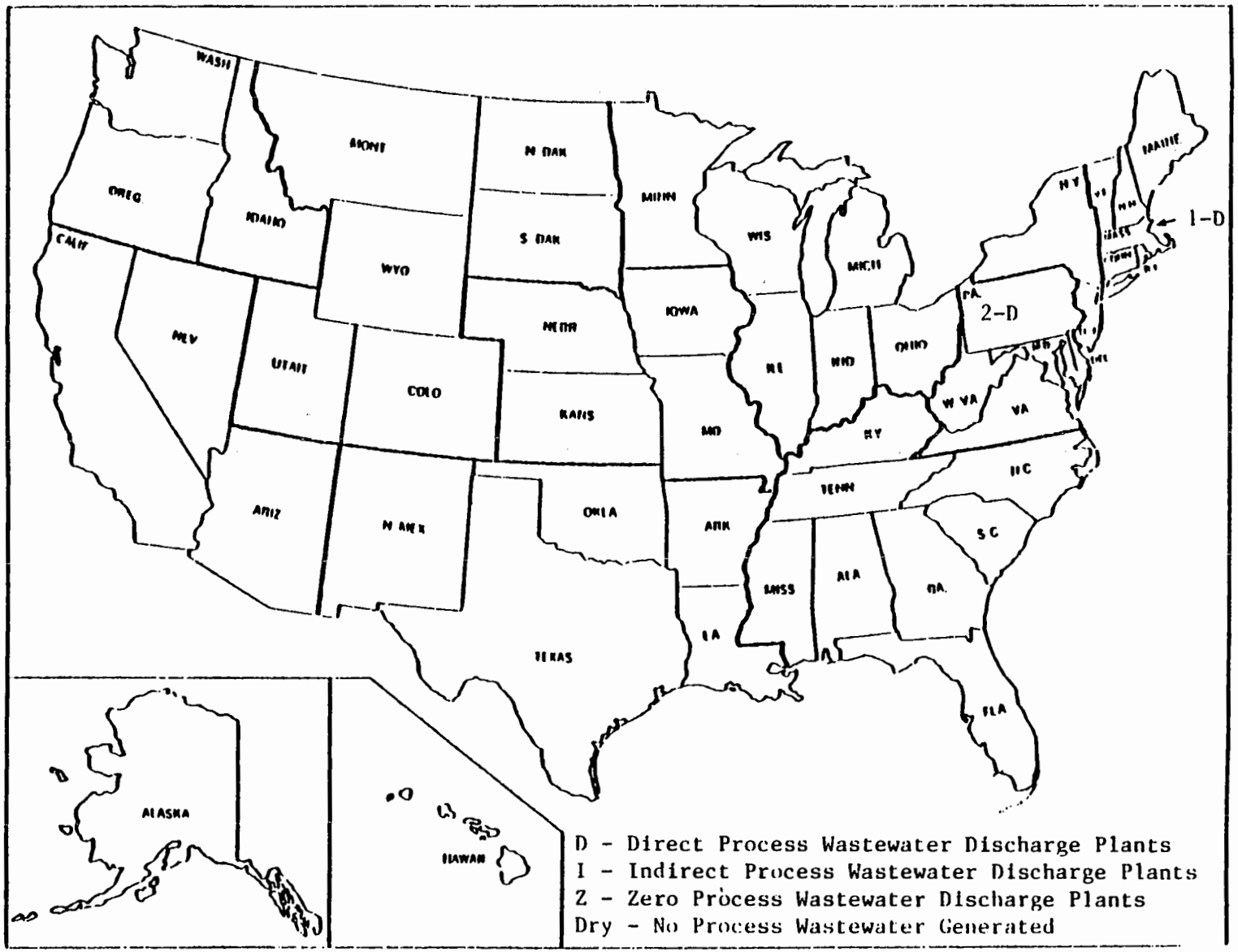

Figure III-2

GEOGRAPHIC LOCATIONS OF THE SECONDARY TANTALUM SUBCATEGORY PLANTS

THIS PAGE INTENTIONALLY LEFT BLANK

SECTION IV

SUBCATEGORIZATION

This section summarizes the factors considered during the designation of the related subdivisions of the secondary tantalum subcategory. Production normalizing parameters for each subdivision are also discussed.

FACTORS CONSIDERED IN SUBDIVIDING THE SECONDARY TANTALUM SUBCATEGORY

The factors listed previously for general subcategorization were each evaluated when considering subdivision of the secondary tantalum subcategory. In the discussion that follows, the factors will be described as they pertain to this particular subcategory.

The rationale for considering further subdivision of the secondary tantalum subcategory is based primarily on differences in the production processes and raw materials used. Within this subcategory, different operations are performed which may or may not have a water use or discharge, and which may require the establishment of separate effluent limitations. While secondary tantalum is still considered a single subcategory, a more thorough examination of the production processes has illustrated the need for limitations and standards based on specific flow allowances for the following subdivisions:

(a) Tantalum alloy leach and rinse,
(b) Capacitor leach and rinse,
(c) Tantalum sludge leach and rinse,
(d) Tantalum powder acid wash and rinse, and
(e) Leaching wet air pollution control.

The following discussion is intended to clarify and support the reasons given above for subdividing the secondary tantalum subcategory.

Secondary tantalum production can be generally described as consisting of acid leaching of raw materials followed by water rinsing and drying of the final tantalum powder product. Variations of this process are due to differences in raw materials. Such factors account for the first three subdivisions listed above. A discussion of each subdivision follows.

Tantalum alloy scrap may be used as a raw material. This scrap is generated in forming operations in which a tantalum-containing alloy is rolled and stamped. The remaining metal skeleton is the raw material for the acid leaching process. Leaching is done in a batch mode by immersing the scrap in acid. Spent acid is discharged as a waste stream.

Scrap electrical components containing tantalum may be used as a

raw material. These components, predominantly capacitors, may have plastic parts and be diverse in composition. Successive acid leaching of batches of raw material is done in rotating digestors. The spent acid is discharged after each cycle. The process is complete when all impurities have been leached away, leaving only the tantalum product.

Tantalum-bearing sludges may used as a raw material for secondary tantalum recovery. The sludge is mixed with acid and acid-soluable impurities are leached away. The residual solids contain upgraded tantalum and are filtered to separate them from the spent acid prior to subsequent purification.

The fourth subdivision arises from an additional purification step that one plant includes in its production operations. After remelting leached tantalum powder and solid tantalum scrap to separate impurities, the tantalum product is crushed to a powder and washed with acid. The acid wash removes surface oxides from the tantalum powder resulting in a higher grade powder product.

The fifth subdivision accounts for wet scrubbers used to control emissions from acid leaching operations. Acid fume generation from the leaching of raw materials is a function of the type of processes used by individual plants. In this subcategory, only one plant uses a wet scrubber to control acid fumes from leaching operations.

OTHER FACTORS

The other factors considered in this evaluation were shown to be inappropriate bases for subdivision. Air pollution control methods, treatment costs, and total energy requirements are functions of the selected subcategorization factors -- metal product, raw materials, and production processes. Therefore, they are not independent factors and do not affect the subcategorization which has been applied. Certain other factors such as plant age, plant size, and the number of employees, were also evaluated and determined to be inappropriate for use as bases for subdivision of this subcategory.

PRODUCTION-NORMALIZING PARAMETERS

As discussed previously, the effluent limitations and standards developed in this document establish mass limitations on the discharge of specific pollutant parameters. To allow these regulations to be applied to plants with various production capacities, the mass of pollutant discharged must be related to a unit of production. This factor is known as the production normalizing parameter (PNP).

In general, for each production process which has a wastewater associated with it, the actual mass of tantalum product or intermediate produced will be used as the PNP. Thus, the PNPs for the five subdivisions or building blocks are as follows:

Building block	PNP
1. Tantalum alloy leach and rinse	tantalum powder produced
2. Capacitor leach and rinse	tantalum powder produced from leaching
3. Tantalum sludge leach and rinse	equivalent pure tantalum powder produced
4. Tantalum powder acid wash and rinse	tantalum powder produced
5. Leaching wet air pollution control	equivalent pure tantalum powder produced

Equivalent pure tantalum powder production was selected as the PNP for subdivisions three and five because the product of leaching tantalum-bearing sludge contains approximately 25 to 30 percent tantalum. Equivalent pure tantalum refers to the weight of tantalum contained in the product.

THIS PAGE INTENTIONALLY LEFT BLANK

SECTION V

WATER USE AND WASTEWATER CHARACTERISTICS

This section describes the characteristics of the wastewaters associated with the secondary tantalum subcategory. Water use and discharge rates are explained and then summarized in tables at the end of this section. Data used to characterize the wastewaters are presented. Finally, the specific source, water use and discharge flows, and wastewater characteristics for each separate wastewater source are discussed.

The two principal data sources were used are data collection portfolios (dcp) and field sampling results. Data collection portfolios completed for each secondary tantalum plant contain information regarding wastewater flows and production levels.

In order to quantify the pollutant discharge from secondary tantalum plants, a field sampling program was conducted. A complete list of the pollutants considered and a summary of the techniques used in sampling and laboratory analyses are included in Section V of Vol. I. Because the analytical standard for TCDD was judged to be too hazardous to be made generally available, samples were never analyzed for this pollutant. Samples were also not analyzed for asbestos. There is no reason to expect that TCDD or asbestos would be present in nonferrous metals manufacturing wastewater. One plant was selected for sampling in the secondary tantalum subcategory. In general, the samples were analyzed for the two classes of pollutants, priority metal pollutants and criteria pollutants (which include both conventional and nonconventional pollutants). Samples were not analyzed for priority organic pollutants because there is no reason to believe that organic pollutants would be present in wastewaters generated by the secondary tantalum subcategory.

After proposal, EPA gathered additional wastewater sampling data for two of the subdivisions in this subcategory. These data were acquired through a self-sampling program which was undertaken at the specific request of the Agency. The data include analyses for the toxic metals antimony, beryllium. cadmium, chromium, copper, lead, nickel, silver, thallium, and zinc. The data also include analyses for the nonconventional pollutant tantalum. These data support the assumptions which EPA had made concerning the presence and concentrations of pollutants in those subdivisions where we did not have analytical data for specific pollutants. For this reason, the selection of pollutant parameters for limitation in this subcategory (Section VI) has not been revised based on this new data.

As described in Section IV of this supplement, the secondary tantalum subcategory has been divided into five subdivisions or wastewater sources, so that the promulgated regulation contains mass discharge limitations and standards for five unit processes discharging process wastewater. Differences in the wastewater

characteristics associated with these subdivisions are to be expected. For this reason, wastewater streams corresponding to each subdivision or building block are addressed separately in the discussions that follow. These wastewater sources are:

(a) Tantalum alloy leach and rinse,
(b) Capacitor leach and rinse,
(c) Tantalum sludge leach and rinse,
(d) Tantalum powder acid wash and rinse, and
(e) Leaching wet air pollution control.

WASTEWATER FLOW RATES

Data supplied by dcp responses were evaluated, and two flow-to-production ratios, water use and wastewater discharge flow, were calculated for each stream. The two ratios are differentiated by the flow value used in calculation. Water use is defined as the volume of water or other fluid required for a given process per mass of tantalum product and is therefore based on the sum of recycle and make-up flows to a given process. Wastewater flow discharged after pretreatment or recycle (if these are present) is used in calculating the production normalized flow -- the volume of wastewater discharged from a given process to further treatment, disposal, or discharge per mass of tantalum produced. Differences between the water use and wastewater flows associated with a given stream result from recycle, evaporation, and carry-over on the product. The production values used in calculation correspond to the production normalizing parameter, PNP, assigned to each stream, as outlined in Section IV. As an example, tantalum powder acid wash and rinse wastewater flow is related to the production of tantalum powder. As such, the discharge rate is expressed in liters of acid wash and rinse wastewater per metric ton of tantalum powder produced (gallons of acid wash and rinse water per ton of tantalum powder).

The production normalized discharge flows were compiled and statistically analyzed by stream type. These production normalized water use and discharge flows are presented by subdivision in Tables V-1 through V-5 (pages 4563 - 4564). Where appropriate, an attempt was made to identify factors that could account for variations in water use and discharge rates. These variations are discussed later in this section by subdivision. A similar analysis of factors affecting the wastewater flows is presented in Sections IX, X, XI, and XII where representative BPT, BAT, NSPS, and pretreatment flows are selected for use in calculating the effluent limitations.

The water use and discharge rates shown do not include nonprocess wastewater, such as rainfall runoff and noncontact cooling water.

WASTEWATER CHARACTERISTICS DATA

Data used to characterize the various wastewaters associated with secondary tantalum production come from two sources -- data collection portfolios and analytical data from field sampling

trips.

DATA COLLECTION PORTFOLIOS

In the data collection portfolios, the secondary tantalum plants that discharge wastewater were asked to specify the presence of priority pollutants in their wastewater. Of the three secondary tantalum plants, one did not respond to this portion of the questionnaire. None of the plants responding to the questionnaire reported the presence of priority organic pollutants. The responses for the priority metals and cyanide are summarized below:

Pollutant	Known Present	Believed Present (Based on Raw Materials and Process Chemicals Used)
Antimony	0	1
Arsenic	0	0
Beryllium	0	0
Cadmium	0	1
Chromium	2	0
Copper	1	1
Cyanide	0	0
Lead	0	0
Mercury	1	0
Nickel	1	1
Selenium	0	0
Silver	0	1
Thallium	0	0
Zinc	1	1

FIELD SAMPLING DATA

In order to quantify the concentrations of pollutants present in wastewater from secondary tantalum plants, wastewater samples were collected at a single plant, which represents one-third of the secondary tantalum plants in the United States, and accounts for 44 percent of all secondary tantalum production. A diagram indicating the sampling sites and contributing production processes is shown in Figure V-1 (page 4586).

Raw wastewater data are summarized in Tables V-6 through V-9 (pages 4565 - 4577). Analytical results for capacitor leach and rinse and tantalum powder acid wash and rinse waste streams are given in Tables V-6 and V-7, respectively. Table V-8 shows analytical results from samples taken from a holding tank (sump) into which the spent acid stream flows, as well as other streams from unrelated plant processes. Table V-9 shows data from a similar type of holding tank (sump) into which the acid wash and water rinse stream flows, along with other unrelated waste streams. Finally, Table V-10 (page 4581) shows the analytical results of the samples taken of the final effluent, after having been treated and prior to discharge to a surface stream. Note that the stream numbers listed in the tables correspond to those

given in the plant sampling site diagram, Figure V-1 (page 4586). Where no data are listed for a specific day of sampling, the wastewater samples for the stream were not collected. Sampling was only done for two classes of pollutants: priority metal pollutants, and criteria pollutants which include both conventional and nonconventional pollutants.

The data tables include some samples measured at concentrations considered not quantifiable. The base-neutral extractable, acid extractable, and volatile organics generally are considered not quantifiable at concentrations equal to or less than 0.010 mg/l. Below this concentration, organic analytical results are not quantitatively accurate; however, the analyses are useful to indicate the presence of a particular pollutant. The pesticide fraction is considered not quantifiable at concentrations equal to or less than 0.005 mg/l.

It should be noted that the detection limits shown on the data tables for priority metals and conventional and nonconventional pollutants are not the same in all cases as the published detection limits for these pollutants by the same analytical methods. The detection limits used were reported with the analytical data and hence are the appropriate limits to apply to the data. Detection limit variation can occur as a result of a number of laboratory-specific, equipment-specific. and daily operator-specific factors. These factors can include day-to-day differences in machine calibration, variation in stock solutions, and variation in operators.

The statistical analysis of data includes some samples measured at concentrations considered not quantifiable. For data considered as detected but below quantifiable concentrations, a value of zero is used for averaging. Priority organic, nonconventional, and conventional pollutant data reported with a "less than" sign are considered as detected, but not further quantifiable. A value of zero is also used for averaging. If a pollutant is reported as not detected, it is assigned a value of zero in calculating the average. Finally, priority metal values reported as less than a certain value were considered as not quantifiable, and consequently were assigned a value of zero in the calculation of the average.

Finally, appropriate source water concentrations are presented with the summaries of the sampling data. The method by which each sample was collected is indicated by number, as follows:

1 one-time grab
2 manual composite during intermittent process operation
3 8-hour manual composite
4 8-hour automatic composite
5 24-hour manual composite
6 24-hour automatic composite

WASTEWATER CHARACTERISTICS AND FLOWS BY SUBDIVISION

The secondary tantalum subcategory has been divided into five subdivisions. The wastewater characteristics and discharge rates

corresponding to each subdivision are described separately in this section.

TANTALUM ALLOY LEACH AND RINSE

Spent acid is generated when batches of scrap tantalum alloy from forming operations are acid leached to recover tantalum. After leaching, the residual tantalum metal is rinsed with water to remove excess acid. The rinse water is discharged to treatment along with the spent acid. Table V-1 (page 4563) shows the production normalized water use and discharge rates for the tantalum alloy leach and rinse waste stream in liters per metric ton of tantalum powder produced.

Although the two component waste streams in this subdivision were not directly sampled, it is expected that their respective waste characteristics will be similar to two waste streams from this subcategory that were sampled. Spent acid from tantalum alloy leaching is expected to have similar characteristics to capacitor leaching wastewater which was sampled. Consequently, treatable concentrations of toxic metals including copper, nickel, and zinc are expected, as well as low pH. Wastewater characteristics for capacitor leaching wastewater are shown in Table V-6 (page 4565).

The water rinse component of the tantalum alloy leach and rinse waste stream is expected to have similar pollutant concentrations to the tantalum powder acid wash and rinse waste stream. Table V-7 (page 4569) shows the analytical data for this waste stream. The water rinse portion of the waste stream is expected to be acidic and contain treatable concentrations of toxic metals including copper and nickel.

CAPACITOR LEACH AND RINSE

This waste stream is composed of spent acid generated by leaching scrap capacitors and other electrical components that contain tantalum. The acid leaches away all impurities leaving behind a residue of tantalum metal powder. The spent acid is discharged to treatment along with rinse water used to remove excess acid. Table V-2 shows production normalized flows in liters per metric ton of tantalum metal produced.

Table V-6 summarizes the field sampling data for this waste stream. From this data, it can be seen that capacitor leaching spent acid can be characterized by an acidic pH, treatable concentrations of toxic metals including copper, lead, and zinc, and treatable concentrations of suspended solids.

TANTALUM SLUDGE LEACH AND RINSE

This wastewater stream arises from the upgrading of tantalum-bearing sludge. The sludge is leached with acid, rinsed with water and the residual solids separated from the liquid phase by filtration. Successive leaching operations are performed until the desired level of purity is attained. The production

normalized flow is shown in Table V-3, (page 4563) in liters per metric ton of equivalent pure tantalum powder produced.

At proposal, specific wastewater characteristics data for this stream were not available. Following proposal, sampling data for this subdivision were acquired through a self-sampling effort initiated at the specific request of the Agency. These data are presented in Table V-11 (page 4585) and show show treatable concentrations of toxic and nonconventional metals.

TANTALUM POWDER ACID WASH AND RINSE

Acid washing is used to polish the powdered tantalum by removing surface oxides that may have formed in the previous stages of the production process. The subsequent water rinse is used to wash the acid from the powder prior to drying. Table V-4 (page 4564) shows the production normalized flows for this operation in liters per metric ton of tantalum powder produced.

A sample of this wastewater was taken after residual tantalum was recovered by ammonium hydroxide precipitation. This step is assumed not to affect constituents in the waste stream other than tantalum and ammonia. Because of the raw materials and production operations used by this plant, there is no reason to expect that treatable concentrations of ammonia are generated in the acid wash and water rinse process. Therefore, the concentrations of ammonia presented in Table V-7 (page 4569) are assumed to be caused by addition of ammonium hydroxide in the tantalum recovery opera-tion, and can be disregarded when characterizing the acid wash and water rinse waste stream. The pH may also be modified by the addition of ammonium hydroxide, but the data in Table V-7 show that the pH of the waste stream after tantalum recovery is still acidic. Accounting for these differences, the acid wash and water rinse waste stream is characterized by treatable concentrations of copper and nickel, and having an acidic pH.

LEACHING WET AIR POLLUTION CONTROL

One plant reported using a wet scrubber to control hydrochloric acid fumes generated in acid leaching operations. The scrubber liquor blowdown is discharged to treatment. Table V-5 (page 4564) shows the production normalized flows for the scrubbing operation in liters per metric ton of equivalent pure tantalum powder produced.

Following proposal, sampling data for this subdivision were acquired through a self-sampling effort at the specific request of the Agency. These data presented in table V-11 (page 4585) show treatable concentrations of toxic and nonconventional metals, thus corroborating the data used at proposal.

TABLE V-1

WATER USE AND DISCHARGE RATES FOR
TANTALUM ALLOY LEACH AND RINSE

(1000 l/kkg of tantalum powder produced)

Plant Code	Percent Recycle	Production Normalized Water Use	Production Normalized Discharge Flow
1145	0	230.6	230.6

TABLE V-2

WATER USE AND DISCHARGE RATES FOR
CAPACITOR LEACH AND RINSE

(1000 l/kkg of tantalum powder produced)

Plant Code	Percent Recycle	Production Normalized Water Use	Production Normalized Discharge Flow
1089	0	20.2	20.2

TABLE V-3

WATER USE AND DISCHARGE RATES FOR
TANTALUM SLUDGE LEACH AND RINSE

(1000 l/kkg of equivalent pure tantalum powder produced)

Plant Code	Percent Recycle	Production Normalized Water Use	Production Normalized Discharge Flow
1146			205.3

TABLE V-4

WATER USE AND DISCHARGE RATES FOR
TANTALUM POWDER ACID WASH AND RINSE

(1000 l/kkg of tantalum powder produced)

Plant Code	Percent Recycle	Production Normalized Water Use	Production Normalized Discharge Flow
1089	0	0.350	0.350

TABLE V-5

WATER USE AND DISCHARGE RATES FOR
LEACHING WET AIR POLLUTION CONTROL

(1000 l/kkg of equivalent pure tantalum powder produced)

Plant Code	Percent Recycle	Production Normalized Water Use	Production Normalized Discharge Flow
1146			58.8

Table V-6

SECONDARY TANTALUM SAMPLING DATA
WASTE ACID FROM TANTALUM LEACHING
RAW WASTEWATER

Pollutant	Stream Code	Sample Type†	Concentrations (mg/l) Source	Day 1	Day 2	Day 3
Toxic Pollutants						
114. antimony	464	1	<0.01		1.0	47
115. arsenic	464	1	<0.01		<0.1	0.02
117. beryllium	464	1	<0.005		<0.5	<0.5
118. cadmium	464	1	<0.02		<2	<2
119. chromium (total)	464	1	<0.02		<2	<2
120. copper	464	1	<0.05	49,200	17,100	
122. lead	464	1	<0.05	15,900	6,100	
123. mercury	464	1	<0.0002		0.0037	0.001
124. nickel	464	1	0.5	3,580	1,890	
125. selenium	464	1	<0.01			<0.02
126. silver	464	1	<0.01		30.0	50
127. thallium	464	1	<0.01		0.075	0.02
128. zinc	464	1	0.08	8,060	2,810	

Table V-6 (Continued)

SECONDARY TANTALUM SAMPLING DATA
WASTE ACID FROM TANTALUM LEACHING
RAW WASTEWATER

Pollutant	Stream Code	Sample Type†	Concentrations (mg/l) Source	Day 1	Day 2	Day 3
Nonconventional Pollutants						
acidity	464	1	<1		390	19
alkalinity	464	1	40		21	21
aluminum	464	1	0.2		<10	<10
ammonia nitrogen	464	1	2.0		0.02	0.14
barium	464	1	<0.05		<5	<5
boron	464	1	<0.1		<10	<10
calcium	464	1	25.7		20	30
chemical oxygen demand (COD)	464	1	110		2,000	760
chloride	464	1	11		<1	<1
cobalt	464	1	<0.05		<5	<5
fluoride	464	1	0.64		0.06	0.28
iron	464	1	<0.5		60	5,550
magnesium	464	1	4.5		<10	<10

Table V-6 (Continued)

SECONDARY TANTALUM SAMPLING DATA
WASTE ACID FROM TANTALUM LEACHING
RAW WASTEWATER

Pollutant	Stream Code	Sample Type†	Concentrations (mg/l) Source	Day 1	Day 2	Day 3
Nonconventional Pollutants (Continued)						
manganese	464	1	<0.05		2,380	1,060
molybdenum	464	1	<0.05		<5	<5
phosphate	464	1	0.82		620,000	210,000
sodium	464	1	4.5		<10	<10
sulfate	464	1	590		700	290
tin	464	1	<0.05		65	8,960
titanium	464	1	<0.05		<5	<5
total organic carbon (TOC)	464	1	<1		12	27
total solids (TS)	464	1	250		210,000	7,800
vanadium	464	1	<0.05		<5	<5
yttrium	464	1	<0.05		<5	<5

Table V-6 (Continued)

SECONDARY TANTALUM SAMPLING DATA
WASTE ACID FROM TANTALUM LEACHING
RAW WASTEWATER

Pollutant	Stream Code	Sample Type†	Concentrations (mg/l) Source	Day 1	Day 2	Day 3
Conventional Pollutants						
oil and grease	464	1	<1		<1	10
total suspended solids (TSS)	464	1	19		80,000	1,200
pH (standard units)	464	1	7.60		2.26	3.00

†Sample Type Code: 1 - One-time grab

Table V-7

SECONDARY TANTALUM SAMPLING DATA
FILTRATE FROM NH_4OH PRECIPITATION OF TANTALUM
RAW WASTEWATER

Pollutant	Stream Code	Sample Type†	Concentrations (mg/l) Source	Day 1	Day 2	Day 3
Toxic Pollutants						
114. antimony	466	1	<0.01	<0.01		
115. arsenic	466	1	<0.01	0.02		
117. beryllium	466	1	<0.005	<0.005		
118. cadmium	466	1	<0.02	<0.02		
119. chromium (total)	466	1	<0.02	<0.02		
120. copper	466	1	<0.05	4.65		
122. lead	466	1	<0.05	<0.5		
123. mercury	466	1	<0.002	0.0004		
124. nickel	466	1	0.5	2.45		
125. selenium	466	1	<0.01	<0.01		
126. silver	466	1	<0.01	<0.01		
127. thallium	466	1	<0.01	0.02		
128. zinc	466	1	0.08	0.12		

Table V-7 (Continued)

SECONDARY TANTALUM SAMPLING DATA
FILTRATE FROM NH_4OH PRECIPITATION OF TANTALUM
RAW WASTEWATER

Pollutant	Stream Code	Sample Type†	Concentrations (mg/l) Source	Day 1	Day 2	Day 3
Nonconventional Pollutants						
acidity	466	1	<1	<1		
alkalinity	466	1	40	14		
aluminum	466	1	0.2	6.5		
ammonia nitrogen	466	1	2.0	1,600		
barium	466	1	<0.05	<0.05		
boron	466	1	<0.1	17.6		
calcium	466	1	25.7	0.7		
chemical oxygen demand (COD)	466	1	110	230		
chloride	466	1	11	410		
cobalt	466	1	<0.05	<0.5		
fluoride	466	1	0.64	530		
iron	466	1	<0.5	1.3		
magnesium	466	1	4.5	1.6		

Table V-7 (Continued)

SECONDARY TANTALUM SAMPLING DATA
FILTRATE FROM NH_4OH PRECIPITATION OF TANTALUM
RAW WASTEWATER

Pollutant	Stream Code	Sample Type†	Concentrations (mg/l) Source	Day 1	Day 2	Day 3
Nonconventional Pollutants (Continued)						
manganese	466	1	<0.05	<0.05		
molybdenum	466	1	<5	0.1		
phosphate	466	1	0.82	59		
sodium	466	1	4.5	14		
sulfate	466	1	590	1,600		
tin	466	1	<0.05	<0.5		
titanium	466	1	<0.05	<0.05		
total organic carbon (TOC)	466	1	<1	<1		
total solids (TS)	466	1	250	880		
vanadium	466	1	<0.05	<0.05		
yttrium	466	1	<0.05	<0.05		

Table V-7 (Continued)

SECONDARY TANTALUM SAMPLING DATA
FILTRATE FROM NH_4OH PRECIPITATION OF TANTALUM
RAW WASTEWATER

Pollutant	Stream Code	Sample Type†	Concentrations (mg/l) Source	Day 1	Day 2	Day 3
Conventional Pollutants						
oil and grease	466	1	<1	3		
total suspended solids (TSS)	466	1	19	528		
pH (standard units)	466	1	7.60	4.76		

†Sample Type Code: 1 - One-time grab

Table V-8

SECONDARY TANTALUM SAMPLING DATA
SUMP NUMBER 2 EFFLUENT
RAW WASTEWATER

Pollutant	Stream Code	Sample Type†	Concentrations (mg/l) Source	Day 1	Day 2	Day 3
Toxic Pollutants						
114. antimony	479	3	<0.01	<0.01	<0.1	<0.05
115. arsenic	479	3	<0.01	<0.01	<0.09	<0.1
117. beryllium	479	3	<0.005	<0.005	<0.05	<0.05
118. cadmium	479	3	<0.02	0.04	0.8	0.6
119. chromium (total)	479	3	<0.02	0.32	6.2	6.4
120. copper	479	3	<0.05	71.7	950	518
122. lead	479	3	<0.05	2.35	73.5	<10
123. mercury	479	3	<0.0002	<0.0002	<0.0002	0.0011
124. nickel	479	3	0.5	145	2,130	955
125. selenium	479	3	<0.01	<0.01	<0.1	<0.01
126. silver	479	3	<0.01	0.04	1	0.4
127. thallium	479	3	<0.01	<0.05		<0.5
128. zinc	479	3	0.08	15.4	89	25.4

Table V-8 (Continued)

SECONDARY TANTALUM SAMPLING DATA
SUMP NUMBER 2 EFFLUENT
RAW WASTEWATER

Pollutant	Stream Code	Sample Type†	Concentrations (mg/l) Source	Day 1	Day 2	Day 3
Nonconventional Pollutants						
acidity	479	3	<1	10	1,400	130
alkalinity	479	3	40	<1	<1	<1
aluminum	479	3	0.2	0.4	12	6
ammonia nitrogen	479	3	2.0	0.45	2.3	1.7
barium	479	3	<0.05	<0.05	<0.5	<0.5
boron	479	3	<0.1	<1	<10	<2
calcium	479	3	25.7	31.6	41	38
chemical oxygen demand (COD)	479	3	110	56	4,300	6,140
chloride	479	3	11	310	8,300	4,200
cobalt	479	3	<0.05	5.75	75.5	37
fluoride	479	3	0.64	0.21	0.72	0.52
iron	479	3	<0.5	150	3,440	1,300
magnesium	479	3	4.5	7.4	8	8

Table V-8 (Continued)

SECONDARY TANTALUM SAMPLING DATA
SUMP NUMBER 2 EFFLUENT
RAW WASTEWATER

Pollutant	Stream Code	Sample Type†	Concentrations (mg/l) Source	Day 1	Day 2	Day 3
Nonconventional Pollutants (Continued)						
manganese	479	3	<0.05	7.5	59.5	28
molybdenum	479	3	<0.05	<0.5	<5	<0.5
phosphate	479	3	0.82	860	16,000	6,600
sodium	479	3	4.5	9.3	33	610
sulfate	479	3	590	470	93	91
tin	479	3	<0.05	6.15	9	<0.5
titanium	479	3	<0.05	<0.05	<0.5	<0.5
total organic carbon (TOC)	479	3	<1	13	47	78
total solids (TS)	479	3	250	2,000	25,000	13,000
vanadium	479	3	<0.05	<0.05	0.5	<0.5
yttrium	479	3	<0.05	<0.05	<0.5	<0.5

Table V-8 (Continued)

SECONDARY TANTALUM SAMPLING DATA
SUMP NUMBER 2 EFFLUENT
RAW WASTEWATER

Pollutant	Stream Code	Sample Type†	Concentrations (mg/l) Source	Day 1	Day 2	Day 3
Conventional Pollutants						
oil and grease	479	1	<1	110	3	14
total suspended solids (TSS)	479	3	19	630	160	1,920
pH (standard units)	479	3	7.60	3.83	1.84	2.26

†Sample Type Code: 1 - One-time grab
3 - 8-hour manual composite

Table V-9

SECONDARY TANTALUM SAMPLING DATA
SUMP NUMBER 3 EFFLUENT
RAW WASTEWATER

Pollutant	Stream Code	Sample Type†	Concentrations (mg/l) Source	Day 1	Day 2	Day 3
Toxic Pollutants						
114. antimony	482	3	<0.01	<0.05	<0.01	<0.01
115. arsenic	482	3	<0.01	<0.1	<0.1	<0.1
117. beryllium	482	3	<0.005	<0.05	<0.005	<0.005
118. cadmium	482	3	<0.02	0.4	<0.02	<0.02
119. chromium (total)	482	3	<0.02	6.4	<0.02	<0.02
120. copper	482	3	<0.05	533	0.8	0.35
122. lead	482	3	<0.05	<10	<0.05	<0.05
123. mercury	482	3	<0.0002	<0.0002	<0.0002	<0.0002
124. nickel	482	3	0.5	972	<0.05	0.1
125. selenium	482	3	<0.01	<0.01	<0.01	<0.01
126. silver	482	3	<0.01	<0.01	<0.01	<0.01
127. thallium	482	3	<0.01	<0.01	<0.01	<0.01
128. zinc	482	3	0.08	26	0.06	0.06

Table V-9 (Continued)

SECONDARY TANTALUM SAMPLING DATA
SUMP NUMBER 3 EFFLUENT
RAW WASTEWATER

Pollutant	Stream Code	Sample Type†	Concentrations (mg/l) Source	Day 1	Day 2	Day 3
Nonconventional Pollutants						
acidity	482	3	<1	150	<1	<1
alkalinity	482	3	40	<1	213	61
aluminum	482	3	0.2	6	0.2	0.2
ammonia nitrogen	482	3	2.0	0.08	0.43	0.14
barium	482	3	<0.05	<0.5	<0.05	<0.05
boron	482	3	<0.1	<2	<0.1	<0.1
calcium	482	3	25.7	38	22	28.5
chemical oxygen demand (COD)	482	3	110	1,600	35	19.6
chloride	482	3	11	25	46	20
cobalt	482	3	<0.05	37.5	<0.05	<0.05
fluoride	482	3	0.64	0.39	0.85	0.21
iron	482	3	<0.5	1,340	0.4	0.15
magnesium	482	3	4.5	8	5.3	7.9

Table V-9 (Continued)

SECONDARY TANTALUM SAMPLING DATA
SUMP NUMBER 3 EFFLUENT
RAW WASTEWATER

Pollutant	Stream Code	Sample Type†	Concentrations (mg/l) Source	Day 1	Day 2	Day 3
Nonconventional Pollutants (Continued)						
manganese	482	3	<0.05	28.5	<0.05	<0.05
molybdenum	482	3	<0.05	<0.5	<0.05	<0.05
phosphate	482	3	0.82	<0.732	<0.732	1.3
sodium	482	3	4.5	620	247	7.4
sulfate	482	3	590	520	1,300	590
tin	482	3	<0.05	1.5	<0.1	<0.05
titanium	482	3	<0.05	<0.5	<0.05	<0.05
total organic carbon (TOC)	482	3	<1	<1	38	14
total solids (TS)	482	3	250	280	920	1,500
vanadium	482	3	<0.05	<0.5	<0.05	<0.05
yttrium	482	3	<0.05	<0.5	<0.05	<0.05

Table V-9 (Continued)

SECONDARY TANTALUM SAMPLING DATA
SUMP NUMBER 3 EFFLUENT
RAW WASTEWATER

Pollutant	Stream Code	Sample Type†	Concentrations (mg/l) Source	Day 1	Day 2	Day 3
Conventional Pollutants						
oil and grease	482	1	<1	<1	<1	<1
total suspended solids (TSS)	482	3	19	29	52	<1
pH (standard units)	482	3	7.60	3.28	10.5	8.05

†Sample Type Code: 1 - One-time grab
3 - 8-hour manual composite

Table V-10

SECONDARY TANTALUM SAMPLING DATA
TREATED EFFLUENT

Pollutant	Stream Code	Sample Type†	Concentrations (mg/l) Source	Day 1	Day 2	Day 3
Toxic Pollutants						
114. antimony	473	6	<0.01	0.13	<0.01	<0.01
115. arsenic	473	6	<0.01	<0.01	<0.01	<0.01
117. beryllium	473	6	<0.005	<0.005	<0.005	<0.005
118. cadmium	473	6	<0.02	<0.02	<0.02	<0.02
119. chromium (total)	473	6	<0.02	<0.02	<0.02	<0.02
120. copper	473	6	<0.05	0.35	0.7	<0.05
122. lead	473	6	<0.05	<0.5	<0.3	<0.5
123. mercury	473	6	<0.0002	<0.0002	<0.0002	<0.0002
124. nickel	473	6	0.5	5.35	4.6	1.85
125. selenium	473	6	<0.01	<0.01	<0.01	<0.01
126. silver	473	6	<0.01	<0.02	0.02	<0.01
127. thallium	473	6	<0.01	<0.02	<0.02	<0.02
128. zinc	473	6	0.08	1.46	0.74	0.16

Table V-10 (Continued)

SECONDARY TANTALUM SAMPLING DATA
TREATED EFFLUENT

Pollutant	Stream Code	Sample Type†	Concentrations (mg/l) Source	Day 1	Day 2	Day 3
Nonconventional Pollutants						
acidity	473	6	<1	<1	<1	<1
alkalinity	473	6	40	13	16	19
aluminum	473	6	0.2	<0.1	<0.1	<0.1
ammonia nitrogen	473	6	2.0	1.2	1.3	1.4
barium	473	6	<0.05	<0.05	<0.05	<0.05
boron	473	6	<0.1	0.2	0.1	0.2
calcium	473	6	25.7	745	762	808
chemical oxygen demand (COD)	473	6	110	160	120	130
chloride	473	6	11	1,100	240	1,200
cobalt	473	6	<0.05	4.25	2.9	1.3
fluoride	473	6	0.64	5.8	4.9	0.67
iron	473	6	<0.5	0.15	1.35	<0.15
magnesium	473	6	4.5	2	1.9	1.8

Table V-10 (Continued)

SECONDARY TANTALUM SAMPLING DATA
TREATED EFFLUENT

Pollutant	Stream Code	Sample Type†	Concentrations (mg/l) Source	Day 1	Day 2	Day 3
Nonconventional Pollutants (Continued)						
manganese	473	6	<0.05	2.5	2.35	1.45
molybdenum	473	6	<0.05	<0.05	<0.05	<0.05
phosphate	473	6	0.82	15	8.4	39
sodium	473	6	4.5	14.7	15.7	21.2
sulfate	473	6	590	670	1,200	7,600
tin	473	6	<0.05	<0.05	<0.1	<0.1
titanium	473	6	<0.05	<0.05	<0.05	<0.05
total organic carbon (TOC)	473	6	<1	15	8.4	39
total solids (TS)	473	6	250	4,000	3,500	3,400
vanadium	473	6	<0.05	<0.05	<0.05	<0.05
yttrium	473	6	<0.05	<0.05	<0.05	<0.05

Table V-10 (Continued)

SECONDARY TANTALUM SAMPLING DATA
TREATED EFFLUENT

Pollutant	Stream Code	Sample Type†	Concentrations (mg/l) Source	Day 1	Day 2	Day 3
Conventional Pollutants						
oil and grease	473	1	<1		<1	14
total suspended solids (TSS)	473	6	19	16	5	<1
pH (standard units)	473	6	7.60	5.70	5.58	6.47

†Sample Type Code: 1 - One-time grab
6 - 24-hour automatic composite

TABLE V-11

SECONDARY TANTALUM SAMPLING DATA
RAW WASTEWATER DATA FROM SELF-SAMPLING PROGRAM

POLLUTANT	CONCENTRATION	
Sample No.	88143	88144
Toxic Pollutants		
114. antimony	0.059	<0.100
117. beryllium	<0.050	<0.050
118. cadmium	0.120	0.600
119. chromium	0.528	1.010
120. copper	<0.100	<0.100
122. lead	<0.200	<0.200
124. nickel	<0.200	<0.200
126. silver	1.600	<0.100
128. zinc	<0.050	<0.050
Nonconventional Pollutants		
aluminum	<0.500	0.500
cobalt	<0.500	<0.500
iron	0.420	1.200
manganese	<0.050	<0.050
molybdenum	7.920	<5.000
tantalum	12.000	-.---
tin	5.000	<50.000
titanium	<0.200	<20.000
vanadium	<1.000	10.300

NOTES:

Sample No. 88143 = Tantalum Sludge Leach and Rinse
Sample No. 88144 = Leaching Wet Air Pollution Control

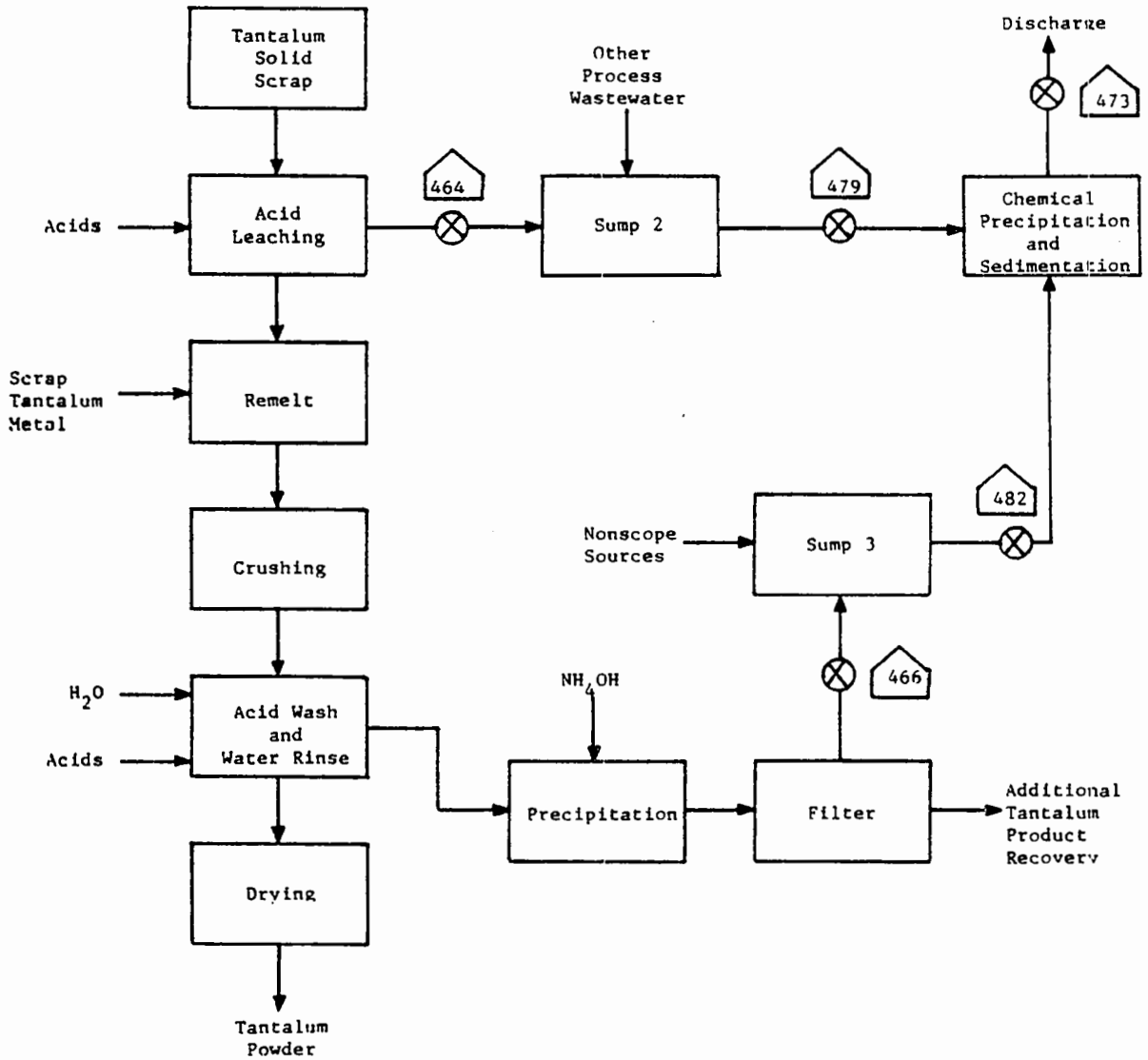

Figure V-1
SAMPLING SITES AT SECONDARY TANTALUM PLANT A

SECTION VI

SELECTION OF POLLUTANT PARAMETERS

This section examines the chemical analysis data presented in Section V and discusses the selection or exclusion of pollutants for potential limitation. The discussion that follows presents and briefly discusses selection of conventional and nonconventional pollutants for effluent limitations. Also described is the analysis that was performed to select or exclude priority pollutants for further consideration for limitations and standards. Pollutants will be considered for limitation if they are present in concentrations treatable by the technologies considered in this analysis. The treatable concentrations used for the priority metals were the long-term performance values achievable by chemical precipitation. sedimentation, and filtration. The treatable concentrations used for the priority organics were the long-term performance values achievable by carbon adsorption.

CONVENTIONAL AND NONCONVENTIONAL POLLUTANT PARAMETERS SELECTED

This study examined samples from the secondary tantalum subcategory for two conventional pollutant parameters (total suspended solids and pH) and several nonconventional pollutant parameters.

The conventional and nonconventional pollutants or pollutant parameters selected for limitation in this subcategory are:

tantalum
total suspended solids (TSS)
pH

Based on an examination of the production processes employed in the secondary tantalum subcategory, it is expected that concentrations of tantalum could be present in the wastewater generated in this subcategory. For this reason, tantalum is selected for limitation in this subcategory.

TSS concentrations ranging from 29 to 80,000 mg/l were observed in the raw waste samples analyzed for this study. All the concentrations are well above the 2.6 mg/l treatable concentration. Most of the specific methods used to remove toxic metals do so by converting these metals to precipitates, and these toxic-metal-containing precipitates should not be discharged. Meeting a limitation on total suspended solids helps ensure that removal of these precipitated toxic metals has been effective. For these reasons, total suspended solids are selected for limitation in this subcategory.

The pH values observed during this study ranged from 1.8 to 10.5. Seven of the values were equal to or less than 4.8, and one other was outside the 7.5 to 10.0 range considered desirable for

discharge to receiving waters. Many deleterious effects are caused by extreme pH values or rapid changes in pH. Also, effective removal of toxic metals by precipitation requires careful control of pH. Since pH control within the desirable limits is readily attainable by available treatment, pH is selected for limitation in this subcategory.

TOXIC PRIORITY POLLUTANTS

The frequency of occurrence of the priority pollutants in the raw wastewater samples taken is presented in Table VI-1 (page 4591). Table VI-1 is based on the raw wastewater data from streams 464 and 466 (see Section V). These data provide the basis for the categorization of specific pollutants, as discussed below. Treatment plant and sump effluent samples were not considered in the frequency count. Note that sampling was not done for any priority organic pollutants.

TOXIC POLLUTANTS NEVER DETECTED

The toxic pollutants listed in Table VI-2 (page 4592) were never detected in any raw wastewater samples from this subcategory. Therefore, they are not selected for consideration in establishing limitations.

TOXIC POLLUTANTS NEVER FOUND ABOVE THEIR ANALYTICAL QUANTIFICATION CONCENTRATION

The toxic pollutants listed below were never found above their analytical quantification concentration in any raw wastewater samples from this subcategory; therefore, these pollutants are not selected for consideration in establishing limitations.

117. beryllium
118. cadmium
119. chromium
125. selenium
127. thallium

PRIORITY POLLUTANTS PRESENT BELOW CONCENTRATIONS ACHIEVABLE BY TREATMENT

The pollutants listed below are not selected for consideration in establishing limitations because they were not found in any raw wastewater samples from this subcategory above concentrations considered achievable by existing or available treatment technologies. These pollutants are discussed individually following the list.

115. arsenic
123. mercury

Arsenic was detected above its quantification concentration of 0.010 mg/l in two of the samples analyzed. The detected values were both 0.02 mg/l. The treatable concentration for arsenic is

0.34 mg/l, much higher than any of the analyzed samples indicate. Therefore, arsenic is not selected for limitation.

Mercury was detected above its quantification concentration of 0.0001 mg/l in all three samples analyzed. The analysis showed a range of 0.0004 mg/l to 0.0037 mg/l, well below the treatable concentration for mercury of 0.036 mg/l. For this reason, mercury is not selected for limitation.

TOXIC POLLUTANTS SELECTED FOR FURTHER CONSIDERATION IN ESTABLISHING LIMITATIONS AND STANDARDS

The priority pollutants listed below are selected for further consideration in establishing limitations and standards for this subcategory. The toxic pollutants selected for further consideration for limitation are each discussed following the list.

114. antimony
120. copper
122. lead
124. nickel
126. silver
128. zinc

Antimony was detected below the quantification concentration of 0.100 mg/l in one sample (<0.01 mg/l). The other two samples indicated treatable concentrations of antimony of 1.0 mg/l and 47 mg/l. The treatable concentration for antimony is 0.47 mg/l. Therefore, antimony is selected for further consideration for limitation.

Copper was discovered above treatable concentrations in three samples analyzed. The treatable concentration for copper is 0.39 mg/l. The concentrations detected were 4.65 mg/l, 17,100 mg/l, and 49,200 mg/l. Since these waste streams contain substantial concentrations of treatable copper, this metal is selected for further consideration for limitation.

Lead was detected above treatable concentrations in two samples analyzed. The treatable concentration for lead is 0.08 mg/l. The sample concentrations showed 6,100 mg/l and 15,900 mg/l of lead. Because of such large lead concentrations in the waste streams, lead is selected for further consideration for limitation.

Nickel was detected above treatability (0.22 mg/l) in all three of the samples analyzed. Detected concentrations were found to be 2.45 mg/l, 1,890 mg/l, and 3,580 mg/l. Therefore, nickel is selected for further consideration for limitation.

Silver was detected below the quantification concentration of 0.02 mg/l in one of the three samples that were analyzed. The sample registered <0.01 mg/l. The remaining two samples were both above the treatable concentration of 0.07 mg/l. Concentrations of 30.0 and 50 mg/l of silver were detected, and

thus silver is selected for further consideration for limitation.

Zinc was detected above the treatable concentration of 0.23 mg/l in two samples showing 2,810 mg/l and 8,060 mg/l of zinc. The remaining sample was below treatability indicating only 0.12 mg/l zinc. However, because of the significant quantities found in two samples, zinc is selected for further consideration for limitation.

Table VI-1

FREQUENCY OF OCCURRENCE OF PRIORITY POLLUTANTS
SECONDARY TANTALUM SUBCATEGORY
RAW WASTEWATER

Pollutant	Analytical Quantification Concentration (mg/l)(a)	Treatable Concentration (mg/l)(b)	Number of Streams Analyzed	Number of Samples Analyzed	ND	Detected Below Quantification Concentration	Detected Below Treatable Concentration	Detected Above Treatable Concentration
114. antimony	0.100	0.47	2	3		1	0	2
115. arsenic	0.010	0.34	2	3		1	2	0
117. beryllium	0.010	0.20	2	3		3	0	0
118. cadmium	0.002	0.049	2	3		3	0	0
119. chromium	0.005	0.07	2	3		3	0	0
120. copper	0.009	0.39	2	3		0	0	3
121. cyanide (c)	0.02	0.047	0					
122. lead	0.020	0.08	2	3		1	0	2
123. mercury	0.0001	0.036	2	3		0	3	0
124. nickel	0.005	0.22	2	3		0	0	3
125. selenium	0.01	0.20	2	2		2	0	0
126. silver	0.02	0.07	2	3		1	0	2
127. thallium	0.100	0.34	2	3		3	0	0
128. zinc	0.050	0.23	2	3		0	1	2

(a) Analytical quantification concentration was reported with the data (see Section V).

(b) Treatable concentrations are based on performance of chemical precipitation, sedimentation, and filtration.

(c) Analytical quantification concentration for EPA Method 335.2, Total Cyanide Methods for Chemical Analysis of Water and Wastes, EPA 600/4-79-020, March 1979.

TABLE VI-2

TOXIC POLLUTANTS NEVER DETECTED

1. acenaphthene*
2. acrolein*
3. acrylonitrile*
4 benzene*
5. benzidine*
6. carbon tetrachloride (tetrachloromethane)*
7. chlorobenzene*
8. 1,2,4-trichlorobenzene*
9. hexachlorobenzene*
10. 1,2-dichloroethane*
11. 1,1,1-trichloroethane*
12. hexachloroethane*
13. 1,1-dichloroethane*
14. 1,1,2-trichloroethane*
15. 1,1,2,2-tetrachloroethane*
16. chloroethane*
17. bis (chloromethyl) ether (DELETED)*
18. bis (2-chloroethyl) ether*
19. 2-chloroethyl vinyl ether (mixed)*
20. 2-chloronaphthalene*
21. 2,4,6-trichlorophenol*
22. parachlorometa cresol*
23. chloroform (trichloromethane)*
24. 2-chlorophenol*
25. 1,2-dichlorobenzene*
26. 1,3-dichlorobenzene*
27. 1,4-dichlorobenzene*
28. 3,3'-dichlorobenzidine*
29. 1,1-dichloroethylene*
30. 1,2-trans-dichloroerhylene*
31. 2,4-dichlorophenol*
32. 1,2-dichloropropane*
33. 1,2-dichloropropylene (1,3-dichloropropene)*
34. 2,4-dimethylphenol*
35. 2,4-dinitrotoluene*
36. 2,6-dinitrotoluene*
37. 1,2-diphenylhydrazine*
38. ethylbenzene*
39. fluoranthene*
40. 4-chlorophenyl phenyl ether*
41. 4-bromophenyl phenyl ether*
42. bis(2-chloroisopropyl) ether*
43. bis(2-choroethoxy) methane*
44. methylene chloride (dichloromethane)*
45. methyl chloride (chloromethane)*
46. methyl bromide (bromomethane)*
47. bromoform (tribromomethane)*
48. dichlorobromomethane*
49. trichlorofluoromethane (DELETED)*

TABLE VI-2 (Continued)

TOXIC POLLUTANTS NEVER DETECTED

50. dichlorodifluoromethane (DELETED)*
51. chlorodibromomethane*
52. hexachlorobutadiene*
53. hexachlorocyclopentadiene*
54. isophorone*
55. naphthalene*
56. nitrobenzene*
57. 2-nitrophenol*
58. 4-nitrophenol*
59. 2,4-dinitrophenol*
60. 4,6-dinitro-o-cresol*
61. N-nitrosodimethylamine*
62. N-nitrosodiphenylamine*
63. N-nitrosodi-n-propylamine*
64. pentachlorophenol*
65. phenol*
66. bis(2-ethylhexyl) phthalate*
67. butyl benzyl phthalate*
68. di-n-butyl phthalate*
69. di-n-octyl phthalate*
70. diethyl phthalate*
71. dimethyl phthalate*
72. benzo (a)anthracene (1,2-benzanthracene)*
73. benzo (a)pyrene (3,4-benzopyrene)*
74. 3,4-benzofluoranthene*
75. benzo(k)fluoranthane (11,12-benzofluoranthene)*
76. chrysene*
77. acenaphthylene*
78. anthracene*
79. benzo(ghi)perylene (1,11-benzoperylene)*
80. fluorene*
81. phenanthrene*
82. dibenzo (a,h)anthracene (1,2,5,6-dibenzanthracene)*
83. indeno (1,2,3-cd)pyrene (w,e,-o-phenylenepyrene)*
84. pyrene*
85. tetrachloroethylene*
86. toluene*
87. trichloroethylene*
88. vinyl chloride (chloroethylene)*
89. aldrin*
90. dieldrin*
91. chlordane (technical mixture and metabolites)*
92. 4,4'-DDT*
93. 4,4'-DDE(p,p'DDX)*
94. 4,4'-DDD(p,p TDE)*
95. Alpha-endosulfan*
96. Beta-endosulfan*
97. endosulfan sulfate*
99. endrin aldehyde*

TABLE VI-2 (Continued)

TOXIC POLLUTANTS NEVER DETECTED

100. heptachlor*
101. heptachlor epoxide*
102. Alpha-BHC*
103. Beta-BHC*
104. Gamma-BHC (lindane)*
105. Delta-BHC*
106. PCB-1242 (Arochlor 1242)*
107. PCB-1254 (Arochlor 1254)*
108. PCB-1221 (Arochlor 1221)*
109. PCB-1232 (Arochlor 1232)*
110. PCB-1248 (Arochlor 1248)*
111. PCB-1260 (Arochlor 1260)*
112. PCB-1016 (Arochlor 1016)*
113. toxaphene*
116. asbestos (Fibrous)
121. cyanide (Total)*
129. 2,3,7,8-tetra chlorodibenzo-p-dioxin (TCDD)

*We did not analyze for these pollutants in samples of raw wastewater from this subcategory. These pollutants are not believed to be present based on the Agency's best engineering judgement which includes consideration of raw materials and process operations.

SECTION VII

CONTROL AND TREATMENT TECHNOLOGIES

The preceding sections of this supplement discussed the sources, flows, and characteristics of the wastewaters from secondary tantalum plants. This section summarizes the description of these wastewaters and indicates the treatment technologies which are currently practiced in the secondary tantalum subcategory for each wastewater stream. Secondly, this section presents the control and treatment technology options which were examined by the Agency for possible application to the secondary tantalum subcategory.

CURRENT CONTROL AND TREATMENT PRACTICES

Control and treatment technologies are discussed in Section VII of Vol. I and the pollutant concentrations achievable with these treatment technologies are presented in table VII-21 (page 248) of that volume. The basic principles of these technologies and the applicability to wastewaters similar to those found in this subcategory are presented there. This section presents a summary of the control and treatment technologies that are currently being applied to each of the sources generating wastewater in this subcategory. As discussed in Section V, wastewater associated with the secondary tantalum subcategory is characterized by the presence of the toxic metal pollutants and suspended solids. This analysis is supported by the raw (untreated) wastewater data presented for specific sources as well as combined waste streams in Section V. Generally, these pollutants are present in each of the wastewater streams at concentrations above the levels achievable by treatment, and these wastewaters are commonly combined for treatment. Construction of one wastewater treatment system for combined treatment allows plants to take advantage of economies of scale and in some instances to combine streams of different alkalinity to reduce treatment chemical requirements. All three plants in this subcategory currently have combined wastewater treatment systems including chemical precipitation and sedimentation. The options selected for consideration for BPT, BAT, NSPS, and pretreatment based on combined treatment of compatible wastewaters are summarized toward the end of this section.

TANTALUM ALLOY LEACH AND RINSE

Tantalum recovery from alloy scrap is accomplished by immersing the scrap into an acid bath and leaching away all impurities. Water rinsing of the tantalum powder residue follows the leaching operation and is designed to remove residual acid from the tantalum powder before drying. The spent acid, along with the once-through rinse water is discharged to lime and settle treatment. Polymer addition is used to aid flocculation and settling. The final effluent is discharged directly.

CAPACITOR LEACH AND RINSE

Tantalum is recovered from scrap capacitors and other electrical components by successive batch leaching. The spent acid contains high concentrations of dissolved metals and also some suspended solids. The wastewater from this operation and other wastewater streams is treated using chemical precipitation and sedimentation. The treated effluent is discharged to a surface water.

TANTALUM SLUDGE LEACH AND RINSE

Tantalum recovery from sludge requires successive leaching filtering and washing operations. The filtrate and wash water may be sent to a metal by-product recovery process prior to being discharged to the wastewater treatment facility. After treatment consisting of chemical precipitation and sedimentation, the effluent is discharged.

TANTALUM POWDER ACID WASH AND RINSE

One plant washes tantalum powder with acid and subsequently rinses it with water prior to the final drying of the product. The acid wash is designed to remove surface oxides from the tantalum powder, and the water rinse removes residual acid before drying. The acid and water stream are combined and pretreated with ammonium hydroxide to precipitate dissolved tantalum. After filtering the precipitate, the filtrate is routed to the treatment system for treatment consisting of chemical precipitation and sedimentation. It is then discharged to a surface water.

LEACHING WET AIR POLLUTION CONTROL

A wet scrubber may be used to control emissions of acid fumes generated by acid leaching operations. A caustic solution is circulated in the scrubber, and a 92 percent recycle rate is presently practiced. The scrubber discharge is combined with other wastewater streams and treated by chemical precipitation and sedimentation. The final effluent is discharged to a surface stream.

CONTROL AND TREATMENT OPTIONS

The Agency examined two control and treatment technology options that are applicable to the secondary tantalum subcategory. The options selected for evaluation represent applicable end-of-pipe treatment technologies.

Examination of the waste streams in this subcategory shows that no in-process flow reduction, beyond that presently being practiced, is achievable. Therefore, options including flow reduction were not considered.

OPTION A

Option A for the secondary tantalum subcategory requires control and treatment technologies to reduce the discharge of wastewater pollutant mass.

The Option A treatment scheme consists of chemical precipitation and sedimentation technology. Specifically, lime or some other alkaline compound is used to precipitate metal ions as metal hydroxides. The metal hydroxides and suspended solids settle out and the sludge is collected. Vacuum filtration is used to dewater sludge.

OPTION C

Option C for the secondary tantalum subcategory consists of all control and treatment requirements of Option A (chemical precipitation and sedimentation) plus multimedia filtration technology added at the end of the Option A treatment scheme. Multimedia filtration is used to remove suspended solids, including precipitates of metals, beyond the concentration attainable by gravity sedimentation. The filter suggested is of the gravity, mixed-media type, although other forms of filters, such as rapid sand filters or pressure filters would perform satisfactorily. The addition of filters also provides consistent removal during periods of time in which there are rapid increases in flows or loadings of pollutants to the treatment system.

THIS PAGE INTENTIONALLY LEFT BLANK

SECTION VIII

COSTS, ENERGY, AND NONWATER QUALITY ASPECTS

This section presents a summary of compliance costs for the secondary tantalum subcategory and a description of the treatment options and subcategory-specific assumptions used to develop these estimates. Together with the estimated pollutant removal performance presented in Section X of this supplement, these cost estimates provide a basis for evaluating each regulatory option. These cost estimates are also used in determining the probable economic impact of regulation on the subcategory at different pollutant discharge levels. In addition, this section addresses nonwater quality environmental impacts of wastewater treatment and control alternatives, including air pollution, solid wastes, and energy requirements, which are specific to the secondary tantalum subcategory.

TREATMENT OPTIONS FOR EXISTING SOURCES

As discussed in Section VII, two treatment options have been developed and considered in promulgating limitations and standards for the secondary tantalum subcategory. These options are summarized below and schematically presented in Figures X-1 and X-2 (pages 4624 and 4625).

OPTION A

The Option A treatment scheme consists of chemical precipitation and sedimentation technology.

OPTION C

Option C for the secondary tantalum subcategory consists of all control and treatment requirements of Option A (chemical precipitation and sedimentation) plus multimedia filtration technology added at the end of the Option A treatment scheme.

COST METHODOLOGY

A detailed discussion of the methodology used to develop the compliance costs is presented in Section VIII of the General Development Document. Plant-by-plant compliance costs have been estimated for the nonferrous metals manufacturing category and are presented in the administrative record supporting this regulation. Compliance cost estimates developed for the promulgated regulation are presented in Table VIII-1 (page 4602) for the direct dischargers in this subcategory. These cost estimates are equivalent to those developed for the proposed regulation.

Each of the general assumptions used to develop compliance costs has been previously discussed. No subcategory-specific

assumptions were used in developing compliance costs for the secondary tantalum subcategory.

ENERGY REQUIREMENTS

Energy requirements for Option A are estimated at 37,000 kwh/yr, and for Option C the estimated requirement is 39,000 kwh/yr. Option C energy requirements increase over those for Option A because filtration is being added as an end-of-pipe treatment technology. Since recycle of scrubber liquor is already in place in this subcategory, energy requirement savings resulting from flow reduction measures are not reflected in this analysis. Both options represent about two percent of a typical plant's energy usage. It is therefore concluded that the energy requirements of the treatment options considered will not have a significant impact on total plant energy consumption.

SOLID WASTE

Sludge generated in the secondary tantalum subcategory is due to the precipitation of metal hydroxides and carbonates using lime or other chemicals. Sludges associated with the secondary tantalum subcategory will necessarily contain quantities of toxic metal pollutants. Wastes generated by secondary metal industries can be regulated as hazardous. However, the Agency examined the solid waste that would be generated at secondary nonferrous metals manufacturing plants by the suggested treatment technologies and believes they are not hazardous wastes under the Agency's regulations implementing Section 3001 of the Resource Conservation and Recovery Act. The one exception to this is solid wastes generated by cyanide precipitation. These sludges are expected to be hazardous and this judgment was included in this study. None of the non-cyanide wastes are listed specifically as hazardous. Nor are they likely to exhibit a characteristic of hazardous waste. This judgment is made based on the recommended technology of chemical precipitation and filtration. By the addition of a small excess of lime during treatment, similar sludges, specifically toxic metal bearing sludges, generated by other industries such as the iron and steel industry passed the Extraction Procedure (EP) toxicity test. See 40 CFR §261.24. Thus, the Agency believes that the wastewater sludges will similarly not be EP toxic if the recommended technology is applied.

Although it is the Agency's view that solid wastes generated as a result of these guidelines are not expected to be hazardous, generators of these wastes must test the waste to determine if the wastes meet any of the characteristics of hazardous waste (see 40 CFR 262.11).

If these wastes should be identified or are listed as hazardous, they will come within the scope of RCRA's "cradle to grave" hazardous waste management program, requiring regulation, from the point of generation to point of final disposition. EPA's generator standards would require generators of hazardous nonferrous metals manufacturing wastes to meet containerization, labeling, recordkeeping, and reporting requirements; if plants dispose of hazardous wastes off-site, they would have to prepare a manifest, which would track the movement of the wastes from the generator's premise to a permitted off-site treatment, storage, or disposal facility. See 40 CFR 262.20 45 FR 33142 (May 19, 1980), as amended at 45 FR 86973 (December 31, 1980). The transporter regulations require transporters of hazardous wastes to comply with the manifest system to assure that the wastes are delivered to a permitted facility. See 40 CFR 263.20 45 FR 33151 (May 19, 1980), as amended at 45 FR 86973 (December 31, 1980). Finally, RCRA regulations establish standards for hazardous waste treatment, storage, and disposal facilities allowed to receive such wastes. See 40 CFR Part 464 46 FR 2802 (January 12, 1981), 47 FR 32274 (July 26, 1982).

Even if these wastes are not identified as hazardous, they still must be disposed of in compliance with the Subtitle D open dumping standards, implementing 4004 of RCRA. See 44 FR 53438 (September 13, 1979). It is estimated that the secondary tantalum subcategory will generate 386 metric tons of sludge per year when implementing the promulgated BPT treatment technology. The Agency has calculated as part of the costs for wastewater treatment the cost of hauling and disposing of these wastes.

AIR POLLUTION

There is no reason to believe that any substantial air pollution problems will result from implementation of chemical precipitation, sedimentation, and multimedia filtration. These technologies transfer pollutants to solid waste and are not likely to transfer pollutants to air.

TABLE VIII-1

COST OF COMPLIANCE FOR THE SECONDARY TANTALUM SUBCATEGORY
DIRECT DISCHARGERS

(March, 1982 Dollars)

Option	Total Required Capital Cost	Total Annual Cost
A	6,462	58,854
C	13,474	63,466

SECTION IX

BEST PRACTICABLE CONTROL TECHNOLOGY CURRENTLY AVAILABLE

This section defines the effluent characteristics attainable through the application of best practicable control technology currently available (BPT). BPT reflects the existing performance by plants of various sizes, ages, and manufacturing processes within the secondary tantalum subcategory, as well as the established performance of the recommended BPT systems. Particular consideration is given to the treatment already in place at plants within the data base.

The factors considered in identifying BPT include the total cost of applying the technology in relation to the effluent reduction benefits from such application, the age of equipment and facilities involved, the manufacturing processes used, nonwater quality environmental impacts (including energy requirements), and other factors the Administrator considers appropriate. In general, the BPT level represents the average of the existing performances of plants of various ages, sizes, processes, or other common characteristics. Where existing performance is uniformly inadequate, BPT may be transferred from a different subcategory or category. Limitations based on transfer of technology are supported by a rationale concluding that the technology is, indeed, transfera-ble, and a reasonable prediction that it will be capable of achieving the prescribed effluent limits. BPT focuses on end-of-pipe treatment rather than process changes or internal controls, except where such practices are common industry practice.

TECHNICAL APPROACH TO BPT

The Agency studied this subcategory to identify the processes used, the wastewaters generated, and the treatment processes installed. Information was collected from industry using data collection portfolios, and specific plants were sampled and the wastewaters analyzed. In making technical assessments of data, reviewing manufacturing processes, and assessing wastewater treatment technology options, both indirect and direct dischargers have been considered as a single group. An examination of plants and processes did not indicate any process differences based on the type of discharge, whether it be direct or indirect.

As explained in Section IV the secondary tantalum subcategory has been subdivided into five potential wastewater sources. Since the water use, discharge rates, and pollutant characteristics of each of these wastewaters is potentially unique, effluent limitations are developed for each of the five subdivisions.

For each of the subdivisions, a specific approach was followed for the development of BPT mass limitations. The first

requirement to calculate these limitations is to account for production and flow variability from plant to plant. Therefore, a unit of production or production normalizing parameter (PNP) was determined for each waste stream which could then be related to the flow from the process to determine a production normalized flow. Selection of the PNP for each process element is discussed in Section IV. Each plant within the subcategory was then analyzed to determine which subdivisions were present, the specific flow rates generated for each subdivision, and the specific production normalized flows for each subdivision. This analysis is discussed in detail in Section V. Nonprocess wastewaters such as rainfall runoff and noncontact cooling water are not considered in the analysis.

Production normalized flows for each subdivision were then analyzed to determine the flow to be used as part of the basis for BPT mass limitations. The selected flow (sometimes referred to as the BPT regulatory flow or BPT discharge rate) reflects the water use controls which are common practices within the category. The BPT regulatory flow is based on the average of all applicable data. Plants with normalized flows above the average may have to implement some method of flow reduction to achieve the BPT limitations.

The second requirement to calculate mass limitations is the set of concentrations that are achievable by application of the BPT level of treatment technology. Section VII discusses the various control and treatment technologies which are currently in place for each wastewater source. In most cases, the current control and treatment technologies consist of chemical precipitation and sedimentation (lime and settle technology) and a combination of reuse and recycle to reduce flow.

Using these regulatory flows and the achievable concentrations, the next step is to calculate mass loadings for each wastewater source or subdivision. This calculation was made on a stream-by-stream basis, primarily because plants in this subcategory may perform one or more of the operations in various combinations. The mass loadings (milligrams of pollutant per kilogram of production - mg/kg) were calculated by multiplying the BPT regulatory flow (l/kkg) by the concentration achievable by the BPT level of treatment technology (mg/l) for each pollutant parameter to be limited under BPT. These mass loadings are published in the Federal Register and in 40 CFR Part 421 as the effluent limitations.

The mass loadings which are allowed under BPT for each plant will be the sum of the individual mass loadings for the various wastewater sources which are found at particular plants. Accordingly, all the wastewater generated within a plant may be combined for treatment in a single or common treatment system, but the effluent limitations for these combined wastewaters are based on the various wastewater sources which actually contribute to the combined flow. This method accounts for the variety of combinations of wastewater sources and production processes which

may be found at secondary tantalum plants.

The Agency usually establishes wastewater limitations in terms of mass rather than concentration. This approach prevents the use of dilution as a treatment method (except for controlling pH). The production normalized wastewater flow (l/kkg) is a link between the production operations and the effluent limitations. The pollutant discharge attributable to each operation can be calculated from the normalized flow and effluent concentration achievable by the treatment technology and summed to derive an appropriate limitation for each plant.

INDUSTRY COST AND POLLUTANT REMOVAL ESTIMATES

In balancing costs in relation to pollutant removal estimates, EPA considers the volume and nature of existing discharges, the volume and nature of discharges expected after application of BPT, the general environmental effects of the pollutants, and the cost and economic impacts of the required pollution control level. The Act does not require or permit consideration of water quality problems attributable to particular point sources or industries, or water quality improvements in particular water quality bodies. Accordingly, water quality considerations were not the basis for selecting the proposed or promulgated BPT.

The methodology for calculating pollutant removal estimates and plant compliance costs is discussed in Section X. Table X-1 (page 4618) shows the pollutant removal estimates for each treatment option for direct dischargers. Compliance costs for direct dischargers are presented in Table X-2 (page 4619).

BPT OPTION SELECTION

The technology basis for the proposed and promulgated BPT limitations is Option A, chemical precipitation and sedimentation technology to remove metals and solids from combined wastewaters and to control pH. These technologies are demonstrated and economically achievable since they are already in place at all of the direct dischargers in this subcategory. The BPT treatment scheme is presented in Figure IX-1 (page 4612).

Implementation of the promulgated BPT limitations will remove annually an estimated 26,268 kilograms of toxic metals and 20,079 kilograms of TSS from raw wastewater generated by the secondary tantalum industry. Projected capital and annual costs are $6,462 and $58,854 (1982 dollars), respectively, to achieve the promulgated BPT limitations.

WASTEWATER DISCHARGE RATES

A BPT discharge rate is calculated for each subdivision based on the average of the flows of the existing plants as determined from analysis of data collection portfolios. The discharge rate is used with the achievable treatment concentrations to determine BPT effluent limitations. Since the discharge rate may be

different for each wastewater source, separate production normalized discharge rates for each of the five wastewater sources are discussed below and summarized in Table IX-1. The discharge rates are normalized on a production basis by relating the amount of wastewater generated to the mass of the intermediate product which is produced by the process associated with the waste scream in question. These production normalizing parameters, or PNPs. are also listed in Table IX-1.

Section V of this document further describes the discharge flow rates and presents the water use and discharge flow rates for each plant by subdivision in Tables V-1 through V-5 (pages 4564 - 4565).

TANTALUM ALLOY LEACH AND RINSE

The BPT wastewater discharge rate for tantalum alloy leach and rinse is 230,600 l/kkg (55,261 gal/ton) of tantalum powder produced based on the only water use rate reported. This rate is allocated only for those plants which leach tantalum alloy scrap material by immersion into an acid bath and use water to rinse the tantalum powder product before it is dried. Water use and wastewater discharge rates are presented in Table V-1 (page 4564).

CAPACITOR LEACH AND RINSE

The BPT wastewater discharge rate for capacitor leach and rinse is 20200 l/kkg (4841 gal/ton) of tantalum powder produced. This rate is allocated only for those plants whose raw material is scrap electrical components containing tantalum. Recovery of tantalum powder is performed by successive leachings of the raw material. The production normalized flows for this subdivision are presented in Table V-2 (page 4564).

TANTALUM SLUDGE LEACH AND RINSE

The proposed and promulgated BPT wastewater discharge rate for tantalum sludge leach and rinse is 205300 l/kkg (49198 gal/ton) of equivalent pure tantalum powder produced, based on the one water use rate reported. This rate is allocated only for those plants which use tantalum-bearing sludge as their raw material. The upgrading of tantalum-bearing sludge involves filtration for solids and spent acid separation and rinsing of the residual solids with water prior to the next leaching step. Water use and wastewater discharge rates are presented in Table V-3 (page 4564).

TANTALUM POWDER ACID WASH AND RINSE

The BPT wastewater discharge rate for tantalum powder acid wash and rinse is 350 l/kkg (84 gal/ton) of tantalum powder produced by the plant, based on the only reported water use rate. This rate is allocated only for those plants that incorporate a final acid wash of the tantalum powder to remove surface oxides,

followed by a water rinse which cleans the powder prior to drying. The one plant that reported using such a system uses a tantalum recovery operation consisting of pH adjustment by ammonia addition and recovery of the precipitated tantalum solids. After treatment for tantalum recovery, the wastewater is further treated and discharged. The production normalized water use and discharge rates are presented in Table V-4 (page 4565).

LEACHING WET AIR POLLUTION CONTROL

The BPT wastewater discharge rate for acid leach wet air pollution control is 4880 l/kkg (1169 gal/ ton) of equivalent pure tantalum powder produced. This rate is allocated for those plants which use a wet air pollution control system to control acid fumes which arise from the leaching operations. The available data indicate that this scrubber operates at 92 percent recycle. The BPT flow is based on this demonstrated recycle performance of the acid fume scrubber. Production normalized water use and discharge rates for this subdivision are presented in Table V-5 (page 4565).

REGULATED POLLUTANT PARAMETERS

The raw wastewater concentrations from individual operations and the subcategory as a whole were examined to select certain pollutant parameters for limitation. This examination and evaluation was presented in Section VI and also in Section X. A total of seven pollutants or pollutant parameters are selected for limitation under BPT and are listed below:

120. copper
122. lead
124. nickel
128. zinc
tantalum
TSS
pH

EFFLUENT LIMITATIONS

The pollutant concentrations achievable by application of the promulgated BPT (both one-day maximum and monthly average values) are multiplied by the BPT normalized discharge flows summarized in Table IX-1 (page 4608) to calculate the mass of pollutants allowed to be discharged per mass of product. The results of these calculations in milligrams of pollutant per kilogram of product represent the BPT effluent limitations and are presented in Table IX-2 (page 4609) for each individual waste stream.

Table IX-1

BPT WASTEWATER DISCHARGE RATES FOR THE SECONDARY TANTALUM SUBCATEGORY

Wastewater Stream	BPT Normalized Discharge Rate		Production Normalizing Parameter
	l/kkg	gal/ton	
Tantalum Alloy Leach and Rinse	230,600	55,261	Tantalum powder produced
Capacitor Leach and Rinse	20,200	4,841	Tantalum powder produced from leaching
Tantalum Sludge Leach and Rinse	205,300	49,198	Equivalent pure tantalum powder produced
Tantalum Powder Acid Wash and Rinse	350	84	Tantalum powder produced
Leaching Wet Air Pollution Control	4,880	1,169	Equivalent pure tantalum powder produced

TABLE IX-2

BPT MASS LIMITATIONS FOR THE SECONDARY TANTALUM SUBCATEGORY

(a) Tantalum Alloy Leach and Rinse BPT

Pollutant or pollutant property	Maximum for any one day	Maximum for monthly average
mg/kg (lb/million lbs) of tantalum powder produced		
Antimony	661.800	295.200
*Copper	438.100	230.600
*Lead	96.850	46.120
*Nickel	442.800	292.900
Silver	94.550	39.200
*Zinc	336.700	140.700
*Tantalum	103.800	---
*TSS	9,455.000	4,497.000
*pH Within the range of 7.5 to 10.0 at all times		

(b) Capacitor Leach and Rinse BPT

Pollutant or pollutant property	Maximum for any one day	Maximum for monthly average
mg/kg (lb/million lbs) of tantalum powder produced from leaching		
Antimony	57.970	25.860
*Copper	38.380	20.200
*Lead	8.484	4.040
*Nickel	38.780	25.650
Silver	8.282	3.434
*Zinc	29.490	12.320
*Tantalum	9.090	---
*TSS	828.200	393.900
*pH Within the range of 7.5 to 10.0 at all times		

*Regulated Pollutant

TABLE IX-2 (Continued)

BPT MASS LIMITATIONS FOR THE SECONDARY TANTALUM SUBCATEGORY

(c) Tantalum Sludge Leach and Rinse BPT

Pollutant or pollutant property	Maximum for any one day	Maximum for monthly average
mg/kg (lb/million lbs) of equivalent pure tantalum powder produced		
Antimony	589.200	262.800
*Copper	390.100	205.300
*Lead	86.230	41.060
*Nickel	394.200	260.700
Silver	84.170	34.900
*Zinc	299.700	125.200
*Tantalum	92.390	---
*TSS	8,417.000	4,003.000
*pH Within the range of 7.5 to 10.0 at all times		

(d) Tantalum Powder Acid Wash and Rinse BPT

Pollutant or pollutant property	Maximum for any one day	Maximum for monthly average
mg/kg (lb/million lbs) of tantalum powder produced		
Antimony	1.005	0.448
*Copper	0.665	0.350
*Lead	0.147	0.070
*Nickel	0.672	0.445
Silver	0.144	0.060
*Zinc	0.511	0.214
*Tantalum	0.158	---
*TSS	14.350	6.825
*pH Within the range of 7.5 to 10.0 at all times		

*Regulated Pollutant

TABLE IX-2 (Continued)

BPT MASS LIMITATIONS FOR THE
SECONDARY TANTALUM SUBCATEGORY

(e) Leaching Wet Air Pollution Control BPT

Pollutant or pollutant property	Maximum for any one day	Maximum for monthly average
mg/kg (lb/million lbs) of equivalent pure tantalum powder produced		
Antimony	14.010	6.246
*Copper	9.272	4.880
*Lead	2 050	0.976
*Nickel	9.370	6.198
Silver	2.001	0.830
*Zinc	7.125	2.977
*Tantalum	2.196	---
*TSS	200.100	95.160
*pH Within the range of 7.5 to 10.0 at all times		

*Regulated Pollutant

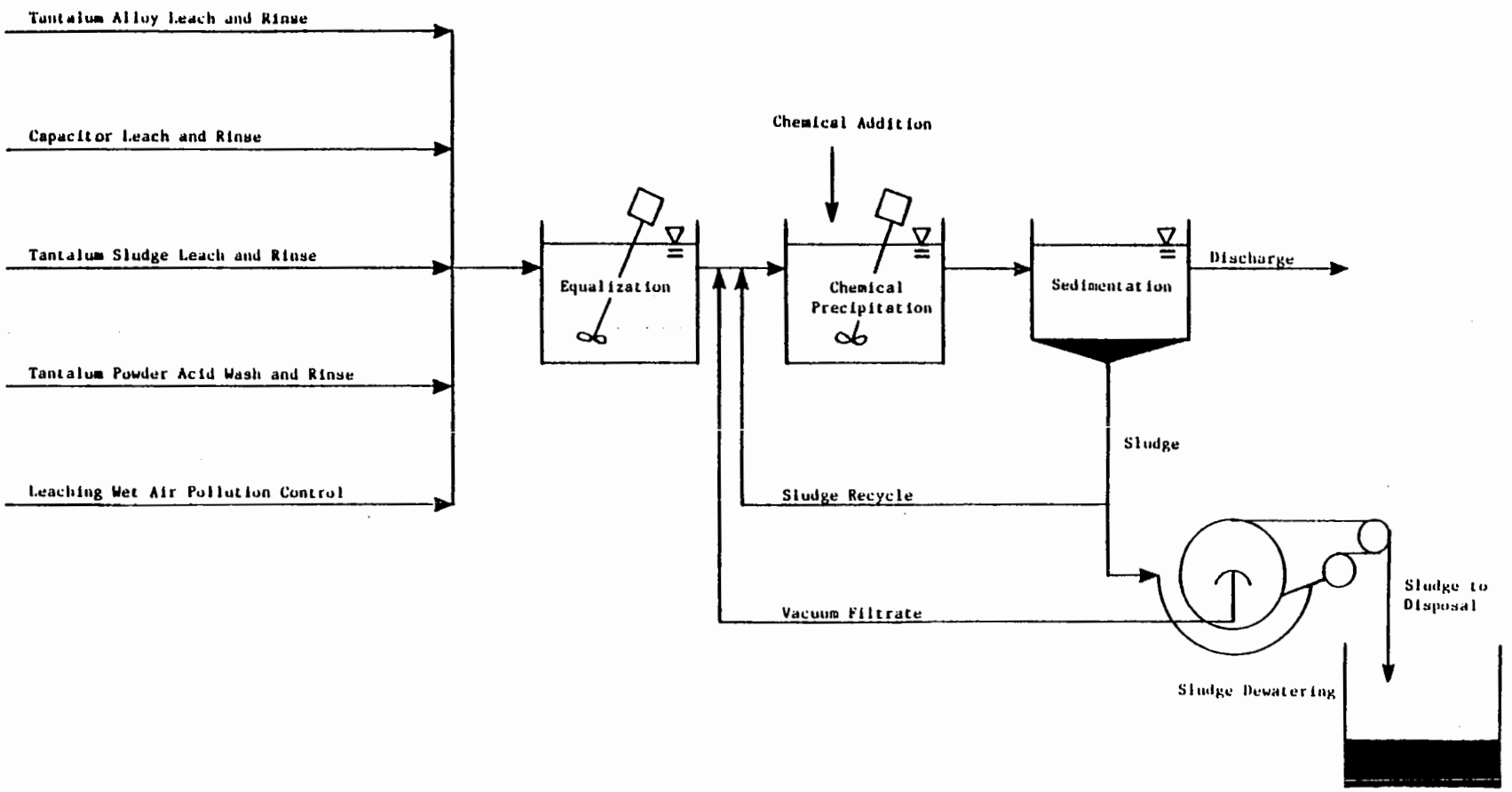

Figure IX-1

BPT TREATMENT SCHEME FOR THE SECONDARY TANTALUM SUBCATEGORY

SECTION X

BEST AVAILABLE TECHNOLOGY ECONOMICALLY ACHIEVABLE

These effluent limitations are based on the best control and treatment technology used by a specific point source within the industrial category or subcategory, or by another category from which it is transferable. Emphasis is placed on additional treatment techniques applied at the end of the treatment systems currently used, as well as reduction of the amount of water used and discharged, process control, and treatment technology optimization.

The factors considered in assessing best available technology economically achievable (BAT) include the age of equipment and facilities involved, the process used, process changes, nonwater quality environmental impacts (including energy requirements), and the costs of application of such technology BAT represents the best available technology economically achievable at plants of various ages, sizes, processes, or other characteristics. BAT may include feasible process changes or internal controls, even when not in common industry practice.

The required assessment of BAT considers costs, but does not require a balancing of costs against pollutant removals However, in assessing the proposed and promulgated BAT, the Agency has given substantial weight to the economic achievability of the technology.

TECHNICAL APPROACH TO BAT

The Agency reviewed a wide range of technology options and evaluated the available possibilities to ensure that the most effective and beneficial technologies were used as the basis of BAT. To accomplish this, the Agency elected to examine two technology options which could be applied to the secondary tantalum subcategory as alternatives for the basis of BAT effluent limitations.

For the development of BAT effluent limitations, mass loadings were calculated for each wastewater source or subdivision in the subcategory using the same technical approach as described in Section IX for BPT limitations development. The differences in the mass loadings for BPT and BAT are due to increased treatment.

POLLUTANT REMOVAL ESTIMATES

A complete description of the methodology used to calculate the estimated pollutant removal achieved by the application of the various treatment options is presented in Section X of Vol. I. In short, sampling data collected during the field sampling program were used to characterize the major wastewater streams considered for regulation. At each sampled facility, the sampling data were

production normalized for each unit operation (i.e.. mass of pollutant generated per mass of product manufactured). This value, referred to as the raw waste, was used to estimate the mass of toxic pollutants generated within the secondary tantalum subcategory. The pollutant removal estimates were calculated for each plant by first estimating the total mass of each pollutant in the untreated wastewater. This was calculated by first multiplying the raw waste values by the corresponding production value for that stream and then summing these values for each pollutant for every stream generated by the plant.

Next, the volume of wastewater discharged after the application of each treatment option was estimated for each operation at each plant by comparing the actual discharge to the regulatory flow. The smaller of the two values was selected and summed with the other plant flows. The mass of pollutant discharged was then estimated by multiplying the achievable concentration values attainable with the option (mg/l) by the estimated volume of process wastewater discharged by the subcategory. The mass of pollutant removed is the difference between the estimated mass of pollutant generated by each plant in the subcategory and the mass of pollutant discharged after application of the treatment option. The pollutant removal estimates for direct dischargers in the secondary tantalum subcategory are presented in Table X-1 (page 4618). These estimates are the same as those developed for the proposed regulation.

COMPLIANCE COSTS

In estimating subcategory-wide compliance costs, the first step was to develop a cost estimation model, relating the total costs associated with installation and operation of wastewater treatment technologies to plant process wastewater discharge. EPA applied the model to each plant. The plant's investment and operating costs are determined by what treatment it has in place and by its individual process wastewater discharge flow. As discussed above, this flow is either the actual or the BAT regulatory flow, whichever is lesser. The final step was to annualize the capital costs, and to sum the annualized capital costs, and the operating and maintenance costs for each plant, yielding the cost of compliance for the subcategory. The compliance costs associated with the various options are presented in Table X-2 (page 4619) for direct dischargers in the secondary tantalum subcategory. These costs were used in assessing economic achievability.

BAT OPTION SELECTION - PROPOSAL

EPA proposed BAT for the secondary tantalum subcategory based on Option C, chemical precipitation, sedimentation, and multimedia filtration technology.

The estimated capital cost of proposed BAT was $13,474 and the annual cost was $63,466 (1982 dollars). Implementation of the proposed BAT technology was estimated to remove 4.9 kilograms of

priority pollutants and 35.5 kilograms of suspended solids over the estimated BPT removal.

BAT OPTION SELECTION - PROMULGATION

EPA is promulgating BAT limitations for this subcategory based on Option C, which includes chemical precipitation, sedimentation, and multimedia filtration. The estimated capital cost of promulgated BAT is $13,474 (1982 dollars) and the annual cost is $63,466 (1982 dollars). The end-of-pipe treatment configuration for Option C is presented in Figure X-2 (page 4625).

EPA is promulgating BAT with multimedia filtration as part of the model technology because this technology results in additional removal of toxic metals. Filtration is also presently demonstrated at 25 plants throughout the nonferrous metals manufacturing category. Filtration adds reliability to the treatment system by making it less susceptible to operator error and to sudden changes in raw wastewater flow and concentrations.

Implementation of the control and treatment technologies of Option C would remove annually an estimated 26,273 kilograms of toxic metal pollutants and 20,115 kilograms of suspended solids, which is 4.9 kilograms of toxic metal pollutants and 35.5 kilograms of suspended solids over the estimated BPT removal.

WASTEWATER DISCHARGE RATES

A BAT discharge rate was calculated for each subdivision based upon the flows of the existing plants, as determined from analysis of the data collection portfolios. The discharge rate is used with the achievable treatment concentrations to determine BAT effluent limitations. Since the discharge rate may be different for each wastewater source, separate production normalized discharge rates for each of the five wastewater sources were determined and are summarized in Table X-3 (page 4620). The discharge rates are normalized on a production basis by relating the amount of wastewater generated to the mass of the intermediate product which is produced by the process associated with the waste stream in question. These production normalizing parameters, or PNPs, are also listed in Table X-3.

The BAT discharge rates reflect no flow reduction requirements as compared to the BPT option flows. In-process flow reduction beyond the BPT allowances is not achievable for any waste streams in this subcategory. As an example, the acid leach scrubber used at one of the secondary tantalum plants already operates at 92 percent recycle. Consequently, the BAT and BPT production normalized discharge flows are identical.

REGULATED POLLUTANT PARAMETERS

The raw wastewater concentrations from individual operations and the subcategory as a whole were examined to select certain pollutants and pollutant parameters for limitation. This

examination and evaluation was presented in Section VI. The Agency, however, has chosen not to regulate all six priority pollutants selected in this analysis. The high cost associated with analysis for toxic metal pollutants has prompted EPA to develop an alternative method for regulating and monitoring priority pollutant discharges from the nonferrous metals manufacturing category. Rather than developing specific effluent mass limitations and standards for each of the toxic metals found in treatable concentrations in the raw wastewater from a given subcategory, the Agency is promulgating effluent mass limitations only for those pollutants generated in the greatest quantities as shown by the pollutant removal estimate analysis. The pollutants selected for specific limitation are listed below:

120. copper
122. lead
124. nickel
128. zinc
tantalum

By establishing limitations and standards for certain metal pollutants, dischargers will attain the same degree of control over toxic metal pollutants as they would have been required to achieve had all the toxic metal pollutants been directly limited.

This approach is technically justified since the achievable concentrations used for chemical precipitation and sedimentation technology are based on optimized treatment for concomitant multiple metals removal. Thus, even though metals have somewhat different theoretical solubilities, they will be removed at very nearly the same rate in a chemical precipitation and sedimentation treatment system operated for multiple metals removal. Filtration as part of the technology basis is likewise justified because this technology removes metals non-preferentially.

The pollutants selected for specific limitation in the secondary tantalum subcategory are copper, lead, nickel, zinc, and tantalum. The following toxic metal pollutants are excluded from limitation on the basis that they are effectively controlled by the limitations developed for copper, lead, nickel, zinc, and tantalum:

114. antimony
126. silver

The priority metal pollutants copper, lead, nickel, and zinc, as well as the nonconventional metal pollutant tantalum, are specifically limited to ensure the control of the excluded priority metal pollutants These pollutants are indicators of the performance of the treatment technology.

EFFLUENT LIMITATIONS

The achievable concentrations, both one day maximum and monthly

average values, are multiplied by the BAT normalized discharge flows summarized in Table X-3 (page 4620) to calculate the mass of pollutants allowed to be discharged per mass of product. The results of these calculations in milligrams of pollutant per kilogram of product represent the BAT effluent limitations and are presented in Table X-4 (page 4621) for each wastewater stream.

Table X-1

POLLUTANT REMOVAL ESTIMATES FOR DIRECT DISCHARGERS

Pollutant	RAW WASTE (kg/yr)	OPTION A DISCHARGE (kg/yr)	OPTION A REMOVED (kg/yr)	OPTION C DISCHARGE (kg/yr)	OPTION C REMOVED (kg/yr)
Antimony	10.5129	2.6462	7.8667	1.7765	8.7364
Arsenic	1.5593	1.4213	0.1380	0.9541	0.6052
Cadmium	5.8458	0.2985	5.5473	0.1879	5.6579
Chromium (total)	9.0866	0.3172	8.7694	0.2613	8.8253
Copper	14524.7051	2.1924	14522.5126	1.4734	14523.2316
Cyanide (total)	0.2502	0.1664	0.0838	0.1400	0.1102
Lead	4594.6398	0.4538	4594.1860	0.3030	4594.3368
Mercury	0.0083	0.0048	0.0036	0.0048	0.0036
Nickel	4418.2463	2.7975	4415.4488	0.8358	4417.4105
Selenium	23.1056	0.3782	22.7275	0.2614	22.8442
Silver	0.5509	0.3657	0.1853	0.3700	0.1809
Thallium	0.7842	0.5179	0.2663	0.5209	0.2633
Zinc	2691.6323	1.2475	2690.3848	0.8674	2690.7649
Total Priority Pollutants	26280.9274	12.8072	26268.1202	7.9564	26272.9709
Ammonia	0.5249	0.3659	0.1590	0.3659	0.1590
Cobalt	1491.6734	0.1885	1491.4849	0.1255	1491.5479
Flouride	2.9343	0.3810	2.5534	0.3733	2.5610
Total Nonconv.	1495.1326	0.9354	1494.1972	0.8647	1494.2679
TSS	20124.3335	45.3640	20078.9695	9.8329	20114.5006
Oil and Grease	141.3866	93.7944	47.5923	93.7911	47.5955
Total Conv.	20265.7201	139.1584	20126.5617	103.6240	20162.0961
Total Pollutants	48041.7801	152.9010	47888.8791	112.4452	47929.3350

TABLE X-2

COST OF COMPLIANCE FOR THE SECONDARY TANTALUM SUBCATEGORY

Direct Dischargers

Option	Total Required Capital Cost (1982 dollars)	Total Annual Cost (1982 dollars)
A	6462	58854
C	13474	63466

Table X-3

BAT WASTEWATER DISCHARGE RATES FOR THE SECONDARY TANTALUM SUBCATEGORY

Wastewater Stream	BAT Normalized Discharge Rate		Production Normalizing Parameter
	l/kkg	gal/ton	
Tantalum Alloy Leach and Rinse	230,600	55,261	Tantalum powder produced
Capacitor Leach and Rinse	20,200	4,841	Tantalum powder produced from leaching
Tantalum Sludge Leach and Rinse	205,300	49,198	Equivalent pure tantalum powder produced
Tantalum Powder Acid Wash and Rinse	350	84	Tantalum powder produced
Leaching Wet Air Pollution Control	4,880	1,169	Equivalent pure tantalum powder produced

TABLE X-4

BAT MASS LIMITATIONS FOR THE SECONDARY TANTALUM SUBCATEGORY

(a) Tantalum Alloy Leach and Rinse BAT

Pollutant or pollutant property	Maximum for any one day	Maximum for monthly average
mg/kg (lb/million lbs) of tantalum powder produced		
Antimony	445.100	198.300
*Copper	295.200	140.700
*Lead	64.570	29.980
*Nickel	126.800	85.320
Silver	66.870	27.670
*Zinc	235.200	96.850
*Tantalum	103.800	---

(b) Capacitor Leach and Rinse BAT

Pollutant or pollutant property	Maximum for any one day	Maximum for monthly average
mg/kg (lb/million lbs) of tantalum powder produced from leaching		
Antimony	38.990	17.370
*Copper	25.860	12.320
*Lead	5.656	2.626
*Nickel	11.110	7.474
Silver	5.858	2.424
*Zinc	20.600	8.484
*Tantalum	9.090	---

*Regulated Pollutant

TABLE X-4 (Continued)

BAT MASS LIMITATIONS FOR THE SECONDARY TANTALUM SUBCATEGORY

(c) Tantalum Sludge Leach and Rinse BAT

Pollutant or pollutant property	Maximum for any one day	Maximum for monthly average
mg/kg (lb/million lbs) of equivalent pure tantalum powder produced		
Antimony	396.200	176.600
*Copper	262.800	125.200
*Lead	57.480	26.690
*Nickel	112.900	75.960
Silver	59.540	24.640
*Zinc	209.400	86.230
*Tantalum	92.390	---

(d) Tantalum Powder Acid Wash and Rinse BAT

Pollutant or pollutant property	Maximum for any one day	Maximum for monthly average
mg/kg (lb/million lbs) of tantalum powder produced		
Antimony	0.676	0.301
*Copper	0.448	0.214
*Lead	0.098	0.046
*Nickel	0.193	0.130
Silver	0.102	0.042
*Zinc	0.357	0.147
*Tantalum	0.158	---

*Regulated Pollutant

TABLE X-4 (Continued)

BAT MASS LIMITATIONS FOR THE SECONDARY TANTALUM SUBCATEGORY

(e) Leaching Wet Air Pollution Control BAT

Pollutant or pollutant property	Maximum for any one day	Maximum for monthly average
mg/kg (lb/million lbs) of equivalent pure tantalum powder produced		
Antimony	9.418	4.197
*Copper	6.246	2.977
*Lead	1.366	0.634
*Nickel	2.684	1.806
Silver	1.415	0.586
*Zinc	4.978	2.050
*Tantalum	2.196	---

*Regulated Pollutant

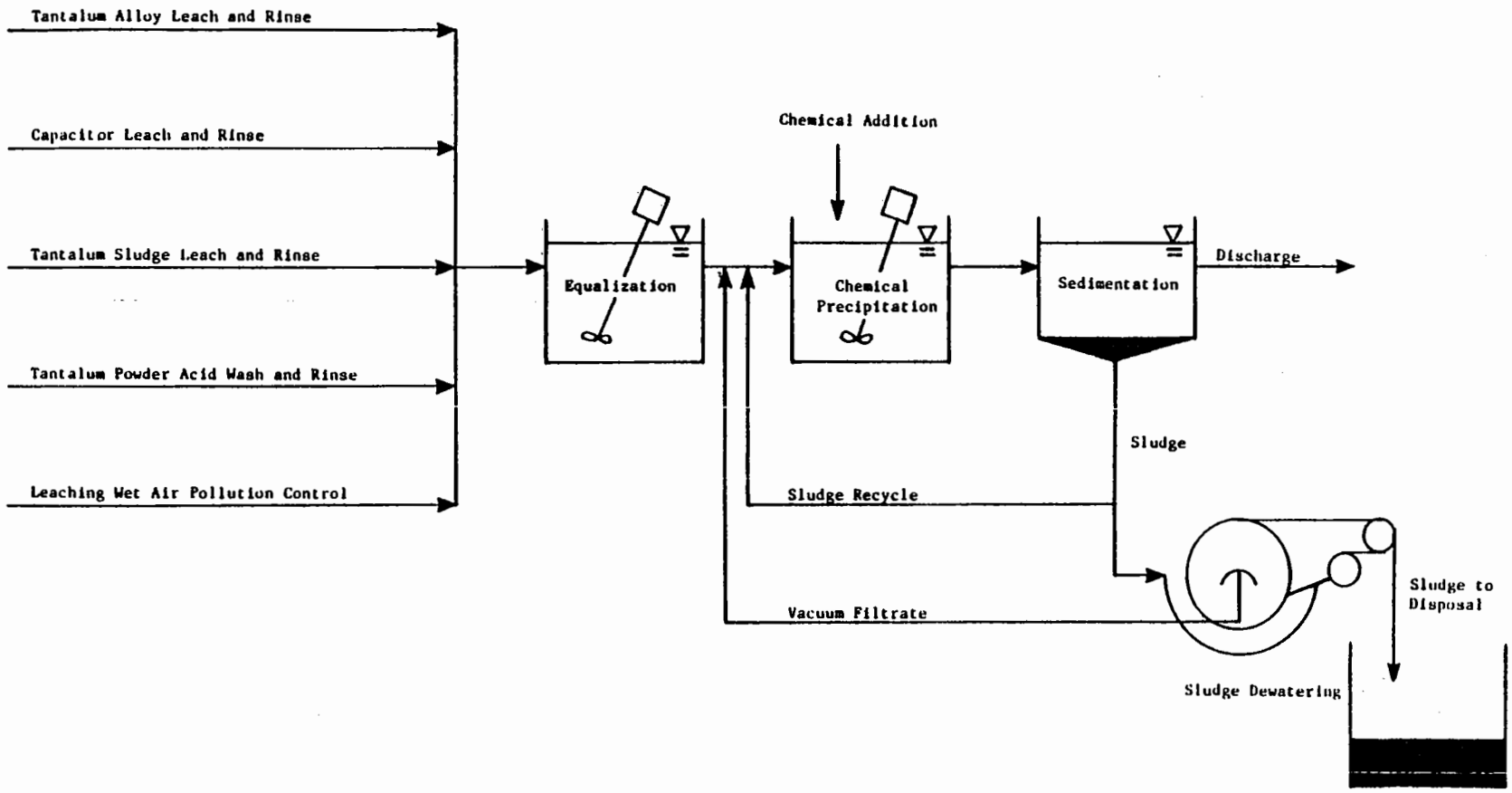

Figure X-1

BAT TREATMENT SCHEME FOR OPTION A

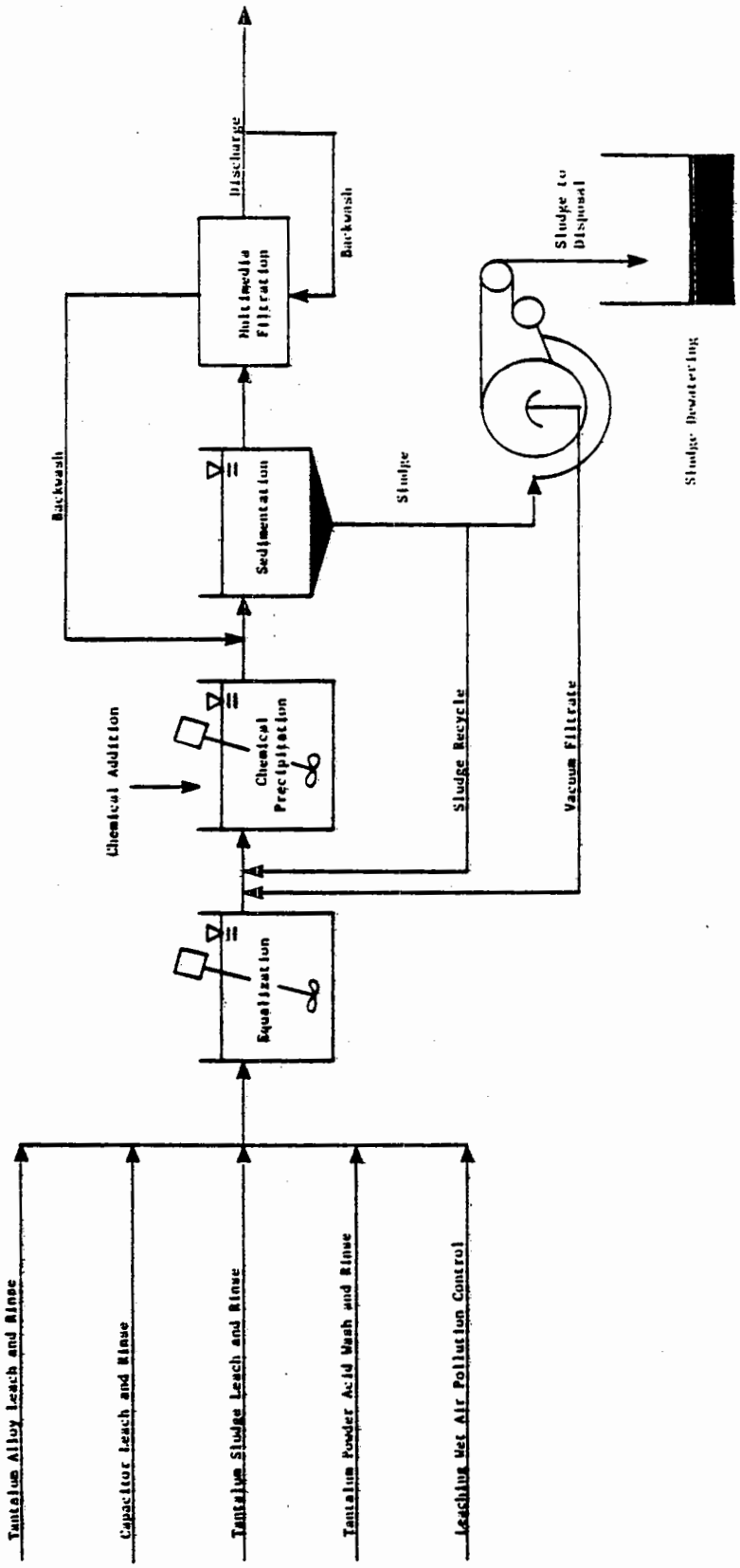

Figure X-2

BAT TREATMENT SCHEME FOR OPTION C

THIS PAGE INTENTIONALLY LEFT BLANK

SECTION XI

NEW SOURCE PERFORMANCE STANDARDS

The basis for new source performance standards (NSPS) is the best available demonstrated technology (BDT). New plants have the opportunity to design the best and most efficient production processes and wastewater treatment technologies without facing the added costs and restrictions encountered in retrofitting an existing plant. Therefore, EPA has considered the best demonstrated process changes, in-plant controls, and end-of-pipe treatment technologies which reduce pollution to the maximum extent feasible.

This section describes the technologies for treatment of wastewater from new sources and presents mass discharge standards for regulated pollutants for NSPS in the secondary tantalum subcategory, based on the selected treatment technology.

TECHNICAL APPROACH TO NSPS

New source performance standards are equivalent to the best available technology (BAT) selected for currently existing secondary tantalum plants. This result is a consequence of careful review by the Agency of a wide range of technical options for new source treatment systems which is discussed in Section IX of the General Development Document. Additionally, there was nothing found to indicate that the wastewater flows and characteristics of new plants would not be similar to those from existing plants, since the processes used by new sources are not expected to differ from those used at existing sources. Consequently, BAT production normalized discharge rates, which are based on the best existing practices of the subcategory, can also be applied to new sources. These rates are presented in Table XI-1 (page 4629).

Treatment technologies considered for the NSPS options are identical to the treatment technologies considered for the BAT options. These options are:

OPTION A

- Chemical precipitation and sedimentation

OPTION C

- Chemical precipitation and sedimentation
- Multimedia filtration

NSPS OPTION SELECTION - PROPOSAL

EPA proposed that the best available demonstrated technology for the secondary tantalum subcategory be equivalent to Option C

(chemical precipitation, sedimentation, and multimedia filtration).

The wastewater flow rates for proposed NSPS are the same as the proposed BAT flow rates. Flow reduction measures for NSPS were not considered feasible because no new demonstrated technologies existed within the subcategory that improved on water use and discharge practices. Therefore, EPA concluded that flow reduction beyond the allowances proposed for BAT was unachievable, and NSPS flow rates should be equal to those for BAT.

NSPS OPTION SELECTION - PROMULGATION

EPA is promulgating NSPS for the secondary tantalum subcategory based on Option C (chemical precipitation, sedimentation, and multimedia filtration). This technology is demonstrated by 25 plants in the nonferrous metals manufacturing category. The wastewater flow rates for promulgated NSPS are the same as the promulgated BAT flow rates. Flow reduction measures for NSPS are not feasible, because dry scrubbing is not demonstrated for controlling emissions from acid leaching operations. The nature of these emissions (acid fumes, hot particulate matter) technically precludes the use of dry scrubbers. Therefore, EPA is including an allowance from this source at NSPS equivalent to that promulgated for BAT. EPA also does not believe that new plants could achieve any additional flow reduction beyond the 92 percent scrubber effluent recycle presently practiced in the industry.

REGULATED POLLUTANT PARAMETERS

The Agency has no reason to believe that the pollutants that will be found in treatable concentrations in processes within new sources will be any different than with existing sources. Accordingly, pollutants and pollutant parameters selected for limitation under NSPS, in accordance with the rationale of Sections VI and X, are identical to those selected for BAT. The conventional pollutant parameters TSS and pH are also selected for limitation.

NEW SOURCE PERFORMANCE STANDARDS

The NSPS discharge flows for each wastewater source are the same as the discharge rates for BAT and are shown in Table XI-1. The mass of pollutant allowed to be discharged per mass of product is calculated by multiplying the appropriate achievable concentration (mg/l) by the production normalized wastewater discharge flows (l/kkg). The results of these calculations are the production-based new source performance standards. These standards are presented in Table XI-2.

Table XI-1

NSPS WASTEWATER DISCHARGE RATES FOR THE SECONDARY TANTALUM SUBCATEGORY

Wastewater Stream	NSPS Normalized Discharge Rate		Production Normalizing Parameter
	l/kkg	gal/ton	
Tantalum Alloy Leach and Rinse	230,600	55,261	Tantalum powder produced
Capacitor Leach and Rinse	20,200	4,841	Tantalum powder produced from leaching
Tantalum Sludge Leach and Rinse	205,300	49,198	Equivalent pure tantalum powder produced
Tantalum Powder Acid Wash and Rinse	350	84	Tantalum powder produced
Leaching Wet Air Pollution Control	4,880	1,169	Equivalent pure tantalum powder produced

TABLE XI-2

NSPS FOR THE SECONDARY TANTALUM SUBCATEGORY

(a) Tantalum Alloy Leach and Rinse NSPS

Pollutant or pollutant property	Maximum for any one day	Maximum for monthly average
mg/kg (lb/million lbs) of tantalum powder produced		
Antimony	445.100	198.300
*Copper	295.200	140.700
*Lead	64.570	29.980
*Nickel	126.800	85.320
Silver	66.870	27.670
*Zinc	235.200	96.850
*Tantalum	103.800	---
*TSS	3,459.000	2,767.000
*pH	Within the range of 7.5 to 10.0 at all times	

(b) Capacitor Leach and Rinse NSPS

Pollutant or pollutant property	Maximum for any one day	Maximum for monthly average
mg/kg (lb/million lbs) of tantalum powder produced from leaching		
Antimony	38.990	17.370
*Copper	25.860	12.320
*Lead	5.656	2.626
*Nickel	11.110	7.474
Silver	5.858	2.424
*Zinc	20.600	8.484
*Tantalum	9.090	---
*TSS	303.000	242.400
*pH	Within the range of 7.5 to 10.0 at all times	

*Regulated Pollutant

TABLE XI-2 (Continued)

NSPS FOR THE SECONDARY TANTALUM SUBCATEGORY

(c) Tantalum Sludge Leach and Rinse NSPS

Pollutant or pollutant property	Maximum for any one day	Maximum for monthly average
mg/kg (lb/million lbs) of equivalent pure tantalum powder produced		
Antimony	396.200	176.600
*Copper	262.800	125.200
*Lead	57.480	26.690
*Nickel	112.900	75.960
Silver	59.540	24.640
*Zinc	209.400	86.230
*Tantalum	92.390	---
*TSS	3,080.000	2,464.000
*pH Within the range of 7.5 to 10.0 at all times		

(d) Tantalum Powder Acid Wash and Rinse NSPS

Pollutant or pollutant property	Maximum for any one day	Maximum for monthly average
mg/kg (lb/million lbs) of tantalum powder produced		
Antimony	0.676	0.301
*Copper	0.448	0.214
*Lead	0.098	0.046
*Nickel	0.193	0.130
Silver	0.102	0.042
*Zinc	0.357	0.147
*Tantalum	0.158	---
*TSS	5.250	4.200
*pH Within the range of 7.5 to 10.0 at all times		

*Regulated Pollutant

Table XI-2 (Continued)

NSPS FOR THE SECONDARY TANTALUM SUBCATEGORY

(e) Leaching Wet Air Pollution Control NSPS

Pollutant or pollutant property	Maximum for any one day	Maximum for monthly average
mg/kg (lb/million lbs) of equivalent pure tantalum powder produced		
Antimony	9.418	4.197
*Copper	6.246	2.977
*Lead	1.366	0.634
*Nickel	2.684	1.806
Silver	1.415	0.586
*Zinc	4.978	2.050
*Tantalum	2.196	---
*TSS	73.200	58.560
*pH Within the range of 7.5 to 10.0 at all times		

*Regulated Pollutant

SECTION XII

PRETREATMENT STANDARDS

This section describes the control and treatment technologies for pretreatment of process wastewaters from new sources in the secondary tantalum subcategory. PSES are designed to prevent the discharge of pollutants which pass through, interfere with, or are otherwise incompatible with the operation of publicly owned treatment works (POTW). The Clean Water Act requires pretreatment for pollutants, such as toxic metals, that limit POTW sludge management alternatives. New indirect discharge facilities, like new direct discharge facilities, have the opportunity to incorporate the best available demonstrated technologies, including process changes, in-plant controls, and end-of-pipe treatment technologies, and to use plant site selection to ensure adequate treatment system installation. Pretreatment standards are to be technology based, analogous to the best available technology for removal of toxic pollutants. Pretreatment standards for regulated pollutants are presented based on the selected control and treatment technology.

Pretreatment standards for existing sources (PSES) will not be promulgated for the secondary tantalum subcategory because there are no existing indirect dischargers in this subcategory. However, pretreatment standards for new sources (PSNS) will be promulgated.

TECHNICAL APPROACH TO PRETREATMENT

Before proposing and promulgating pretreatment standards, the Agency examines whether the pollutants discharged by the industry pass through the POTW or interfere with the POTW operation or its chosen sludge disposal practices. In determining whether pollutants pass through a well-operated POTW achieving secondary treatment, the Agency compares the percentage of a pollutant removed by POTW with the percentage removed by direct dischargers applying the best available technology economically achievable. A pollutant is deemed to pass through the POTW when the average percentage removed nationwide by well-operated POTW meeting secondary treatment requirements, is less than the percentage removed by direct dischargers complying with BAT effluent standards guidelines for that pollutant.

This definition of pass through satisfies the two competing objectives set by Congress that standards for indirect dischargers be equivalent to standards for direct dischargers while at the same time the treatment capability and performance of the POTW be recognized and taken into account in regulating the discharge of pollutants from indirect dischargers. The Agency compares percentage removal rather than the mass or concentration of pollutants discharged because the latter would not take into account the mass of pollutants discharged to the POTW from non-

industrial sources or the dilution of the pollutants in the POTW effluent to lower concentrations due to the addition of large amounts of non-industrial wastewater.

PRETREATMENT STANDARDS FOR NEW SOURCES

Options for pretreatment of wastewaters from new sources are based on increasing the effectiveness of end-of-pipe treatment technologies. All in-plant changes and applicable end-of-pipe treatment processes have been discussed previously in Sections X and XI. The options for PSNS, therefore, are the same as the BAT options discussed in Section X.

A description of each option is presented in Section X. Treatment technologies considered for the PSNS options are:

OPTION A

- Chemical precipitation and sedimentation

OPTION C

- Chemical precipitation and sedimentation
- Multimedia filtration

PSNS OPTION SELECTION - PROPOSAL

EPA proposed PSNS for the secondary tantalum subcategory based on Option C, chemical precipitation, sedimentation, and multimedia filtration. The wastewater discharge rates proposed for PSNS are equivalent to the proposed BAT discharge rates. No flow reduction measures for PSNS were considered feasible beyond the rates proposed for BAT.

PSNS OPTION SELECTION - PROMULGATION

EPA has selected Option C (chemical precipitation, sedimentation, and multimedia filtration) as the regulatory approach for pretreatment standards for new sources on the basis that it achieves effective removal of toxic pollutants and is demonstrated by 25 plants throughout the nonferrous metals manufacturing category.

The wastewater discharge rates for PSNS are identical to the promulgated BAT discharge rates for each waste stream. The PSNS discharge rates are shown in Table XII-1 (page 4636). No additional flow reduction measures for PSNS are feasible. EPA does not believe that new plants could achieve flow reduction beyond the 92 percent scrubber effluent recycle presently practiced in the industry.

REGULATED POLLUTANT PARAMETERS

Pollutants selected for limitation, in accordance with the rationale of Sections VI and X, are identical to those selected

for limitation for BAT. It is necessary to promulgate PSNS to prevent the pass-through of copper, lead, nickel, and zinc, which are the limited pollutants. These toxic pollutants are removed by a well-operated POTW achieving secondary treatment at an average of 48 percent while BAT level technology removes approximately 99 percent.

PRETREATMENT STANDARDS

Pretreatment standards are based on the pollutant concentrations achievable from the selected treatment technology, (Option C), and the discharge rates determined in Section X for BAT. A mass of pollutant per mass of product (mg/kg) allocation is given for each subdivision within the subcategory. This pollutant allocation is based on the product of the treatable concentration from the promulgated treatment (mg/l) and the production normalized wastewater discharge rate (l/kkg). The achievable treatment concentrations for BAT are identical to those for PSNS. PSNS are presented in Table XII-2 (page 4637).

Table XII-1

PSNS WASTEWATER DISCHARGE RATES FOR THE SECONDARY TANTALUM SUBCATEGORY

Wastewater Stream	PSNS Normalized Discharge Rate 1/kkg	PSNS Normalized Discharge Rate gal/ton	Production Normalizing Parameter
Tantalum Alloy Leach and Rinse	230,600	55,261	Tantalum powder produced
Capacitor Leach and Rinse	20,200	4,841	Tantalum powder produced from leaching
Tantalum Sludge Leach and Rinse	205,300	49,198	Equivalent pure tantalum powder produced
Tantalum Powder Acid Wash and Rinse	350	84	Tantalum powder produced
Leaching Wet Air Pollution Control	4,880	1,169	Equivalent pure tantalum powder produced

TABLE XII-2

PSNS FOR THE SECONDARY TANTALUM SUBCATEGORY

(a) Tantalum Alloy Leach and Rinse PSNS

Pollutant or pollutant property	Maximum for any one day	Maximum for monthly average
mg/kg (lb/million lbs) of tantalum powder produced		
Antimony	445.100	198.300
*Copper	295.200	140.700
*Lead	64.570	29.980
*Nickel	126.800	85.320
Silver	66.870	27.670
*Zinc	235.200	96.850
*Tantalum	103.800	---

(b) Capacitor Leach and Rinse PSNS

Pollutant or pollutant property	Maximum for any one day	Maximum for monthly average
mg/kg (lb/million lbs) of tantalum powder produced from leaching		
Antimony	38.990	17.370
*Copper	25.860	12.320
*Lead	5.656	2.626
*Nickel	11.110	7.474
Silver	5.858	2.424
*Zinc	20.600	8.484
*Tantalum	9.090	---

*Regulated Pollutant

TABLE XII-2 (Continued)

PSNS FOR THE SECONDARY TANTALUM SUBCATEGORY

(c) Tantalum Sludge Leach and Rinse PSNS

Pollutant or pollutant property	Maximum for any one day	Maximum for monthly average
mg/kg (lb/million lbs) of equivalent pure tantalum powder produced		
Antimony	396.200	176.600
*Copper	262.800	125.200
*Lead	57.480	26.690
*Nickel	112.900	75.960
Silver	59.540	24.640
*Zinc	209.400	86.230
*Tantalum	92.390	---

(d) Tantalum Powder Acid Wash and Rinse PSNS

Pollutant or pollutant property	Maximum for any one day	Maximum for monthly average
mg/kg (lb/million lbs) of tantalum powder produced		
Antimony	0.676	0.301
*Copper	0.448	0.214
*Lead	0.098	0.046
*Nickel	0.193	0.130
Silver	0.102	0.042
*Zinc	0.357	0.147
*Tantalum	0.158	---

*Regulated Pollutant

TABLE XII-2 (Continued)

PSNS FOR THE SECONDARY TANTALUM SUBCATEGORY

(e) Leaching Wet Air Pollution Control PSNS

Pollutant or pollutant property	Maximum for any one day	Maximum for monthly average
mg/kg (lb/million lbs) of equivalent pure tantalum powder produced		
Antimony	9.418	4.197
*Copper	6.246	2.977
*Lead	1.366	0.634
*Nickel	2.684	1.806
Silver	1.415	0.586
*Zinc	4.978	2.050
*Tantalum	2.196	---

*Regulated Pollutant

THIS PAGE INTENTIONALLY LEFT BLANK

SECTION XIII

BEST CONVENTIONAL POLLUTANT CONTROL TECHNOLOGY

EPA is not promulgating best conventional pollutant control technology (BCT) for the secondary tantalum subcategory at this time.

THIS PAGE INTENTIONALLY LEFT BLANK

NONFERROUS METALS MANUFACTURING POINT SOURCE CATEGORY

DEVELOPMENT DOCUMENT SUPPLEMENT

for the

Secondary Uranium Subcategory

William K. Reilly
Administrator

Rebecca Hanmer
Acting Assistant Administrator for Water

Martha Prothro, Director
Office of Water Regulations and Standards

Thomas P. O'Farrell, Director
Industrial Technology Division

Ernst P. Hall, P.E., Chief
Metals Industry Branch
and
Technical Project Officer

May 1989

U.S. Environmental Protection Agency
Office of Water
Office of Water Regulations and Standards
Industrial Technology Division
Washington, D. C. 20460

TABLE OF CONTENTS

Section		Page
I	SUMMARY	4653
II	CONCLUSIONS	4655
III	SUBCATEGORY PROFILE	4667
	Description of Secondary Uranium Production	4667
	Raw Materials	4667
	Uranium Tetrafluoride Production	4668
	Magnesium Reduction Process	4669
	Process Wastewater Sources	4669
	Other Wastewater Sources	4669
	Age, Production, and Process Profile	4669
IV	SUBCATEGORIZATION	4677
	Factors Considered in Subdividing the Secondary Uranium Subcategory	4677
	Other Factors	4678
	Production Normalizing Parameters	4678
V	WATER USE AND WASTEWATER CHARACTERISTICS	4681
	Wastewater Flow Rates	4682
	Wastewater Characteristics Data	4682
	Data Collection Portfolio	4683
	Field Sampling Data	4683
	Wastewater Characteristics and Flows by Subdivision	4684
	Refinery Sump Filtrate	4684
	Slag Leach Reslurry	4685
	Digestion Wet Air Pollution Control	4685
	Solvent Extraction Raffinate Filtrate	4685
	Evaporation and Denitration Wet Air Pollution Control	4685
	Hydrofluorination Water Scrubber	4686
	Hydrofluorination Alkaline Scrubber	4686
	Magnesium Reduction and Casting Floor Wash Water	4686
	Laundry Wastewater	4687

TABLE OF CONTENTS (Continued)

Section		Page
VI	SELECTION OF POLLUTANT PARAMETERS	4729
	Conventional and Nonconventional Pollutant Parameters Selected	4729
	Toxic Priority Pollutants	4730
	Toxic Pollutants Never Detected	4730
	Toxic Pollutants Present Below Concentrations Achievable by Treatment	4730
	Toxic Pollutants Detected in a Small Number of Sources	4730
	Toxic Pollutants Selected for Further Consideration in Establishing Limitations and Standards	4731
VII	CONTROL AND TREATMENT TECHNOLOGIES	4739
	Current Control and Treatment Practices	4739
	Refinery Sump Filtrate	4739
	Slag Leach Reslurry	4739
	Digestion Wet Air Pollution Control	4740
	Solvent Extraction Raffinate Filtrate	4740
	Evaporation and Denitration Wet Air Pollution Control	4740
	Hydrofluorination Water Scrubber	4740
	Hydrofluorination Alkaline Scrubber	4740
	Magnesium Reduction and Casting Floor Wash Water	4741
	Laundry Wastewater	4741
	Control and Treatment Options	4741
	Option A	4741
	Option C	4742
VIII	COSTS, ENERGY, AND NONWATER QUALITY ASPECTS	4743
	Treatment Options for Existing Sources	4743
	Option A	4743
	Option C	4743
	Cost Methodology	4743
	Nonwater Quality Aspects	4744
	Energy Requirements	4744
	Solid Waste	4744
	Air Pollution	4745

TABLE OF CONTENTS (Continued)

Section		Page
IX	BEST PRACTICABLE CONTROL TECHNOLOGY CURRENTLY AVAILABLE	4747
	Technical Approach to BPT	4747
	Industry Cost and Pollutant Removal Estimates	4749
	BPT Option Selection - Proposal	4749
	BPT Option Selection - Promulgation	4750
	Wastewater Discharge Rates	4750
	Refinery Sump Filtrate	4750
	Slag Leach Reslurry	4751
	Digestion Wet Air Pollution Control	4751
	Solvent Extraction Raffinate Filtrate	4752
	Evaporation and Denitration Wet Air Pollution Control	4752
	Hydrofluorination Water Scrubber	4752
	Hydrofluorination Alkaline Scrubber	4753
	Magnesium Reduction and Casting Floor Wash Water	4753
	Laundry Wastewater	4753
	Regulated Pollutant Parameters	4754
	Effluent Limitations	4754
X	BEST AVAILABLE TECHNOLOGY ECONOMICALLY ACHIEVABLE	4763
	Technical Approach to BAT	4763
	Option A	4764
	Option C	4764
	Industry Cost and Pollutant Removal Estimates	4764
	Pollutant Removal Estimates	4764
	Compliance Costs	4765
	BAT Option Selection - Proposal	4765
	BAT Option Selection - Promulgation	4766
	Wastewater Discharge Rates	4766
	Regulated Pollutant Parameters	4767
	Effluent Limitations	4768
XI	NEW SOURCE PERFORMANCE STANDARDS	4779
	Technical Approach to NSPS	4779
	NSPS Option Selection - Proposal	4780
	NSPS Option Selection - Promulgation	4780
	Regulated Pollutant Parameters	4780
	New Source Performance Standards	4780

TABLE OF CONTENTS (Continued)

Section		Page
XII	PRETREATMENT STANDARDS	4787
	Technical Approach to Pretreatment	4787
	Pretreatment Standards for New Sources	4788
	PSNS Option Selection	4788
	Regulated Pollutant Parameters	4788
	Pretreatment Standards for New Sources	4789
XIII	BEST CONVENTIONAL POLLUTANT CONTROL TECHNOLOGY	4797

LIST OF TABLES

Table	Title	Page
III-1	Initial Operating Year (Range) Summary of Plants in the Secondary Uranium Subcategory by Discharge Type	4671
III-2	Production Ranges for the Secondary Uranium Subcategory	4672
III-3	Summary of Secondary Uranium Subcategory Process and Associated Waste Streams	4673
V-1	Water Use and Discharge Rates for Refinery Sump Filtrate	4688
V-2	Water Use and Discharge Rates for Slag Leach Reslurry	4688
V-3	Water Use and Discharge Rates for Digestion Wet Air Pollution Control	4688
V-4	Water Use and Discharge Rates for Solvent Extraction Raffinate Filtrate	4689
V-5	Water Use and Discharge Rates for Evaporation and Denitration Wet Air Pollution Control	4689
V-6	Water Use and Discharge Rates for Hydrofluorination Water Scrubber	4689
V-7	Water Use and Discharge Rates for Hydrofluorination Alkaline Scrubber	4690
V-8	Water Use and Discharge Rates for Magnesium Reduction and Casting Floor Wash Water	4690
V-9	Water Use and Discharge Rates for Laundry Wastewater	4690
V-10	Refinery Sump Filtrate Sampling Data	4691
V-11	Solvent Extraction Raffinate After Lime Addition and Sedimentation Sampling Data	4694
V-12	Solvent Extraction Raffinate Filtrate Sampling Data	4702

LIST OF TABLES

Table	Title	Page
V-13	Hydrofluorination Alkaline (KOH) Scrubber Raw Wastewater Sampling Data	4706
V-14	Reduction and Casting Floor Wash Raw Wastewater Sampling Data	4709
V-15	Uranium Laundry/Lab Waste Raw Wastewater Sampling Data	4719
V-16	Plant 6 Filtrate Raw Wastewater Sampling Data	4723
VI-1	Frequency of Occurrence of Priority Pollutants Secondary Uranium Subcategory Raw Wastewater	4733
VI-2	Toxic Pollutants Never Detected	4736
VI-3	Cost of Compliance for the Secondary Uranium Subcategory Direct Discharges	4746
IX-1	BPT Wastewater Discharge Rates for the Secondary Uranium Subcategory	4755
IX-2	BPT Mass Limitations for the Secondary Uranium Subcategory	4756
X-1	Pollutant Removal Estimates for Direct Dischargers	4769
X-2	Cost of Compliance for the Secondary Uranium Subcategory	4770
X-3	BAT Wastewater Discharge Rates for the Secondary Uranium Subcategory	4771
X-4	BAT Mass Limitations for the Secondary Uranium Subcategory	4772
XI-1	NSPS Wastewater Discharge Rates for the Secondary Uranium Subcategory	4781
XI-2	NSPS for the Secondary Uranium Subcategory	4782
XII-1	PSNS Wastewater Discharge Rates for the Secondary Uranium Subcategory	4790
XII-2	PSNS for the Secondary Uranium Subcategory	4791

LIST OF FIGURES

Figure	Title	Page
III-1	Uranium Tetrafluoride Production Process in the Secondary Uranium Subcategory	4674
III-2	Magnesium Reduction Process in the Secondary Uranium Subcategory	4675
III-3	Geographic Locations of the Secondary Uranium Subcategory Plants	4676
V-1	Sampling Locations at Secondary Uranium Plant A	4726
V-2	Sampling Locations at Secondary Uranium Plant B	4727
IX-1	BPT Treatment Scheme for the Secondary Uranium Subcategory	4761
X-1	BAT Treatment Scheme for Option A	4777
X-2	BAT Treatment Scheme for Option C	4778

THIS PAGE INTENTIONALLY LEFT BLANK

SECTION I

SUMMARY

This document provides the technical basis for promulgating effluent limitations based on best practicable technology (BPT) and best available technology (BAT) for existing direct dischargers, standards of performance for new source direct dischargers (NSPS), and pretreatment standards for new indirect dischargers (PSNS).

The secondary uranium subcategory consists of three plants. Of the three plants, two discharge directly to surface waters, and one achieves zero discharge of process wastewater.

EPA first studied the secondary uranium subcategory to determine whether differences in raw materials, final products, manufacturing processes, equipment, age and size of plants, or water usage required the development of separate effluent limitations and standards for different segments of the subcategory. This involved a detailed analysis of wastewater discharge and treated effluent characteristics, including the sources and volume of water used, the processes used, the sources of pollutants and wastewaters in the plant, and the constituents of wastewaters including priority pollutants. As a result, nine subdivisions or building blocks have been identified for this subcategory that warrant separate effluent limitations. These include:

(a) Refinery sump filtrate,
(b) Slag leach reslurry,
(c) Digestion wet air pollution control,
(d) Solvent extraction raffinate filtrate,
(e) Evaporation and denitration wet air pollution control,
(f) Hydrofluorination water scrubber,
(g) Hydrofluorination alkaline scrubber,
(h) Magnesium reduction and casting floor wash water, and
(i) Laundry wastewater.

EPA also identified several distinct control and treatment technologies (both in-plant and end-of-pipe) applicable to the secondary uranium subcategory. The Agency analyzed both historical and newly generated data on the performance of these technologies, including their nonwater quality environmental impacts and air quality, solid waste generation, and energy requirements. EPA also studied various flow reduction techniques reported in the data collection portfolios (dcp) and plant visits.

Engineering costs were prepared for each of the control and treatment options considered for the subcategory. These costs were then used by the Agency to estimate the impact of implementing the various options on the subcategory. For each

control and treatment option that the Agency found to be most effective and technically feasible in controlling the discharge of pollutants, we estimated the number of potential closures, number of employees affected, and impact on price. These results are reported in a separate document entitled "The Economic Impact Analysis of Effluent Limitations and Standards for the Nonferrous Metals Manufacturing Industry."

After examining the various treatment technologies, the Agency has identified BPT to represent the average of the best existing technology. Metals removal based on chemical precipitation and sedimentation technology is the basis for the BPT limitations. To meet the BPT effluent limitations based on this technology, the secondary uranium subcategory is expected to incur an estimated capital cost of $54,800 and an annual cost of $90,400.

For BAT, filtration is added as an effluent polishing step to the BPT end-of-pipe treatment scheme. To meet the BAT effluent limitations based on this technology, the secondary uranium subcategory is estimated to incur a capital cost of $88,000 and an annual cost of $106,700.

NSPS is equivalent to BAT. In selecting NSPS, EPA recognizes that new plants have the opportunity to implement the best and most efficient manufacturing processes and treatment technology. As such, the technology basis of BAT has been determined as the best demonstrated technology.

PSES is not being promulgated for this subcategory because there are no existing indirect dischargers in the secondary uranium subcategory. For PSNS, the Agency selected pretreatment and end-of-pipe treatment techniques equivalent to BAT.

The best conventional technology (BCT) replaces BAT for the control of conventional pollutants. BCT is not being promulgated at this time because the methodology for BCT has not yet been finalized.

The mass limitations and standards for BPT, BAT, NSPS, and PSNS are presented in Section II.

SECTION II

CONCLUSIONS

EPA has divided the secondary uranium subcategory into nine subdivisions for the purpose of effluent limitations and standards. These subdivisions are:

(a) Refinery sump filtrate,
(b) Slag leach reslurry,
(c) Digestion wet air pollution control,
(d) Solvent extraction raffinate filtrate,
(e) Evaporation and denitration wet air pollution control,
(f) Hydrofluorination water scrubber,
(g) Hydrofluorination alkaline scrubber,
(h) Magnesium reduction and casting floor wash water, and
(i) Laundry wastewater.

BPT is promulgated based on the performance achievable by the application of chemical precipitation and sedimentation technology. The following BPT effluent limitations are promulgated:

(a) Refinery Sump Filtrate BPT

Pollutant or Pollutant Property	Maximum for Any One Day	Maximum for Monthly Average
mg/kg (lb/million lbs) of uranium processed in the refinery		
Chromium (total)	32.270	13.200
Copper	139.300	73.340
Nickel	140.800	93.140
Fluoride	2,567.000	1,459.000
TSS	3,007.000	1,430.000
pH	Within the range of 7.5 to 10.0 at all times	

b) Slag Leach Reslurry BPT

Pollutant or Pollutant Property	Maximum for Any One Day	Maximum for MonthlY Average
mg/kg (lb/million lbs) of uranium processed in the refinery		
Chromium (total)	2.009	0.822
Copper	8.675	4.566
Nickel	8.767	5.799
Fluoride	1?9.800	90.860
TSS	187.200	89.0?0
pH	Within the range of 7.5 to 10.0 at all times	

(c) Digestion Wet Air Pollution Control BPT

Pollutant or Pollutant Property	Maximum for Any One Day	Maximum for Monthly Average
mg/kg (lb/million lbs) of uranium processed in the refinery		
Chromium (total)	0.000	0.000
Copper	0.000	0.000
Nickel	0.000	0.000
Fluoride	0.000	0.000
TSS	0.000	0.000
pH	Within the range of 7.5 to 10.0 at all times	

(d) Solvent Extraction Raffinate Filtrate BPT

Pollutant or Pollutant Property	Maximum for Any One Day	Maximum for Monthly Average
mg/kg (lb/million lbs) of uranium processed in the refinery		
Chromium (total)	2.802	1.146
Copper	12.100	6.369
Nickel	12.230	8.089
Fluoride	222.900	126.700
TSS	261.100	124.200
pH	Within the range of 7.5 to 10.0 at all times	

(e) Evaporation and Denitration Wet Air Pollution Control BPT

Pollutant or Pollutant Property	Maximum for Any One Day	Maximum for Monthly Average
mg/kg (lb/million lbs) of uranium trioxide produced		
Chromium (total)	0.000	0.000
Copper	0.000	0.000
Nickel	0.000	0.000
Fluoride	0.000	0.000
TSS	0.000	0.000
pH	Within the range of 7.5 to 10.0 at all times	

(f) Hydrofluorination Water Scrubber BPT

Pollutant or Pollutant Property	Maximum for Any One Day	Maximum for Monthly Average
mg/kg (lb/million lbs) of uranium tetrafluoride produced		
Chromium (total)	0.000	0.000
Copper	0.000	0.000
Nickel	0.000	0.000
Fluoride	0.000	0.000
TSS	0.000	0.000
pH	Within the range of 7.5 to 10.0 at all times	

(g) Hydrofluorination Alkaline Scrubber BPT

Pollutant or Pollutant Property	Maximum for Any One Day	Maximum for Monthly Average
mg/kg (lb/million lbs) of uranium tetrafluoride produced		
Chromium (total)	0.009	0.004
Copper	0.038	0.020
Nickel	0.038	0.025
Fluoride	0.700	0.398
TSS	0.820	0.390
pH	Within the range of 7.5 to 10.0 at all times	

(h) Magnesium Reduction and Casting Floor Wash BPT

Pollutant or Pollutant Property	Maximum for Any One Day	Maximum for Monthly Average
mg/kg (lb/million lbs) of uranium produced by magnesium reduction		
Chromium (total)	0.013	0.005
Copper	0.057	0.030
Nickel	0.058	0.038
Fluoride	1.054	0.599
TSS	1.234	0.587
pH	Within the range of 7.5 to 10.0 at all times	

(i) Laundry Wastewater BPT

Pollutant or Pollutant Property	Maximum for Any One Day	Maximum for Monthly Average
mg/kg (lb/million lbs) of uranium produced by magnesium reduction		
Chromium (total)	0.084	0.035
Copper	0.365	0.192
Nickel	0.369	0.244
Fluoride	6.720	3.821
TSS	7.872	3.744
pH	Within the range of 7.5 to 10.0 at all times	

BAT is promulgated based on the performance achievable by the application of chemical precipitation, sedimentation, and multimedia filtration technology. The following BAT effluent limitations are promulgated:

(a) Refinery Sump Filtrate BAT

Pollutant or Pollutant Property	Maximum for Any One Day	Maximum for Monthly Average
mg/kg (lb/million lbs) of uranium processed in the refinery		
Chromium (total)	27.140	11.000
Copper	93.880	44.740
Nickel	40.340	27.140
Fluoride	2,567.000	1,459.000

(b) Slag Leach Reslurry BAT

Pollutant or Pollutant Property	Maximum for Any One Day	Maximum for Monthly Average
mg/kg (lb/million lbs) of uranium processed in the refinery		
Chromium (total)	1.689	0.685
Copper	5.844	2.785
Nickel	2.511	1.689
Fluoride	159.800	90.860

(c) Digestion Wet Air Pollution Control BAT

Pollutant or Pollutant Property	Maximum for Any One Day	Maximum for Monthly Average
mg/kg (lb/million lbs) of uranium processed in the refinery		
Chromium (total)	0.000	0.000
Copper	0.000	0.000
Nickel	0.000	0.000
Fluoride	0.000	0 000

(d) Solvent Extraction Raffinate Filtrate BAT

Pollutant or Pollutant Property	Maximum for Any One Day	Maximum for Monthly Average
mg/kg (lb/million lbs) of uranium processed in the refinery		
Chromium (total)	2.357	0.955
Copper	8.152	3.885
Nickel	3.503	2.357
Fluoride	222.900	126.700

(e) Evaporation and Denitration Wet Air Pollution Control BAT

Pollutant or Pollutant Property	Maximum for Any One Day	Maximum for Monthly Average
mg/kg (lb/million lbs) of uranium trioxide produced		
Chromium (total)	0.000	0.000
Copper	0.000	0.000
Nickel	0.000	0.000
Fluoride	0.000	0.000

(f) Hydrofluorination Water Scrubber BAT

Pollutant or Pollutant Property	Maximum for Any One Day	Maximum for Monthly Average
mg/kg (lb/million lbs) of uranium tetrafluoride produced		
Chromium (total)	0.000	0.000
Copper	0.000	0.000
Nickel	0.000	0.000
Fluoride	0.000	0.000

(g) Hydrofluorination Alkaline Scrubber BAT

Pollutant or Pollutant Property	Maximum for Any One Day	Maximum for Monthly Average
mg/kg (lb/million lbs) of uranium tetrafluoride produced		
Chromium (total)	0.007	0.003
Copper	0.026	0.012
Nickel	0.011	0.007
Fluoride	0.700	0.398

(h) Magnesium Reduction and Casting Floor Wash BAT

Pollutant or Pollutant Property	Maximum for Any One Day	Maximum for Monthly Average
mg/kg (lb/million lbs) of uranium produced by magnesium reduction		
Chromium (total)	0.011	0.005
Copper	0.039	0.018
Nickel	0.017	0.011
Fluoride	1.054	0.599

(i) Laundry Wastewater BAT

Pollutant or Pollutant Property	Maximum for Any One Day	Maximum for Monthly Average
mg/kg (lb/million lbs) of uranium produced by magnesium reduction		
Chromium (total)	0.036	0.014
Copper	0.123	0.059
Nickel	0.053	0.036
Fluoride	3.360	1.910

NSPS are promulgated based on the performance achievable by the application of chemical precipitation, sedimentation, and multimedia filtration technology. The following effluent standards are promulgated for new sources:

(a) Refinery Sump Filtrate NSPS

Pollutant or Pollutant Property	Maximum for Any One Day	Maximum for Monthly Average
mg/kg (lb/million lbs) of uranium processed in the refinery		
Chromium (total)	27.140	11.000
Copper	93.880	44.740
Nickel	40.340	27.140
Fluoride	2,567.000	1,459.000
TSS	1,100.000	880.100
pH	Within the range of 7.5 to 10.0 at all times	

(b) Slag Leach Reslurry NSPS

Pollutant or Pollutant Property	Maximum for Any One Day	Maximum for Monthly Average
mg/kg (lb/million lbs) of uranium processed in the refinery		
Chromium (total)	1.689	0.685
Copper	5.844	2.785
Nickel	2.511	1.689
Fluoride	159.800	90.860
TSS	68.490	54.790
pH	Within the range of 7.5 to 10.0 at all times	

(c) Digestion Wet Air Pollution Control NSPS

Pollutant or Pollutant Property	Maximum for Any One Day	Maximum for Monthly Average
mg/kg (lb/million lbs) of uranium processed in the refinery		
Chromium (total)	0.000	0.000
Copper	0.000	0.000
Nickel	0.000	0.000
Fluoride	0.000	0.000
TSS	0.000	0.000
pH	Within the range of 7.5 to 10.0 at all times	

(d) Solvent Extraction Raffinate Filtrate NSPS

Pollutant or Pollutant Property	Maximum for Any One Day	Maximum for Monthly Average
mg/kg (lb/million lbs) of uranium processed in the refinery		
Chromium (total)	2.357	0.955
Copper	8.152	3.885
Nickel	3.503	2.357
Fluoride	222.900	126.700
TSS	95.540	76.430
pH	Within the range of 7.5 to 10 at all times	

(e) Evaporation and Denitration Wet Air Pollution Control NSPS

Pollutant or Pollutant Property	Maximum for Any One Day	Maximum for Monthly Average
mg/kg (lb/million lbs) of uranium trioxide produced		
Chromium (total)	0.000	0.000
Copper	0.000	0.000
Nickel	0.000	0.000
Fluoride	0.000	0.000
TSS	0.000	0.000
pH	Within the range of 7.5 to 10.0 at all times	

f) Hydrofluorination Water Scrubber NSPS

Pollutant or Pollutant Property	Maximum for Any One Day	Maximum for Monthly Average
mg/kg (lb/million lbs) of uranium tetrafluoride produced		
Chromium (total)	0.000	0.000
Copper	0.000	0.000
Nickel	0.000	0.000
Fluoride	0.000	0.000
TSS	0.000	0.000
pH	Within the range of 7.5 to 10.0 at all times	

(g) Hydrofluorination Alkaline Scrubber NSPS

Pollutant or Pollutant Property	Maximum for Any One Day	Maximum for Monthly Average
mg/kg (lb/million lbs) of uranium tetrafluoride produced		
Chromium (total)	0.007	0.003
Copper	0.026	0.012
Nickel	0.011	0.007
Fluoride	0.700	0.398
TSS	0.300	0.240
pH	Within the range of 7.5 to 10.0 at all times	

(h) Magnesium Reduction and Casting Floor Wash NSPS

Pollutant or Pollutant Property	Maximum for Any One Day	Maximum for Monthly Average
mg/kg (lb/million lbs) of uranium produced by magnesium reduction		
Chromium (total)	0.011	0.005
Copper	0.039	0.018
Nickel	0.017	0.011
Fluoride	1.054	0.599
TSS	0.452	0.361
pH	Within the range of 7.5 to 10.0 at all times	

(i) Laundry Wastewater NSPS

Pollutant or Pollutant Property	Maximum for Any One Day	Maximum for Monthly Average
mg/kg (lb/million lbs) of uranium produced by magnesium reduction		
Chromium (total)	0.036	0.014
Copper	0.123	0.059
Nickel	0.053	0.036
Fluoride	3.360	1.910
TSS	1.440	1.152
pH	Within the range of 7.5 to 10.0 at all times	

PSES is not being promulgated for this subcategory at this time because there are no existing indirect dischargers in the secondary uranium subcategory.

PSNS are promulgated based on the performance achievable by the application of chemical precipitation, sedimentation, and multimedia filtration technology. The following pretreatment standards are promulgated for new sources:

(a) Refinery Sump Filtrate PSNS

Pollutant or Pollutant Property	Maximum for Any One Day	Maximum for Monthly Average
mg/kg (lb/million lbs) of uranium processed in the refinery		
Chromium (total)	27.140	11.000
Copper	93.880	44.740
Nickel	40.340	27.140
Fluoride	2,567.000	1,459.000

(b) Slag Leach Reslurry PSNS

Pollutant or Pollutant Property	Maximum for Any One Day	Maximum for Monthly Average
mg/kg (lb/million lbs) of uranium processed in the refinery		
Chromium (total)	1.689	0.685
Copper	5.844	2.785
Nickel	2.511	1.689
Fluoride	159.800	90.860

(c) Digestion Wet Air Pollution Control PSNS

Pollutant or Pollutant Property	Maximum for Any One Day	Maximum for Monthly Average
mg/kg (lb/million lbs) of uranium processed in the refinery		
Chromium (total)	0.000	0.000
Copper	0.000	0.000
Nickel	0.000	0.000
Fluoride	0.000	0.000

(d) Solvent Extraction Raffinate Filtrate PSNS

Pollutant or Pollutant Property	Maximum for Any One Day	Maximum for Monthly Average
mg/kg (lb/million lbs) of uranium processed in the refinery		
Chromium (total)	2.357	0.955
Copper	8.152	3.885
Nickel	3.503	2.357
Fluoride	222.900	126.700

(e) Evaporation and Denitration Wet Air Pollution Control PSNS

Pollutant or Pollutant Property	Maximum for Any One Day	Maximum for Monthly Average
mg/kg (lb/million lbs) of uranium trioxide produced		
Chromium (total)	0.000	0.000
Copper	0.000	0.000
Nickel	0 000	0 000
Fluoride	0.000	0.000

(f) Hydrofluorination Water Scrubber PSNS

Pollutant or Pollutant Property	Maximum for Any One Day	Maximum for Monthly Average
mg/kg (lb/million lbs) of uranium tetrafluoride produced		
Chromium (total)	0.000	0.000
Copper	0.000	0.000
Nickel	0.000	0.000
Fluoride	0.000	0.000

(g) Hydrofluorination Alkaline Scrubber PSNS

Pollutant or Pollutant Property	Maximum for Any One Day	Maximum for Monthly Average
mg/kg (lb/million lbs) of uranium tetrafluoride produced		
Chromium (total)	0.007	0.003
Copper	0.026	0.018
Nickel	0.011	0.007
Fluoride	0.700	0.398

(h) Magnesium Reduction and Casting Floor Wash PSNS

Pollutant or Pollutant Property	Maximum for Any One Day	Maximum for Monthly Average
mg/kg (lb/million lbs) of uranium produced by magnesium reduction		
Chromium (total)	0.011	0.005
Copper	0.039	0.018
Nickel	0.017	0.011
Fluoride	1.054	0.599

(i) Laundry Wastewater PSNS

Pollutant or Pollutant Property	Maximum for Any One Day	Maximum for Monthly Average
mg/kg (lb/million lbs) of uranium produced by magnesium reduction		
Chromium (total)	0.036	0.014
Copper	0.123	0.059
Nickel	0.053	0.036
Fluoride	0.360	1.910

EPA is not promulgating BCT at this time for the secondary uranium subcategory.

SECTION III

SUBCATEGORY PROFILE

This section of the secondary uranium supplement describes the raw materials and processes used in producing secondary uranium and presents a profile of the secondary uranium plants identified in this study.

Secondary uranium is processed domestically as two general types of materials; slightly enriched with approximately 0.95 percent U_{235}, and depleted uranium with approximately 0.20 percent U_{235}. Natural grade uranium contains approximately 0.70 percent U_{235}. The slightly enriched material is processed at one facility operated by the U.S. Department of Energy. This material is used to fabricate fuel cores for "production reactors" which are used to produce plutonium.

The major use of depleted uranium is in ordinance applications. The source of depleted uranium is depleted uranium hexafluoride, UF_6 resulting from enrichment of natural uranium for nuclear applications. The high density and pyrophoricity of uranium metal reduced from depleted UF_6 make it ideal for use in armor penetrating ammunition. Other uses of secondary uranium are containers for spent nuclear reactor residues, radiation shielding applications, ballast and counterweights on aircraft control surfaces, and research.

DESCRIPTION OF SECONDARY URANIUM PRODUCTION

The production of secondary uranium can be divided into two distinct stages. The first stage is production of uranium tetrafluoride, UF_4, from secondary materials, and the second stage is magnesium reduction of uranium tetrafluoride to pure uranium metal. All the plants in this subcategory perform the second stage process, but only one plant produces uranium tetrafluoride from secondary materials. The secondary uranium production processes are shown schematically in Figures III-1 and III-2 (pages 4674 and 4675), and are described in the following paragraphs.

RAW MATERIALS

The raw material necessary for the production of uranium by the magnesium reduction process is uranium tetrafluoride, UF_4. This material is generally obtained from enrichment plants which produce uranium for nuclear energy applications. The enrichment process involves separation of enriched UF6 from depleted UF_6. Much of the depleted uranium hexafluoride is converted to UF4 which is subsequently used as a raw material in the magnesium reduction process. Uranium tetrafluoride is also produced from uranium-bearing scrap. One of the plants in this subcategory uses uranium scrap (mainly off-spec product or machining scrap),

residues, and magnesium reduction slag as raw materials in addition to using uranium tetrafluoride. The following discussions describe the production of uranium from secondary sources and the production of uranium metal from uranium tetrafluoride in more detail.

URANIUM TETRAFLUORIDE PRODUCTION

One plant in the secondary uranium subcategory has the capacity to manufacture uranium tetrafluoride from scrap uranium materials. This plant uses the manufactured UF_4 in its magnesium reduction operation as a supplement to UF_4 obtained from other sources. This process is primarily a uranium recovery operation, as the raw materials are scrap from machining operations, and slag generated by magnesium reduction. The magnesium fluoride slag is recycled to the recovery process whenever its residual uranium content is economically recoverable.

The first step in the recovery process is acid leaching the raw materials to dissolve uranium. Nitric acid is used in all digestion, leaching, and dissolving operations. The resultant uranyl nitrate solution is filtered and undissolved solids are discarded.

Solvent extraction follows the dissolution operation. In the solvent extraction process, uranyl nitrate is extracted into a solvent phase from the impure solution with an organic solvent such as tributyl phosphate in kerosene. The solvent extraction raffinate is discharged to treatment.

Following the solvent extraction operation the uranyl nitrate is stripped from the organic phase with deionized water. The aqueous uranyl nitrate solution undergoes evaporation to produce a dry uranyl nitrate product which is calcined causing the nitrate to burn off as gaseous nitrogen oxides. The resulting product is yellow uranium trioxide, UO_3.

The final stages of uranium tetrafluoride production involve two operations; hydrogen reduction and hydrofluorination. Uranium trioxide is reduced by hydrogen to produce uranium dioxide, UO_2. Hydrogen for this process is obtained by cracking ammonia. Then, uranium dioxide is contacted with vaporized hydrofluoric acid at elevated temperatures. The resulting product is uranium tetrafluoride, UF_4, which is feed material for the magnesium reduction operation.

The potential waste streams associated with the production of uranium tetrafluoride are generated in the preliminary acid leaching steps and the solvent extraction and purification operations. Wet air pollution controls are also used in this process to scrub gases from the acid leaching, evaporation and denitration, and hydrofluorination operations.

MAGNESIUM REDUCTION PROCESS

The magnesium reduction process is widely used to produce uranium metal from uranium tetrafluoride. Uranium tetrafluoride is mixed with magnesium and reduced to uranium metal in a thermite-type bomb reduction vessel. The reduction reaction requires about three minutes and reaches a temperature around 1,900°C. After the magnesium fluoride slag and uranium metal are allowed to cool, the uranium metal is mechanically separated from the slag. No process water is associated with this process, therefore no waste streams are generated.

PROCESS WASTEWATER SOURCES

Although a variety of processes are involved in secondary uranium production, the process wastewater sources can be subdivided as follows:

(a) Refinery sump filtrate,
(b) Slag leach reslurry,
(c) Digestion wet air pollution control,
(d) Solvent extraction raffinate filtrate,
(e) Evaporation and denitration wet air pollution control,
(f) Hydrofluorination water scrubber,
(g) Hydrofluorination alkaline scrubber,
(h) Magnesium reduction and casting floor wash, and
(i) Laundry wastewater.

OTHER WASTEWATER SOURCES

Other wastewaters may be associated with the secondary uranium subcategory. These wastewater streams include stormwater runoff, and maintenance and cleanup water. These waste streams are not considered as a part of this rulemak-ing. EPA believes that the flows and pollutant loadings associated with these waste streams are insignificant relative to the waste streams selected and are best handled by the appropriate permit authority on a case-by-case basis under authority of Section 402 of the Clean Water Act.

AGE, PRODUCTION, AND PROCESS PROFILE

Figure III-3 (page 4676) shows the location of the three secondary uranium plants operating in the United States. All three plants are on the eastern part of the country. Table III-1 (page 4671) shows the relative ages of the three plants. This shows that two plants were built in the early years of the uranium industry, while the third plant was built in the early 1970's. It was probably built in anticipation of the growth of the uranium industry due to commercial uses of uranium, primarily in power generation. Table III-2 (page 4672) gives the yearly production ranges for the three plants in this subcategory.

Table III-3 (page 4673) provides a summary of the number of plants generating wastewater for the waste streams associated with various processes and the number of plants with the process.

Table III-1

INITIAL OPERATING YEAR (RANGE) SUMMARY OF PLANTS
IN THE SECONDARY URANIUM SUBCATEGORY BY DISCHARGE TYPE

Type of Plant Discharge	Initial Operating Year (Range) Summary of Plants (Plant Age in Years)					Total
	1983-1974 (0-10)	1973-1969 (11-15)	1968-1959 (16-25)	1958-1954 (26-30)	1953-1949 (31-35)	
Direct	0	1	0	0	1	2
Indirect	0	0	0	0	0	0
Zero	0	0	0	1	0	1
TOTAL	0	1	0	1	1	3

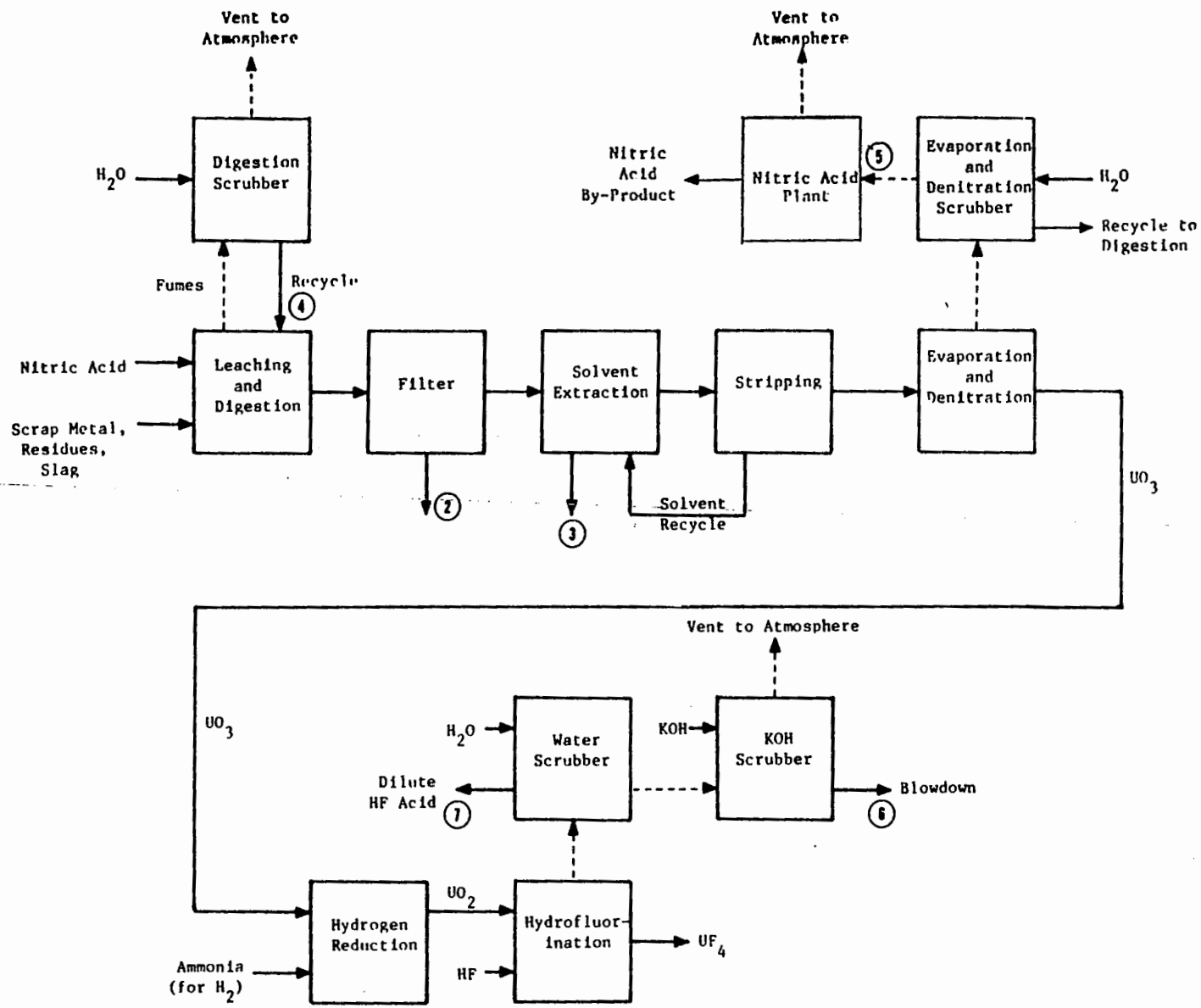

Figure III-1

URANIUM TETRAFLUORIDE PRODUCTION PROCESS
IN THE SECONDARY URANIUM SUBCATEGORY

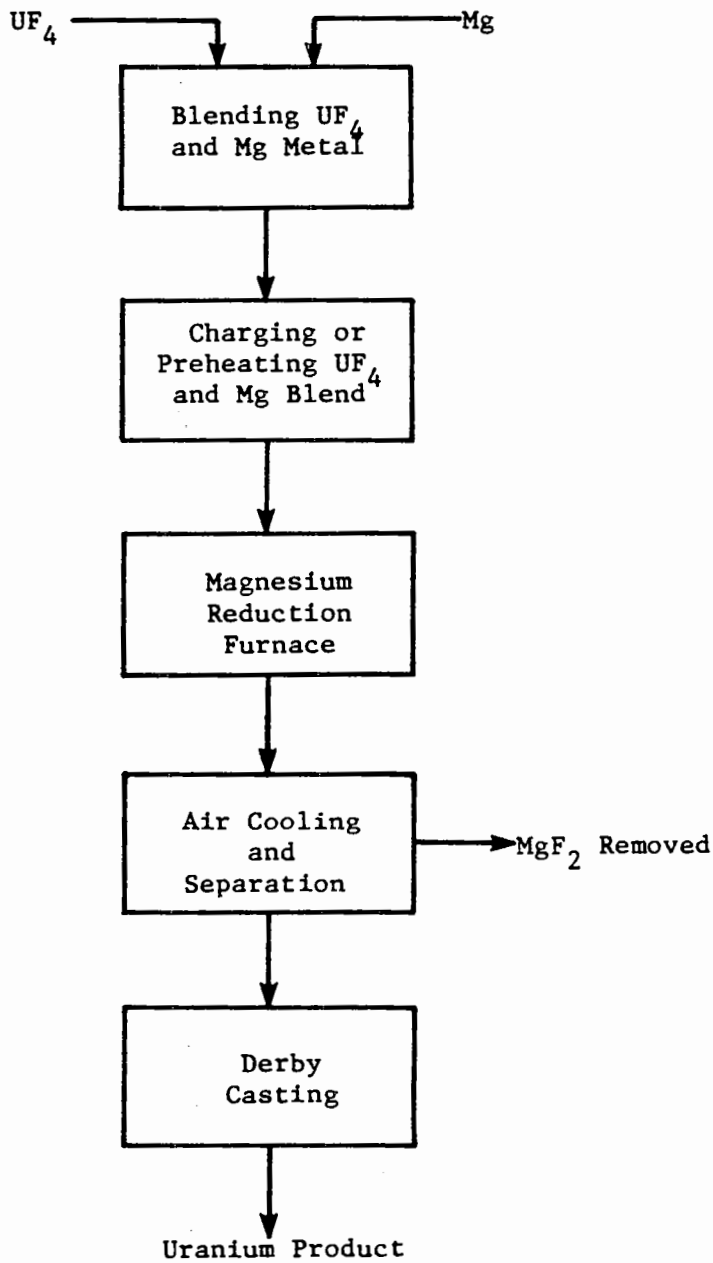

Figure III-2

MAGNESIUM REDUCTION PROCESS IN THE SECONDARY URANIUM SUBCATEGORY

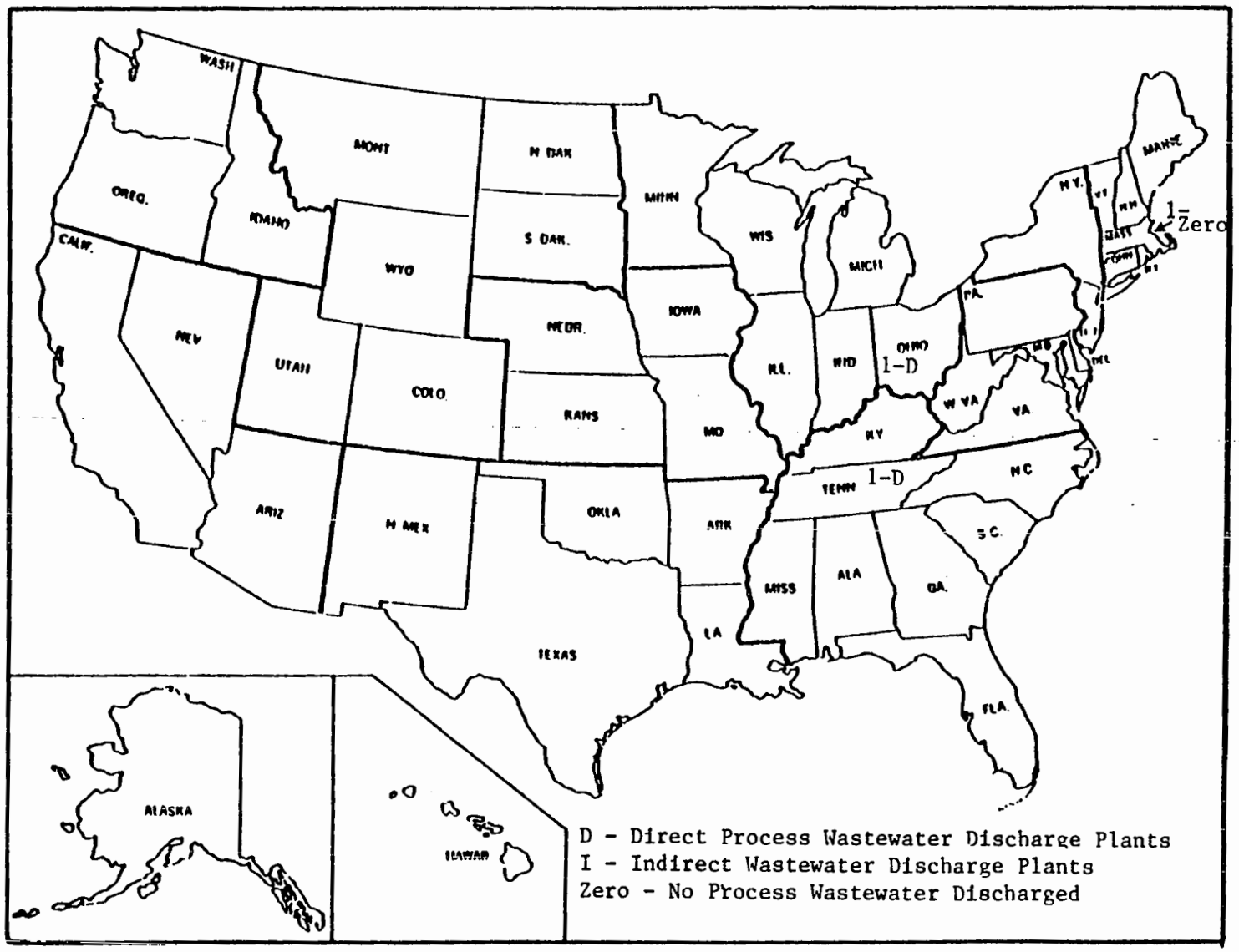

Figure III-3

GEOGRAPHIC LOCATIONS OF THE SECONDARY URANIUM SUBCATEGORY PLANTS

SECTION IV

SUBCATEGORIZATION

This section summarizes the factors considered during the designation of the related subdivisions of the secondary uranium subcategory. Production normalizing parameters for each subdivision are also discussed.

FACTORS CONSIDERED IN SUBDIVIDING THE SECONDARY URANIUM SUBCATEGORY

The factors listed previously under general subcategorization were each evaluated when considering subdivision of the secondary uranium subcategory. In the discussion that follows, the factors will be described as they pertain to this particular subcategory.

The rationale for considering further subdivision of the secondary uranium subcategory is based primarily on differences in the production processes and raw materials used. Within this subcategory a number of different operations are performed which may or may not have a water use or discharge, and which may require the establishment of separate effluent limitations. While secondary uranium is still considered a single subcategory, a more thorough examination of the production processes has illustrated the need for limitations and standards based on specific flow allowances for the following subdivisions:

1. Refinery sump filtrate,
2. Slag leach reslurry,
3. Digestion wet air pollution control,
4. Solvent extraction raffinate filtrate,
5. Evaporation and denitration wet air pollution control,
6. Hydrofluorination water scrubber,
7. Hydrofluorination alkaline scrubber,
8. Magnesium reduction and casting floor wash, and
9. Laundry wastewater.

These subdivisions follow directly from differences within the process of refining scrap, residues, and slag to produce uranium tetrafluoride for use in magnesium reduction to uranium metal.

Leaching of the raw materials gives rise to the first, second, and fourth subdivisions. A major source of wastewater is the filtrate that is generated by leaching uranium from the raw materials. When slag is processed, the residual solids are discharged as a slurry which may be a significant source of pollutants. Wastewater from scrubbers which are used to control acid fumes in the leaching operation is also a source of pollutants.

Solvent extraction is used in the refining process to purify a uranium intermediate product. Solvent extraction results in a raffinate waste stream that contains significant quantities of

pollutants.

Subdivisions five through seven arise from wet air pollution controls which control emissions from the process used to refine scrap, residues, and slag to a usable product. Evaporation, denitration, and hydrofluorination are all operations that necessitate air pollution control systems. In some cases, water use is recycled to the process rather than discharged. The potential sources of wastewater and associated pollutants require that each subdivision be examined and handled on an individual basis. Subdivisions eight and nine result from floor washing in the magnesium reduction and casting area and laundering of plant personnel clothing.

OTHER FACTORS

The other factors considered in this evaluation either support the establishment of the seven subdivisions or were shown to be inappropriate bases for subdivision. Air pollution control methods, treatment costs, and total energy requirements are functions of the selected subcategorization factors -- metal product, raw materials, and production processes. Therefore, they are not independent factors and do not affect the subcategorization which has been applied. As discussed in Section IV of the General Development Document, certain other factors, such as plant age, plant size, and the number of employees, were also evaluated and determined to be inappropriate for use as bases for subdivision of nonferrous metals plants.

PRODUCTION NORMALIZING PARAMETERS

As discussed previously, the effluent limitations and standards developed in this document establish mass limitations on the discharge of specific pollutant parameters. To allow these regulations to be applied to plants with various production capacities, the mass of pollutant discharged must be related to a unit of production. This factor is known as the production normalizing parameter (PNP).

In general, for each production process which has a wastewater associated with it, the actual mass of uranium intermediate product produced will be used as the PNP. Thus, the PNPs for the nine subdivisions are as follows:

Subdivision	PNP
1. Refinery sump filtrate	kkg of uranium processed in the refinery
2. Slag leach reslurry	kkg of uranium processed in the refinery
3. Digestion wet air pollution control	kkg of uranium processed in the refinery

4.	Solvent extraction raffinate filtrate	kkg of uranium processed in the refinery
5.	Evaporation and denitration wet air pollution control	kkg of uranium trioxide produced
6.	Hydrofluorination water scrubber	kkg of uranium tetrafluoride produced
7.	Hydrofluorination alkaline scrubber	kkg of uranium tetrafluoride produced
8.	Magnesium reduction and casting floor wash	kkg of uranium produced by magnesium reduction
9.	Laundry wastewater	kkg of uranium produced by magnesium reduction

The last two subdivisions were added after proposal to account for additional waste streams documented by the plants in their comments. For proposal, the Agency had insufficient data to quantify the flow associated with these operations. Data obtained during post proposal sampling visits have enabled the Agency to promulgate discharge allowances for these building blocks.

Based on comments from the industry received between proposal and promulgation, the Agency revised the production normalizing parameters for the first four subdivisions. The PNPs were changed from the mass of uranium trioxide produced to the mass of uranium processed within the subdivision operation. This enables plants to calculate their regulatory discharge allowances when they perform operations on a batch or campaign basis.

Several subdivision names have also been altered since proposal. This was done in response to industry comments requesting that subdivision names be modified to reflect actual practice within the industry.

THIS PAGE INTENTIONALLY LEFT BLANK

SECTION V

WATER USE AND WASTEWATER CHARACTERISTICS

This section describes the characteristics of the wastewaters associated with the secondary uranium subcategory. Water use and discharge rates are explained and then summarized. Data used to characterize the wastewaters are presented, and the specific source, water use and discharge flows, and wastewater characteristics for each separate wastewater source are discussed.

Section V of the General Development Document contains a detailed description of the data sources and methods of analysis used to characterize wastewater from the nonferrous metals manufacturing category. To summarize this information briefly, two principal data sources were used: data collection portfolios (dcp) and field sampling results. Data collection portfolios contain information regarding wastewater flows and production levels.

In order to quantify the pollutant discharge from secondary uranium plants, a field sampling program was conducted after proposal. A complete list of the pollutants considered and a summary of the techniques used in sampling and laboratory analyses are included in Section V of Vol. I. Wastewater samples were analyzed for 124 of the 126 priority pollutants and other pollutants deemed appropriate. Because the analytical standard for TCDD was judged to be too hazardous to be made generally available, samples were never analyzed for this pollutant. Samples were also never analyzed for asbestos. There is no reason to expect that TCDD or asbestos would be present in nonferrous metals manufacturing wastewater. Two plants were selected for sampling in the subcategory. In general, the samples were analyzed for three classes of pollutants: toxic organic pollutants, toxic metal pollutants, and criteria pollutants (which includes both conventional and nonconventional pollutants).

Additional wastewater flow and production data were received through industry comments and sampling activities between proposal and promulgation. This aided EPA in promulgating discharge allowances for magnesium reduction and casting floor wash and laundry wastewater which had not previously been proposed. It also aided EPA in revising the production normalized flows for several subdivisions.

As described in Section IV of this supplement, the secondary uranium subcategory has been split into nine subdivisions or wastewater sources, so that the proposed regulation contains mass discharge limitations and standards for nine unit processes discharging process wastewater. Differences in the wastewater characteristics associated with these subdivisions are to be expected. For this reason, wastewater streams corresponding to each subdivision are addressed separately in the discussions that

follow. These wastewater sources are:

1. Refinery sump filtrate,
2. Slag leach reslurry,
3. Digestion wet air pollution control,
4. Solvent extraction raffinate filtrate,
5. Evaporation and denitration wet air pollution control,
6. Hydrofluorination water scrubber,
7. Hydrofluorination alkaline scrubber,
8. Magnesium reduction and casting floor wash, and
9. Laundry wastewater.

WASTEWATER FLOW RATES

Data supplied by dcp responses were evaluated, and two flow-to-production ratios, water use and wastewater discharge flow, were calculated for each stream. The two ratios are differentiated by the flow value used in calculation. Water use is defined as the volume of water or other fluid required for a given process per mass of uranium product and is therefore based on the sum of recycle and make-up flows to a given process. Wastewater flow discharged after pretreatment or recycle (if these are present) is used in calculating the production normalized flow -- the volume of wastewater discharged from a given process to further treatment, disposal, or discharge per mass of uranium produced. Differences between the water use and wastewater flows associated with a given stream result from recycle, evaporation, and carry-over on the product. The production values used in calculation correspond to the production normalizing parameter, PNP, assigned to each stream, as outlined in Section IV. As an example, refinery sump filtrate wastewater flow is related to the mass of uranium processed in the refinery. As such, the discharge rate liters of refinery sump filtrate per metric ton of uranium processed in the refinery (gallons of refinery sump filtrate per ton of uranium processed in the refinery).

The production normalized discharge flows were compiled and statistically analyzed by stream type. These production normalized water use and discharge flows are presented by subdivision in Tables V-1 through V-9 at the end of this section. Where appropriate, an attempt was made to identify factors that could account for variations in water use and discharge rates. These variations are discussed later in this section by subdivision. A similar analysis of factors affecting the wastewater flows is presented in Sections X, XI, and XII where representative BAT, NSPS, and pretreatment flows are selected for use in calculating the effluent limitations.

The water use and discharge rates shown do not include nonprocess wastewater, such as rainfall runoff and noncontact cooling water.

WASTEWATER CHARACTERISTICS DATA

Data used to characterize the various wastewaters associated with secondary uranium production come from two sources -- data

collection portfolios and analytical data from sampling.

DATA COLLECTION PORTFOLIOS

In the data collection portfolios, the secondary uranium plants were asked to specify the presence or absence of toxic pollutants in their wastewater. The one plant responding to this questionnaire did not report the presence of any toxic organic pollutants. The responses for the toxic metals and cyanide are summarized below:

Pollutant	Known Present	Believed Present (Based on Raw Materials and Process Chemicals Used)
Antimony	0	0
Arsenic	0	0
Beryllium	0	0
Cadmium	0	0
Chromium	1	0
Copper	1	0
Cyanide	0	0
Lead	0	0
Mercury	0	0
Nickel	1	0
Selenium	0	0
Silver	0	0
Thallium	0	0
Zinc	0	0

FIELD SAMPLING DATA

In order to quantify the concentrations of pollutants in wastewater from secondary uranium plants, wastewater samples were collected at two of the plants belonging to this subcategory. Diagrams indicating the sampling sites, waste streams and production processes are shown in Figures V-1 and V-2 (pages 4726 and 4727).

Tables V-10 through V-16 summarize the data for 124 priority pollutants as well as other pollutants that were considered appropriate to this subcategory.

Table V-10 (page 4691) presents the data for refinery sump filtrate. Tables V-11 and V-12 (pages 4694 and 4702) summarize the data for solvent extraction raffinate after lime addition and sedimentation (V-11), and after additional treatment consisting of pH adjustment and filtration (V-12). Tables V-13 (page 4706), V-14 (page 4709), and V-15 (page 4719) show the data for hydrofluorination alkaline scrubber wastewater, reduction and casting floor wash, and laundry wastewater, respectively. Finally, Table V-16 (page 4723) presents data for treated wastewater from reduction and casting as well as machining operations. Note that the stream numbers listed in the tables correspond to those given in the plant sampling site diagrams,

Figures V-1 and V-2 (pages 4727 and 4727). Where no data are listed for a specific day of sampling, the wastewater samples for the stream were not collected.

The data tables include some samples measured at concentrations considered not quantifiable. Metal values reported as less than a certain value were considered not quantifiable.

The detection limits shown on the data tables for metals and conventional and nonconventional pollutants are not the same in all cases as the published detection limits for these pollutants by the same analytical methods. The detection limits used were reported with the analytical data and hence are the appropriate as a result of a number of laboratory-specific, equipment-specific, and daily operator-specific factors. These factors can include day-to-day differences in machine calibration, variation in stock solutions, and variation in operators.

The statistical analysis of data includes some samples measured at concentrations considered not quantifiable. For data considered as detected but below quantifiable concentrations, a value of zero is used for averaging. Nonconventional and conventional pollutant data reported with a "less than" sign are considered as detected, but not further quantifiable. A value of zero is used for averaging. Metal values reported as less than a certain value were considered as below quantification, and consequently were assigned a value of zero in the calculation of the average.

WASTEWATER CHARACTERISTICS AND FLOWS BY SUBDIVISION

Since secondary uranium production involves nine principal sources of wastewater and each has potentially different characteristics and flows, the wastewater characteristics and discharge rates corresponding to each subdivision will be described separately. A brief description of why the associated production processes generate a wastewater will also be discussed.

REFINERY SUMP FILTRATE

The source of this waste stream is in the refinery digestion operation. Here the uranium scrap, residues, and compounds are acid leached, dissolving the uranium into solution. The primary sources of wastewater in the digestion and dissolving operations are pump leakage, pump seal water, spills, and hosedown water. The latter is required for health and safety reasons. The production normalized water use and discharge rates for refinery sump filtrate are given in Table V-1 (page 4688) in liters per metric ton of uranium processed in the refinery.

The sampling data for refinery sump filtrate are presented in Table V-10 (page 4691). The data show that this wastewater is characterized by treatable concentrations of chromium, magnesium, and suspended solids.

SLAG LEACH RESLURRY

This waste stream originates in the refinery digestion operation. Magnesium fluoride slag containing residual levels of uranium is acid leached to recover the uranium values. After leaching, the undissolved solids are filtered and discharged to treatment as a slurry. The production normalized water use and discharge rates for slag leach reslurry are given in Table V-2 (page 4688) in liters per metric ton of uranium processed in the refinery.

Although no sampling data are available for this wastewater, it is assumed to be similar to the refinery sump filtrate with treatable concentrations of magnesium and suspended solids.

DIGESTION WET AIR POLLUTION CONTROL

The acid leach operation, at the start of the uranium scrap, residue, and slag refining process, includes a water scrubbing system to control the discharge of acidic fumes and particulate matter. The scrubber liquor is recycled within the scrubber system, but a blowdown stream prevents build-up of acid and particulates. The blowdown stream is reused in the acid digestion and dissolution operation. Table V-4 (page 4689) shows the production normalized water use and discharge rates for digestion wet air pollution control.

Because the scrubber liquor is entirely recycled and reused, no discharge of wastewater results from the use of digestion wet air pollution control.

SOLVENT EXTRACTION RAFFINATE FILTRATE

Solvent extraction follows the acid leaching operation and is used to purify the uranium compound in solution. An organic solvent, tributyl phosphate in a kerosene carrier, selectively extracts the uranium compound from an acid solution. The solvent extraction raffinate filtrate is discharged to treatment. Table V-3 (page 4688) presents the production normalized water use and discharge rates for the solvent extraction raffinate filtrate in liters per metric ton of uranium processed in solvent extraction.

Although the Agency was not able to obtain samples of this wastewater prior to treatment, the data in Table V-11 (page 4694) for solvent extraction raffinate after lime addition and sedimentation show that this wastewater contains concentrations of several priority metals far in excess of their treatable concentrations. These metals include antimony, chromium, copper, lead, selenium, and zinc. Treatable concentrations of magnesium, uranium, and suspended solids are also present.

EVAPORATION AND DENITRATION WET AIR POLLUTION CONTROL

A water scrubber is used to control vapors and fumes from the evaporation and denitration operations. Evaporation is used to

concentrate the uranium solution (uranyl nitrate) after it has been stripped from the organic phase into an aqueous phase. After evaporation, the concentrated intermediate uranium product is calcined to drive off the nitrate bound to the uranium and to produce dry uranium trioxide. The nitrates in the air react to form nitric acid, and the scrubber is used to control these acid fumes. Table V-5 (page 4689) shows the production normalized water use and discharge rates for the evaporation and denitration fume scrubber.

Because the scrubber liquor has a high acid content, it is recycled for use in the digestion operation. There it is used to dilute fresh acid used for leaching and dissolution. Since the scrubber liquor is entirely reused, no discharge of wastewater is practiced in the evaporation and denitration operations.

HYDROFLUORINATION WATER SCRUBBER

The hydrofluorination unit produces uranium tetrafluoride by contacting uranium dioxide with vaporized hydrofluoric acid at elevated temperatures. The off-gases from this operation contain significant quantities of unreacted hydrofluoric acid. The scrubber on this unit scrubs the acid fumes from the operation by absorbing the hydrofluoric acid into water. Scrubbed gases are vented to the alkaline scrubber. Table V-7 (page 4690) shows the production normalized water use and discharge rates in liters per metric ton of uranium tetrafluoride produced.

Since the hydrofluorination scrubber cleans what is predominantly vaporized unreacted hydrofluoric acid, the scrubber liquor concentrates this acid as it is recycled through the system. When the desired concentration of hydrofluoric acid is attained, the liquor is drawn off and sold for industrial use. For this reason, no discharge of wastewater occurs from the hydrofluorination water scrubber.

HYDROFLUORINATION ALKALINE SCRUBBER

This scrubber handles vent gases from the hydrofluorination water scrubber. These gases originated in the hydrofluorination operation where uranium dioxide is converted to uranium tetrafluoride. Hydrofluoric acid fumes that were not absorbed by the water scrubber are cleaned and neutralized by the KOH scrubber prior to venting the exhaust gases to the atmosphere. Scrubber blowdown is discharged to treatment. Production normalized water use and discharge rates are presented in Table V-6 (page 4689) in liters per metric ton of uranium tetrafluoride produced.

The sampling data for hydrofluorination alkaline scrubber wastewater are presented in Table V-13 (page 4706). These data show that this wastewater is characterized by an alkaline pH and treatable concentrations of arsenic, copper, and nickel.

MAGNESIUM REDUCTION AND CASTING FLOOR WASH WATER

Water is used to wash floors and equipment in the magnesium reduction and casting area. This water is eventually discharged as a wastewater stream. Table V-8 (page 4690) presents the production normalized water use and discharge rates for magnesium reduction and casting floor wash water in liters per metric ton of uranium produced by magnesium reduction.

The analytical data for this waste stream are presented in Table V-14 (page 4709). The data show that this wastewater is characterized by treatable concentrations of copper, lead, zinc, magnesium, uranium, and suspended solids.

LAUNDRY WASTEWATER

Water is used to wash the clothing of plant personnel working in process areas. This practice helps to minimize the amount of uranium which leaves the plant site on workers and their clothes. This water is eventually discharged as a wastewater stream. Water use and discharge rates for laundry wastewater are presented in Table V-9 (page 4790) in liters per metric ton of uranium produced by magnesium reduction.

The analytical data for this waste stream are presented in Table V-15 (page 4719).

Table V-1

WATER USE AND DISCHARGE RATES FOR
REFINERY SUMP FILTRATE

(l/kkg of uranium processed in the refinery)

Plant Code	Percent Recycle	Production Normalized Water Use	Production Normalized Discharge Flow
1175	0	73,340	73,340

TABLE V-2

WATER USE AND DISCHARGE RATES FOR
SLAG LEACH RESLURRY

(l/kkg of uranium processed in the refinery)

Plant Code	Percent Recycle	Production Normalized Water Use	Production Normalized Discharge Flow
1175	0	4,566	4,566

TABLE V-3

WATER USE AND DISCHARGE RATES FOR
DIGESTION WET AIR POLLUTION CONTROL

(l/kkg of uranium processed in the refinery)

Plant Code	Percent Recycle	Production Normalized Water Use	Production Normalized Discharge Flow
1175	100	NR	0

TABLE V-4

WATER USE AND DISCHARGE RATES FOR
SOLVENT EXTRACTION RAFFINATE FILTRATE

(l/kkg of uranium processed in the refinery)

Plant Code	Percent Recycle	Production Normalized Water Use	Production Normalized Discharge Flow
1175	0	6,369	6,369

TABLE V-5

WATER USE AND DISCHARGE RATES FOR
EVAPORATION AND DENITRATION WET AIR POLLUTION CONTROL

(l/kkg of uranium trioxide produced)

Plant Code	Percent Recycle	Production Normalized Water Use	Production Normalized Discharge Flow
1175	100	NR	0

TABLE V-6

WATER USE AND DISCHARGE RATES FOR
HYDROFLUORINATION WATER SCRUBBER

(l/kkg of uranium tetrafluoride produced)

Plant Code	Percent Recycle	Production Normalized Water Use	Production Normalized Discharge Flow
1175	100	NR	0

TABLE V-7

WATER USE AND DISCHARGE RATES FOR
HYDROFLUORINATION ALKALINE SCRUBBER

(l/kkg of uranium tetrafluoride produced)

Plant Code	Percent Recycle	Production Normalized Water Use	Production Normalized Discharge Flow
1175	NR	NR	20

TABLE V-8

WATER USE AND DISCHARGE RATES FOR
MAGNESIUM REDUCTION AND CASTING FLOOR WASH WATER

(l/kkg of uranium produced by magnesium reduction)

Plant Code	Percent Recycle	Production Normalized Water Use	Production Normalized Discharge Flow
1175	0	331	331
1066	0	30.1	30.1

TABLE V-9

WATER USE AND DISCHARGE RATES FOR
LAUNDRY WASTEWATER

(l/kkg of uranium produced by magnesium reduction)

Plant Code	Percent Recycle	Production Normalized Water Use	Production Normalized Discharge Flow
1175	NR	NR	NR
1066	0	192	192

Table V-10

REFINERY SUMP FILTRATE
SAMPLING DATA

Pollutant	Stream Code	Sample Type*	Concentrations (mg/l) Source	Day 1	Day 2	Day 3
Toxic Pollutants						
114. antimony	124	1	<0.02	0.08	0.11	0.033
115. arsenic	124	1	<0.002	<0.002	<0.002	<0.002
117. beryllium	124	1	<0.001	<0.001	<0.001	0.001
118. cadmium	124	1	<0.002	<0.002	<0.002	<0.002
119. chromium (total)	124	1	<0.005	0.034	0.067	0.072
120. copper	124	1	<0.001	0.027	0.028	0.027
121. cyanide (total)	124	1	<0.01	0.18	0.01	0.01
122. lead	124	1	<0.002	<0.002	<0.002	<0.002
123. mercury	124	1	0.0003	0.0003	0.0002	0.0002
124. nickel	124	1	<0.003	<0.003	<0.003	<0.003
125. selenium	124	1	<0.08	<0.08	0.10	<0.08
126. silver	124	1	<0.002	<0.002	<0.002	<0.002
127. thallium	124	1	<0.09	<0.09	<0.09	<0.09
128. zinc	124	1	<0.003	0.006	0.017	0.019

Table V-10 (Continued)

REFINERY SUMP FILTRATE
SAMPLING DATA

Pollutant	Stream Code	Sample Type*	Concentrations (mg/l) Source	Day 1	Day 2	Day 3
Nonconventional Pollutants						
Acidity	124	1	114	23	<10	<10
Alkalinity	124	1	17	18	35	19
Ammonia Nitrogen	124	1	0.03	0.51	1.0	0.97
Chloride	124	1	13	22	34	28
Fluoride	124	1	0.3	7.7	6.2	2.3
Iron	124	1	0.37	0.079	0.044	0.12
Magnesium	124	1	9.6	560	1,700	1,700
Manganese	124	1	0.002	0.002	0.007	0.006
Nitrate	124	1	0.11	1,600	4,300	4,900
Sulfate	124	1	74	78	78	<11
Total Dissolved Solids (TDS)	124	1	160	2,900	13,000	12,000
Total Organic Carbon (TOC)	124	1	<1	6	12	23
Total Solids (TS)	124	1	200	2,900	15,000	12,000
Uranium	124	1	0.013	0.026	0.036	0.028

Table V-10 (Continued)

REFINERY SUMP FILTRATE
SAMPLING DATA

Pollutant	Stream Code	Sample Type*	Concentrations (mg/l) Source	Day 1	Day 2	Day 3
Conventional Pollutants						
Oil and Grease	124	1	14	290	140	41
Total Suspended Solids (TSS)	124	1	<1	16	35	45
pH	124	1	9.3	8.4	9.7	9.6

*Sample Type Code:
1 - One-time grab
2 - Manual composite during intermittent process operation
3 - 8-hour manual composite
4 - 8-hour automatic composite
5 - 24-hour manual composite
6 - 24-hour automatic composite

Table V-11

SOLVENT EXTRACTION RAFFINATE AFTER LIME ADDITION AND SEDIMENTATION
SAMPLING DATA

Pollutant	Stream Code	Sample Type*	Concentrations (mg/l) Source	Day 1	Day 2	Day 3
Toxic Pollutants						
1. acenaphthene	135	1	ND	ND		
2. acrolein	135	1	ND	ND		
3. acrylonitrile	135	1	ND	ND		
4. benzene	135	1	ND	ND		
5. benzidine	135	1	ND	ND		
6. carbon tetrachloride	135	1	ND	ND		
7. chlorobenzene	135	1	ND	ND		
8. 1,2,4-trichlorobenzene	135	1	ND	ND		
9. hexachlorobenzene	135	1	ND	ND		
10. 1,2-dichloroethane	135	1	ND	ND		
11. 1,1,1-trichloroethane	135	1	ND	ND		
12. hexachloroethane	135	1	ND	ND		
13. 1,1-dichloroethane	135	1	ND	ND		
14. 1,1,2-trichloroethane	135	1	ND	ND		

Table V-11 (Continued)

SOLVENT EXTRACTION RAFFINATE AFTER LIME ADDITION AND SEDIMENTATION
SAMPLING DATA

Pollutant	Stream Code	Sample Type*	Concentrations (mg/l) Source	Day 1	Day 2	Day 3
Toxic Pollutants (Cont.)						
15. 1,1,2,2-tetrachloroethane	135	1	ND	ND		
16. chloroethane	135	1	ND	ND		
17. bis(chloromethyl)ether	135	1	ND	ND		
18. bis(2-chloroethyl)ether	135	1	ND	ND		
19. 2-chloroethyl vinyl ether	135	1	ND	ND		
20. 2-chloronaphthalene	135	1	ND	ND		
21. 2,4,6-trichlorophenol	135	1	ND	ND		
22. p-chloro-m-cresol	135	1	ND	ND		
23. chloroform	135	1	ND	ND		
24. 2-chlorophenol	135	1	ND	ND		
25. 1,2-dichlorobenzene	135	1	ND	ND		
26. 1,3-dichlorobenzene	135	1	ND	ND		
27. 1,4-dichlorobenzene	135	1	ND	ND		
28. 3,3'-dichlorobenzidine	135	1	ND	ND		

Table V-11 (Continued)

SOLVENT EXTRACTION RAFFINATE AFTER LIME ADDITION AND SEDIMENTATION
SAMPLING DATA

Pollutant	Stream Code	Sample Type*	Concentrations (mg/l) Source	Day 1	Day 2	Day 3
Toxic Pollutants (Cont.)						
29. 1,1-dichloroethylene	135	1	ND	ND		
30. 1,2-trans-dichloroethylene	135	1	ND	ND		
31. 2,4-dichlorophenol	135	1	ND	ND		
32. 1,2-dichloropropane	135	1	ND	ND		
33. 1,3-dichloropropene	135	1	ND	ND		
34. 2,4-dimethylphenol	135	1	ND	ND		
35. 2,4-dinitrotoluene	135	1	ND	ND		
36. 2,6-dinitrotoluene	135	1	ND	ND		
37. 1,2-diphenylhydrazine	135	1	ND	ND		
38. ethylbenzene	135	1	ND	ND		
39. fluoranthene	135	1	ND	ND		
40. 4-chlorophenyl phenyl ether	135	1	ND	ND		
41. 4-bromophenyl phenyl ether	135	1	ND	ND		
42. bis(2-chloroisopropyl)ether	135	1	ND	ND		

Table V-11 (Continued)

SOLVENT EXTRACTION RAFFINATE AFTER LIME ADDITION AND SEDIMENTATION
SAMPLING DATA

Pollutant	Stream Code	Sample Type*	Concentrations (mg/l) Source	Day 1	Day 2	Day 3
Toxic Pollutants (Cont.)						
43. bis(2-chloroethoxy)methane	135	1	ND	ND		
44. methylene chloride	135	1	ND	ND		
45. methyl chloride (chloromethane)	135	1	ND	ND		
46. methyl bromide (bromomethane)	135	1	ND	ND		
47. bromoform (tribromomethane)	135	1	ND	ND		
48. dichlorobromomethane	135	1	ND	ND		
49. trichlorofluoromethane	135	1	ND	ND		
50. dichlorodifluoromethane	135	1	ND	ND		
51. chlorodibromomethane	135	1	ND	ND		
52. hexachlorobutadiene	135	1	ND	ND		
53. hexachlorocyclopentadiene	135	1	ND	ND		
54. isophorone	135	1	ND	ND		
55. naphthalene	135	1	ND	ND		
56. nitrobenzene	135	1	ND	ND		

Table V-11 (Continued)

SOLVENT EXTRACTION RAFFINATE AFTER LIME ADDITION AND SEDIMENTATION
SAMPLING DATA

Pollutant	Stream Code	Sample Type*	Concentrations (mg/l) Source	Day 1	Day 2	Day 3
Toxic Pollutants (Cont.)						
57. 2-nitrophenol	135	1	ND	ND		
58. 4-nitrophenol	135	1	ND	ND		
59. 2,4-dinitrophenol	135	1	ND	ND		
60. 4,6-dinitro-o-cresol	135	1	ND	ND		
61. N-nitrosodimethylamine	135	1	ND	ND		
62. N-nitrosodiphenylamine	135	1	ND	ND		
63. N-nitrosodi-n-propylamine	135	1	ND	ND		
64. pentachlorophenol	135	1	ND	ND		
65. phenol	135	1	ND	ND		
66. bis(2-ethylhexyl)phthalate	135	1	ND	ND		
67. butyl benzyl phthalate	135	1	ND	ND		
68. di-n-butyl phthalate	135	1	ND	ND		
69. di-n-octyl phthalate	135	1	ND	ND		
70. diethyl phthalate	135	1	ND	ND		

Table V-11 (Continued)

SOLVENT EXTRACTION RAFFINATE AFTER LIME ADDITION AND SEDIMENTATION
SAMPLING DATA

Pollutant	Stream Code	Sample Type*	Concentrations (mg/l) Source	Day 1	Day 2	Day 3
Toxic Pollutants (Cont.)						
71. dimethyl phthalate	135	1	ND	ND		
72. benzo(a)anthracene	135	1	ND	ND		
73. benzo(a)pyrene	135	1	ND	ND		
74. benzo(b)fluoranthene	135	1	ND	ND		
75. benzo(k)fluoranthene	135	1	ND	ND		
76. chrysene	135	1	ND	ND		
77. acenaphthylene	135	1	ND	ND		
78. anthracene	135	1	ND	ND		
79. benzo(ghi)perylene	135	1	ND	ND		
80. fluorene	135	1	ND	ND		
81. phenanthrene	135	1	ND	ND		
82. dibenzo(a,h)anthracene	135	1	ND	ND		
83. indeno(1,2,3-c,d)pyrene	135	1	ND	ND		
84. pyrene	135	1	ND	ND		

Table V-11 (Continued)

SOLVENT EXTRACTION RAFFINATE AFTER LIME ADDITION AND SEDIMENTATION
SAMPLING DATA

Pollutant	Stream Code	Sample Type*	Concentrations (mg/l) Source	Day 1	Day 2	Day 3
Toxic Pollutants (Cont.)						
85. tetrachloroethylene	135	1	ND	ND		
86. toluene	135	1	ND	ND		
87. trichloroethylene	135	1	ND	ND		
88. vinyl chloride (chloroethylene)	135	1	ND	ND		
114. antimony	135	1	<0.02	10		
115. arsenic	135	1	<0.002	<0.02		
117. beryllium	135	1	<0.001	0.17		
118. cadmium	135	1	<0.002	1.2		
119. chromium (total)	135	1	<0.005	25		
120. copper	135	1	<0.001	4,160		
122. lead	135	1	<0.002	14		
123. mercury	135	1	0.0003	0.011		
124. nickel	135	1	<0.002	49		
125. selenium	135	1	<0.08	13		

Table V-11 (Continued)

SOLVENT EXTRACTION RAFFINATE AFTER LIME ADDITION AND SEDIMENTATION
SAMPLING DATA

Pollutant	Stream Code	Sample Type*	Concentrations (mg/l) Source	Day 1	Day 2	Day 3
Toxic Pollutants (Cont.)						
126. silver	135	1	<0.002	1.7		
127. thallium	135	1	<0.09	3		
128. zinc	135	1	<0.003	42		
Nonconventional Pollutants						
Iron	135	1	0.37	920		
Magnesium	135	1	9.6	18,000		
Manganese	135	1	0.002	55		
Uranium	135	1	0.013	20.0		
Conventional Pollutant						
pH	135	1	9.3	8.3		

*Sample Type Code:
1 - One-time grab
2 - Manual composite during intermittent process operation
3 - 8-hour manual composite
4 - 8-hour automatic composite
5 - 24-hour manual composite
6 - 24-hour automatic composite

Table V-12

SOLVENT EXTRACTION RAFFINATE FILTRATE
SAMPLING DATA

Pollutant	Stream Code	Sample Type*	Concentrations (mg/l) Source	Day 1	Day 2	Day 3
Toxic Pollutants						
114. antimony	123	1	<0.02	0.02	1.5 1.5	2.3
115. arsenic	123	1	<0.002	<0.002	<0.002 <0.002	0.008
117. beryllium	123	1	<0.001	<0.001	<0.001 <0.001	<0.001
118. cadmium	123	1	<0.002	0.020	0.008 0.010	<0.002
119. chromium (total)	123	1	<0.005	<0.005	0.083 0.087	0.086
120. copper	123	1	<0.001	0.18	0.096 0.10	1.8
121. cyanide (total)	123	1	<0.01	<0.01	<0.01 <0.01	<0.01
122. lead	123	1	<0.002	0.058	2.2 2.3	2.3
123. mercury	123	1	0.0003	0.0009	0.0003 0.0002	0.0003
124. nickel	123	1	<0.003	0.009	0.026 0.027	<0.003

Table V-12 (Continued)

SOLVENT EXTRACTION RAFFINATE FILTRATE
SAMPLING DATA

Pollutant	Stream Code	Sample Type*	Concentrations (mg/l) Source	Day 1	Day 2	Day 3
Toxic Pollutants (Continued)						
125. selenium	123	1	<0.08	<0.08	0.36 0.38	<0.08
126. silver	123	1	<0.002	<0.002	0.069 0.073	0.008
127. thallium	123	1	<0.09	<0.09	0.09 0.12	<0.09
128. zinc	123	1	<0.003	0.011	0.017 0.017	0.091
Nonconventional Pollutants						
Acidity	123	1	114	340	<10 <10	<10
Alkalinity	123	1	17	<1	770 770	7,800
Ammonium Nitrogen	123	1	0.03	0.08	0.46 0.36	0.19
Chloride	123	1	13	14	320 300	210
Fluoride	123	1	0.3	1.2	7.8 8.1	31

Table V-12 (Continued)

SOLVENT EXTRACTION RAFFINATE FILTRATE
SAMPLING DATA

Pollutant	Stream Code	Sample Type*	Concentrations (mg/l) Source	Day 1	Day 2	Day 3
Nonconventional Pollutants (Continued)						
Iron	123	1	0.37	0.19	0.12 0.11	0.057
Magnesium	123	1	9.6	12	1.9 2.0	0.38
Manganese	123	1	0.002	<0.001	0.008 0.009	<0.001
Nitrate	123	1	0.11	46	46,000 7,300	8,100
Sulfate	123	1	74	310	240 230	4
Total Dissolved Solids (TDS)	123	1	160	800	110,000 110,000	1,900
Total Organic Carbon (TOC)	123	1	<1	1	23 21	6
Total Solids (TS)	123	1	200	940	120,000 120,000	2,400
Uranium	123	1	0.013	0.014	0.017 0.018	0.020

Table V-12 (Continued)

SOLVENT EXTRACTION RAFFINATE FILTRATE
SAMPLING DATA

Pollutant	Stream Code	Sample Type*	Concentrations (mg/l) Source	Day 1	Day 2	Day 3
Conventional Pollutants						
Oil and Grease	123	1	14	9	10 2	3
Total Suspended Solids (TSS)	123	1	<1	<1	870 1,100	45
pH	123	1	9.3	9.4	11.5 11.5	13.1

*Sample Type Code:
1 - One-time grab
2 - Manual composite during intermittent process operation
3 - 8-hour manual composite
4 - 8-hour automatic composite
5 - 24-hour manual composite
6 - 24-hour automatic composite

Table V-13

HYDROFLUORINATION ALKALINE (KOH) SCRUBBER
RAW WASTEWATER SAMPLING DATA

Pollutant	Stream Code	Sample Type*	Concentrations (mg/l) Source	Day 1	Day 2	Day 3
Toxic Pollutants						
114. antimony	121	1	<0.02	0.35	0.39	
115. arsenic	121	1	<0.002	12	14	
117. beryllium	121	1	<0.001	0.003	0.003	
118. cadmium	121	1	<0.002	0.073	0.055	
119. chromium (total)	121	1	<0.005	0.063	0.075	
120. copper	121	1	<0.001	2.0	3.6	
121. cyanide (total)	121	1	<0.01	<0.01	0.01	
122. lead	121	1	<0.002	0.011	0.003	
123. mercury	121	1	0.0003	0.0014	0.0020	
124. nickel	121	1	<0.003	3.6	1.9	
125. selenium	121	1	<0.08	0.46	0.54	
126. silver	121	1	<0.002	0.10	0.12	
127. thallium	121	1	<0.09	0.14	0.18	
128. zinc	121	1	<0.003	0.31	0.30	

Table V-13 (Continued)

HYDROFLUORINATION ALKALINE (KOH) SCRUBBER
RAW WASTEWATER SAMPLING DATA

Pollutant	Stream Code	Sample Type*	Concentrations (mg/l) Source	Day 1	Day 2	Day 3
Nonconventional Pollutants						
Acidity	121	1	114			
Alkalinity	121	1	17			
Ammonia Nitrogen	121	1	0.03	3.8		
Chloride	121	1	13	21	18	
Fluoride	121	1	0.3	19,000	32,000	
Iron	121	1	0.37	0.12	0.079	
Magnesium	121	1	9.6	0.65	0.78	
Manganese	121	1	0.002	0.066	0.054	
Nitrate	121	1	0.11	0.03	0.05	
Sulfate	121	1	74			
Total Dissolved Solids (TDS)	121	1	160			
Total Organic Carbon (TOC)	121	1	<1	4,000		
Total Solids (TS)	121	1	200			
Uranium	121	1	0.013	0.015	0.014	

Table V-13 (Continued)

HYDROFLUORINATION ALKALINE (KOH) SCRUBBER
RAW WASTEWATER SAMPLING DATA

Pollutant	Stream Code	Sample Type*	Concentrations (mg/l) Source	Day 1	Day 2	Day 3
Conventional Pollutants						
Oil and Grease	121	1	14	7,300	6,600	
Total Suspended Solids (TSS)	121	1	<1			
pH	121	1	9.3	14.8	15.3	

*Sample Type Code:
1 - One-time grab
2 - Manual composite during intermittent process operation
3 - 8-hour manual composite
4 - 8-hour automatic composite
5 - 24-hour manual composite
6 - 24-hour automatic composite

Table V-14

REDUCTION AND CASTING FLOOR WASH
RAW WASTEWATER SAMPLING DATA

Pollutant	Stream Code	Sample Type*	Concentrations (mg/l) Source	Day 1	Day 2	Day 3
Toxic Pollutants						
1. acenaphthene	405	1	ND			ND
2. acrolein	405	1	ND			ND
3. acrylonitrile	405	1	ND			ND
4. benzene	405	1	ND			ND
5. benzidine	405	1	ND			ND
6. carbon tetrachloride	405	1	ND			ND
7. chlorobenzene	405	1	ND			ND
8. 1,2,4-trichlorobenzene	405	1	ND			ND
9. hexachlorobenzene	405	1	ND			ND
10. 1,2-dichloroethane	405	1	ND			ND
11. 1,1,1-trichloroethane	405	1	ND			ND
12. hexachloroethane	405	1	ND			ND
13. 1,1-dichloroethane	405	1	ND			ND
14. 1,1,2-trichloroethane	405	1	ND			ND

Table V-14 (Continued)

REDUCTION AND CASTING FLOOR WASH
RAW WASTEWATER SAMPLING DATA

Pollutant	Stream Code	Sample Type*	Concentrations (mg/l) Source	Day 1	Day 2	Day 3
Toxic Pollutants (Cont.)						
15. 1,1,2,2-tetrachloroethane	405	1	ND			ND
16. chloroethane	405	1	ND			ND
17. bis(chloromethyl)ether	405	1	ND			ND
18. bis(2-chloroethyl)ether	405	1	ND			ND
19. 2-chloroethyl vinyl ether	405	1	ND			ND
20. 2-chloronaphthalene	405	1	ND			ND
21. 2,4,6-trichlorophenol	405	1	ND			ND
22. p-chloro-m-cresol	405	1	ND			ND
23. chloroform	405	1	ND			ND
24. 2-chlorophenol	405	1	ND			ND
25. 1,2-dichlorobenzene	405	1	ND			ND
26. 1,3-dichlorobenzene	405	1	ND			ND
27. 1,4-dichlorobenzene	405	1	ND			ND
28. 3,3'-dichlorobenzidine	405	1	ND			ND

Table V-14 (Continued)

REDUCTION AND CASTING FLOOR WASH
RAW WASTEWATER SAMPLING DATA

Pollutant	Stream Code	Sample Type*	Concentrations (mg/l) Source	Day 1	Day 2	Day 3
Toxic Pollutants (Cont.)						
29. 1,1-dichloroethylene	405	1	ND			ND
30. 1,2-trans-dichloroethylene	405	1	ND			ND
31. 2,4-dichlorophenol	405	1	ND			ND
32. 1,2-dichloropropane	405	1	ND			ND
33. 1,3-dichloropropene	405	1	ND			ND
34. 2,4-dimethylphenol	405	1	ND			ND
35. 2,4-dinitrotoluene	405	1	ND			ND
36. 2,6-dinitrotoluene	405	1	ND			ND
37. 1,2-diphenylhydrazine	405	1	ND			ND
38. ethylbenzene	405	1	ND			ND
39. fluoranthene	405	1	ND			ND
40. 4-chlorophenyl phenyl ether	405	1	ND			ND
41. 4-bromophenyl phenyl ether	405	1	ND			ND
42. bis(2-chloroisopropyl)ether	405	1	ND			ND

Table V-14 (Continued)

REDUCTION AND CASTING FLOOR WASH
RAW WASTEWATER SAMPLING DATA

Pollutant	Stream Code	Sample Type*	Concentrations (mg/l) Source	Day 1	Day 2	Day 3
Toxic Pollutants (Cont.)						
43. bis(2-chloroethoxy)methane	405	1	ND			ND
44. methylene chloride	405	1	ND			ND
45. methyl chloride (chloromethane)	405	1	ND			ND
46. methyl bromide (bromomethane)	405	1	ND			ND
47. bromoform (tribromomethane)	405	1	ND			ND
48. dichlorobromomethane	405	1	ND			ND
49. trichlorofluoromethane	405	1	ND			ND
50. dichlorodifluoromethane	405	1	ND			ND
51. chlorodibromomethane	405	1	ND			ND
52. hexachlorobutadiene	405	1	ND			ND
53. hexachlorocyclopentadiene	405	1	ND			ND
54. isophorone	405	1	ND			ND
55. naphthalene	405	1	ND			ND
56. nitrobenzene	405	1	ND			ND

Table V-14 (Continued)

REDUCTION AND CASTING FLOOR WASH
RAW WASTEWATER SAMPLING DATA

Pollutant	Stream Code	Sample Type*	Concentrations (mg/l) Source	Day 1	Day 2	Day 3
Toxic Pollutants (Cont.)						
57. 2-nitrophenol	405	1	ND			ND
58. 4-nitrophenol	405	1	ND			ND
59. 2,4-dinitrophenol	405	1	ND			ND
60. 4,6-dinitro-o-cresol	405	1	ND			ND
61. N-nitrosodimethylamine	405	1	ND			ND
62. N-nitrosodiphenylamine	405	1	ND			ND
63. N-nitrosodi-n-propylamine	405	1	ND			ND
64. pentachlorophenol	405	1	ND			ND
65. phenol	405	1	ND			ND
66. bis(2-ethylhexyl)phthalate	405	1	ND			ND
67. butyl benzyl phthalate	405	1	ND			ND
68. di-n-butyl phthalate	405	1	ND			ND
69. di-n-octyl phthalate	405	1	ND			ND
70. diethyl phthalate	405	1	ND			ND

Table V-14 (Continued)

REDUCTION AND CASTING FLOOR WASH
RAW WASTEWATER SAMPLING DATA

Pollutant	Stream Code	Sample Type*	Concentrations (mg/l) Source	Day 1	Day 2	Day 3
Toxic Pollutants (Cont.)						
71. dimethyl phthalate	405	1	ND			ND
72. benzo(a)anthracene	405	1	ND			ND
73. benzo(a)pyrene	405	1	ND			ND
74. benzo(b)fluoranthene	405	1	ND			ND
75. benzo(k)fluoranthene	405	1	ND			ND
76. chrysene	405	1	ND			ND
77. acenaphthylene	405	1	ND			ND
78. anthracene	405	1	ND			ND
79. benzo(ghi)perylene	405	1	ND			ND
80. fluorene	405	1	ND			ND
81. phenanthrene	405	1	ND			ND
82. dibenzo(a,h)anthracene	405	1	ND			ND
83. indeno(1,2,3-c,d)pyrene	405	1	ND			ND
84. pyrene	405	1	ND			ND

Table V-14 (Continued)

REDUCTION AND CASTING FLOOR WASH
RAW WASTEWATER SAMPLING DATA

Pollutant	Stream Code	Sample Type*	Concentrations (mg/l) Source	Day 1	Day 2	Day 3
Toxic Pollutants (Cont.)						
85. tetrachloroethylene	405	1	ND			ND
86. toluene	405	1	ND			ND
87. trichloroethylene	405	1	ND			ND
88. vinyl chloride (chloroethylene)	405	1	ND			ND
114. antimony	126	1	<0.02	0.55	0.54	
	405	1	<0.0006			<0.0006
115. arsenic	126	1	<0.002	<0.002	<0.002	
	405	1	<0.001			0.0028
117. beryllium	126	1	<0.001	<0.01	<0.01	
	405	1	0.012			0.051
118. cadmium	126	1	<0.002	<0.02	<0.02	
	405	1	<0.003			0.064
119. chromium (total)	126	1	<0.005	0.065	<0.05	
	405	1	0.061			0.6
120. copper	126	1	<0.001	0.092	0.084	
	405	1	0.088			2.3
121. cyanide (total)	126	1	<0.01	<0.01	<0.01	
	405	12	<0.01			<0.01

Table V-14 (Continued)

REDUCTION AND CASTING FLOOR WASH
RAW WASTEWATER SAMPLING DATA

Pollutant	Stream Code	Sample Type*	Concentrations (mg/l) Source	Day 1	Day 2	Day 3
Toxic Pollutants (Cont.)						
122. lead	126	1	<0.002	0.089	0.071	
	405	1	0.036			4.1
123. mercury	126	1	0.0003	0.0002	<0.0002	
	405	1	<0.005			<0.0005
124. nickel	126	1	<0.003	<0.03	<0.03	
	405	1	0.055			0.5
125. selenium	126	1	<0.08	0.87	0.88	
	405	1	<0.001			0.0033
126. silver	126	1	<0.002	<0.02	<0.02	
	405	1	<0.0005			0.0008
127. thallium	126	1	<0.09	<0.9	<0.9	
	405	1	<0.001			<0.001
128. zinc	126	1	<0.003	0.32	0.38	
	405	1	0.101			4.0
Nonconventional Pollutants						
Acidity	126	1	114	23	110	
	405	1	<10.0			<10
Alkalinity	126	1	17	100	79	
	405	1	33.0			618

Table V-14 (Continued)

REDUCTION AND CASTING FLOOR WASH
RAW WASTEWATER SAMPLING DATA

Pollutant	Stream Code	Sample Type*	Concentrations (mg/l) Source	Day 1	Day 2	Day 3
Nonconventional Pollutants (Cont.)						
Ammonia Nitrogen	126	1	0.03	084	1.2	
	405	1	0.07			2.1
Chloride	126	1	13	21	22	
	405	1	36.0			74
Fluoride	126	1	0.3	18	13	
	405	1	0.41			1.8
Iron	126	1	0.37	5.4	3.9	
	405	1	0.16			48.0
Magnesium	126	1	9.6	26	20	
	405	1	8.0			1,499.0
Manganese	126	1	0.002	0.047	0.037	
	405	1	0.058			2.3
Nitrate	126	1	0.11	0.36	0.31	
	405	1	<0.09			75
Sulfate	126	1	74	160	740	
	405	1	2.8			8.8
Total Dissolved Solids (TDS)	126	1	160	310	13,000	
	405	1	300			680

Table V-14 (Continued)

REDUCTION AND CASTING FLOOR WASH
RAW WASTEWATER SAMPLING DATA

Pollutant	Stream Code	Sample Type*	Concentrations (mg/l) Source	Day 1	Day 2	Day 3
Toxic Pollutants (Cont.)						
Total Organic Carbon (TOC)	126	1	<1	740	1,900	
	405	1	<10.0			2
Total Solids (TS)	126	1	200	340	15,000	
	405	1	330.0			~~3,000~~ 3,100
Uranium	126	1	0.013	0.054	0.059	
	405	1	0.089			79
Conventional Pollutants						
Oil and Grease	126	1	14	380	440	
	405	1	<1.0			25
Total Suspended Solids (TSS)	126	1	<1	9	35	
	405	1	<1.0			1,600
pH	126	1	9.3	7.4	7.6	
	405	1	6			9

*Sample Type Code:
1 - One-time grab
2 - Manual composite during intermittent process operation
3 - 8-hour manual composite
4 - 8-hour automatic composite
5 - 24-hour manual composite
6 - 24-hour automatic composite

Table V-15

URANIUM LAUNDRY/LAB WASTE
RAW WASTEWATER SAMPLING DATA

Pollutant	Stream Code	Sample Type*	Concentrations (mg/l) Source	Day 1	Day 2	Day 3
Toxic Pollutants						
114. antimony	908	1	<0.0006	<0.0006		
115. arsenic	908	1	<0.001	0.028		
117. beryllium	908	1	0.012	0.015		
118. cadmium	908	1	<0.03	<0.03		
119. chromium (total)	908	1	0.061	<0.03		
120. copper	908	1	0.088	0.25		
121. cyanide (total)	908	1	<0.01	<0.1		
122. lead	908	1	0.036	0.042		
123. mercury	908	1	<0.005	<0.005		
124. nickel	908	1	0.055	<0.03		
125. selenium	908	1	<0.001	<0.001		
126. silver	908	1	<0.0005	0.0048		
127. thallium	908	1	<0.001	<0.001		
128. zinc	908	1	0.101	0.7		

Table V-15 (Continued)

URANIUM LAUNDRY/LAB WASTE
RAW WASTEWATER SAMPLING DATA

Pollutant	Stream Code	Sample Type*	Concentrations (mg/l) Source	Day 1	Day 2	Day 3
Nonconventional Pollutants						
Acidity	908	1	<10.0	<10		
Alkalinity	908	1	33.0	59		
Aluminum	908	1	0.131	0.9		
Ammonia Nitrogen	908	1	0.07	2.3		
Barium	908	1	0.2	0.2		
Boron	908	1	<0.2	0.3		
Calcium	908	1	0.045	17.0		
Chemical Oxygen Demand (COD)	908	1	<50.0	<50		
Chloride	908	1	36.0	210		
Cobalt	908	1	0.044	0.25		
Fluoride	908	1	0.41	0.79		
Iron	908	1	0.16	0.16		
Magnesium	908	1	8.0	5.3		
Manganese	908	1	0.058	0.2		
Molybdenum	908	1	<0.03	<0.03		

Table V-15 (Continued)

URANIUM LAUNDRY/LAB WASTE
RAW WASTEWATER SAMPLING DATA

Pollutant	Stream Code	Sample Type*	Concentrations (mg/l) Source	Day 1	Day 2	Day 3
Nonconventional Pollutants (Cont.)						
Nitrate	908	1	<0.09	<0.09		
Phosphorus	908	1	0.5	12		
Sodium	908	1	74.0	133.0		
Sulfate	908	1	2.8	14		
Tin	908	1	<0.25	<0.2		
Titanium	908	1	<0.2	<0.2		
Total Dissolved Solids (TDS)	908	1	300.0	590		
Total Organic Carbon (TOC)	908	1	<10.0	46		
Total Solids (TS)	908	1	330.0	630		
Uranium	908	1	0.89	0.51		
Vanadium	908	1	<0.03	<0.03		
Yttrium	908	1	<0.1	7.3		

Table V-15 (Continued)

URANIUM LAUNDRY/LAB WASTE
RAW WASTEWATER SAMPLING DATA

Pollutant	Stream Code	Sample Type*	Concentrations (nCi/L) Source	Day 1	Day 2	Day 3
Nonconventional Pollutants (Cont.)						
Gross Alpha	908	1	0.014	13.7		
Gross Beta	908	1	<0.013	18.5		
Radium-226	908	1	<0.0008	3.6		
			Concentrations (mg/l)			
Conventional Pollutants						
Oil and Grease	908	1	<1.0	42		
Total Suspended Solids (TSS)	908	1	<1.0	11		
pH (standard units)	908	1	6	6		

*Sample Type Code: 1 - One-time grab

Table V-16

PLANT 6 FILTRATE
RAW WASTEWATER SAMPLING DATA

Pollutant	Stream Code	Sample Type*	Concentrations (mg/l) Source	Day 1	Day 2	Day 3
Toxic Pollutants						
114. antimony	130	1	<0.02	0.14	0.083	
115. arsenic	130	1	<0.002	<0.002	<0.002	
117. beryllium	130	1	<0.001	<0.001	<0.001	
118. cadmium	130	1	<0.002	0.017	<0.002	
119. chromium (total)	130	1	<0.005	0.080	0.016	
120. copper	130	1	<0.001	1.1	0.94	
121. cyanide (total)	130	1	<0.01	0.30	0.54	
122. lead	130	1	<0.002	0.21	0.005	
123. mercury	130	1	0.0003	<0.0002	0.0004	
124. nickel	130	1	<0.003	0.70	0.092	
125. selenium	130	1	<0.08	0.18	0.12	
126. silver	130	1	<0.002	0.057	0.017	
127. thallium	130	1	<0.09	<0.09	<0.09	
128. zinc	130	1	<0.003	0.15	0.037	

Table V-16 (Continued)

PLANT 6 FILTRATE
RAW WASTEWATER SAMPLING DATA

Pollutant	Stream Code	Sample Type*	Concentrations (mg/l) Source	Day 1	Day 2	Day 3
Nonconventional Pollutants						
Acidity	130	1	114	20	<10	
Alkalinity	130	1	17	100	310	
Ammonia Nitrogen	130	1	0.03	1.7	3.0	
Chloride	130	1	13	380	130	
Fluoride	130	1	0.3	19	8.6	
Iron	130	1	0.37	4.3	0.31	
Magnesium	130	1	9.6	11	0.59	
Manganese	130	1	0.002	0.086	0.002	
Nitrate	130	1	0.11	20,000	11,000	
Sulfate	130	1	74	63	91	
Total Dissolved Solids (TDS)	130	1	160	31,000	14,000	
Total Organic Carbon (TOC)	130	1	<1	73	66	
Total Solids (TS)	130	1	200	31,000	14,000	
Uranium	130	1	0.013	0.063	0.037	

Table V-16 (Continued)

PLANT 6 FILTRATE
RAW WASTEWATER SAMPLING DATA

Pollutant	Stream Code	Sample Type*	Concentrations (mg/l) Source	Day 1	Day 2	Day 3
Conventional Pollutants						
Oil and Grease	130	1	14	52	31	
Total Suspended Solids (TSS)	130	1	<1	170	100	
pH	130	1	9.3	8.2	11.8	

*Sample Type Code:
1 - One-time grab
2 - Manual composite during intermittent process operation
3 - 8-hour manual composite
4 - 8-hour automatic composite
5 - 24-hour manual composite
6 - 24-hour automatic composite

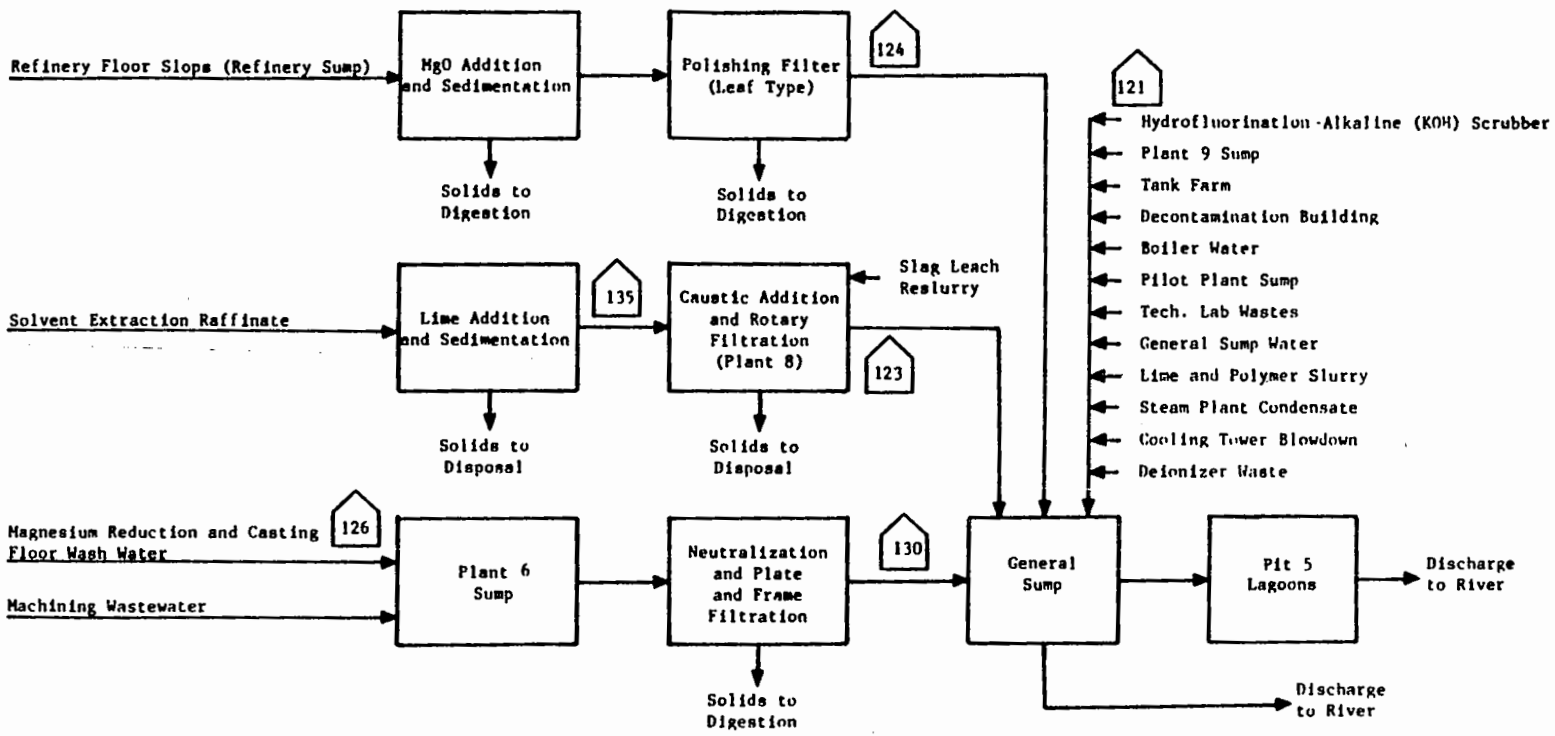

NOTE: Flows indicated are in gallons per day

Figure V-1

SAMPLING LOCATIONS AT SECONDARY URANIUM PLANT A

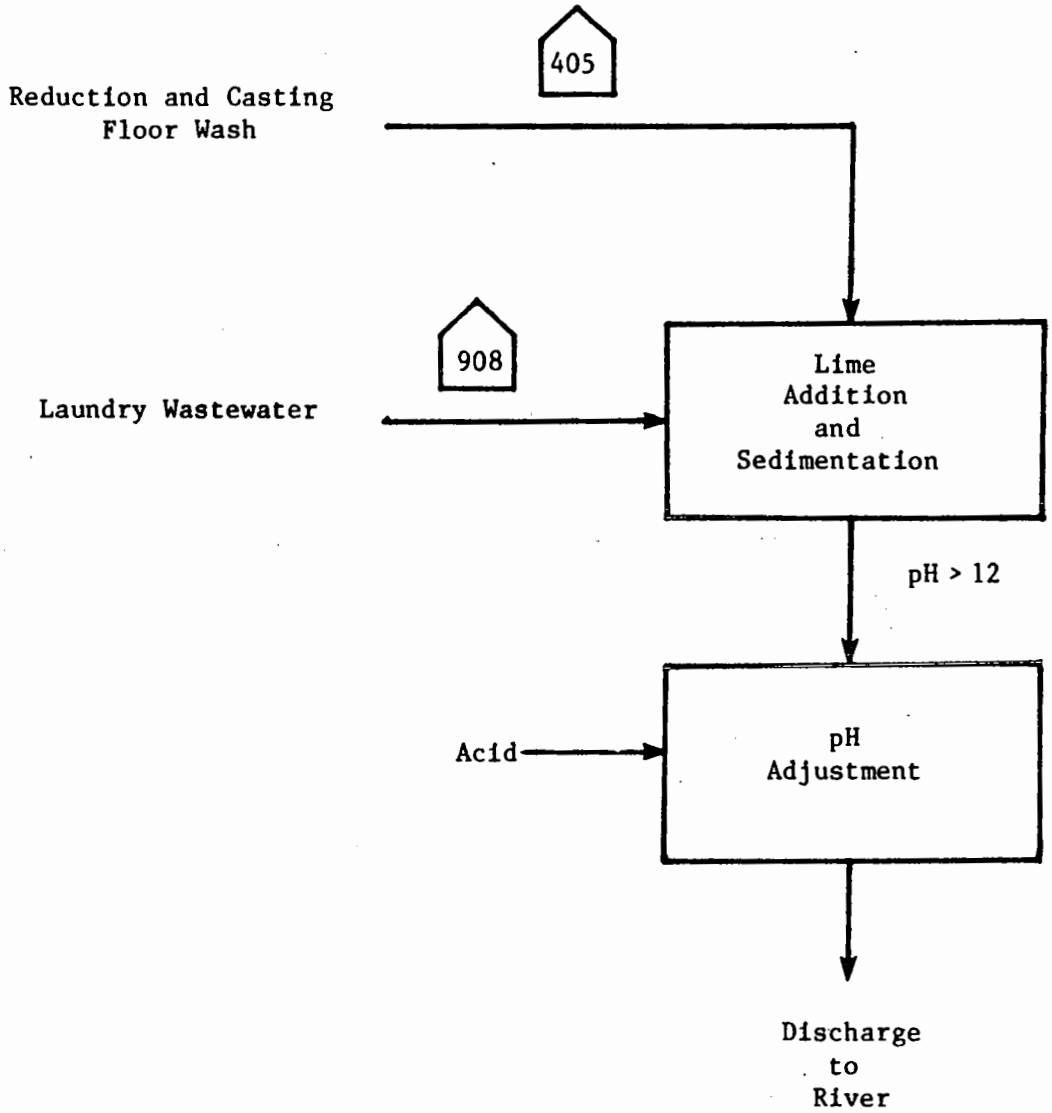

Figure V-2

SAMPLING LOCATIONS AT SECONDARY URANIUM PLANT B

THIS PAGE INTENTIONALLY LEFT BLANK

SECTION VI

SELECTION OF POLLUTANT PARAMETERS

This section examines the chemical analysis data presented in Section V and discusses the selection or exclusion of pollutants for potential limitation. The discussion that follows presents and briefly discusses the selection of conventional and nonconventional pollutants for effluent limitations. Also described is the analysis that was performed to select or exclude toxic priority pollutants for further consideration for limitations and standards. Pollutants will be considered for limitation if they are present in concentrations treatable by the technologies considered in this analysis. The treatable concentrations used for the priority metals were the long-term performance values achievable by chemical precipitation, sedimentation, and filtration. The treatable concentrations used for the priority organics were the long-term performance values achievable by carbon adsorption.

CONVENTIONAL AND NONCONVENTIONAL POLLUTANT PARAMETERS SELECTED

As part of this study, The Agency examined samples from two plants in this subcategory for toxic, conventional and nonconventional pollutants. The conventional and nonconventional pollutants or pollutant parameters selected for limitation in the secondary uranium subcategory are:

fluoride
total suspended solids (TSS)
pH

Fluoride was found in the two samples of hydrofluorination alkaline scrubber wastewater at concentrations of 19,000 mg/l and 32,000 mg/l, significantly higher than the 14.5 mg/l achievable with identified treatment technology. For this reason, fluoride is selected for limitation in this subcategory.

TSS concentrations ranging from less than 1 to 1,600 mg/l were observed in the raw waste samples analyzed for this study. Most of these concentrations are well above the 2.6 mg/l treatable concentration. Most of the specific methods used to remove priority metals do so by converting these metals to precipitates, and these metal-containing precipitates should not be discharged. Meeting a limitation on total suspended solids helps ensure that removal of these precipitated toxic metals has been effective. For these reasons, total suspended solids are selected for limitation in this subcategory.

The pH values observed during this study ranged from 6.0 to 15.3. These values suggest that the pH of secondary uranium wastewaters may be outside the 7.5 to 10.0 range considered desirable for discharge to receiving waters. Many deleterious effects are caused by extreme pH values or rapid changes in pH. Also,

effective removal of toxic metals by precipitation requires careful control of pH. Since pH control within the desirable limits is readily attainable by available treatment, pH is selected for limitation in this subcategory.

Ammonia and uranium have been considered for regulation in this subcategory. Neither pollutant has been selected for regulation at promulgation. Data collected after proposal indicated that ammonia is no longer used in the secondary uranium processing. Therefore, EPA is not promulgating limitations for ammonia. Effluent limitations for uranium have not been established in this subcategory. Pursuant to the Supreme Court's ruling in Train v. Colorado Public Interest Research Group, 426 U.S. 1 (1976). EPA lacks the authority under the Clean Water Act to regulate this pollutant since it is a "source" material as defined by the Nuclear Regulatory Commission under the Atomic Energy Act.

TOXIC PRIORITY POLLUTANTS

The frequency of occurrence of the toxic pollutants in the raw wastewater samples taken is presented in Table VI-1 (page 4373). Table VI-1 is based on the raw wastewater data from streams 124, 135, 121, 126, 405, and 908 (see Section V). These data provide the basis for the categorization of specific pollutants, as discussed below. Treatment plant samples were not considered in the frequency count.

TOXIC POLLUTANTS NEVER DETECTED

The toxic pollutants listed in Table VI-2 (page 4736) were not detected in any raw wastewater samples from this subcategory. Therefore, they are not selected for consideration in establishing limitations:

TOXIC POLLUTANTS PRESENT BELOW CONCENTRATIONS ACHIEVABLE BY TREATMENT

The toxic pollutants listed below are not selected for consideration in establishing limitations because they were not found in any raw wastewater samples from this subcategory above concentrations considered achievable by existing or available treatment technologies.

117. beryllium
121. cyanide
123. mercury

TOXIC POLLUTANTS DETECTED IN A SMALL NUMBER OF SOURCES

The following pollutants were not selected for limitation on the basis that they were detected in the effluent from only a small number of sources within the subcategory, and are uniquely related to only these sources:

66. bis(2-ethylhexyl) phthalate
127. thallium

Although these pollutants were not selected for limitation in establishing national guidelines, it may be appropriate on a case-by-case basis for the local permitting authority to specify effluent limitations.

Bis(2-ethylhexyl) phthalate was detected in one of two samples of secondary uranium raw wastewater analyzed. The observed concentration is 0.989 mg/l. This compound is a plasticizer commonly used in field sampling equipment and is not used or formed as a by-product in this subcategory. For this reason, bis(2-ethyl-hexyl) phthalate is not selected for further consideration for limitation.

Thallium was detected above its treatable concentration of 0.34 mg/l in only one out of 10 samples analyzed. The observed treatable concentration is 3 mg/l. The Agency has no reason to believe that treatable concentrations of thallium should be present in secondary uranium wastewaters and does not believe that the one observed treatable value is representative of the subcategory. For these reasons, thallium is not selected for further consideration for limitation.

PRIORITY POLLUTANTS SELECTED FOR FURTHER CONSIDERATION IN ESTABLISHING LIMITATIONS AND STANDARDS

The toxic pollutants listed below are selected for further consideration in establishing limitations and standards for this subcategory. The toxic pollutants selected for further consideration for limitation are each discussed following the list.

114. antimony
115. arsenic
118. cadmium
119. chromium
120. copper
122. lead
124. nickel
125. selenium
126. silver
128. zinc

Antimony was detected above its treatability concentration of 0.47 mg/l in three out of 10 samples analyzed. Antimony is selected for further consideration for limitation.

Arsenic was detected above its treatability concentration of 0.34 mg/l in two out of 10 samples. These samples showed 12.0 and 14.0 mg/l arsenic in the raw wastewater. Therefore, arsenic is selected for further consideration for limitation.

Cadmium was detected above its treatable concentration of 0.049

mg/l in four samples containing 1.2, 0.73, 0.055, and 0.064 mg/l. Cadmium is selected for further consideration for limitation.

Chromium was detected above its treatability concentration of 0.07 mg/l in three out of 10 samples analyzed. The analytical data showed 0.072, 0.075, and 25 mg/l chromium in the raw wastewater. Chromium is selected for further consideration for limitation.

Copper was detected above its treatability concentration of 0.39 mg/l in four out of 10 samples analyzed. The observed treatable concentrations ranged from 0.084 to 4,160 mg/l. Copper is selected for further consideration for limitation.

Lead was detected above its treatable concentration of 0.08 mg/l in three out of 10 samples analyzed. The samples indicated 0.089, 4.1, and 14 mg/l of lead in the raw wastewater. Lead is selected for further consideration for limitation.

Nickel was detected above its treatability concentration of 0.22 mg/l in four out of 10 samples analyzed. Nickel is selected for further consideration for limitation.

Selenium was detected above its treatability concentration of 0.20 mg/l in five out of 10 raw wastewater samples analyzed. Therefore, selenium is selected for further consideration for limitation.

Silver was detected above its treatability concentration of 0.07 mg/l in three out of 10 samples analyzed. Silver is selected for further consideration for limitation.

Zinc was detected above its treatability concentration of 0.23 mg/l in seven out of 10 samples analyzed. Zinc is selected for further consideration for limitation.

Table VI-1

FREQUENCY OF OCCURRENCE OF PRIORITY POLLUTANTS
SECONDARY URANIUM SUBCATEGORY
RAW WASTEWATER

	Pollutant	Analytical Quantification Concentration (mg/l)(a)	Treatable Concentration (mg/l)(b)	Number of Streams Analyzed	Number of Samples Analyzed	ND	Detected Below Quantification Concentration	Detected Below Treatable Concentration	Detected Above Treatable Concentration
1.	acenaphthene	0.010	0.01	2	2	2			
2.	acrolein	0.010	0.01	2	2	2			
3.	acrylonitrile	0.010	0.01	2	2	2			
4.	benzene	0.010	0.01	2	2	2			
5.	benzidine	0.010	0.01	2	2	2			
6.	carbon tetrachloride	0.010	0.01	2	2	2			
7.	chlorobenzene	0.010	0.01	2	2	2			
8.	1,2,4-trichlorobenzene	0.010	0.01	2	2	2			
9.	hexachlorobenzene	0.010	0.01	2	2	2			
10.	1,2-dichlorobenzene	0.010	0.01	2	2	2			
11.	1,1,1-trichloroethane	0.010	0.01	2	2	2			
12.	hexachloroethane	0.010	0.01	2	2	2			
13.	1,1-dichloroethane	0.010	0.01	2	2	2			
14.	1,1,2-trichloroethane	0.010	0.01	2	2	2			
15.	1,1,2,2-tetrachloroethane	0.010	0.01	2	2	2			
16.	chloroethane	0.010	0.01	2	2	2			
17.	bis(chloromethyl) ether	0.010	0.01	2	2	2			
18.	bis(2-chloroethyl) ether	0.010	0.01	2	2	2			
19.	2-chloroethyl vinyl ether	0.010	0.01	2	2	2			
20.	2-chloronaphthalene	0.010	0.01	2	2	2			
21.	2,4,6-trichlorophenol	0.010	0.01	2	2	2			
22.	parachlorometa cresol	0.010	0.01	2	2	2			
23.	chloroform	0.010	0.01	2	2	2			
24.	2-chlorophenol	0.010	0.01	2	2	2			
25.	1,2-dichlorobenzene	0.010	0.01	2	2	2			
26.	1,3-dichlorobenzene	0.010	0.01	2	2	2			
27.	1,4-dichlorobenzene	0.010	0.01	2	2	2			
28.	3,3'-dichlorobenzidine	0.010	0.01	2	2	2			
29.	1,1-dichloroethylene	0.010	0.01	2	2	2			
30.	1,2-trans-dichloroethylene	0.010	0.01	2	2	2			
31.	2,4-dichlorophenol	0.010	0.01	2	2	2			
32.	1,2-dichloropropane	0.010	0.01	2	2	2			
33.	1,3-dichloropropylene	0.010	0.01	2	2	2			
34.	2,4-dimethylphenol	0.010	0.01	2	2	2			
35.	2,4-dinitrotoluene	0.010	0.01	2	2	2			
36.	2,6-dinitrotoluene	0.010	0.01	2	2	2			
37.	1,2-diphenylhydrazine	0.010	0.01	2	2	2			
38.	ethylbenzene	0.010	0.01	2	2	2			
39.	fluoranthene	0.010	0.01	2	2	2			

Table VI-1 (Continued)

FREQUENCY OF OCCURRENCE OF PRIORITY POLLUTANTS
SECONDARY URANIUM SUBCATEGORY
RAW WASTEWATER

	Pollutant	Analytical Quantification Concentration (mg/l)(a)	Treatable Concentration (mg/l)(b)	Number of Streams Analyzed	Number of Samples Analyzed	ND	Detected Below Quantification Concentration	Detected Below Treatable Concentration	Detected Above Treatable Concentration
40.	4-chlorophenyl phenyl ether	0.010	0.01	2	2	2			
41.	4-bromophenyl phenyl ether	0.010	0.01	2	2	2			
42.	bis(2-chloroisopropyl) ether	0.010	0.01	2	2	2			
43.	bis(2-chloroethoxy) methane	0.010	0.01	2	2	2			
44.	methylene chloride	0.010	0.01	2	2	2			
45.	methyl chloride	0.010	0.01	2	2	2			
46.	methyl bromide	0.010	0.01	2	2	2			
47.	bromoform	0.010	0.01	2	2	2			
48.	dichlorobromomethane	0.010	0.01	2	2	2			
49.	trichlorofluoromethane	0.010	0.01	2	2	2			
50.	dichlorodifluoromethane	0.010	0.01	2	2	2			
51.	chlorodibromomethane	0.010	0.01	2	2	2			
52.	hexachlorobutadiene	0.010	0.01	2	2	2			
53.	hexachlorocyclopentadiene	0.010	0.01	2	2	2			
54.	isophorone	0.010	0.01	2	2	2			
55.	naphthalene	0.010	0.01	2	2	2			
56.	nitrobenzene	0.010	0.01	2	2	2			
57.	2-nitrophenol	0.010	0.01	2	2	2			
58.	4-nitrophenol	0.010	0.01	2	2	2			
59.	2,4-dinitrophenol	0.010	0.01	2	2	2			
60.	4,6-dinitro-o-cresol	0.010	0.01	2	2	2			
61.	N-nitrosodimethylamine	0.010	0.01	2	2	2			
62.	N-nitrosodiphenylamine	0.010	0.01	2	2	2			
63.	N-nitroso-n-propylamine	0.010	0.01	2	2	2			
64.	pentachlorophenol	0.010	0.01	2	2	2			
65.	phenol	0.010	0.01	2	2	2			
66.	bis(2-ethylhexyl) phthalate	0.010	0.01	2	2	1			
67.	butyl benzyl phthalate	0.010	0.01	2	2	2			
68.	di-n-butyl phthalate	0.010	0.01	2	2	2			
69.	di-n-octyl phthalate	0.010	0.01	2	2	2			
70.	diethyl phthalate	0.010	0.01	2	2	2			
71.	dimethyl phthalate	0.010	0.01	2	2	2			
72.	benzo(a)anthracene	0.010	0.01	2	2	2			
73.	benzo(a)pyrene	0.010	0.01	2	2	2			
74.	3,4-benzofluoranthene	0.010	0.01	2	2	2			
75.	benzo(k)fluoranthene	0.010	0.01	2	2	2			
76.	chrysene	0.010	0.01	2	2	2			
77.	acenaphthylene	0.010	0.01	2	2	2			
78.	anthracene	0.010	0.01	2	2	2			

Table VI-1 (Continued)

FREQUENCY OF OCCURRENCE OF PRIORITY POLLUTANTS
SECONDARY URANIUM SUBCATEGORY
RAW WASTEWATER

	Pollutant	Analytical Quantification Concentration (mg/l)(a)	Treatable Concentration (mg/l)(b)	Number of Streams Analyzed	Number of Samples Analyzed	ND	Detected Below Quantification Concentration	Detected Below Treatable Concentration	Detected Above Treatable Concentration
79.	benzo(ghi)perylene	0.010	0.01	2	2	2			
80.	fluorene	0.010	0.01	2	2	2			
81.	phenanthrene	0.010	0.01	2	2	2			
82.	dibenzo(a,h)anthracene	0.010	0.01	2	2	2			
83.	indeno(1,2,3-c,d)pyrene	0.010	0.01	2	2	2			
84.	pyrene	0.010	0.01	2	2	2			
85.	tetrachloroethylene	0.010	0.01	2	2	2			
86.	toluene	0.010	0.01	2	2	2			
87.	trichloroethylene	0.010	0.01	2	2	2			
88.	vinyl chloride	0.010	0.01	2	2	2			
114.	antimony	0.100	0.47	5	10		4	3	3
115.	arsenic	0.010	0.34	5	10		7	1	2
117.	beryllium	0.010	0.20	5	10		7	3	
118.	cadmium	0.002	0.049	5	10		6		4
119.	chromium	0.005	0.07	5	10		2	5	3
120.	copper	0.009	0.39	5	10			6	4
121.	cyanide	0.02	0.047	4	9		8	1	
122.	lead	0.020	0.08	5	10		5	2	3
123.	mercury	0.0001	0.036	5	10		3	7	
124.	nickel	0.005	0.22	5	10		6		4
125.	selenium	0.01	0.20	5	10		4	1	5
126.	silver	0.02	0.07	5	10		7		3
127.	thallium	0.100	0.34	5	10		7	2	1
128.	zinc	0.050	0.23	5	10		3		7
129.	2,3,7,8-tetrachlorodibenzo-p-dioxin (TCDD)	Not Analyzed							

(a) Analytical quantification concentration was reported with the data (see Section V).

(b) Treatable concentrations are based on performance of chemical precipitation, sedimentation, and filtration.

TABLE VI-2

TOXIC POLLUTANTS NEVER DETECTED

1. acenaphthene
2. acrolein
3. acrylonitrile
4. benzene
5. benzidine
6. carbon tetrachloride (tetrachloromethane)
7. chlorobenzene
8. 1,2,4-trichlorobenzene
9. hexachlorobenzene
10. 1,2-dichloroethane
11. 1,1,1-trichloroethane
12. hexachloroethane
13. 1,1-dichloroethane
14. 1,1,2-trichloroethane
15. 1,1,2,2-tetrachloroethane
16. chloroethane
17. bis (chloromethyl) ether (deleted)
18. bis (2-chloroethyl) ether
19. 2-chloroethyl vinyl ether (mixed)
20. 2-chloronaphthalene
21. 2,4,6-trichlorophenol
22. parachlorometa cresol
23. chloroform (trichloromethane)
2?. 2-chlorophenol
25. 1,2-dichlorobenzene
26. 1,3-dichlorobenzene
27. 1,4-dichlorobenzene
28. 3,3'-dichlorobenzidine
29. 1,1-dichloroethylene
30. 1,2-trans-dichloroethylene
31. 2,4-dichlorophenol
32. 1,2-dichloropropane
33. 1,2-dichloropropylene (1,3-dichloropropene)
34. 2,4-dimethylphenol
35. 2,4-dinitrotoluene
36. 2,6-dinitrotoluene
37. 1,2-diphenylhydrazine
38. ethylbenzene
39. fluoranthene
40. 4-chlorophenyl phenyl ether
41. 4-bromophenyl phenyl ether
42. bis(2-chloroisopropyl) ether
43. bis(2-choroethoxy) methane
44. methylene chloride (dichloromethane)
45. methyl chloride (chloromethane)
46. methyl bromide (bromomethane)
47. bromoform (tribromomethane)
48. dichlorobromomethane
49. trichlorofluoromethane (deleted)

TABLE VI-2 (Continued)

TOXIC POLLUTANTS NEVER DETECTED

50. dichlorodifluoromethane (deleted)
51. chlorodibromomethane
52. hexachlorobutadiene
53. hexachlorocyclopentadiene
54. isophorone
55. naphthalene
56. nitrobenzene
57. 2-nitrophenol
58. 4-nitrophenol
59. 2,4-dinitrophenol
60. 4,6-dinitro-o-cresol
61. N-nitrosodimethylamine
62. N-nitrosodiphenylamine
63. N-nitrosodi-n-propylamine
64. pentachlorophenol
65. phenol
67. butyl benzyl phthalate
68. di-n-butyl phthalate
69. di-n-octyl phthalate
70. diethyl phthalate
71. dimethyl phthalate
72. benzo (a)anthracene (1,2-benzanthracene)
73. benzo (a)pyrene (3,4-benzopyrene)
74. 3,4-benzofluoranthene
75. benzo(k)fluoranthane (11,12-benzofluoranthene)
76. chrysene
77. acenaphthylene
78. anthracene
79. benzo(ghi)perylene (1,11-benzoperylene)
80. fluorene
81. phenanthrene
82. dibenzo (a,h)anthracene (1,2,5,6-dibenzanthracene)
83. indeno (1,2,3-cd)pyrene (w,e,-o-phenylenepyrene)
84. pyrene
85. tetrachloroethylene
86. toluene
87. trichloroethylene
88. vinyl chloride (chloroethylene)
89. aldrin*
90. dieldrin*
91. chlordane (technical mixture and metabolites)*
92. 4,4'-DDT*
93. 4,4'-DDE(p,p'DDX)*
94. 4,4'-DDD(p,p'TDE)*
95. a-endosulfan.Alpha*
96. b-endosulfan-8eta*
97. endosulfan sulfate*
98. endrin*
99. endrin aldehyde*

TABLE VI-2 (Continued)

TOXIC POLLUTANTS NEVER DETECTED

100. heptachlor*
101. heptachlor epoxide*
102. a-Alpha-BHC*
103. b-Beta-BHC*
104. r-Gamma-BHC(lindane)*
105. g-Delta-BHC*
106. PCB-1242 (Arochlor 1242)*
107. PCB-1254 (Arochlor 1254)*
108. PCB-1221 (Arochlor 1221)*
109. PCB-1232 (Arochlor 1232)*
110. PCB-1248 (Arochlor 1248)*
111. PCB-1260 (Arochlor 1260)*
112. PCB-1016 (Arochlor 1016)*
113. toxaphene*
116. asbestos (Fibrous)
129. 2,3,7,8-tetra chlorodibenzo-p-dioxin (TCDD)

*We did not analyze for these pollutants in samples of raw wastewater from this subcategory. These pollutants are not believed to be present based on the Agency's best engineering judgment which includes consideration of raw materials and process operations.

SECTION VII

CONTROL AND TREATMENT TECHNOLOGIES

The preceding sections of this supplement discussed the sources, flows, and characteristics of the wastewaters from the secondary uranium plants. This section summarizes the description of these wastewaters and indicates the treatment technologies which are currently practiced in the secondary uranium subcategory for each wastewater stream. Also, this section presents the control and treatment technology options which were examined by the Agency for possible application to the secondary uranium subcategory.

CURRENT CONTROL AND TREATMENT PRACTICES

This section presents a summary of the control and treatment technologies that are currently being applied to each of the sources generating wastewater in this subcategory. As discussed in Section V, wastewater associated with the secondary uranium subcategory is characterized by the presence of the toxic metal pollutants and suspended solids. This analysis is supported by the raw (untreated) wastewater data, presented in Section V, from a uranium ore mill. It is expected that these pollutants are present in each of the waste streams at concentrations above treatability, and these waste streams are commonly combined for treatment. Construction of one wastewater treatment system for combined treatment allows plants to take advantage of economic scale and in some instances to combine streams of different alkalinity to reduce treatment chemical requirements. The direct discharging plant in this subcategory currently has a combined wastewater treatment system including chemical precipitation and sedimentation. The options selected for consideration for BPT, BAT, NSPS, and pretreatment will be summarized toward the end of this section.

REFINERY SUMP FILTRATE

Refinery sump filtrate wastewater has its source in the digestion operation. Components of this wastewater include pump leakage, pump seal water, spills, and washdown water. All these flows are collected in a sump to which chemicals are added to precipitate uranium. After filtration with a leaf filter, the filtrate is discharged to a general sump for treatment consisting of neutralization, flocculation and sedimentation, and discharge to a surface water.

SLAG LEACH RESLURRY

In addition to solid uranium scrap and uranium residues, magnesium fluoride slag from the magnesium reduction operation is used as a raw material for uranium recovery. The recovery process involves acid leaching the slag to dissolve uranium. Separation of the uranium-containing acid and the leached slag is

done by filtration, after which the slag solids are reslurried with water. The slurry is treated by neutralization and rotary precoat filtration. The filtrate is discharged to a surface water.

DIGESTION WET AIR POLLUTION CONTROL

The acid leaching operation includes a water scrubber for control of acid fumes generated from leaching. The system recirculates water to absorb particulates and acid gases, and a blowdown stream prevents build-up of acid and particulates. The blowdown stream is reused in the acid digestion and dissolution operation. Since the scrubber liquor is entirely recycled and reused, no discharge to the treatment system occurs.

SOLVENT EXTRACTION RAFFINATE FILTRATE

Purification of the uranium compound that results from acid leaching is done by solvent extraction. An organic solvent is used to selectively extract the uranium compound from the acid solution. Impurities from acid leaching are left in the acid solution. This solvent extraction raffinate filtrate is discharged to combined treatment consisting of neutralization and sedimentation, followed by discharge to a surface water.

EVAPORATION AND DENITRATION WET AIR POLLUTION CONTROL

After purification by solvent extraction, the uranyl nitrate solution is concentrated by evaporation. The calcination step which follows converts the uranium compound to uranium trioxide. Calcination off-gases contain much nitric acid. Since the scrubber liquor absorbs the nitric acid, the liquor is not discharged as a wastewater but used to dilute fresh acid in the digestion operation. Therefore, no wastewater is discharged from the evaporation and denitration operations.

HYDROFLUORINATION WATER SCRUBBER

Hydrofluorination, as described above, involves contacting uranium dioxide with vaporized hydrofluoric acid at an elevated temperature. Unreacted hydrofluoric acid fumes are passed through a water scrubber which absorbs much of the hydrofluoric acid. Vent gases pass to the second scrubber noted above. Since the scrubber liquor over the hydrofluorination unit absorbs acid, the liquor is circulated until a specified concentration of hydrofluoric acid is attained. Then the solution is drawn off and sold for industrial use. Therefore, the hydrofluorination water scrubber discharges no wastewater to treatment.

HYDROFLUORINATION ALKALINE SCRUBBER

Hydrofluorination involves contacting uranium dioxide with hydrofluoric acid to produce uranium tetrafluoride. The offgases from this operation, after passing through a water scrubber, are scrubbed by a circulating KOH solution which neutralizes and

scrubs the acidic fumes. The scrubber liquor is completely recycled until scrubber efficiency diminishes; then the liquor is batch discharged to combined treatment. Treatment consists of neutralization and sedimentation, followed by direct discharge to a surface water.

MAGNESIUM REDUCTION AND CASTING FLOOR WASH WATER

Water is used to wash floors and equipment in the magnesium reduction and casting area. One plant uses a floor washing machine and a second plant washes floors manually. The plant which uses a floor washing machine discharges the wash water to a batch chemical precipitation and sedimentation treatment system prior to discharge to surface waters. At the other plant reporting this stream, the reduction and casting wash water is combined with machining wastewater and treated using chemical precipitation and rotary precoat filtration prior to discharge to surface waters.

LAUNDRY WASTEWATER

Two plants reported the use of water to wash the clothing of plant personnel working in production areas. One facility treats the resulting wastewater in a batch chemical precipitation and sedimentation treatment system prior to discharge to surface waters. The other facility reporting this practice, discharges laundry wastewater to surface waters after treatment consisting of chemical precipitation and sedimentation.

CONTROL AND TREATMENT OPTIONS

The Agency examined two control and treatment technology options that are applicable to the secondary uranium subcategory. The options selected for evaluation represent applicable end-of-pipe treatment technologies.

Examination of the waste streams in this subcategory shows that no further in-process flow reduction is achievable. Recycle of laundry wastewater has been considered in Section X, BAT. On the VI), options including activated carbon adsorption were not considered.

OPTION A

Option A for the secondary uranium subcategory requires control and treatment technologies to reduce the discharge of pollutant mass.

The Option A treatment scheme consists of chemical precipitation and sedimentation technology. Specifically, lime or some other alkaline compound is used to precipitate dissolved metals as metal hydroxides. The metal hydroxides and suspended solids settle out and the sludge is collected. Vacuum filtration is used to dewater sludge.

OPTION C

Option C for the secondary uranium subcategory consists of all control and treatment requirements of Option A (chemical precipitation and sedimentation) plus multimedia filtration technology added at the end of the Option A treatment scheme. Multimedia filtration is used to remove suspended solids, including precipitates of metals, beyond the concentration attainable by gravity sedimentation. The filter suggested is of the gravity, mixed-media type, although other forms of filters, such as rapid sand filters or pressure filters would perform satisfactorily. The addition of filters also provides consistent removal during periods of time in which there are rapid increases in flows or loadings of pollutants to the treatment system.

SECTION VIII

COSTS, ENERGY, AND NONWATER QUALITY ASPECTS

This section presents a summary of compliance costs for the secondary uranium subcategory and a description of the treatment options and subcategory-specific assumptions used to develop these estimates. Together with the estimated pollutant removal performance presented in Section X of this supplement, these cost estimates provide a basis for evaluating each regulatory option. These cost estimates are also used in determining the probable economic impact of regulation on the subcategory at different pollutant discharge levels. In addition, this section addresses nonwater quality environmental impacts of wastewater treatment and control alternatives, including air pollution, solid wastes, and energy requirements, which are specific to the secondary uranium subcategory.

TREATMENT OPTIONS FOR EXISTING SOURCES

As discussed in Section VII, two treatment options have been developed and considered in promulgating limitations and standards for the secondary uranium subcategory. These options are summarized below and schematically presented in Figures X-1 and X-2 (pages 4777 and 4778).

OPTION A

The Option A treatment scheme consists of chemical precipitation and sedimentation technology.

OPTION C

Option C for the secondary uranium subcategory consists of all control and treatment requirements of Option A (chemical precipitation and sedimentation) plus multimedia filtration technology added at the end of the Option A treatment scheme.

COST METHODOLOGY

A detailed discussion of the methodology used to develop the compliance costs is presented in Section VIII of Vol. I. Plant-by-plant compliance costs for the nonferrous metals manufacturing category have been revised as necessary following proposal. These revisions calculate incremental costs, above treatment already in place, necessary to comply with the promulgated effluent limitations and standards and are presented in the administrative record supporting this regulation. A comparison of the costs developed for proposal and the revised costs for the final regulation are presented in Table VIII-1 (page 4746) for the direct discharger in this subcategory.

Each of the general assumptions used to develop compliance costs

is presented in Section VIII of the General Development Document. Subcategory-specific assumptions were used in developing compliance costs for the secondary uranium subcategory are listed below.

(1) Costs for purchasing a floor washing machine were included in the compliance cost estimates for plant 1175 because the Agency believes that this piece of equipment is necessary for this facility to achieve the flow allowance for magnesium reduction and casting floor wash water.

NONWATER QUALITY ASPECTS

A general discussion of the nonwater quality aspects of the control and treatment options considered for the nonferrous metals category is contained in Section VIII of the General Development Document. Nonwater quality impacts specific to the secondary uranium subcategory, including energy requirements, solid waste and air pollution are discussed below.

ENERGY REQUIREMENTS

The methodology used for determining the energy requirements for the various options is discussed in Section VIII of the General Development Document. Energy requirements for Option A are estimated at 52,000 kwh/yr, and for Option C the estimated requirement is 62,000 kwh/yr. Option C energy requirements increased over those for Option A because filtration is being added as an end-of-pipe treatment technology. Since recycle and reuse of scrubber liquor is already practiced in this subcategory, energy requirement savings resulting from flow reduction measures are not reflected in this analysis. Both Option A and Option C energy requirements represent less than 1 percent of the energy usage in the secondary uranium industry. It is therefore concluded that the energy requirements of the treatment options considered will have no significant impact on total plant energy consumption.

SOLID WASTE

Sludge generated in the secondary uranium subcategory is due to the precipitation of metals as hydroxides and carbonates using lime. Sludges associated with the secondary uranium subcategory will necessarily contain quantities of toxic metal pollutants.

Wastes generated by secondary metal industries can be regulated as hazardous. However, the Agency examined the solid wastes that would be generated at secondary nonferrous metals manufacturing plants by the suggested treatment technologies and believes they are not hazardous wastes under the Agency's regulations implementing Section 3001 of the Resource Conservation and Recovery Act. None of the secondary uranium subcategory wastes are listed specifically as hazardous, nor are they likely to exhibit a characteristic of hazardous waste. This judgment is

made based on the recommended technology of lime precipitation and filtration. By the addition of a small excess of lime during treatment, similar sludges, specifically toxic metal bearing sludges, generated by other industries such as the iron and steel industry passed the Extraction Procedure (EP) toxicity test. See 40 CFR §261.24. Thus, the Agency believes that the wastewater sludges will similarly not be EP toxic if the recommended technology is applied.

Although it is the Agency's view that solid wastes generated as a result of these guidelines are not expected to be hazardous, generators of these wastes must test the waste to determine if the wastes meet any of the characteristics of hazardous waste (see 40 CFR 262.11).

If these wastes should be identified or are listed as hazardous, they will come within the scope of RCRA's "cradle to grave" hazardous waste management program, requiring regulation from, the point of generation to point of final disposition. EPA's generator standards would require generators to hazardous nonferrous metals manufacturing wastes to meet containerization, labeling, recordkeeping, and reporting requirements; if plants dispose of hazardous wastes off-site, they would have to prepare a manifest which would track the movement of the wastes from the generator's premises to a permitted off-site treatment, storage, or disposal facility. See 40 CFR 262.20 45 FR 33142 (May 19, 1980), as amended at 45 FR 86973 (December 31, 1980). The transporter regulations require transporters of hazardous wastes to comply with the manifest system to assure that the wastes are delivered to a permitted facility. See 40 CFR 263.20 45 FR 33151 (May 19, 1980), as amended at 45 FR 86973 (December 31, 1980). Finally, RCRA regulations establish standards for hazardous waste treatment, storage, and disposal facilities allowed to receive such wastes. See 40 CFR Part 464 46 FR 2802 (January 12, 1981), 47 FR 32274 (July 26, 1982).

Even if these wastes are not identified as hazardous, they still must be disposed of in compliance with the Subtitle D open dumping standards, implementing 4004 of RCRA. See 44 FR 53438 (September 13, 1979). It is estimated that the secondary uranium subcategory will generate 285 metric tons of sludge per year when implementing the BPT treatment technology. The Agency has calculated as part of the costs for wastewater treatment the cost of hauling and disposing of these wastes.

AIR POLLUTION

There is no reason to believe that any substantial air pollution problems will result from implementation of chemical precipitation, sedimentation, and multimedia filtration. The model technologies transfer pollutants to solid waste and are not likely to transfer pollutants to air.

TABLE VIII-1

COST OF COMPLIANCE FOR THE SECONDARY URANIUM SUBCATEGORY
DIRECT DISCHARGERS

(March 1982 Dollars)

	Proposal Cost		Promulgation Cost	
Option	Capital Cost	Annual Cost	Capital Cost	Annual Cost
A	28,600	73,600	54,800	90,400
C	54,300	86,500	88,000	106,700

SECTION IX

BEST PRACTICABLE CONTROL TECHNOLOGY CURRENTLY AVAILABLE

This section defines the effluent characteristics attainable through the application of best practicable control technology currently available (BPT). BPT reflects the existing performance by plants of various sizes, ages, and manufacturing processes within the secondary uranium subcategory, as well as the established performance of the model BPT systems. Particular consideration is given to the treatment already in place at plants within the data base.

The factors considered in identifying BPT include the total cost of applying the technology in relation to the effluent reduction benefits from such application, the age of equipment and facilities involved, the manufacturing processes used, nonwater quality environmental impacts (including energy requirements), and other factors the Administrator considers appropriate. In general, the BPT level represents the average of the existing performances of plants of various ages, sizes, processes, or other common characteristics. Where existing performance is uniformly inadequate, BPT may be transferred from a different subcategory or category. Limitations based on transfer of technology are supported by a rationale concluding that the technology is, indeed, transferable, and a reasonable prediction that it will be capable of achieving the prescribed effluent limits BPT focuses on end-of-pipe treatment rather than process changes or internal controls, except where such practices are common industry practice.

TECHNICAL APPROACH TO BPT

The Agency studied the nonferrous metals category to identify the processes used, the wastewaters generated, and the treatment processes installed. Information was collected from industry using data collection portfolios, and specific plants were sampled and the wastewaters analyzed. In making technical assessments of data, reviewing manufacturing processes, and assessing wastewater treatment technology options, both indirect and direct dischargers have been considered as a single group. An examination of plants and processes did not indicate any process differences based on the type of discharge, whether it be direct or indirect.

As explained in Section IV, the secondary uranium subcategory has been subdivided into seven potential wastewater sources. Since the water use, discharge rates, and pollutant characteristics of each of these wastewaters is potentially unique, effluent limitations will be developed for each of the seven subdivisions.

For each of the subdivisions, a specific approach was followed

for the development of BPT mass limitations. The first requirement to calculate these limitations is to account for production and flow variability from plant to plant. Therefore, a unit of production or production normalizing parameter (PNP) was determined for each wastewater stream which could then be related to the flow from the process to determine a production normalized flow. Selection of the PNP for each process element is discussed in Section IV. Each plant within the subcategory was then analyzed to determine which subdivisions were present, the specific flow rates generated for each subdivision, and the specific production normalized flows for each subdivision. This analysis is discussed in detail in Section V. Nonprocess wastewaters such as rainfall runoff and noncontact cooling water are not considered in the analysis.

Production normalized flows for each subdivision were then analyzed to determine the flow to be used as part of the basis for BPT mass limitations. The selected flow (sometimes referred to as the BPT regulatory flow or BPT discharge rate) reflects the water use controls which are common practices within the category. The BPT regulatory flow is based on the average of all applicable data. Plants with normalized flows above the average may have to implement some method of flow reduction to achieve the BPT limitations.

The second requirement to calculate mass limitations is the set of concentrations that are achievable by application of the BPT level of treatment technology. Section VII discusses the various control and treatment technologies which are currently in place for each wastewater source. In most cases, the current control and treatment technologies consist of chemical precipitation and sedimentation (lime and settle technology) and a combination of reuse and recycle to reduce flow.

Using these regulatory flows and the achievable concentrations, the next step is to calculate mass loadings for each wastewater source or subdivision. This calculation was made on a stream-by-stream basis, primarily because plants in this subcategory may perform one or more of the operations in various combinations. The mass loadings (milligrams of pollutant per kilogram of production - mg/kg) were calculated based on the BPT regulatory flow (l/kkg) and the concentration achievable by the BPT level of treatment technology (mg/l) for each pollutant parameter to be limited under BPT. These mass loadings are published in the Federal Register and in 40 CFR Part 421 as the effluent limitations.

The mass loadings which are allowed under BPT for each plant will be the sum of the individual mass loadings for the various wastewater sources which are found at particular plants. Accordingly, all the wastewater generated within a plant may be combined for treatment in a single or common treatment system, but the effluent limitations for these combined wastewaters are based on the various wastewater sources which actually contribute to the combined flow. This method accounts for the variety of

combinations of wastewater sources and production processes which may be found at secondary uranium plants.

The Agency usually establishes wastewater limitations in terms of mass rather than concentration. This approach prevents the use of dilution as a treatment method (except for controlling pH). The production normalized wastewater flow (l/kkg) is a link between the production operations and the effluent limitations. The pollutant discharge attributable to each operation can be calculated from the normalized flow and effluent concentration achievable by the treatment technology and summed to derive an appropriate limitation for each plant.

INDUSTRY COST AND POLLUTANT REMOVAL ESTIMATES

In balancing costs in relation to pollutant removal estimates, EPA considers the volume and nature of existing discharges, the volume and nature of discharges expected after application of BPT, the general environmental effects of the pollutants, and the cost and economic impacts of the required pollution control level. The Act does not require or permit consideration of water quality problems attributable to particular point sources or industries, or water quality improvements in particular water quality bodies. Accordingly, water quality considerations were not the basis for selecting the proposed or promulgated BPT.

The methodology for calculating pollutant removal estimates and plant compliance costs is discussed in Section X. The pollutant removal estimates have been revised since proposal. Table X-1 (page 4769) shows the pollutant removal estimates for each treatment option for direct dischargers. Compliance costs for direct dischargers are presented in Table X-2 (page 4770).

BPT OPTION SELECTION - PROPOSAL

EPA proposed BPT requirements for the secondary uranium subcategory. The technology basis for the BPT limitations is lime precipitation and sedimentation technology to remove metals and solids from combined wastewaters and to control pH. BPT also includes ammonia steam stripping. These technologies are already in-place at the one discharger in the subcategory. The pollutants specifically proposed for regulation at BPT are chromium, copper, nickel, ammonia, fluoride, uranium, TSS, and pH.

Implementation of the proposed BPT limitations will remove annually an estimated 1,280 kg of toxic metals, 12,000 kg of ammonia and 1,763 kg of TSS. While the one discharging plant has the equipment in-place to comply with BPT, we do not believe that the plant is currently achieving the proposed BPT limitations. We project capital and annual costs of $28,600 and $37,644 (1982 dollars) respectively for modifications to technology presented in-place at the discharging facility to achieve proposed BPT regulations.

BPT OPTION SELECTION - PROMULGATION

The promulgated technology basis for the BPT limitations is Option A. chemical precipitation and sedimentation technology to remove metals and solids from combined wastewaters and to control pH. The promulgated technology basis for BPT limitations differs from the proposed technology basis. These technologies are demonstrated and economically achievable since they are already in place at several discharging plants throughout the nonferrous metals manufacturing category.

Implementation of the promulgated BPT limitations will remove annually an estimated 100 kg of toxic metals, 4,283 kg of nonconventional pollutants, and 651 kg of TSS. While the one discharging plant has most of the equipment in-place to comply with BPT, EPA does not believe that the plant is currently achieving the promulgated BPT limitations. The Agency projects capital and annual costs of $54,800 and $90,400 (1982 dollars) respectively for modifications to technology presently in-place at the discharging facility to achieve promulgated BPT regulations. The end-of-pipe treatment configuration for Option A is presented in Figure IX-1 (page 4761).

WASTEWATER DISCHARGE RATES

A BPT discharge rate is calculated for each subdivision based on the average of the flows of the existing plants, as determined from analysis of data collection portfolios. The discharge rate is used with the achievable treatment concentrations to determine BPT effluent limitations. Since the discharge rate may be different for each wastewater source, separate production normalized discharge rates for each of the seven wastewater sources are discussed below and summarized in Table IX-1. The discharge rates are normalized on a production basis by relating the amount of wastewater generated to the mass of the intermediate product which is produced by the process associated with the waste stream in question. These production normalizing parameters, or PNPs, are also listed in Table IX-1.

Section V of this document further describes the discharge flow rates and presents the water use and discharge flow rates for each plant by subdivision in Tables V-1 through V-7 (pages 4788 - 4790).

REFINERY SUMP FILTRATE

The BPT wastewater discharge rate at proposal for refinery sump filtrate (formerly, refinery filtrate at proposal) was 34,800 l/kkg (8,340 gal/ton) of uranium trioxide produced. This rate was allocated for those plants that acid leach scrap uranium materials to recover the uranium. The BPT discharge rate was based on flow information provided by one plant. Post-proposal comments and information showed that the proposed flow was not accurate and that the production normalizing parameter was not appropriate. EPA studied the data and decided to promulgate a

corrected (larger) flow allowance and, in addition, change the PNP for this subdivision.

The BPT wastewater discharge rate at promulgation for refinery sump filtrate is 73,340 l/kkg (17,580 gal/ton) of uranium processed in the refinery. This rate is allocated only for those plants that employ acid leaching and dissolution operations to recover uranium from secondary sources. The flow from the one plant in this subcategory having this operation was used to determine the promulgated BPT regulatory flow.

SLAG LEACH RESLURRY

The BPT wastewater discharge rate at proposal for slag leach reslurry (formerly, slag leach slurry at proposal) was 3,800 l/kkg (910 gal/ton) of uranium trioxide produced. This rate was allocated only for those plants which leach magnesium fluoride slag, recycled from the magnesium reduction operation, to recover the residual uranium in the slag. Post-proposal comments from the industry indicated a difficulty with the PNP chosen for this subdivision. If a plant operates leaching on a campaign basis, it must have a way to determine its regulatory allowances without waiting for the next process step to be completed. EPA acknowledged this difficulty and chose a new PNP for promulgation. However, the wastewater flow (l/yr) used to calculate the regulatory flow (l/kkg) was not altered.

The promulgated BPT wastewater discharge rate for slag leach reslurry is 4,566 l/kkg (1,094 gal/ton) of uranium processed in the refinery. This rate is allocated only for those plants which recover uranium by leaching magnesium fluoride slag. One plant in this subcategory has this operation, and the promulgated BPT discharge rate is based on the water use at this plant. Table V-2 (page 4688) presents water use and discharge rates for slag leach reslurry.

DIGESTION WET AIR POLLUTION CONTROL

The BPT wastewater discharge rate at proposal for digestion wet air pollution control was 30 l/kkg (7.2 gal/ton) of uranium trioxide produced based on partial recycle of scrubber liquor. This rate was allocated only for those plants that incorporate a water scrubber on the acid leaching and dissolution operation. Post-proposal comments from the industry clarified the Agency's understanding of the digestion scrubber's operation. The comments indicated that scrubber blowdown is reused in the leaching and dissolution operation because it contains nitric acid. Thus no discharge occurs from this scrubber, and EPA decided to change the discharge rate for this subdivision at promulgation.

The BPT wastewater discharge rate at promulgation for digestion wet air pollution control is zero. This rate is allocated to those plants that operate a water scrubber to control fumes from acid leaching and dissolution. The promulgated BPT discharge

rate is based upon water use information supplied by a plant in this subcategory having a digestion operation scrubber. Existing practice at this plant is such that 100 percent of the scrubber liquor is recycled or reused. Therefore, it is appropriate that the BPT regulatory flow should be zero.

SOLVENT EXTRACTION RAFFINATE FILTRATE

The BPT wastewater discharge rate used at proposal for solvent extraction raffinate filtrate (formerly, solvent extraction raffinate at proposal) was 5,300 l/kkg (1,270 gal/ton) of uranium trioxide produced. This rate was allocated for those plants which purify the acid-dissolved uranium compound by extracting the uranium compound into an organic solvent, leaving behind all impurities that were leached along with the uranium. Post-proposal comments from the industry indicated a difficulty with the PNP chosen for this subdivision. If a plant operates solvent extraction on a campaign basis, it must have a method to determine its regulatory allowance without waiting for the next process step to be completed. EPA acknowledged this difficulty and chose a new PNP for promulgation. However, the wastewater flow (l/yr) used to calculate the regulatory flow (l/kkg) was not altered.

The BPT wastewater discharge rate at promulgation for action raffinate filtrate is 6,369 l/kkg (1,526 gal/ton) of uranium those plants using solvent extraction procedures to purify uranium compounds dissolved in solution as a result of acid leaching and dissolution. The BPT discharge rate at promulgation is based on the water use at one plant in the subcategory having this operation. Production normalized water use and discharge rates are presented in Table V-4 (page 4689).

EVAPORATION AND DENITRATION WET AIR POLLUTION CONTROL

Zero discharge is used at promulgation for evaporation and denitration wet air pollution control (formerly, evaporation and calcination wet air pollution control at proposal). This requirement is applicable to those plants that use evaporators and calcinators to respectively concentrate an intermediate uranium compound and then calcine it to produce uranium trioxide. The BPT discharge rate is promulgated as zero because the one discharging plant in this subcategory that uses these operations recycles all scrubber liquor to the digestion operation. This production normalized discharge rate is also presented in Table V-5 (page 4689).

HYDROFLUORINATION WATER SCRUBBER

Zero discharge is used at promulgation for hydrofluorination water scrubber (formerly, hydrofluorination wet air pollution control at proposal) wastewater. This requirement is applicable only to those plants which use a water scrubber to control acid fumes from the hydrofluorination unit. The BPT discharge rate is promulgated as zero because the one plant in this subcategory

that operates such a scrubber recycles the scrubber liquor to absorb the hydrofluoric acid fumes until a desired concentration of hydrofluoric acid is attained. Then the scrubber solution is drawn off and sold for industrial use. Since this recycle technology is demonstrated within this subcategory, the BPT discharge rate reflects that capability. Table V-6 (page 4689) also presents the water use and discharge rate for the hydrofluorination water scrubber system.

HYDROFLUORINATION ALKALINE SCRUBBER

The BPT wastewater discharge rate at proposal and promulgation for hydrofluorination alkaline scrubber (formerly, hydrogen reduction and hydrofluorination KOH wet air pollution control at proposal) wastewater is 20 l/kkg (4.8 gal/ton) of uranium tetrafluoride produced based on partial recycle. This rate is allocated only for those plants that hydrofluorinate uranium dioxide to produce uranium tetrafluoride, and scrub the gases from this operation with a KOH scrubber. The BPT discharge rate reflects the demonstrated performance of this scrubber operating at a high rate of recycle. Table V-7 (page 4690) also presents the water use and discharge rates for this wastewater stream.

MAGNESIUM REDUCTION AND CASTING FLOOR WASH WATER

The BPT wastewater discharge rate used at promulgation for magnesium reduction and casting floor wash water is 30.1 l/kkg of uranium produced by magnesium reduction. This rate is allocated to all plants which produce uranium metal by magnesium reduction of uranium tetrafluoride. This rate is based on the production normalized flow reported by plant 1066. This plant uses a floor washing machine, thereby achieving a lower wastewater discharge rate than facilities which do not use a floor washing machine. This rate is used as the basis for the BPT flow allowance because this water use and discharge rate is demonstrated and is achievable through the use of a floor washing machine.

There was no wastewater discharge allowance at proposal for this subdivision because the Agency did not have sufficient data at the time to quantify production normalized water use and discharge rates. These rates, which are based on data collected by the Agency since proposal, are presented in Table V-8 (page 4690).

LAUNDRY WASTEWATER

The BPT wastewater discharge rate at promulgation for laundry wastewater is 192 l/kkg of uranium produced by magnesium reduction. This rate is allocated to all plants which produce uranium metal by magnesium reduction of uranium tetrafluoride. This rate is based on one facility for which the Agency obtained sufficient data to calculate a production normalized flow.

There was no wastewater discharge allowance at proposal for this subdivision because the Agency did not have sufficient data at

the time to calculate production normalized water use and discharge rates. These rates, which are based on information collected by the Agency since proposal, are presented in Table V-9 (page 4690).

REGULATED POLLUTANT PARAMETERS

The raw wastewater concentrations from individual operations and the subcategory as a whole were examined to select certain pollutant parameters for limitation. This examination and evaluation was presented in Section VI. A total of seven pollutants or pollutant parameters are selected for limitation under BPT and are listed below:

119. chromium
120. copper
124. nickel
fluoride
TSS
pH

EFFLUENT LIMITATIONS

The treatable concentrations achievable by application of the promulgated BPT are discussed in Section VII of Vol. I and summarized there in Table VII-21 (page 248). These treatable concentrations (both one day maximum and monthly average values) are multiplied by the BPT normalized discharge flows summarized in Table IX-1 (page 4755) to calculate the mass of pollutants allowed to be discharged per mass of product. The results of these calculations in milligrams of pollutant per kilogram of product represent the BPT effluent limitations and are presented in Table IX-2 (page 4756) for each individual waste stream.

Table IX-1

BPT WASTEWATER DISCHARGE RATES FOR THE SECONDARY URANIUM SUBCATEGORY

Wastewater Stream	BPT Normalized Discharge Rate l/kkg	BPT Normalized Discharge Rate gal/ton	Production Normalizing Parameter
Refinery sump filtrate	73,340	17,580	Uranium processed in the refinery
Slag leach reslurry	4,566	1,094	Uranium processed in the refinery
Digestion wet air pollution control	0	0	Uranium processed in the refinery
Solvent extraction raffinate filtrate	6,369	1,526	Uranium processed in the refinery
Evaporation and denitration wet air pollution control	0	0	Uranium trioxide produced
Hydrofluorination water scrubber	0	0	Uranium tetrafluoride produced
Hydrofluorination alkaline scrubber	20	4.8	Uranium tetrafluoride produced
Magnesium reduction and casting floor wash	30.1	7.2	Uranium produced by magnesium reduction
Laundry wastewater	192	46.1	Uranium produced by magnesium reduction

TABLE IX-2

BPT MASS LIMITATIONS FOR THE SECONDARY URANIUM SUBCATEGORY

(a) Refinery Sump Filtrate BPT

Pollutant or pollutant property	Maximum for any one day	Maximum for monthly average
mg/kg (lb/million lbs) of uranium processed in the refinery		
Antimony	210.500	93.880
Arsenic	153.300	68.210
Cadmium	24.940	11.000
*Chromium	32.270	13.200
*Copper	139.300	73.340
Lead	30.800	14.670
*Nickel	140.800	93.140
Selenium	90.210	40.340
Silver	30.070	12.470
Zinc	107.100	44.740
*Fluoride	2,567.000	1,459.000
Uranium	476.700	346.900
*TSS	3,007.000	1,430.000
*pH Within the range of 7.5 to 10.0 at all times		

(b) Slag Leach Reslurry BPT

Pollutant or pollutant property	Maximum for any one day	Maximum for monthly average
mg/kg (lb/million lbs) of uranium processed in the refinery		
Antimony	13.100	5.844
Arsenic	9.543	4.246
Cadmium	1.552	0.685
*Chromium	2.009	0.822
*Copper	8.675	4.566
Lead	1.918	0.913
*Nickel	8.767	5.799
Selenium	5.616	2.511
Silver	1.872	0.776
Zinc	6.666	2.785
*Fluoride	159.800	90.860
Uranium	29.680	21.600
*TSS	187.200	89.040
*pH Within the range of 7.5 to 10.0 at all times		

*Regulated Pollutant

Table IX-2 (Continued)

BPT MASS LIMITATIONS FOR THE SECONDARY URANIUM SUBCATEGORY

(c) Solvent Extraction Raffinate Filtrate BPT

Pollutant or pollutant property	Maximum for any one day	Maximum for monthly average
mg/kg (lb/million lbs) of uranium processed in solvent extraction		
Antimony	18.280	8.152
Arsenic	13.310	5.923
Cadmium	2.165	0.955
*Chromium	2.802	1.146
*Copper	12.100	6.369
Lead	2.675	1.274
*Nickel	12.230	8.089
Selenium	7.834	3.503
Silver	2.611	1.083
Zinc	9.299	3.885
*Fluoride	222.900	126.700
Uranium	41.400	30.130
*TSS	261.100	124.200
*pH Within the range of 7.5 to 10.0 at all times		

(d) Digestion Operation Wet Air Pollution Control BPT

Pollutant or pollutant property	Maximum for any one day	Maximum for monthly average
mg/kg (lb/million lbs) of uranium processed in the refinery		
Antimony	0.000	0.000
Arsenic	0.000	0.000
Cadmium	0.000	0.000
*Chromium	0.000	0.000
*Copper	0.000	0.000
Lead	0.000	0.000
*Nickel	0.000	0.000
Selenium	0.000	0.000
Silver	0.000	0.000
Zinc	0.000	0.000
*Fluoride	0.000	0.000
Uranium	0.000	0.000
*TSS	0.000	0.000
*pH Within the range of 7.5 to 10.0 at all times		

*Regulated Pollutant

Table IX-2 (Continued)

BPT MASS LIMITATIONS FOR THE SECONDARY URANIUM SUBCATEGORY

(e) Evaporation and Denitration Wet Air Pollution Control BPT

Pollutant or pollutant property	Maximum for any one day	Maximum for monthly average
mg/kg (lb/million lbs) of uranium trioxide reduced		
Antimony	0.000	0.000
Arsenic	0.000	0.000
Cadmium	0.000	0.000
*Chromium	0.000	0.000
*Copper	0.000	0.000
Lead	0.000	0.000
*Nickel	0.000	0.000
Selenium	0.000	0.000
Silver	0.000	0.000
Zinc	0.000	0.000
*Fluoride	0.000	0.000
Uranium	0.000	0.000
*TSS	0.000	0.000
*pH Within the range of 7.5 to 10.0 at all times		

(f) Hydrofluorination KOH Scrubber BPT

Pollutant or pollutant property	Maximum for any one day	Maximum for monthly average
mg/kg (lb/million lbs) of uranium tetrafluoride produced		
Antimony	0.057	0.026
Arsenic	0.042	0.019
Cadmium	0.007	0.003
*Chromium	0.009	0.004
*Copper	0.038	0.020
Lead	0.008	0.004
*Nickel	0.038	0.025
Selenium	0.025	0.011
Silver	0.008	0.003
Zinc	0.029	0.012
*Fluoride	0.700	0.398
Uranium	0.130	0.095
*TSS	0.820	0.390
*pH Within the range of 7.5 to 10.0 at all times		

*Regulated Pollutant

TABLE IX-2 (Continued)

BPT MASS LIMITATIONS FOR THE SECONDARY URANIUM SUBCATEGORY

(g) Hydrofluorination Water Scrubber BPT

Pollutant or pollutant property	Maximum for any one day	Maximum for monthly average
mg/kg (lb/million lbs) of uranium tetrafluoride produced		
Antimony	0.000	0.000
Arsenic	0.000	0.000
Cadmium	0.000	0.000
*Chromium	0.000	0.000
*Copper	0.000	0.000
Lead	0.000	0.000
*Nickel	0.000	0.000
Selenium	0.000	0.000
Silver	0.000	0.000
Zinc	0.000	0.000
*Fluoride	0.000	0.000
Uranium	0.000	0.000
*TSS	0.000	0.000
*pH Within the range of 7.5 to 10.0 at all times		

(h) Reduction and Casting Floor Wash BPT

Pollutant or pollutant property	Maximum for any one day	Maximum for monthly average
mg/kg (lb/million lbs) of uranium produced by magnesium reduction		
Antimony	0.086	0.039
Arsenic	0.063	0.028
Cadmium	0.010	0.005
*Chromium	0.013	0.005
*Copper	0.057	0.030
Lead	0.013	0.006
*Nickel	0.058	0.038
Selenium	0.037	0.017
Silver	0.012	0.005
Zinc	0.044	0.018
*Fluoride	1.054	0.599
Uranium	0.196	0.142
*TSS	1.234	0.587
*pH Within the range of 7.5 to 10.0 at all times		

*Regulated Pollutant

TABLE IX-2 (Continued)

BPT MASS LIMITATIONS FOR THE SECONDARY URANIUM SUBCATEGORY

(i) Laundry Washwater BPT

Pollutant or pollutant property	Maximum for any one day	Maximum for monthly average
mg/kg (lb/million lbs) of uranium produced by magnesium reduction		
Antimony	0.551	0.246
Arsenic	0.401	0.179
Cadmium	0.065	0.029
*Chromium	0.085	0.035
*Copper	0.365	0.192
Lead	0.081	0.038
*Nickel	0.369	0.244
Selenium	0.236	0.106
Silver	0.079	0.033
Zinc	0.280	0.117
*Fluoride	6.720	3.821
Uranium	1.248	0.908
*TSS	7.872	3.744
*pH Within the range of 7.5 to 10.0 at all times		

*Regulated Pollutant

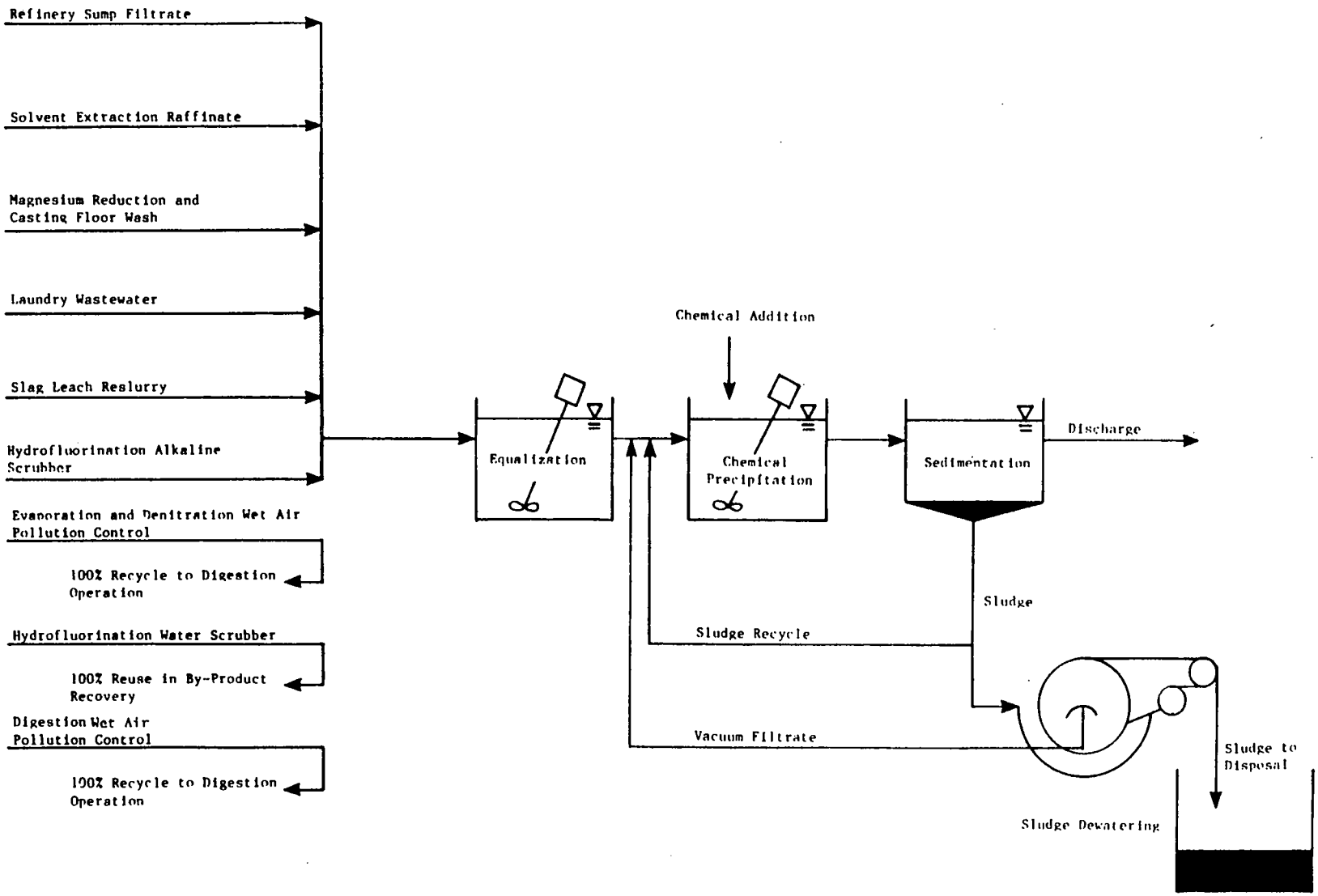

Figure IX-1

BPT TREATMENT SCHEME FOR THE SECONDARY URANIUM SUBCATEGORY

THIS PAGE INTENTIONALLY LEFT BLANK

SECTION X

BEST AVAILABLE TECHNOLOGY ECONOMICALLY ACHIEVABLE

These effluent limitations are based on the best control and treatment technology used by a specific point source within the industrial category or subcategory, or by another industry from which it is transferable. Emphasis is placed on additional treatment techniques applied at the end of the treatment systems currently used, as well as reduction of the amount of water used and discharged, process control, and treatment technology optimization.

The factors considered in assessing best available technology economically achievable (BAT) include the age of equipment and facilities involved, the process used, process changes, nonwater quality environmental impacts (including energy requirements), and the costs of application of such technology. BAT represents the best available technology economically achievable at plants of various ages, sizes, processes, or other characteristics. BAT may be transferred from a different subcategory or category. BAT may include feasible process changes or internal controls, even when not in common industry practice.

The statutory assessment of BAT considers costs, but does not require a balancing of costs against pollutant removals. However, in assessing the proposed and promulgated BAT, the Agency has given substantial weight to the economic achievability of the technology.

TECHNICAL APPROACH TO BAT

The Agency reviewed a wide range of technology options and evaluated the available possibilities to ensure that the most effective and beneficial technologies were used as the basis of BAT. To accomplish this, the Agency elected to examine two technology options which could be applied to the secondary uranium subcategory as alternatives for the basis of BAT effluent limitations.

For the development of BAT effluent limitations, mass loadings were calculated for each wastewater source or subdivision in the subcategory using the same technical approach as described in Section IX for BPT limitations development. The differences in the mass loadings for BPT and BAT are due to increased treatment effectiveness achievable with the more sophisticated BAT treatment technology.

The treatment technologies considered for BAT are summarized below:

Option A (Figure X-1, page 4777):

- o Chemical precipitation and sedimentation

Option C (Figure X-2, page 4778):

- o Chemical precipitation and sedimentation
- o Multimedia filtration

The two options examined for BAT are discussed in greater detail below. The first option considered (Option A) is the same as the BPT treatment and control technology which was presented in the previous section. The second option represents substantial progress toward the reduction of pollutant discharges above and beyond the progress achievable by BPT.

OPTION A

Option A for the secondary uranium subcategory is equivalent to the control and treatment technologies which were analyzed for BPT in Section IX (see Figures IX-1 or X-1, pages 4761 or 4777). The BPT end-of-pipe treatment scheme includes chemical precipitation and sedimentation. The discharge rates for Option A are equal to the discharge rates allocated to each stream as a BPT discharge flow.

OPTION C

Option C for the secondary uranium subcategory consists of all control and treatment requirements of Option A (chemical precipitation and sedimentation plus multimedia filtration technology added at the end of the Option A treatment scheme (see Figure X-2). Multimedia filtration is used to remove suspended solids, including precipitates of toxic metals, beyond the concentrations attainable by gravity sedimentation. The filter suggested is of the gravity, mixed media type, although other forms of filters, such as rapid sand filters or pressure filters, would perform satisfactorily.

INDUSTRY COST AND POLLUTANT REMOVAL ESTIMATES

As one means of evaluating each technology option, EPA developed estimates of the pollutant removals and the compliance costs associated with each option. The methodologies are described below.

POLLUTANT REMOVAL ESTIMATES

A complete description of the methodology used to calculate the estimated pollutant removal, or benefit, achieved by the application of the various treatment options is presented in Section X of the General Development Document. The pollutant removal estimates have been revised from proposal based on industry comments and new information; however, the methodology for calculating pollutant removals was not changed. The data

used for estimating removals are the same as those used to revise compliance costs.

Sampling data collected during the field sampling program were used to characterize the major waste streams considered for regulation. At each sampled facility, the sampling data were production normalized for each unit operation (i.e., mass of pollutant generated per mass of product manufactured). This value, referred to as the raw waste, was used to estimate the mass of pollutants generated within the secondary uranium subcategory. The pollutant removal estimates were calculated for each plant by first estimating the total mass of each pollutant in the untreated wastewater. This was calculated by first multiplying the raw waste values by the corresponding production value for that stream and then summing these values for each pollutant for every stream generated by the plant.

Next, the volume of wastewater discharged after the application of each treatment option was estimated for each operation at each plant by comparing the actual discharge to the regulatory flow. The smaller of the two values was selected and summed with the other plant flows. The mass of pollutant discharged was then estimated by multiplying the achievable concentration values attainable with the option (mg/l) by the estimated volume of process wastewater discharged by the subcategory. The mass of pollutant removed is the difference between the estimated mass of pollutant generated by each plant in the subcategory and the mass of pollutant discharged after application of the treatment option. The pollutant removal estimates for direct dischargers in the secondary uranium subcategory are presented in Table X-1 (page 4769).

COMPLIANCE COSTS

In estimating subcategory-wide compliance costs, the first step was to develop a cost estimation model, relating the total costs associated with installation and operation of wastewater treatment technologies to plant process wastewater discharge. EPA applied the model to each plant. The plant's investment and operating costs are determined by what treatment it has in place and by its individual process wastewater discharge flow. As discussed above, this flow is either the actual or the BAT regulatory flow, whichever is lesser. The final step was to annualized the capital costs, and to sum the annualized capital costs, and the operating and maintenance costs for each plant, yielding the cost of compliance for the subcategory. A comparison of the costs developed for proposal and the revised costs for promulgation is presented in Table X-2 (page 4778) for direct discharges in the secondary uranium subcategory. These costs were used in assessing economic achievability.

BAT OPTION SELECTION - PROPOSAL

EPA selected Option C for the proposed BAT which included pretreatment with ammonia steam stripping for selected waste

streams, followed by chemical precipitation, sedimentation, and multimedia filtration. The estimated capital cost of proposed BAT was $54,300, and the annual cost was $86,500 (1982 dollars). Implementation of the proposed BAT technology was estimated to remove 1,304 kilograms of priority pollutants and 1,951 kilograms of TSS annually.

BAT OPTION SELECTION - PROMULGATION

EPA is promulgating BAT limitations for the secondary uranium subcategory based on chemical precipitation, sedimentation, and multimedia filtration. The end-of-pipe technology basis for BAT limitations being promulgated is the same as that for the proposed limitations. In addition, the treatment performance concentrations, upon which the mass limitations are based, are equal to values used to calculate the proposed mass limitations. Ammonia steam stripping is no longer part of the model technology for BAT. Data collected after proposal indicated that ammonia is no longer used in secondary uranium processing. The treatment configuration for Option C is presented in Figure X-2 (page 4778).

EPA is promulgating multimedia filtration as part of the BAT technology because this technology is demonstrated by 25 plants in the nonferrous metals manufacturing category, and results in additional removal of priority metals. In addition, filtration adds reliability to the treatment system by making it less susceptible to operator error and to sudden changes in raw wastewater flow and concentrations.

Implementation of the control and treatment technologies of Option C will remove annually an estimated 126 kilograms of priority metal pollutants and 4,350 kilograms of nonconventional pollutants, which is 26 kilograms of priority metal pollutants over the estimated BPT removal. The estimated capital cost for achieving promulgated BAT is $88,000 and the estimated annual cost is $106.700 (1982 dollars).

WASTEWATER DISCHARGE RATES

A BAT discharge rate was calculated for each subdivision based upon the flows of the existing plants, as determined from analysis of the data collection portfolios. The discharge rate is used with the achievable treatment concentrations to determine BAT effluent limitations. Since the discharge rate may be different for each wastewater source, separate production normalized discharge rates for each of the seven wastewater sources were determined and are summarized in Table X-3 (page 4771). The discharge rates are normalized on a production basis by relating the amount of wastewater generated to the mass of the intermediate product which is produced by the process associated with the waste stream in question. These production normalizing parameters, or PNPs, are also listed in Table X-3.

The BAT wastewater discharge rates are the same as the BPT

discharge rates with the exception of the laundry wastewater flow. The BAT flow rate for laundry wastewater is 96 l/kkg of uranium produced by magnesium reduction. based on 50 percent recycle of the BPT flow using a holding tank and recycle equipment.

REGULATED POLLUTANT PARAMETERS

The raw wastewater concentrations from individual operations and the subcategory as a whole were examined to select certain pollutants and pollutant parameters for limitation. This examination and evaluation was presented in Section VI. The Agency, however, has chosen not to regulate all eight toxic pollutants selected in this analysis.

The high cost associated with analysis for toxic metal pollutants has prompted EPA to develop an alternative method for regulating and monitoring toxic pollutant discharges from the nonferrous metals manufacturing category. Rather than developing specific effluent mass limitations and standards for each of the toxic metals found in treatable concentrations in the raw wastewater from a given subcategory, the Agency is promulgating effluent mass limitations only for those pollutants generated in the greatest quantities as shown by the pollutant removal estimate analysis. The pollutants selected for specific limitation are listed below:

119. chromium
120. copper
124. nickel
fluoride

By establishing limitations and standards for certain priority metal pollutants, dischargers will attain the same degree of control over toxic metal pollutants as they would have been required to achieve had all the toxic metal pollutants been directly limited.

This approach is technically justified since the treatable concentrations used for chemical precipitation and sedimentation technology are based on optimized treatment for concomitant multiple metals removal. Thus, even though metals have somewhat different theoretical solubilities, they will be removed at very nearly the same rate in a chemical precipitation and sedimentation treatment system operated for multiple metals removal. Filtration as part of the technology basis is likewise justified because this technology removes metals non-preferentially.

The priority metal pollutants selected for specific limitation in the secondary uranium subcategory to control the discharges of toxic metal pollutants are chromium, copper, and nickel. The following toxic metal pollutants are excluded from limitation on the basis that they are effectively controlled by the limitations developed for chromium, copper, and nickel:

114. antimony
115. arsenic
118. cadmium
122. lead
125. selenium
126. silver
128. zinc

EFFLUENT LIMITATIONS

The concentrations achievable by application of BAT are discussed in Section VII of Vol. I and are summarized there in Table VII-21 (page 248). The achievable concentrations both one day maximum and monthly average values are multiplied by the BAT normalized discharge flows summarized in Table X-3 to calculate the mass of pollutants allowed to be discharged per mass of product. The results of these calculations in milligrams of pollutant per kilogram of product represent the promulgated BAT effluent limitations and are presented in Table X-4 (page 4772) for each waste stream.

Table X-1

POLLUTANT REMOVAL ESTIMATES FOR DIRECT DISCHARGERS

Pollutant	Total Raw Discharge (kg/yr)	Option A Discharge (kg/yr)	Option A Removed (kg/yr)	Option C Discharge (kg/yr)	Option C Removed (kg/yr)
Antimony	0.00	0.00	0.00	0.00	0.00
Arsenic	24.23	15.18	9.04	10.08	14.14
Cadmium	0.47	0.47	0.00	0.47	0.00
Chromium (Total)	7.41	2.50	4.91	2.07	5.33
Copper	34.91	17.26	17.65	11.57	23.34
Cyanide (Total)	0.00	0.00	0.00	0.00	0.00
Lead	10.80	3.57	7.23	2.37	8.43
Mercury	2.91	1.78	1.13	1.06	1.84
Nickel	13.57	13.57	0.00	6.52	7.04
Selenium	19.40	8.93	10.47	5.93	13.47
Silver	0.00	0.00	0.00	0.00	0.00
Thallium	0.00	0.00	0.00	0.00	0.00
Zinc	59.15	9.82	49.32	6.82	52.32
TOTAL PRIORITY POLLUTANTS	172.89	73.11	99.78	46.94	125.95
Aluminum	1,273.29	66.68	1,206.60	44.20	1,229.08
Ammonia	0.00	0.00	0.00	0.00	0.00
Cobalt	0.00	0.00	0.00	0.00	0.00
Uranium	314.87	119.07	195.80	78.32	236.55
Iron	2,700.78	12.20	2,688.57	8.30	2,692.47
Manganese	196.38	4.76	191.62	4.15	192.22
Phosphorus	0.00	0.00	0.00	0.00	0.00
TOTAL NONCONVENTIONALS	4,485.33	202.72	4,282.61	135.00	4,350.33
TSS	1,008.55	357.22	651.33	77.14	931.41
Oil and Grease	0.00	0.00	0.00	0.00	0.00
TOTAL CONVENTIONALS	1,088.55	357.22	651.33	77.14	931.41
TOTAL POLLUTANTS	5,666.79	633.05	5,033.73	259.08	5,407.71

TABLE X-2

COST OF COMPLIANCE FOR THE SECONDARY URANIUM SUBCATEGORY
DIRECT DISCHARGERS

(March 1982 Dollars)

	Proposal Cost		Promulgation Cost	
Option	Capital Cost	Annual Cost	Capital Cost	Annual Cost
A	28,600	73,600	54,800	90,400
C	54,300	86,500	88,000	106,700

Table X-3

BAT WASTEWATER DISCHARGE RATES FOR THE SECONDARY URANIUM SUBCATEGORY

Wastewater Stream	BAT Normalized Discharge Rate l/kkg	BAT Normalized Discharge Rate gal/ton	Production Normalizing Parameter
Refinery sump filtrate	73,340	17,580	Uranium processed in the refinery
Slag leach reslurry	4,566	1,094	Uranium processed in the refinery
Digestion wet air pollution control	0	0	Uranium processed in the refinery
Solvent extraction raffinate filtrate	6,369	1,526	Uranium processed in the refinery
Evaporation and denitration wet air pollution control	0	0	Uranium trioxide produced
Hydrofluorination water scrubber	0	0	Uranium tetrafluoride produced
Hydrofluorination alkaline scrubber	20	4.8	Uranium tetrafluoride produced
Magnesium reduction and casting floor wash	30.1	7.2	Uranium produced by magnesium reduction
Laundry wastewater	96	23	Uranium produced by magnesium reduction

TABLE X-4

BAT MASS LIMITATIONS FOR THE SECONDARY URANIUM SUBCATEGORY

(a) Refinery Sump Filtrate BAT

Pollutant or pollutant property	Maximum for any one day	Maximum for monthly average
mg/kg (lb/million lbs) of uranium processed in the refinery		
Antimony	141.500	63.070
Arsenic	101.900	45.470
Cadmium	14.670	5.867
*Chromium	27.140	11.000
*Copper	93.880	44.740
Lead	20.540	9.534
*Nickel	40.340	27.140
Selenium	60.140	27.140
Silver	21.270	8.801
Zinc	74.810	30.800
*Fluoride	2,567.000	1,459.000
Uranium	314.600	228.800

(b) Slag Leach Reslurry BAT

Pollutant or pollutant property	Maximum for any one day	Maximum for monthly average
mg/kg (lb/million lbs) of uranium processed in the refinery		
Antimony	8.812	3.927
Arsenic	6.347	2.831
Cadmium	.913	.365
*Chromium	1.689	.685
*Copper	5.844	2.785
Lead	1.278	.594
*Nickel	2.511	1.689
Selenium	3.744	1.689
Silver	1.324	.548
Zinc	4.657	1.918
*Fluoride	159.800	90.860
Uranium	19.590	14.250

*Regulated Pollutant

TABLE X-4 (Continued)

BAT MASS LIMITATIONS FOR THE SECONDARY URANIUM SUBCATEGORY

(c) Solvent Extraction Raffinate Filtrate BAT

Pollutant or pollutant property	Maximum for any one day	Maximum for monthly average
mg/kg (lb/million lbs) of uranium processed in solvent extraction		
Antimony	12.290	5.477
Arsenic	8.853	3.949
Cadmium	1.274	0.510
*Chromium	2.357	0.955
*Copper	8.152	3.885
Lead	1.783	0.828
*Nickel	3.503	2.357
Selenium	5.223	2.357
Silver	1.847	0.764
Zinc	6.496	2.675
*Fluoride	222.900	126.700
Uranium	27.320	19.870

(d) Digestion Operation Wet Air Pollution Control BAT

Pollutant or pollutant property	Maximum for any one day	Maximum for monthly average
mg/kg (lb/million lbs) of uranium processed in the refinery		
Antimony	0.000	0.000
Arsenic	0.000	0.000
Cadmium	0.000	0.000
*Chromium	0.000	0.000
*Copper	0.000	0.000
Lead	0.000	0.000
*Nickel	0.000	0.000
Selenium	0.000	0.000
Silver	0.000	0.000
Zinc	0.000	0.000
*Fluoride	0.000	0.000
Uranium	0.000	0.000

*Regulated Pollutant

TABLE- X-4 (Continued)

BAT MASS LIMITATIONS FOR THE SECONDARY URANIUM SUBCATEGORY

(e) Evaporation and Denitration Wet Air Pollution Control BAT

Pollutant or pollutant property	Maximum for any one day	Maximum for monthly average
mg/kg (lb/million lbs) of uranium trioxide produced		
Antimony	0.000	0.000
Arsenic	0.000	0.000
Cadmium	0.000	0.000
*Chromium	0.000	0.000
*Copper	0.000	0.000
Lead	0.000	0.000
*Nickel	0.000	0.000
Selenium	0.000	0.000
Silver	0.000	0.000
Zinc	0.000	0.000
*Fluoride	0.000	0.000
Uranium	0.000	0.000

(f) Hydrofluorination KOH Scrubber BAT

Pollutant or pollutant property	Maximum for any one day	Maximum for monthly average
mg/kg (lb/million lbs) of uranium tetrafluoride produced		
Antimony	0.039	0.017
Arsenic	0.028	0.012
Cadmium	0.004	0.002
*Chromium	0.007	0.003
*Copper	0.026	0.012
Lead	0.006	0.003
*Nickel	0.011	0.007
Selenium	0.016	0.007
Silver	0.006	0.002
Zinc	0.020	0.008
*Fluoride	0.700	0.398
Uranium	0.086	0.062

*Regulated Pollutant

Table X-4 (Continued)

BAT MASS LIMITATIONS FOR THE
SECONDARY URANIUM SUBCATEGORY

(g) Hydrofluorination Water Scrubber BAT

Pollutant or pollutant property	Maximum for any one day	Maximum for monthly average
mg/kg (lb/million lbs) of uranium tetrafluoride produced		
Antimony	0.000	0.000
Arsenic	0.000	0.000
Cadmium	0.000	0.000
*Chromium	0.000	0.000
*Copper	0.000	0.000
Lead	0.000	0.000
*Nickel	0.000	0.000
Selenium	0.000	0.000
Silver	0.000	0.000
Zinc	0.000	0.000
*Fluoride	0.000	0.000
Uranium	0.000	0.000

(h) Reduction and Casting Floor Wash BAT

Pollutant or pollutant property	Maximum for any one day	Maximum for monthly average
mg/kg (lb/million lbs) of uranium produced by magnesium reduction		
Antimony	0.058	0.026
Arsenic	0.042	0.019
Cadmium	0.006	0.002
*Chromium	0.011	0.005
*Copper	0.039	0.018
Lead	0.008	0.004
*Nickel	0.017	0.011
Selenium	0.025	0.011
Silver	0.009	0.004
Zinc	0.031	0.013
*Fluoride	1.054	0.599
Uranium	0.129	0.094

*Regulated Pollutant

TABLE-4 (Continued)

BAT MASS LIMITATIONS FOR THE SECONDARY URANIUM SUBCATEGORY

(i) Laundry Washwater BAT

Pollutant or pollutant property	Maximum for any one day	Maximum for monthly average
mg/kg (lb/million lbs) of uranium produced by magnesium reduction		
Antimony	0.185	0.083
Arsenic	0.133	0.060
Cadmium	0.019	0.008
*Chromium	0.036	0.014
*Copper	0.123	0.059
Lead	0.027	0.013
*Nickel	0.053	0.036
Selenium	0.079	0.036
Silver	0.028	0.012
Zinc	0.098	0.040
*Fluoride	3.360	1.910
Uranium	0.412	0.300

*Regulated Pollutant

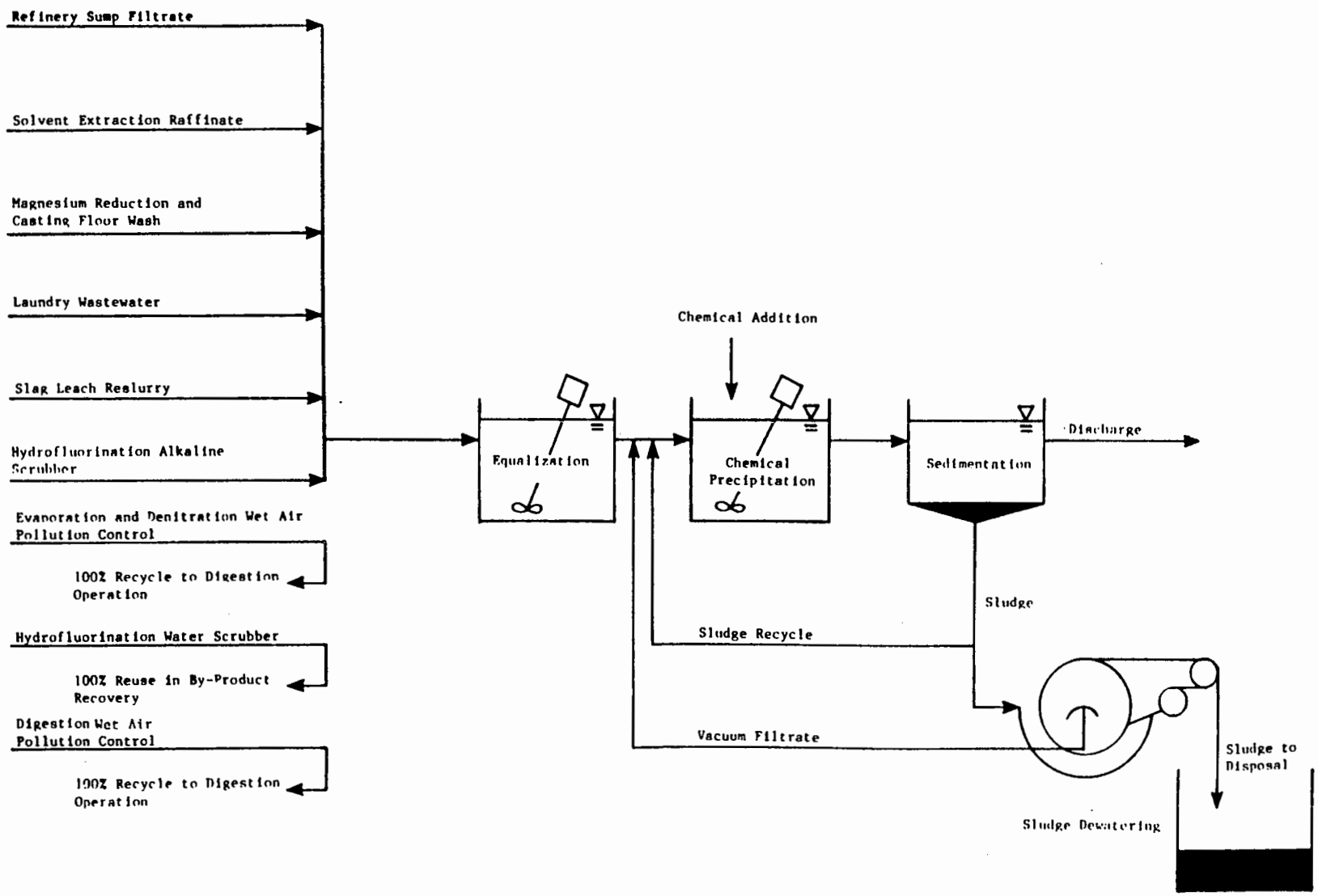

Figure X-1

BAT TREATMENT SCHEME FOR OPTION A

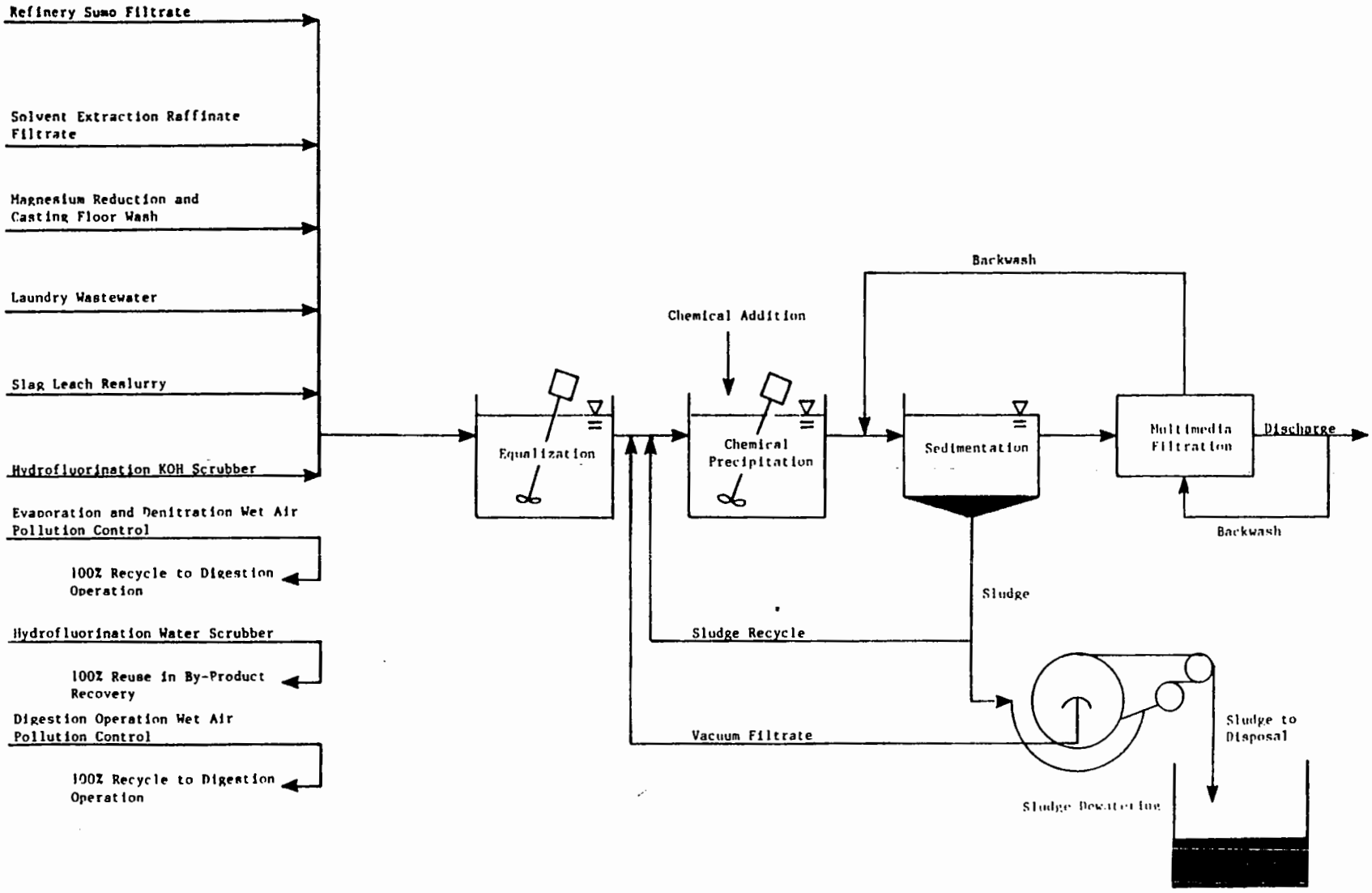

Figure X-2

BAT TREATMENT SCHEME FOR OPTION C

SECTION XI

NEW SOURCE PERFORMANCE STANDARDS

This section describes the technologies for treatment of wastewater from new sources and presents mass discharge standards for regulatory pollutants for NSPS in the secondary uranium subcategory, based on the selected treatment technology. New plants have the opportunity to design the best and most efficient production processes and wastewater treatment technologies without facing the added costs and restrictions encountered in retrofitting an existing plant. Therefore, EPA has considered the best demonstrated process changes, in-plant controls, and end-of-pipe treatment technologies which reduce pollution to the maximum extent feasible.

TECHNICAL APPROACH TO NSPS

New source performance standards are equivalent to the best available technology (BAT) selected for currently existing secondary uranium plants. This result is a consequence of careful review by the Agency of a wide range of technical options for new source treatment systems which is discussed in Section XI of the General Development Document. Additionally, there was nothing found to indicate that the wastewater flows and characteristics of new plants would not be similar to those from existing plants, since the processes used by new sources are not expected to differ from those used at existing sources. Consequently, BAT production normalized discharge rates, which are based on the best existing practices of the subcategory, can also be applied to new sources. These rates are presented in Table X-3 (page 4771).

Treatment technologies considered for the NSPS options are identical to the treatment technologies considered for the BAT options. These options are:

OPTION A

- Chemical precipitation and sedimentation

OPTION C

- Chemical precipitation and sedimentation
- Multimedia filtration

NSPS OPTION SELECTION - PROPOSAL

EPA proposed that the best available demonstrated technology for the secondary uranium subcategory be equivalent to Option C (chemical precipitation, sedimentation, and multimedia filtration with ammonia steam stripping for selected streams).

The wastewater flow rates proposed for NSPS were the same as those proposed for BAT. Flow reduction measures for NSPS and BAT were not considered feasible because EPA believed that no new demonstrated technologies existed within the subcategory that improved on present water use practices. Therefore, EPA concluded that NSPS flow rates should be equal to those of BPT and BAT.

NSPS OPTION SELECTION - PROMULGATION

EPA is promulgating best available demonstrated technology for the secondary uranium subcategory equivalent to Option C (chemical precipitation, sedimentation, and multimedia filtration). Filtration technology is demonstrated in 25 plants in the nonferrous metals manufacturing category.

The promulgated wastewater flow rates for NSPS are the same as the promulgated BAT flow rates. Flow reduction measures for NSPS are not considered feasible. EPA does not believe that new plants could achieve any additional flow reduction beyond the 90 to 100 percent scrubber effluent recycle presently practiced in the industry.

REGULATED POLLUTANT PARAMETERS

The Agency has no reason to believe that the pollutants that will be found in treatable concentrations in processes within new sources will be any different than with existing sources. Accordingly, pollutants and pollutant parameters selected for limitation under NSPS, in accordance with the rationale of Sections VI and X, are identical to those selected for BAT. The conventional pollutant parameters TSS and pH are also selected for limitation.

NEW SOURCE PERFORMANCE STANDARDS

The NSPS discharge flows for each wastewater source are the same as the discharge rates for BAT and are shown in Table XI-1 (page 4781). The mass of pollutant allowed to be discharged per mass of product is based on the product of the appropriate achievable concentration (mg/l) and the production normalized wastewater discharge flows (l/kkg). The results of these calculations are the production-based new source performance standards. These standards are presented in Table XI-2 (page 4782).

Table XI-1

NSPS WASTEWATER DISCHARGE RATES FOR THE SECONDARY URANIUM SUBCATEGORY

Wastewater Stream	NSPS Normalized Discharge Rate l/kkg	NSPS Normalized Discharge Rate gal/ton	Production Normalizing Parameter
Refinery sump filtrate	73,340	17,580	Uranium processed in the refinery
Slag leach reslurry	4,566	1,094	Uranium processed in the refinery
Digestion wet air pollution control	0	0	Uranium processed in the refinery
Solvent extraction raffinate filtrate	6,369	1,526	Uranium processed in the refinery
Evaporation and denitration wet air pollution control	0	0	Uranium trioxide produced
Hydrofluorination water scrubber	0	0	Uranium tetrafluoride produced
Hydrofluorination alkaline scrubber	20	4.8	Uranium tetrafluoride produced
Magnesium reduction and casting floor wash	30.1	7.2	Uranium produced by magnesium reduction
Laundry wastewater	96	23	Uranium produced by magnesium reduction

TABLE XI-2

NSPS FOR THE SECONDARY URANIUM SUBCATEGORY

(a) Refinery Sump Filtrate NSPS

Pollutant or pollutant property	Maximum for any one day	Maximum for monthly average
mg/kg (lb/million lbs) of uranium processed in the refinery		
Antimony	141.500	63.070
Arsenic	101.900	45.470
Cadmium	14.670	5.867
*Chromium	27.140	11.000
*Copper	93.880	44.740
*Lead	20.540	9.534
*Nickel	40.340	27.140
Selenium	60.140	27.140
Silver	21.270	8.801
Zinc	74.810	30.800
*Fluoride	2,567.000	1,459.000
Uranium	314.600	228.800
*TSS	1,100.000	880.100
*pH Within the range of 7.5 to 10.0 at all times		

(b) Slag Leach Reslurry NSPS

Pollutant or pollutant property	Maximum for any one day	Maximum for monthly average
mg/kg (lb/million lbs) of uranium processed in the refinery		
Antimony	8.812	3.927
Arsenic	6.347	2.831
Cadmium	.913	.365
*Chromium	1.689	.685
*Copper	5.844	2.785
Lead	1.278	.594
*Nickel	2.511	1.689
Selenium	3.744	1.689
Silver	1.324	.548
Zinc	4.657	1.918
*Fluoride	159.800	90.860
Uranium	19.590	14.250
*TSS	68.490	54.790
*pH Within the range of 7.5 to 10.0 at all times		

*Regulated Pollutant

TABLE XI-2 (Continued)

NSPS FOR THE SECONDARY URANIUM SUBCATEGORY

(c) Solvent Extraction Raffinate Filtrate NSPS

Pollutant or pollutant property	Maximum for any one day	Maximum for monthly average
mg/kg (lb/million lbs) of uranium processed in solvent extraction		
Antimony	12.290	5.477
Arsenic	8.853	3.949
Cadmium	1.274	0.510
*Chromium	2.357	0.955
*Copper	8.152	3.885
Lead	1.783	0.828
*Nickel	3.503	2.357
Selenium	5.223	2.357
Silver	1.847	0.764
Zinc	6.496	2.675
*Fluoride	222.900	126.700
Uranium	27.320	19.870
*TSS	95.540	76.430
*pH Within the range of 7.5 to 10.0 at all times		

(d) Digestion Operation Wet Air Pollution Control NSPS

Pollutant or pollutant property	Maximum for any one day	Maximum for monthly average
mg/kg (lb/million lbs) of uranium processed in the refinery		
Antimony	0.000	0.000
Arsenic	0.000	0.000
Cadmium	0.000	0.000
*Chromium	0.000	0.000
*Copper	0.000	0.000
Lead	0.000	0.000
*Nickel	0.000	0.000
Selenium	0.000	0.000
Silver	0.000	0.000
Zinc	0.000	0.000
*Fluoride	0.000	0.000
Uranium	0.000	0.000
*TSS	0.000	0.000
*pH Within the range of 7.5 to 10.0 at all times		

*Regulated Pollutant

TABLE XI-2 (Continued)

NSPS FOR THE SECONDARY URANIUM SUBCATEGORY

(e) Evaporation and Denitration Wet Air Pollution Control NSPS

Pollutant or pollutant property	Maximum for any one day	Maximum for monthly average
mg/kg (lb/million lbs) of uranium trioxide produced		
Antimony	0.000	0.000
Arsenic	0.000	0.000
Cadmium	0.000	0.000
*Chromium	0.000	0.000
*Copper	0.000	0.000
Lead	0.000	0.000
*Nickel	0.000	0.000
Selenium	0.000	0.000
Silver	0.000	0.000
Zinc	0.000	0.000
*Fluoride	0.000	0.000
Uranium	0.000	0.000
*TSS	0.000	0.000
*pH Within the range of 7.5 to 10.0 at all times		

(f) Hydrofluorination KOH Scrubber NSPS

Pollutant or pollutant property	Maximum for any one day	Maximum for monthly average
mg/kg (lb/million lbs) of uranium tetrafluoride produced		
Antimony	0.039	0.017
Arsenic	0.028	0.012
Cadmium	0.004	0.002
*Chromium	0.007	0.003
*Copper	0.026	0.012
Lead	0.006	0.003
*Nickel	0.011	0.007
Selenium	0.016	0.007
Silver	0.006	0.002
Zinc	0.020	0.008
*Fluoride	0.700	0.398
Uranium	0.086	0.062
*TSS	0.300	0.240
*pH Within the range of 7.5 to 10.0 at all times		

*Regulated Pollutant

TABLE XI-2 (Continued)

NSPS FOR THE SECONDARY URANIUM SUBCATEGORY

(g) Hydrofluorination Water Scrubber NSPS

Pollutant or pollutant property	Maximum for any one day	Maximum for monthly average
mg/kg (lb/million lbs) of uranium tetrafluoride produced		
Antimony	0.000	0.000
Arsenic	0.000	0.000
Cadmium	0.000	0.000
*Chromium	0.000	0.000
*Copper	0.000	0.000
Lead	0.000	0.000
*Nickel	0.000	0.000
Selenium	0.000	0.000
Silver	0.000	0.000
Zinc	0.000	0.000
*Fluoride	0.000	0.000
Uranium	0.000	0.000
*TSS	0.000	0.000
*pH Within the range of 7.5 to 10.0 at all times		

(h) Reduction and Casting Floor Wash NSPS

Pollutant or pollutant property	Maximum for any one day	Maximum for monthly average
mg/kg (lb/million lbs) of uranium produced by magnesium reduction		
Antimony	0.058	0.026
Arsenic	0.042	0.019
Cadmium	0.006	0.002
*Chromium	0.011	0.005
*Copper	0.039	0.018
Lead	0.008	0.004
*Nickel	0.017	0.011
Selenium	0.025	0.011
Silver	0.009	0.004
Zinc	0.031	0.013
*Fluoride	1.054	0.599
Uranium	0.129	0.094
*TSS	0.452	0.361
*pH Within the range of 7.5 to 10.0 at all times		

*Regulated Pollutant

TABLE XI- (Continued)

NSPS FOR THE SECONDARY URANIUM SUBCATEGORY

(i) Laundry Washwater NSPS

Pollutant or pollutant property	Maximum for any one day	Maximum for monthly average
mg/kg (lb/million lbs) of uranium produced by magnesium reduction		
Antimony	0.185	0.083
Arsenic	0.133	0.060
Cadmium	0.019	0.008
*Chromium	0.036	0.014
*Copper	0.123	0.059
Lead	0.027	0.013
*Nickel	0.053	0.036
Selenium	0.079	0.036
Silver	0.028	0.012
Zinc	0.098	0.040
*Fluoride	3.360	1.910
Uranium	0.412	0.300
*TSS	1.440	1.152
*pH Within the range of 7.5 to 10.0 at all times		

*Regulated Pollutant

SECTION XII

PRETREATMENT STANDARDS

This section describes the control and treatment technologies for pretreatment of process wastewaters from new sources in the secondary uranium subcategory. PSES are designed to prevent the discharge of pollutants which pass through, interfere with, or are otherwise incompatible with the operation of publicly owned treatment works (POTW). The Clean Water Act requires pretreatment for pollutants, such as toxic metals, that limit POTW sludge management alternatives. New indirect discharge facilities, like new direct discharge facilities, have the opportunity to incorporate the best available demonstrated technologies, including process changes, in-plant controls, and end-of-pipe treatment technologies, and to use plant site selection to ensure adequate treatment system installation. Pretreatment standards are to be technology based, analogous to the best available or best demonstrated technology for removal of toxic pollutants.

Pretreatment standards for existing sources (PSES) will not be promulgated for the secondary uranium subcategory because there are no existing indirect dischargers in this subcategory. However, pretreatment standards for new sources (PSNS) will be promulgated. Pretreatment standards for regulated pollutants are presented based on the selected control and treatment technology.

TECHNICAL APPROACH TO PRETREATMENT

Before proposing and promulgating pretreatment standards, the Agency examines whether the pollutants discharged by the industry pass through the POTW or interfere with the POTW operation or its chosen sludge disposal practices. In determining whether pollutants pass through a well-operated POTW achieving secondary treatment, the Agency compares the percentage of a pollutant removed by POTW with the percentage removed by direct dischargers applying the best available technology economically achievable. A pollutant is deemed to pass through the POTW when the average percentage removed nationwide by well-operated POTW meeting secondary treatment requirements, is less than the percentage removed by direct dischargers complying with BAT effluent limitations guidelines for that pollutant.

This definition of pass through satisfies the two competing objectives set by Congress that standards for indirect dischargers be equivalent to standards for direct dischargers while at the same time the treatment capability and performance of the POTW be recognized and taken into account in regulating the discharge of pollutants from indirect dischargers.

The Agency compares percentage removal rather than the mass or concentration of pollutants discharged because the latter would

not take into account the mass of pollutants discharged to the POTW from non-industrial sources or the dilution of the pollutants in the POTW effluent to lower concentrations due to the addition of large amounts of non-industrial wastewater.

PRETREATMENT STANDARDS FOR NEW SOURCES

Options for pretreatment of wastewaters from new sources are based on increasing the effectiveness of end-of- pipe treatment technologies. All in-plant changes and applicable end-of-pipe treatment processes have been discussed previously in Sections X and XI. The options for PSNS, therefore, are the same as the BAT options discussed in Section X. A description of each option is presented in Section X.

Treatment technologies considered for the PSNS options are:

OPTION A

- o Chemical precipitation and sedimentation

OPTION C

- o Chemical precipitation and sedimentation
- o Multimedia filtration

PSNS OPTION SELECTION

Option C (chemical precipitation, sedimentation, and multimedia filtration) has been selected as the regulatory approach for pretreatment standards for new sources. The basis of this selection is in accordance with the rationale for selection of the BAT option in Section X. Option C prevents pass-through and is equivalent to BAT treatment for direct dischargers. In addition, Option C achieves effective removal of priority pollutants by incorporating filtration which is demonstrated by 25 plants throughout the nonferrous metals manufacturing category.

The wastewater discharge rates for promulgated PSNS are identical to the promulgated BAT discharge rates for each waste stream. The PSNS discharge rates are shown in Table XII-1 (page 4790). No additional flow reduction measures for PSNS are feasible. EPA does not believe that new plants should achieve flow reduction beyond the 90 to 100 percent scrubber effluent recycle presently practiced in the industry.

REGULATED POLLUTANT PARAMETERS

Pollutants selected for limitation, in accordance with the rationale of Sections VI and X, are identical to those selected for limitation for BAT. It is necessary to promulgate PSNS to prevent the pass-through of chromium, copper, nickel, and fluoride, which are the limited pollutants.

PRETREATMENT STANDARDS FOR NEW SOURCES

Pretreatment standards for new sources are based on the achievable concentrations from the selected treatment technology, (Option C), and the discharge rates determined in Section X for BAT. A mass of pollutant per mass of product (mg/kg) allocation is given for each subdivision within the subcategory. This pollutant allocation is based on the product of the treatable concentration from the promulgated treatment (mg/l) and the production normalized wastewater discharge rate (l/kkg). The achievable treatment concentrations for BAT are identical to those for PSNS. PSNS are presented in Table XII-2 (page 4791).

Table XII-1

PSNS WASTEWATER DISCHARGE RATES FOR THE SECONDARY URANIUM SUBCATEGORY

Wastewater Stream	PSNS Normalized Discharge Rate l/kkg	PSNS Normalized Discharge Rate gal/ton	Production Normalizing Parameter
Refinery sump filtrate	73,340	17,580	Uranium processed in the refinery
Slag leach reslurry	4,566	1,094	Uranium processed in the refinery
Digestion wet air pollution control	0	0	Uranium processed in the refinery
Solvent extraction raffinate filtrate	6,369	1,526	Uranium processed in the refinery
Evaporation and denitration wet air pollution control	0	0	Uranium trioxide produced
Hydrofluorination water scrubber	0	0	Uranium tetrafluoride produced
Hydrofluorination alkaline scrubber	20	4.8	Uranium tetrafluoride produced
Magnesium reduction and casting floor wash	30.1	7.2	Uranium produced by magnesium reduction
Laundry wastewater	96	23	Uranium produced by magnesium reduction

TABLE XII-2

PSNS FOR THE SECONDARY URANIUM SUBCATEGORY

(a) Refinery Sump Filtrate PSNS

Pollutant or pollutant property	Maximum for any one day	Maximum for monthly average
mg/kg (lb/million lbs) of uranium processed in the refinery		
Antimony	141.500	63.070
Arsenic	101.900	45.470
Cadmium	14.670	5.867
*Chromium	27.140	11.000
*Copper	93.880	44.740
Lead	20.540	9.534
*Nickel	40.340	27.140
Selenium	60.140	27.140
Silver	21.270	8.801
Zinc	74.810	30.800
*Fluoride	2,567.000	1,459.000
Uranium	314.600	228.800

(b) Slag Leach Reslurry PSNS

Pollutant or pollutant property	Maximum for any one day	Maximum for monthly average
mg/kg (lb/million lbs) of uranium processed in the refinery		
Antimony	8.812	3.927
Arsenic	6.347	2.831
Cadmium	0.913	0.365
*Chromium	1.689	0.685
*Copper	5.844	2.785
Lead	1.278	0.594
*Nickel	2.511	1.689
Selenium	3.744	1.689
Silver	1.324	0.548
Zinc	4.657	1.918
*Fluoride	159.800	90.860
Uranium	19.590	14.250

*Regulated Pollutant

TABLE XII-2 (Continued)

PSNS FOR THE SECONDARY URANIUM SUBCATEGORY

(c) Solvent Extraction Raffinate Filtrate PSNS

Pollutant or pollutant property	Maximum for any one day	Maximum for monthly average
mg/kg (lb/million lbs) of uranium processed in solvent extraction		
Antimony	12.290	5.477
Arsenic	8.853	3.949
Cadmium	1.274	0.510
*Chromium	2.357	0.955
*Copper	8.152	3.885
Lead	1.783	0.828
*Nickel	3.503	2.357
Selenium	5.223	2.357
Silver	1.847	0.764
Zinc	6.496	2.675
*Fluoride	222.900	126.700
Uranium	27.320	19.870

(d) Digestion Operation Wet Air Pollution Control PSNS

Pollutant or pollutant property	Maximum for any one day	Maximum for monthly average
mg/kg (lb/million lbs) of uranium processed in the refinery		
Antimony	0.000	0.000
Arsenic	0.000	0.000
Cadmium	0.000	0.000
*Chromium	0.000	0.000
*Copper	0.000	0.000
Lead	0.000	0.000
*Nickel	0.000	0.000
Selenium	0.000	0.000
Silver	0.000	0.000
Zinc	0.000	0.000
*Fluoride	0.000	0.000
Uranium	0.000	0.000

*Regulated Pollutant

TABLE XII-2 (Continued)

PSNS FOR THE SECONDARY URANIUM SUBCATEGORY

(e) Evaporation and Denitration Wet Air Pollution Control PSNS

Pollutant or pollutant property	Maximum for any one day	Maximum for monthly average
mg/kg (lb/million lbs) of uranium trioxide produced		
Antimony	0.000	0.000
Arsenic	0.000	0.000
Cadmium	0.000	0.000
*Chromium	0.000	0.000
*Copper	0.000	0.000
Lead	0.000	0.000
*Nickel	0.000	0.000
Selenium	0.000	0.000
Silver	0.000	0.000
Zinc	0.000	0.000
*Fluoride	0.000	0.000
Uranium	0.000	0.000

(f) Hydrofluorination KOH Scrubber PSNS

Pollutant or pollutant property	Maximum for any one day	Maximum for monthly average
mg/kg (lb/million lbs) of uranium tetrafluoride produced		
Antimony	0.039	0.017
Arsenic	0.028	0.012
Cadmium	0.004	0.002
*Chromium	0.007	0.003
*Copper	0.026	0.012
Lead	0.006	0.003
*Nickel	0.011	0.007
Selenium	0.016	0.007
Silver	0.006	0.002
Zinc	0.020	0.008
*Fluoride	0.700	0.398
Uranium	0.086	0.062

*Regulated Pollutant

Table XII-2 (Continued)

PSNS FOR THE SECONDARY URANIUM SUBCATEGORY

(g) Hydrofluorination Water Scrubber PSNS

Pollutant or pollutant property	Maximum for any one day	Maximum for monthly average
mg/kg (lb/million lbs) of uranium tetrafluoride produced		
Antimony	0.000	0.000
Arsenic	0.000	0.000
Cadmium	0.000	0.000
*Chromium	0.000	0.000
*Copper	0.000	0.000
Lead	0.000	0.000
*Nickel	0.000	0.000
Selenium	0.000	0.000
Silver	0.000	0.000
Zinc	0.000	0.000
*Fluoride	0.000	0.000
Uranium	0.000	0.000

(h) Reduction and Casting Floor Wash PSNS

Pollutant or pollutant property	Maximum for any one day	Maximum for monthly average
mg/kg (lb/million lbs) of uranium produced by magnesium reduction		
Antimony	0.058	0.026
Arsenic	0.042	0.019
Cadmium	0.006	0.002
*Chromium	0.011	0.005
*Copper	0.039	0.018
Lead	0.008	0.004
*Nickel	0.017	0.011
Selenium	0.025	0.011
Silver	0.009	0.004
Zinc	0.031	0.013
*Fluoride	1.054	0.599
Uranium	0.129	0.094

*Regulated Pollutant

Table XII-2 (Continued)

PSNS FOR THE SECONDARY URANIUM SUBCATEGORY

(i) Laundry Washwater PSNS

Pollutant or pollutant property	Maximum for any one day	Maximum for monthly average
mg/kg (lb/million lbs) of uranium produced by magnesium reduction		
Antimony	0.185	0.083
Arsenic	0.133	0.060
Cadmium	0.019	0.008
*Chromium	0.036	0.014
*Copper	0.123	0.059
Lead	0.027	0.013
*Nickel	0.053	0.036
Selenium	0.079	0.036
Silver	0.028	0.012
Zinc	0.098	0.040
*Fluoride	3.360	1.910
Uranium	0.412	0.300

*Regulated Pollutant

SECTION XIII

BEST CONVENTIONAL POLLUTANT CONTROL TECHNOLOGY

EPA is not promulgating best conventional pollutant control technology (BCT) for the secondary uranium subcategory at this time.

THIS PAGE INTENTIONALLY LEFT BLANK