DEVELOPMENT DOCUMENT

for

EFFLUENT LIMITATIONS GUIDELINES AND STANDARDS

for the

NONFERROUS METALS MANUFACTURING POINT SOURCE CATEGORY

VOLUME IV

Primary Zinc
Primary Lead
Secondary Lead
Primary Antimony

William K. Reilly
Administrator

Rebecca Hanmer, Acting
Assistant Administrator for Water

Martha Prothro, Director
Office of Water Regulations and Standards

Thomas P. O'Farrell, Director
Industrial Technology Division

Ernst P. Hall, P.E., Chief
Metals Industry Branch
and
Technical Project Officer

May 1989

U.S. Environmental Protection Agency
Office of Water
Office of Water Regulations and Standards
Industrial Technology Division
Washington, D. C. 20460

Page Intentionally Blank

ORGANIZATION OF THIS DOCUMENT

This development document for the nonferrous metals manufacturing category consists of a general development document which considers the general and overall aspects of the regulation and 31 subcategory specific supplements. These parts are organized into 10 volumes as listed below.

The information in the general document and in the supplements is organized by sections with the same type of information reported in the same section of each part. Hence to find information on any specific aspect of the category one would need only look in the same section of the general document and the specific supplements of interest.

The ten volumes contain contain the following subjects:

Volume I	General Development Document
Volume II	Bauxite Refining Primary Aluminum Smelting Secondary Aluminum Smelting
Volume III	Primary Copper Smelting Primary Electrolytic Copper Refining Secondary Copper Refining Metallurgical Acid Plants
Volume IV	Primary Zinc Primary Lead Secondary Lead Primary Antimony
Volume V	Primary Precious Metals and Mercury Secondary Precious Metals Secondary Silver Secondary Mercury
Volume VI	Primary Tungsten Secondary Tungsten and Cobalt Primary Molybdenum and Rhenium Secondary Molybdenum and Vanadium
Volume VII	Primary Beryllium Primary Nickel and Cobalt Secondary Nickel Secondary Tin
Volume VIII	Primary Columbium and Tantalum Secondary Tantalum Secondary Uranium
Volume IX	Primary and Secondary Titanium Primary Zirconium and Hafnium
Volume X	Primary and Secondary Germanium and Gallium Primary Rare Earth Metals Secondary Indium

Page Intentionally Blank

TABLE OF CONTENTS

Supplement	Page
Primary Zinc	1449
Primary Lead	1657
Secondary Lead	1825
Primary Antimony	2045

For detailed contents see detailed contents list in individual supplement.

Page Intentionally Blank

NONFERROUS METALS MANUFACTURING POINT SOURCE CATEGORY

DEVELOPMENT DOCUMENT SUPPLEMENT

for the

Primary Zinc Subcategory

Lee M. Thomas
Administrator

Rebecca Hanmer, Acting
Assistant Administrator for Water

Martha Prothro, Director
Office of Water Regulations and Standards

Thomas P. O'Farrell, Acting Director
Industrial Technology Division

Ernst P. Hall, P.E., Chief
Metals Industry Branch
and
Technical Project Officer

December 1988

U.S. Environmental Protection Agency
Office of Water
Office of Water Regulations and Standards
Industrial Technology Division
Washington, D. C. 20460

Page Intentionally Blank

PRIMARY ZINC SUBCATEGORY

TABLE OF CONTENTS

Section		Page
I	SUMMARY	1461
II	CONCLUSIONS	1463
III	INDUSTRY PROFILE	1479
	Description of Primary Zinc Production	1479
	Raw Materials	1480
	Electrolytic Zinc Production	1480
	Pyrolytic Zinc Production	1481
	Cadmium Production	1483
	Process Wastewater Sources	1484
	Other Wastewater Sources	1484
	Age, Production, and Process Profile	1485
IV	SUBCATEGORIZATION	1495
	Factors Considered in Subdividing the Primary Zinc Subcategory	1495
	Other Factors	1495
	Type of Plant	1495
	Plant Size	1496
	Production Normalizing Parameters	1496
V	WATER USE AND WASTEWATER CHARACTERISTICS	1499
	Wastewater Sources, Discharge Rates, and Characteristics	1500
	Zinc Reduction Furnace Wet Air Pollution Control	1502
	Preleach Wastewater	1503
	Leaching Wet Air Pollution Control	1503
	Electrolyte Bleed Wastewater	1503
	Cathode and Anode Washing Wastewater	1504
	Casting Wet Air Pollution Control	1504
	Casting Contact Cooling	1504
	Cadmium Plant Wastewater	1504

TABLE OF CONTENTS (Continued)

Section		Page
VI	SELECTION OF POLLUTANT PARAMETERS	1583
	Conventional and Nonconventional Pollutant Parameters	1584
	Conventional and Nonconventional Pollutant Parameters Selected	1584
	Toxic Pollutants	1584
	Toxic Pollutants Never Detected	1584
	Toxic Pollutants Never Found Above Their Analytical Quantification Limit	1584
	Toxic Pollutants Present Below Concentrations Achievable by Treatment	1584
	Toxic Pollutants Detected in a Small Number of Sources	1585
	Toxic Pollutants Selected for Further Consideration for Establishing Limitations and Standards	1587
VII	CONTROL AND TREATMENT TECHNOLOGIES	1597
	Technical Basis of BPT	1597
	Current Control and Treatment Practices	1597
	Zinc Reduction Furnace Wet Air Pollution Control	1598
	Preleach Wastewater	1598
	Leaching Wet Air Pollution Control	1598
	Electrolyte Bleed Wastewater	1598
	Cathode and Anode Washing Wastewater	1598
	Casting Wet Air Pollution Control	1599
	Casting Contact Cooling	1599
	Cadmium Plant Wastewater	1599
	Control and Treatment Options	1599
	Option A	1600
	Option B	1600
	Option C	1600
	Treatment Technologies Rejected at Proposal	1600
	Option D	1600
	Option F	1601
VIII	COSTS, ENERGY AND NONWATER QUALITY ASPECTS	1603
	Treatment Options Considered	1603
	Option A	1603
	Option B	1603
	Option C	1603
	Cost Methodology	1603
	Nonwater Quality Aspects	1604
	Energy Requirements	1605
	Solid Waste	1605
	Air Pollution	1606

TABLE OF CONTENTS (Continued)

Section		Page
IX	BEST PRACTICABLE TECHNOLOGY CURRENTLY AVAILABLE	1609
X	BEST AVAILABLE TECHNOLOGY ECONOMICALLY ACHIEVABLE	1611
	Technical Approach to BAT	1611
	Option A	1612
	Option B	1612
	Recycle of Water Used in Wet Air Pollution Control	1612
	Recycle of Casting Contact Cooling Through Cooling Towers	1613
	Option C	1613
	Industry Cost and Pollutant Removal Estimates	1614
	Pollutant Removal Estimates	1614
	Compliance Costs	1614
	BAT Option Selection - Proposal	1615
	BAT Option Selection - Promulgation	1615
	Wastewater Discharge Rates	1616
	Zinc Reduction Furnace Wet Air Pollution Control Wastewater	1617
	Preleach Wastewater	1617
	Leaching Wet Air Pollution Control Wastewater	1617
	Electrolyte Bleed Wastewater	1618
	Cathode and Anode Washing Wastewater	1618
	Casting Wet Air Pollution Control	1619
	Casting Contact Cooling	1619
	Cadmium Plant Production	1619
	Regulated Pollutant Parameters	1620
	Effluent Limitations	1621
XI	NEW SOURCE PERFORMANCE STANDARDS	1633
	Technical Approach to BDT	1633
	Option A	1633
	Option B	1633
	Option C	1633
	BDT Option Selection	1633
	Regulated Pollutant Parameters	1634
	New Source Performance Standards	1634

TABLE OF CONTENTS (Continued)

Section		Page
XII	PRETREATMENT STANDARDS	1641
	Technical Approach to Pretreatment	1641
	Pretreatment Standards for Existing and New Sources	1642
	Option A	1642
	Option B	1642
	Option C	1642
	Industry Cost and Pollutant Removal Estimates	1642
	PSES Option Selection	1643
	PSNS Option Selection	1643
	Regulated Pollutant Parameters	1643
	Pretreatment Standards	1643
XIII	BEST CONVENTIONAL POLLUTANT CONTROL TECHNOLOGY	1655

LIST OF TABLES

Table No.		Page
III-1	INITIAL OPERATING YEAR (RANGE) SUMMARY OF PLANTS IN THE PRIMARY ZINC SUBCATEGORY BY DISCHARGE TYPE	1486
III-2	PRODUCTION RANGE FOR THE PRIMARY ZINC SUBCATEGORY	1487
III-3	SUMMARY OF PRIMARY ZINC PROCESSES AND ASSOCIATED WASTE STREAMS	1488
V-1	WATER USE AND DISCHARGE RATES FOR ZINC REDUCTION FURNACE WET AIR POLLUTION CONTROL	1506
V-2	WATER USE AND DISCHARGE RATES FOR LEACHING WET AIR POLLUTION CONTROL	1506
V-3	WATER USE AND DISCHARGE RATES FOR CATHODE AND ANODE WASHING WASTEWATER	1507
V-4	WATER USE AND DISCHARGE RATES FOR CASTING WET AIR POLLUTION CONTROL	1507
V-5	WATER USE AND DISCHARGE RATES FOR CASTING CONTACT COOLING	1508
V-6	WATER USE AND DISCHARGE RATES FOR CADMIUM PLANT WASTEWATER	1508
V-7	ELECTROLYTE BLEED RAW WASTEWATER SAMPLING DATA	1509
V-8	CATHODE BRUSH WATER AND ANODE CLEANING WATER RAW WASTEWATER SAMPLING DATA	1513
V-9	PRIMARY ZINC SAMPLING DATA COMBINED RAW WASTEWATER	1526
V-10	PRIMARY ZINC SAMPLING DATA MISCELLANEOUS RAW WASTEWATER	1528
V-11	MISCELLANEOUS WASTEWATER SAMPLING DATA	1531
V-12	MISCELLANEOUS WASTEWATER SAMPLING DATA (Additional Streams)	1542

LIST OF TABLES (Continued)

Table No.		Page
V-13	PRIMARY ZINC SAMPLING DATA, TREATMENT PLANT SAMPLES, PLANT A	1552
V-14	PRIMARY ZINC SAMPLING DATA, TREATMENT PLANT SAMPLES, PLANT B	1554
V-15	PRIMARY ZINC SAMPLING DATA, TREATMENT PLANT SAMPLES, PLANT C	1556
V-16	PRIMARY ZINC SAMPLING DATA, TREATMENT PLANT SAMPLES, PLANT D	1558
V-17	PRIMARY ZINC SAMPLING DATA, TREATMENT PLANT SAMPLES, PLANT E	1559
V-18	PRIMARY ZINC SAMPLING DATA, TREATMENT PLANT SAMPLES, PLANT G	1564
VI-1	FREQUENCY OF OCCURRENCE OF TOXIC POLLUTANTS PRIMARY ZINC RAW WASTEWATER	1590
VI-2	TOXIC POLLUTANTS NEVER DETECTED	1594
VI-3	TOXIC POLLUTANTS NEVER FOUND ABOVE THEIR ANALYTICAL QUANTIFICATION LIMIT	1596
VIII-1	COST OF COMPLIANCE FOR THE PRIMARY ZINC SUBCATEGORY, DIRECT DISCHARGERS	1507
VIII-2	COST OF COMPLIANCE FOR THE PRIMARY ZINC SUBCATEGORY, INDIRECT DISCHARGERS	1507
X-1	CURRENT RECYCLE PRACTICES WITHIN THE PRIMARY ZINC SUBCATEGORY	1622
X-2	POLLUTANT REMOVAL ESTIMATES FOR PRIMARY ZINC, DIRECT DISCHARGERS	1623
X-3	BAT WASTEWATER RATES FOR THE PRIMARY ZINC SUBCATEGORY	1624
X-4	BAT EFFLUENT LIMITATIONS FOR THE PRIMARY ZINC SUBCATEGORY	1625
XI-1	NSPS WASTEWATER DISCHARGE RATES FOR THE PRIMARY ZINC SUBCATEGORY	1635

LIST OF TABLES (Continued)

Table No.		Page
XI-2	NSPS FOR THE PRIMARY ZINC SUBCATEGORY	1636
XII-1	POLLUTANT REMOVAL ESTIMATES FOR PRIMARY ZINC INDIRECT DISCHARGERS	1645
XII-2	PSES AND PSNS WASTEWATER DISCHARGE RATES FOR THE PRIMARY ZINC SUBCATEGORY	1646
XII-3	PSES FOR THE PRIMARY ZINC SUBCATEGORY	1647
XII-4	PSNS FOR THE PRIMARY ZINC SUBCATEGORY	1651

Page Intentionally Blank

LIST OF FIGURES

Figure No.		Page
III-1	ELECTROLYTIC ZINC PRODUCTION PROCESSES	1489
III-2	GENERALIZED FLOWSHEET OF PYROLYTIC ZINC PLANTS	1490
III-3	PYROMETALLURGICAL CADMIUM PRODUCTION PROCESS	1491
III-4	HYDROMETALLURGICAL CADMIUM PRODUCTION PROCESS	1492
III-5	GEOGRAPHICAL LOCATIONS OF PRIMARY ZINC PLANTS	1493
V-1	SAMPLING SITES AT PRIMARY ZINC PLANT A	1576
V-2	SAMPLING SITES AT PRIMARY ZINC PLANT B	1577
V-3	SAMPLING SITES AT PRIMARY ZINC PLANT C	1578
V-4	SAMPLING SITES AT PRIMARY ZINC PLANT D	1579
V-5	SAMPLING SITES AT PRIMARY ZINC PLANT E	1580
V-6	SAMPLING SITES AT PRIMARY ZINC PLANT F	1581
V-7	SAMPLING SITES AT PRIMARY ZINC PLANT G	1582
X-1	BAT TREATMENT SCHEME, OPTION A PRIMARY ZINC SUBCATEGORY	1629
X-2	BAT TREATMENT SCHEME, OPTION B PRIMARY ZINC SUBCATEGORY	1630
X-3	BAT TREATMENT SCHEME, OPTION C PRIMARY ZINC SUBCATEGORY	1631

Page Intentionally Blank

SECTION I

SUMMARY

On February 27, 1975, EPA promulgated technology-based effluent limitations and performance standards for the primary zinc subcategory of the Nonferrous Metals Manufacturing Point Source Category. On March 8, 1984, EPA promulgated amendments to the effluent limitations and standards for this subcategory pursuant to the provisions of the Clean Water Act as amended. This supplement provides a compilation and analysis of the background material used to develop these effluent limitations and standards. This subcategory regulation includes BPT, BAT, NSPS, PSES and PSNS.

The primary zinc subcategory is comprised of nine plants. Of the nine plants, three discharge directly to rivers, lakes, or streams; one discharges to a publicly owned treatment works (POTW); and five achieve zero discharge of process wastewater.

EPA first studied the primary zinc subcategory to determine whether differences in raw materials, final products, manufacturing processes, equipment, age and size of plants, water usage, required the development of separate effluent limitations and standards for different segments of the subcategory. This involved a detailed analysis of wastewater discharge and treated effluent characteristics, including (1) the sources and volume of water used, the processes employed, and the sources of pollutants and wastewaters in the plant; and (2) the constituents of wastewaters, including toxic pollutants.

Several distinct control and treatment technologies (both in-plant and end-of-pipe) applicable to the primary zinc subcategory were identified. The Agency analyzed both historical and newly generated data on the performance of these technologies, including their nonwater quality environmental impacts (such as air quality impacts and solid waste generation) and energy requirements. EPA also studied various flow reduction techniques reported in the data collection portfolios (dcp) and plant visits.

Engineering costs were prepared for each of the control and treatment options considered for the subcategory. These costs were then used by the Agency to estimate the impact of implementing the various options in the industry. For each control and treatment option that the Agency found to be most effective and technically feasible in controlling the discharge of pollutants, the number of potential closures, number of employees affected, and impact on price were estimated. These results are reported in a separate document entitled Economic Impact Analysis of Effluent Limitations and Standards for the Nonferrous Smelting and Refining Industry.

Based on consideration of the above factors, EPA identified various control and treatment technologies which formed the basis for BPT and selected control and treatment appropriate for each set of standards and limitations. The mass limitations and standards for BPT, BAT, NSPS, PSES, and PSNS are presented in Section II.

For BAT, the Agency has built upon the BPT basis by adding in-process control technologies which include recycle of process water from air pollution control and metal contact cooling waste streams. Filtration is added as an effluent polishing step to the end-of-pipe treatment scheme. Sulfide precipitation and sedimentation technology is included after lime precipitation and sedimentation to achieve the performance by application of lime, settle, and filtration technology. To meet the BAT effluent limitations based on this technology, the primary zinc subcategory is estimated to incur a capital cost of $0.457 million (1982 dollars) and an annual cost of $0.236 million (1982 dollars).

The best demonstrated technology (BDT), which is the technical basis of NSPS, is equivalent to BAT. In selecting BDT, EPA recognizes that new plants have the opportunity to implement the best and most efficient manufacturing processes and treatment technology. As such, the technology basis of BAT has been determined as the best demonstrated technology.

EPA did not propose pretreatment standards for existing sources (PSES) for the primary zinc subcategory. Since that time, the Agency has learned that one primary zinc plant previously thought to be a zero discharger is actually an indirect discharger. There fore, the Agency is promulgating PSES for the primary zinc sub- category based on the BAT model technology and flow allowances. The technology basis is in-process flow reduction, lime precipitation and sedimentation, sulfide precipitation and sedimentation, and multimedia filtration.

The technology basis for pretreatment standards for new sources (PSNS) is the best demonstrated technology, and the PSNS are identical to NSPS for all building blocks.

SECTION II

CONCLUSIONS

EPA has divided the primary zinc subcategory into eight subdivisions or building blocks for the purpose of effluent limitations and standards. These building blocks are:

(a) Zinc reduction furnace wet air pollution control,
(b) Preleach of zinc concentrates,
(c) Leaching wet air pollution control,
(d) Electrolyte bleed,
(e) Cathode and anode wash wastewater,
(f) Casting wet air pollution control,
(g) Casting contact cooling, and
(h) Cadmium plant wastewater.

EPA promulgated BPT and BAT effluent limitations for the primary zinc subcategory on February 27, 1975 as Subpart H of 40 CFR Part 421. At this time, EPA is not promulgating any modifications to BPT effluent limitations. The effluent limitations and standards apply to discharges resulting from the production of primary zinc by either electrolytic of pyrolytic means. BPT was promulgated based on the performance achievable by the application of chemical precipitation and sedimentation (lime and settle) technology.

The following BPT effluent limitations were promulgated:

	Effluent Limitations	
Effluent Characteristic	Maximum for Any One Day	Average of Daily Values for 30 Consecutive Days Shall Not Exceed
	Metric Units (kg/kkg of product) English Units (lb/1,000 lb of product)	
TSS	0.42	0.21
As	1.6 x 10-3	8 x 10-4
Cd	0.008	0.004
Se	0.08	0.04
Zn	0.08	0.04
pH	Within the range of 6.0 to 9.0	

EPA is modifying the BAT effluent limitations to take into account the pollutant concentrations achievable by the application of lime precipitation and sedimentation, sulfide precipitation and sedimentation, multimedia filtration technology, and in-process flow reduction control methods. The following BAT effluent limitations are promulgated for existing sources:

(a) Zinc Reduction Furnace Wet Air Pollution Control BAT

Pollutant or Pollutant Property	Maximum for Any One Day	Maximum for Monthly Average
Metric Units - mg/kg of zinc reduced English Units - lbs/million lbs of zinc reduced		
Cadmium	0.334	0.134
Copper	2.135	1.018
Lead	0.467	0.217
Zinc	1.702	0.701

(b) Preleach of Zinc Concentrates BAT

Pollutant or Pollutant Property	Maximum for Any One Day	Maximum for Monthly Average
Metric Units - mg/kg of concentrate leached English Units - lbs/million lbs of concentrate leached		
Cadmium	0.180	0.072
Copper	1.153	0.550
Lead	0.252	0.117
Zinc	0.919	0.378

(c) Leaching Wet Air Pollution Control BAT

Pollutant or Pollutant Property	Maximum for Any One Day	Maximum for Monthly Average
Metric Units - mg/kg of zinc processed through leaching English Units - lbs/million lbs of zinc processed through leaching		
Cadmium	0	0
Copper	0	0
Lead	0	0
Zinc	0	0

(d) Electrolyte Bleed Wastewater BAT

Pollutant or Pollutant Property	Maximum for Any One Day	Maximum for Monthly Average
Metric Units - mg/kg of cathode zinc produced English Units - lbs/million lbs of cathode zinc produced		
Cadmium	0.086	0.035
Copper	0.553	0.264
Lead	0.121	0.056
Zinc	0.441	0.182

(e) Cathode and Anode Wash Wastewater BAT

Pollutant or Pollutant Property	Maximum for Any One Day	Maximum for Monthly Average
Metric Units - mg/kg of cathode zinc produced English Units - lbs/million lbs of cathode zinc produced		
Cadmium	0.150	0.060
Copper	0.961	0.458
Lead	0.210	0.098
Zinc	0.766	0.315

(f) Casting Wet Air Pollution Control BAT

Pollutant or Pollutant Property	Maximum for Any One Day	Maximum for Monthly Average
Metric Units - mg/kg of zinc cast English Units - lbs/million lbs of zinc cast		
Cadmium	0.051	0.021
Copper	0.329	0.157
Lead	0.072	0.033
Zinc	0.262	0.108

(g) Casting Contact Cooling BAT

Pollutant or Pollutant Property	Maximum for Any One Day	Maximum for Monthly Average
Metric Units - mg/kg of zinc cast English Units - lbs/million lbs of zinc cast		
Cadmium	0.036	0.014
Copper	0.232	0.110
Lead	0.051	0.024
Zinc	0.185	0.076

(h) Cadmium Plant Wastewater BAT

Pollutant or Pollutant Property	Maximum for Any One Day	Maximum for Monthly Average
Metric Units - mg/kg of cadmium produced English Units - lbs/million lbs of cadmium produced		
Cadmium	1.234	0.494
Copper	7.899	3.765
Lead	1.728	0.802
Zinc	6.295	2.592

NSPS are promulgated based on the performance achievable by the application of lime precipitation, sedimentation, sulfide precipitation, sedimentation, and multimedia filtration technology and in-process flow reduction control methods. The following effluent standards are promulgated for new sources:

(a) Zinc Reduction Furnace Wet Air Pollution Control NSPS

Pollutant or Pollutant Property	Maximum for Any One Day	Maximum for Monthly Average
Metric Units - mg/kg of zinc reduced English Units - lbs/million lbs of zinc reduced		
Cadmium	0.334	0.134
Copper	2.135	1.018
Lead	0.467	0.217
Zinc	1.702	0.701
TSS	25.020	20.020
pH	Within the range of 7.0 to 10.0 at all times	

(b) Preleach of Zinc Concentrates NSPS

Pollutant or Pollutant Property	Maximum for Any One Day	Maximum for Monthly Average
Metric Units - mg/kg of concentrate leached English Units - lbs/million lbs of concentrate leached		
Cadmium	0.180	0.072
Copper	1.153	0.550
Lead	0.252	0.117
Zinc	0.919	0.378
TSS	13.520	10.810
pH	Within the range of 7.0 to 10.0 at all times	

(c) Leaching Wet Air Pollution Control NSPS

Pollutant or Pollutant Property	Maximum for Any One Day	Maximum for Monthly Average
Metric Units - mg/kg of zinc processed through leaching English Units - lbs/million lbs of zinc processed through leaching		
Cadmium	0	0
Copper	0	0
Lead	0	0
Zinc	0	0
TSS	0	0
pH	Within the range of 7.0 to 10.0 at all times	

(d) Electrolyte Bleed Wastewater NSPS

Pollutant or Pollutant Property	Maximum for Any One Day	Maximum for Monthly Average
Metric Units - mg/kg of cathode zinc produced English Units - lbs/million lbs of cathode zinc produced		
Cadmium	0.086	0.035
Copper	0.553	0.264
Lead	0.121	0.056
Zinc	0.441	0.182
TSS	6.480	5.184
pH	Within the range of 7.0 to 10.0 at all times	

(e) Cathode and Anode Wash Wastewater NSPS

Pollutant or Pollutant Property	Maximum for Any One Day	Maximum for Monthly Average
Metric Units - mg/kg of cathode zinc produced English Units - lbs/million lbs of cathode zinc produced		
Cadmium	0.150	0.060
Copper	0.961	0.458
Lead	0.210	0.098
Zinc	0.766	0.315
TSS	11.270	9.012
pH	Within the range of 7.0 to 10.0 at all times	

(f) Casting Wet Air Pollution Control NSPS

Pollutant or Pollutant Property	Maximum for Any One Day	Maximum for Monthly Average
Metric Units - mg/kg of zinc cast English Units - lbs/million lbs of zinc cast		
Cadmium	0.051	0.021
Copper	0.329	0.157
Lead	0.072	0.033
Zinc	0.262	0.108
TSS	3.855	3.084
pH	Within the range of 7.0 to 10.0 at all times	

(g) Casting Contact Cooling NSPS

Pollutant or Pollutant Property	Maximum for Any One Day	Maximum for Monthly Average
Metric Units - mg/kg of zinc cast English Units - lbs/million lbs of zinc cast		
Cadmium	0.036	0.014
Copper	0.232	0.110
Lead	0.051	0.024
Zinc	0.185	0.076
TSS	2.715	2.172
pH	Within the range of 7.0 to 10.0 at all times	

(h) Cadmium Plant Wastewater NSPS

Pollutant or Pollutant Property	Maximum for Any One Day	Maximum for Monthly Average
Metric Units - mg/kg of cadmium produced English Units - lbs/million lbs of cadmium produced		
Cadmium	1.234	0.494
Copper	7.899	3.765
Lead	1.728	0.802
Zinc	6.295	2.592
TSS	92.570	74.050
pH	Within the range of 7.0 to 10.0 at all times	

PSES are promulgated based on the performance achievable by the application of lime precipitation and sedimentation, sulfide precipitation and sedimentation, multimedia filtration technology, and in-process flow reduction control methods. The following pretreatment standards are promulgated for new sources:

(a) Zinc Reduction Furnace Wet Air Pollution Control PSES

Pollutant or Pollutant Property	Maximum for Any One Day	Maximum for Monthly Average
Metric Units - mg/kg of zinc reduced English Units - lbs/million lbs of zinc reduced		
Cadmium	0.334	0.134
Zinc	1.702	0.701

(b) Preleach of Zinc Concentrates PSES

Pollutant or Pollutant Property	Maximum for Any One Day	Maximum for Monthly Average
Metric Units - mg/kg of concentrate leached English Units - lbs/million lbs of concentrate leached		
Cadmium	0.180	0.072
Zinc	0.919	0.378

(c) Leaching Wet Air Pollution Control PSES

Pollutant or Pollutant Property	Maximum for Any One Day	Maximum for Monthly Average
Metric Units - mg/kg of zinc processed through leaching English Units - lb/million lbs of zinc processed through leaching		
Cadmium	0.000	0.000
Zinc	0.000	0.000

(d) Electrolyte Bleed Wastewater PSES

Pollutant or Pollutant Property	Maximum for Any One Day	Maximum for Monthly Average
Metric Units - mg/kg of cathode zinc produced English Units - lb/million lbs of cathode zinc produced		
Cadmium	0.086	0.035
Zinc	0.441	0.182

(e) Cathode and Anode Wash Wastewater PSES

Pollutant or Pollutant Property	Maximum for Any One Day	Maximum for Monthly Average
Metric Units - mg/kg of cathode zinc produced English Units - lb/million lbs of cathode zinc produced		
Cadmium	0.150	0.060
Zinc	0.766	0.315

(f) Casting Wet Air Pollution Control PSES

Pollutant or Pollutant Property	Maximum for Any One Day	Maximum for Monthly Average
Metric Units - mg/kg of zinc cast English Units - lb/million lbs of zinc cast		
Cadmium	0.051	0.021
Zinc	0.262	0.108

(g) Casting Contact Cooling PSES

Pollutant or Pollutant Property	Maximum for Any One Day	Maximum for Monthly Average
Metric Units - mg/kg of zinc cast English Units - lbs/million lbs of zinc cast		
Cadmium	0.036	0.014
Zinc	0.185	0.076

(h) Cadmium Plant Wastewater PSES

Pollutant or Pollutant Property	Maximum for Any One Day	Maximum for Monthly Average
Metric Units - mg/kg of cadmium produced English Units - lbs/million lbs of cadmium produced		
Cadmium	1.234	0.494
Zinc	6.295	2.592

PSNS are promulgated based on the performance achievable by the application of lime precipitation and sedimentation, sulfide precipitation and sedimentation, multimedia filtration technology, and in-process flow reduction control methods. The following pretreatment standards are promulgated for new sources:

(a) Zinc Reduction Furnace Wet Air Pollution Control PSNS

Pollutant or Pollutant Property	Maximum for Any One Day	Maximum for Monthly Average
Metric Units - mg/kg of zinc reduced English Units - lbs/million lbs of zinc reduced		
Cadmium	0.334	0.134
Zinc	1.702	0.701

(b) Preleach of Zinc Concentrates PSNS

Pollutant or Pollutant Property	Maximum for Any One Day	Maximum for Monthly Average
Metric Units - mg/kg of concentrate leached English Units - lbs/million lbs of concentrate leached		
Cadmium	0.180	0.072
Zinc	0.919	0.378

(c) Leaching Wet Air Pollution Control PSNS

Pollutant or Pollutant Property	Maximum for Any One Day	Maximum for Monthly Average
Metric Units - mg/kg of zinc processed through leaching English Units - lbs/million lbs of zinc processed through leaching		
Cadmium	0	0
Zinc	0	0

(d) Electrolyte Bleed Wastewater PSNS

Pollutant or Pollutant Property	Maximum for Any One Day	Maximum for Monthly Average
Metric Units - mg/kg of cathode zinc produced English Units - lb/million lbs of cathode zinc produced		
Cadmium	0.086	0.035
Zinc	0.441	0.182

(e) Cathode and Anode Wash Wastewater PSNS

Pollutant or Pollutant Property	Maximum for Any One Day	Maximum for Monthly Average
Metric Units - mg/kg of cathode zinc produced English Units - lbs/million lbs of cathode zinc produced		
Cadmium	0.150	0.060
Zinc	0.766	0.315

(f) Casting Wet Air Pollution Control PSNS

Pollutant or Pollutant Property	Maximum for Any One Day	Maximum for Monthly Average
Metric Units - mg/kg of zinc cast English Units - lbs/million lbs of zinc cast		
Cadmium	0.051	0.021
Zinc	0.262	0.108

(g) Casting Contact Cooling NSPS

Pollutant or Pollutant Property	Maximum for Any One Day	Maximum for Monthly Average
Metric Units - mg/kg of zinc cast English Units - lbs/million lbs of zinc cast		
Cadmium	0.036	0.014
Zinc	0.185	0.076

(h) Cadmium Plant Wastewater PSNS

Pollutant or Pollutant Property	Maximum for Any One Day	Maximum for Monthly Average
Metric Units - mg/kg of cadmium produced English Units - lbs/million lbs of cadmium produced		
Cadmium	1.234	0.494
Zinc	6.295	2.592

Page Intentionally Blank

SECTION III

INDUSTRY PROFILE

This section of the primary zinc supplement describes the raw materials and processes used in producing primary zinc and presents a profile of the primary zinc plants identified in this study.

DESCRIPTION OF PRIMARY ZINC PRODUCTION

There are two zinc production processes; pyrolytic and electrolytic. The pyrolytic process involves the roasting of zinc concentrates followed by preparation of the roasting calcine for reduction in either electrothermic or vertical retort furnaces. The electrolytic process also involves roasting followed by leaching and electrolytic precipitation. At the present time, four plants use the electrolytic process and one uses the pyrolytic process. Three other plants produce zinc oxide pyrolytically. One of the three plants purifies zinc oxide intermediates produced at another facility. The ninth plant currently operating in the subcategory produces only cadmium from baghouse dust collected at other facilities.

There are a number of by-products associated with the production of zinc. Cadmium and sulfuric acid are the two major by-products. Currently, six zinc plants have sulfuric acid plants and cadmium plants on site. (For further discussion of acid plants, refer to the Metallurgical Acid Plants Subcategory Supplement).

RAW MATERIALS

The principal raw material used to produce zinc is zinc ore concentrate. More than two-thirds of the zinc concentrate produced in the United States is recovered as a co-product from lead and copper ores; slightly less than one-third originates from zinc ores.

ELECTROLYTIC ZINC PRODUCTION

Figure III-1 (page 1489) presents a general flow diagram of the electrolytic zinc production process. The primary steps involved in this process are:

1. Roasting,
2. Leaching,
3. Purification,
4. Electrolytic precipitation, and
5. Cathode melting and casting.

Prior to roasting, magnesium may be removed from high-magnesia concentrates by preleaching with weak sulfuric acid. This is

done to prevent the build-up of magnesium in the electrolyte. Currently, two of the four electrolytic plants leach prior to roasting. One of the two reports a wastewater stream resulting from the leaching process. The second plant currently is not operating the process. The build-up of magnesium in the electrolyte also can be alleviated by bleeding spent electrolyte from the electrolytic precipitation process. One plant practices this method of magnesium removal. The spent electrolyte is sent to treatment. From the available data, it appears that the fourth electrolytic plant does not operate a distinct step for removing magnesium.

Roasting the zinc concentrates prior to leaching converts the zinc sulfide present in the concentrates to zinc oxide and sulfur dioxide. The chemical reaction for this process is:

$$ZnS + 3O_2 = ZnO + SO_2 \qquad (1)$$

Zinc oxide is more amenable to leaching than zinc sulfide. The zinc concentrates are roasted in multiple hearth, flash, and fluid bed roasters. All four of the plants that produce zinc electrolytically use fluid bed roasters. The exhaust gases from the roasters are conditioned by dust collection equipment prior to entering an acid plant where the sulfur dioxide is converted to sulfuric acid. Wastewater produced by the conditioning of roaster off-gases is considered part of the acid plant.

The zinc oxide calcines from the roaster may be finely ground in a ball mill and charged to the leaching process. Spent electrolyte containing sulfuric acid and residual zinc sulfate, and make up sulfuric acid are added to the process as the solvent. The spent electrolyte is recycled from the electrolytic precipitation cells which follow. The acid dissolves the ZnO present in the calcines. The chemical reaction for this process is:

$$ZnO + H_2SO14s = ZnSO_4 + H_2O \qquad (2)$$

Through careful control of pH, the various impurities present in the calcines such as iron, silica, arsenic, and antimony are converted to insoluble hydroxides and oxides. These insoluble impurities become part of the underflow and can be processed further to recover residual zinc. Following residual zinc recovery, the final residue containing lead and precious metals is usually sent to a lead smelter.

Cadmium and a portion of the copper present in the calcine are dissolved along with zinc and leave the leaching process as part of the overflow. Because an acid is used as the solvent, air pollution control may be necessary to control air emissions from the leaching process. Three plants report the use of wet scrubbers to control the air emissions. The scrubber liquor produced by these scrubbers is a source of wastewater.

After leaching, the overflow is filtered to remove suspended

solids and then purified. The purpose of the purification process is to remove copper and cadmium from solution. Lesser impurities such as cobalt, germanium, arsenic, and antimony must also be removed. Purification must be extremely efficient because even minute quantities of impurity metals adversely affect the electrolytic precipitation process. Purification is accomplished by adding zinc dust, which precipitates the copper, cadmium, and lesser impurities by replacement. By adding zinc dust in multiple stages, it is possible to make rough separations, such as a high-copper precipitate and a high cadmium precipitate, while precipitating impurities. The cadmium precipitate is sent to a cadmium plant. Copper precipitate may be releached with spent electrolyte to remove zinc, and then be sent to a copper refinery.

The purified zinc sulfate solution from the leaching process is now ready for electrolytic precipitation. The electrolytic precipitation process is carried out in a tankhouse containing 50 to 250 tanks. Each tank contains a number of alternate anodes and cathodes. The zinc containing electrolyte flows slowly from tank to tank. Zinc is deposited from solution onto the cathodes until the deposit attains the required thickness. The cathodes are then removed for zinc stripping. Wastewater is generated by washing the cathode zinc prior to casting. The spent electrolyte is sent to the leaching process where it is used as the solvent. One plant bleeds some of the spent electrolyte to treatment as a means of controlling magnesium build-up in the circuit.

The cathode sheets are melted in an electric furnace prior to casting. Fumes and dust from this process are usually collected in a baghouse, however one plant uses a scrubber to collect these emissions. The scrubber liquor produced is another source of wastewater.

After melting, the molten zinc is cast into ingots, sows, slabs, or other shapes. The contact cooling water used in casting is a source of wastewater.

PYROLYTIC ZINC PRODUCTION

Figure III-2 (page 1490) presents a general flow diagram of the pyrolytic zinc production process. The primary steps involved in this process are:

1. Roasting,
2. Sintering,
3. Reduction, and
4. Refining.

Three plants process zinc concentrates pyrolytically. Two of the plants use rotary concentrate dryers ahead of the roasters for moisture content adjustment of the concentrate. Venturi scrubbers are used to clean the gaseous emissions from these dryers. The liquor produced by these scrubbers is a potential source of wastewater.

After drying, the zinc concentrates are fed to the roasting plant. Zinc concentrates currently used consist of zinc sulfide (ZnS) or franklinite ($ZnFe_2O_4$). Two plants roast zinc sulfide and the third plant roasts franklinite. In the two plants processing zinc sulfide, roasting converts the ZnS present in the concentrates to ZnO and SO_2. More than 90 percent of the sulfur is removed in the roasters, however, it is not necessary to remove all the sulfur since the sintering process which follows will consume the remaining sulfur. Roasting also volatizes the cadmium and lead impurities present in the concentrates. The gaseous emissions from roasting pass through dust collection equipment before entering an acid plant where SO2 is converted to sulfuric acid. Both pyrolytic plants processing zinc sulfide use dry collection equipment to condition the roaster off-gases. The pyrolytic plant that roasts franklinite does not currently operate its acid plant because franklinite does not contain sulfur. Roasting converts the franklinite to zinc oxide.

The roasting may be accomplished in flash, multiple hearth, or fluid bed roasters. One plant uses a fluid bed roaster, one plant uses flash roasters, and the third plant uses all three. Because of the high temperatures associated with the off-gases, waste heat boilers may be used to conserve energy. Two of the three pyrolytic plants with roasters produce zinc oxide as their final product. A fourth pyrolytic plant processes the calcine from another pyrolytic plant to produce high-purity zinc oxide.

Calcine from the roasters along with baghouse or electrostatic precipitator dusts, various residues, zinc oxide materials, and return portions for resintering make up the feed for sintering. This feed is mixed with coke and a small portion of silica sand. The silica is added for structural strength, and is pelletized to assure a uniform, permeable bed for sintering. Sintering is a heating process that agglomerates the small feed particles into a granular form without melting. One plant currently practices sintering. Sintering removes the remaining sulfur from the calcine along with as much as 90 percent of the cadmium and 70 percent of the lead. Sulfur is oxidized to SO_2, while cadmium and lead are volatilized. The one plant with sintering uses air pollution control on its sintering machines. This plant uses three electrostatic precipitators and one fabric filter bag collector in parallel. The electrostatic precipitators are preceded by spray chambers. The spray chamber water is recycled with a bleed stream used at the sinter plant in the pelletizing process. After pelletizing, some of this water is discharged.

The product from the sintering plant is now ready for reduction. The reduction process is accomplished in either electrothermic or vertical retort furnaces. The one plant with a sintering operation uses electrothermic furnaces. In the electrothermic furnaces, preheated coke and sinter, along with miscellaneous zinc bearing products are fed to the furnace. Vertical retort furnaces could also be used. The vertical retort furnaces require the sinter to be ground, mixed with pulverized coal,

clay, moisture, a binder, and then briquetted. In both furnaces the zinc oxide is reduced by carbon to metallic zinc and carbon monoxide. The chemical reactions for this process are:

$$ZnO + CO = Zn(vapor) + CO_2 \quad (3)$$

$$+ \quad CO_2 + C = 2CO \quad (4)$$

$$ZnO + C = Zn + CO \quad (5)$$

The zinc vaporizes and is collected in a condensing device. A wet scrubber in combination with a baghouse is used to rid the carbon monoxide stream of entrained solids. The plant with this scrubber practices extensive recycle of the scrubber liquor. Blue powder, a mixture of metallic zinc and zinc oxide, is periodically collected as a scrubbing or baghouse residue. This material is recycled.

The condensed zinc metal may be purified by liquation or redistillation. In liquation, the metal is allowed to cool to just above the melting point of zinc. At this temperature, any lead and iron present in amounts exceeding their solubility in zinc separate by precipitation and can be removed mechanically. Redistillation involves the use of dual fractionating columns to separate the zinc from cadmium, iron, and lead impurities. Zinc and cadmium are vaporized in the first column while the iron and lead remain liquid. The zinc and cadmium vapors are condensed and then fed to the second fractionating column, where zinc remains as a liquid while the cadmium vaporizes. Cadmium vapors are condensed to produce a cadmium-zinc alloy containing approximately 15 percent cadmium. The high-grade zinc metal removed from the bottom of the second column is used for special applications which require high purity metal, such as die casting alloys.

After liquation or redistillation, the zinc is cast into various shapes such as ingots or sows. Wastewater associated with casting contact cooling is produced by one of the pyrolytic plants.

CADMIUM PRODUCTION

Figures III-3 and III-4 (pages 1491 and 1492) present the general flow diagrams for two different cadmium production processes. Figure III-3 shows a pyrometallurgical process while Figure III-4 presents a hydrometallurgical process. In both processes, various residues from zinc refining operations, and cadmium precipitated by zinc dust in purifying zinc solutions are important cadmium sources. Cadmium-bearing dusts and residues may be allowed to oxidize in air or roasted to further oxidize cadmium prior to leaching. Infrequently, one plant washes the feed material with water to remove chloride before roasting. The cadmium-bearing material is leached by either a sulfuric acid solution or a solution made up of spent electrolyte and sulfuric

acid. Cadmium is then precipitated from solution by galvanic displacement with zinc dust. After the precipitation step, cadmium is extracted either pyrometallurgically or hydrometallurgically. In the pyrometallurgical process, the cadmium sponge is washed to remove water-soluble impurities and compacted by briquetting. As a final purification step, the briquettes may be melted using sodium hydroxide as a flux to remove impurities such as iron, tin, lead, copper, and antimony. The cadmium is then cast into various shapes.

In the hydrometallurgical process, the cadmium sponge is leached with sulfuric acid and spent electrolyte from the cadmium electrolysis cells which follow. Following filtration, the cadmium sulfate solution is processed electrolytically. Cadmium deposits on the cathode and is stripped when the desired thickness is acquired. Following stripping, the cadmium is cast into various shapes. Contact cooling water is sometimes used in casting. The cast cadmium may be cleaned with caustic or solvents and rinsed. Rinse water is usually discharged to waste treatment. There are a number of wastewater sources in the cadmium recovery process. The major sources are associated with the following:

1. Cadmium feed wash water,
2. Leaching tank discharge,
3. Cadmium sponge wash water,
4. Cathode wash water,
5. Casting contact cooling water, and
6. Cadmium metal cleaning water.

PROCESS WASTEWATER SOURCES

The principal sources of wastewater in the primary zinc subcategory are:

1. Wet air pollution control on reduction furnaces,
2. Preleach wastewater,
3. Wet air pollution control on leaching process,
4. Electrolyte bleed wastewater,
5. Cathode and anode washing,
6. Casting contact cooling water,
7. Casting wet air pollution control, and
8. Cadmium plant wastewater.

OTHER WASTEWATER SOURCES

There are other wastewater streams associated with the manufacture of primary zinc. These wastewater streams may include; water from residue washings, storm water runoff, water from pelletizing process, water from briquetting process, air pollution control on concentrate dryers, zinc purification process, and maintenance and clean up water. These wastewater streams are not considered as a part of this rule making. EPA believes that the flows and pollutant loadings associated with these waste streams are insignificant relative to the waste

streams selected and are best handled by the appropriate permit authority on a case-by-case basis under authority of Section 402 of the CWA.

In the dcp, two plants report using Venturi scrubbers to control air emissions from the drying of zinc concentrates prior to roasting. Plant 282 reports it operates this scrubber approximately 30 days per year and the scrubber is a net user of water. Plant 283 reports reusing scrubber liquor common to both the ore dryer scrubber and roaster scrubbing system. In this way, the ore dryer scrubber at this plant does not use source water as makeup to the system. Since both existing concentrate drying scrubbers are net users of water, a building block was not provided for this process. In addition, EPA received no comments concerning concentrate drying wet air pollution control. This waste stream will not be discussed in the remainder of this document.

AGE, PRODUCTION, AND PROCESS PROFILE

A distribution of primary zinc plants in the United States is shown in Figure III-5 (page 1493). Primary zinc or zinc oxide is produced electrolytically by four plants and pyrolytically by four plants; cadmium is a by-product at six plants.

Table III-1 (page 1486) indicates that the average plant age is about 50 years. Table III-2 (page 1487) shows that the average size plant has a production less than 100,000 tons per year. Table III-3 (page 1488) provides a summary of the plants having the various primary zinc processes. The number of plants generating wastewater from the processes is also shown.

Table III-1

INITIAL OPERATING YEAR (RANGE) SUMMARY OF PLANTS
IN THE PRIMARY ZINC SUBCATEGORY BY DISCHARGE TYPE

Type of Plant Discharge	Plant Age Range (Years) 1983-1959 0-25	1958-1949 25-35	1948-1939 35-45	1938-1929 45-55	1928-1919 55-65	1918-1904 65-80	1903-1879 80-105	Before 1879 105+	Insuff. Data	Total
Direct	1	0	1	1	0	0	0	0	0	3
Indirect	0	0	0	0	1	0	0	0	0	1
Zero	0	2	0	0	1	0	1	0	1	5
Total	1	2	1	1	2	0	1	0	1	9

TABLE III-2

PRODUCTION RANGES FOR THE PRIMARY ZINC SUBCATEGORY

Production Range (tons/yr)	Number of Plants
Less than 100000	5
100001 - 200000	3
Total plants surveyed	8

NOTE: Production data for one plant was not availabale

TABLE III-3

SUMMARY OF PRIMARY ZINC PROCESSES AND ASSOCIATED WASTE STREAMS

Process	Number of Plants With Process	Number of Plants Generating Wastewater
Preleaching	2	1
Roasting	9 (a)	0
Sulfuric Acid Production	6	6
Sintering	1	1
Zinc Reduction	1	-
-Air Pollution Control	1	1
Leaching	5	1
-Air Polllution Control	4	3
Purification	4	1
Electrolysis	4	-
-Electrolyte Bleed	1	1
-Anode and Cathode wash	3	3
Casting	5	-
-Casting Contact Cooling	4	3
-Air Pollution Control	3	0
Cadmium Plant	6	4

NOTE: Through reuse or evaporation practices, a plant may generate a wastewater from a particular process but not discharge it.

(a) One plant only purifies zinc oxide.

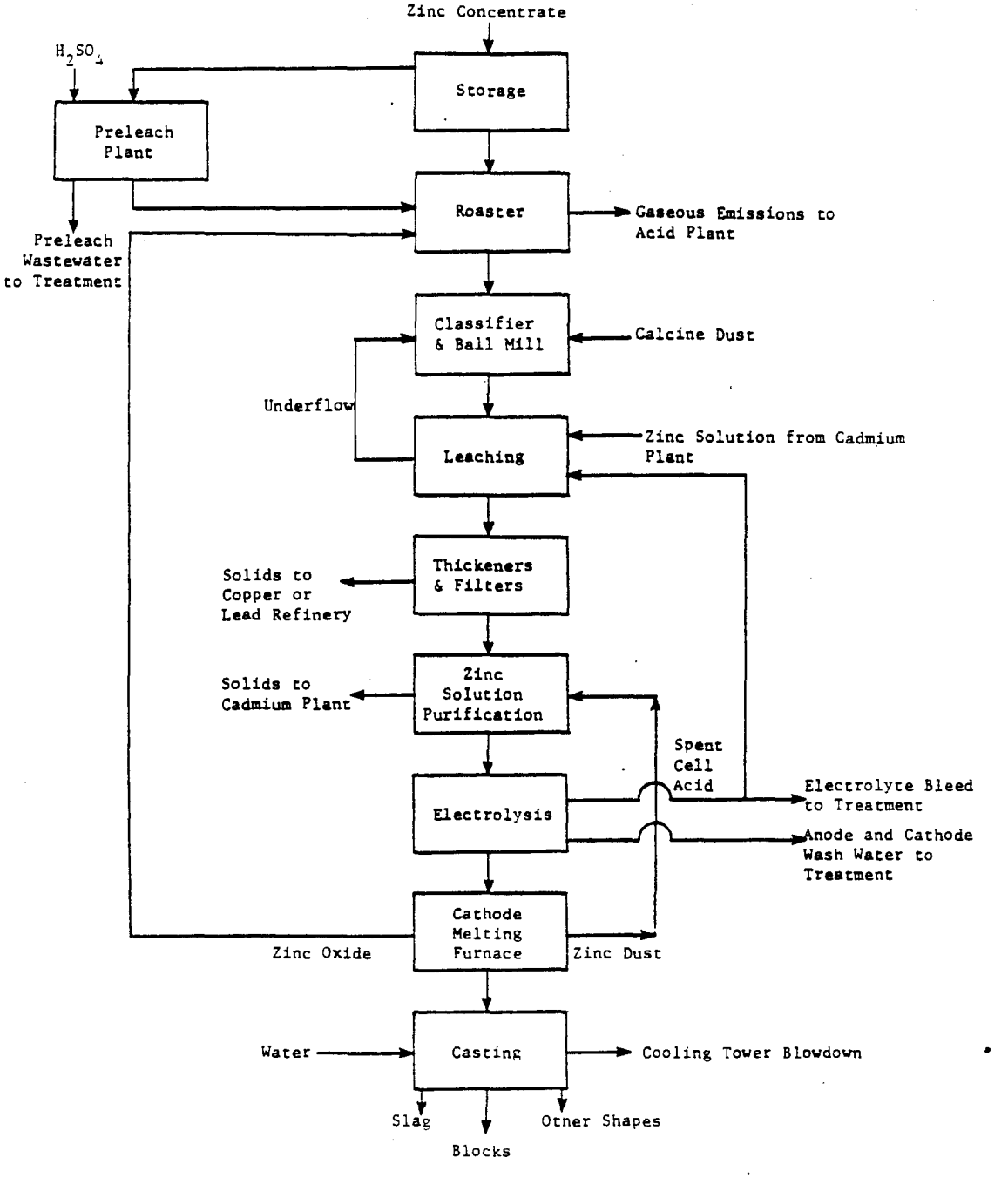

FIGURE III-1

ELECTROLYTIC ZINC PRODUCTION PROCESS

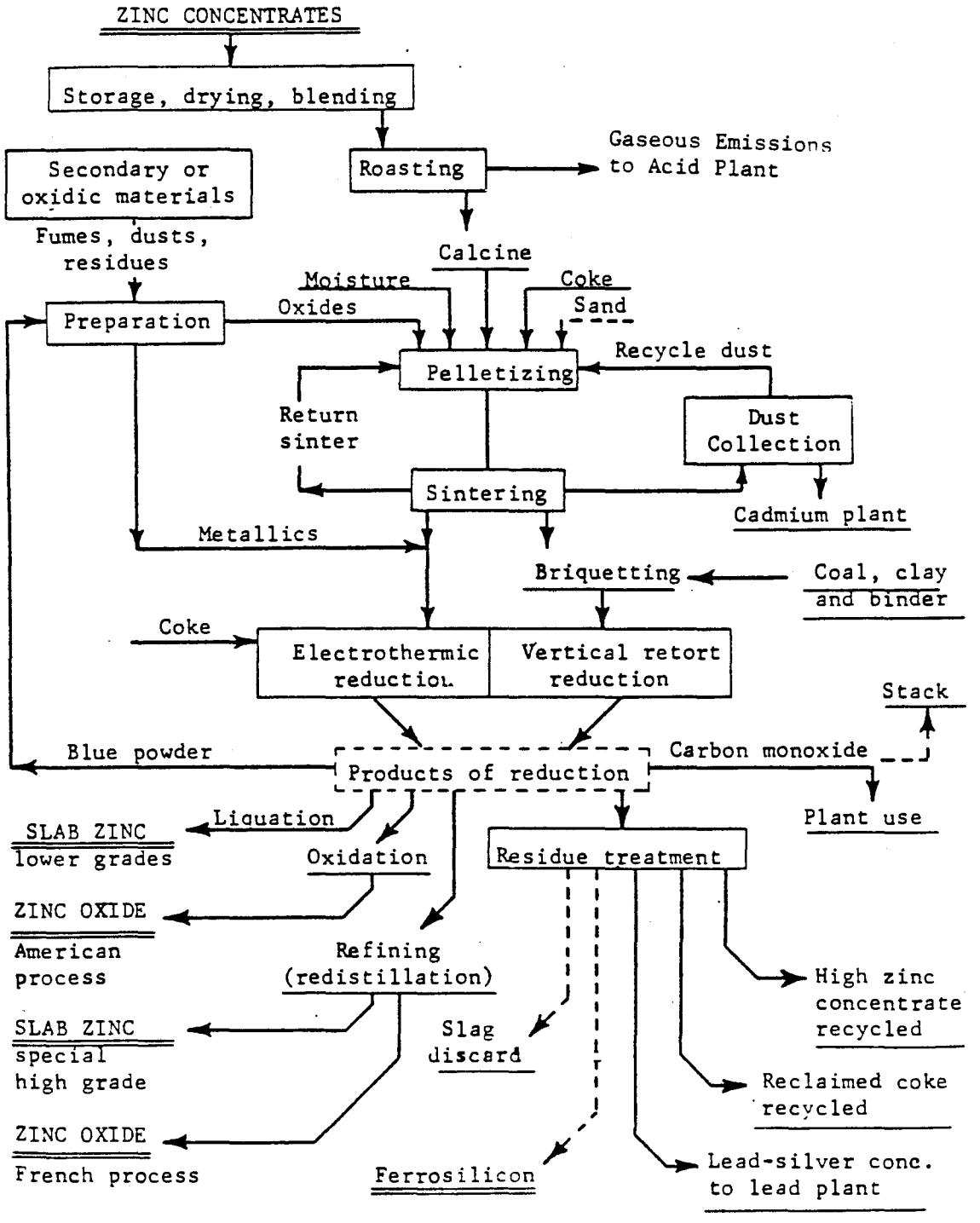

FIGURE III-2

GENERALIZED FLOWSHEET OF PYROLYTIC ZINC PLANTS

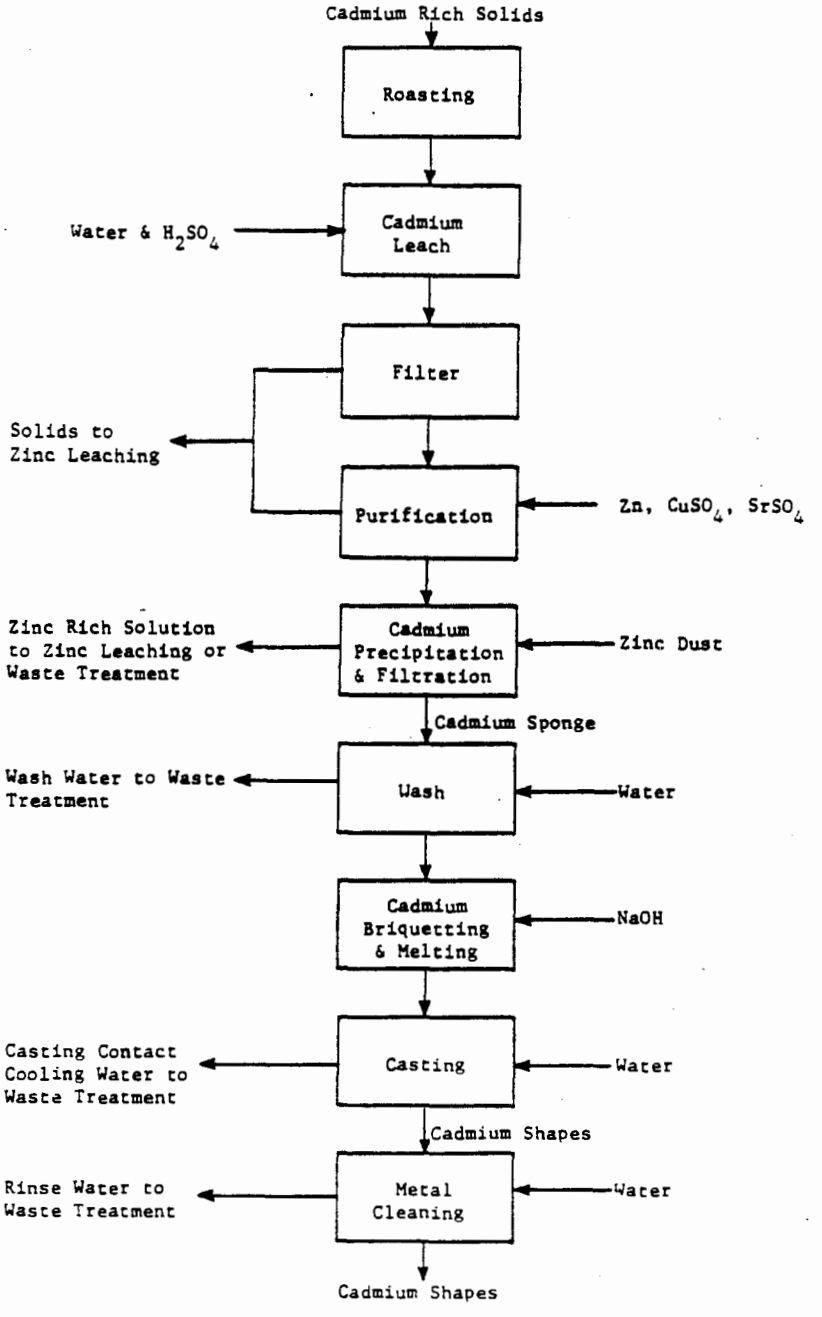

FIGURE III-3

PYROMETALLURGICAL CADMIUM PRODUCTION PROCESS

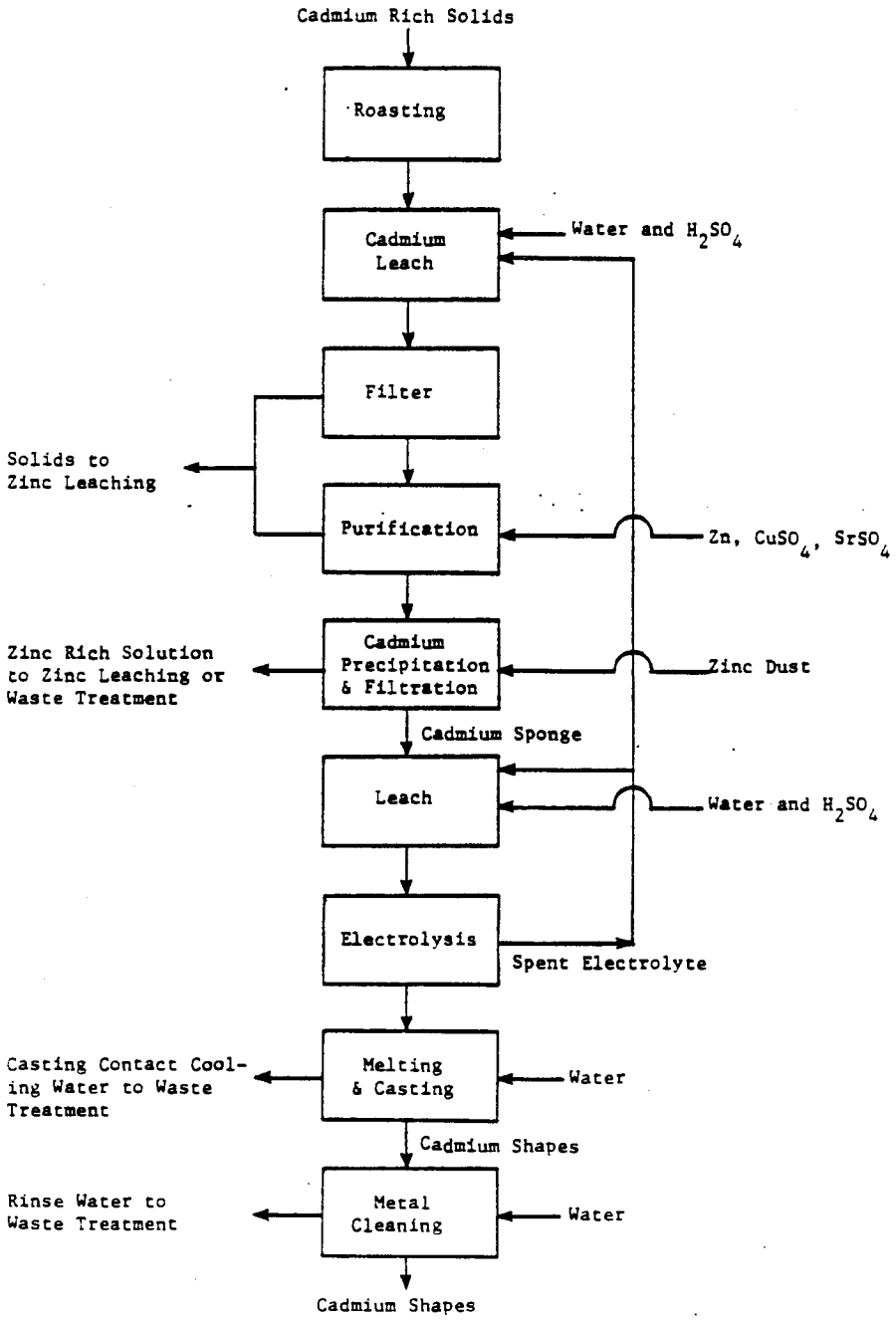

FIGURE III-4

HYDROMETALLURGICAL CADMIUM PRODUCTION PROCESS

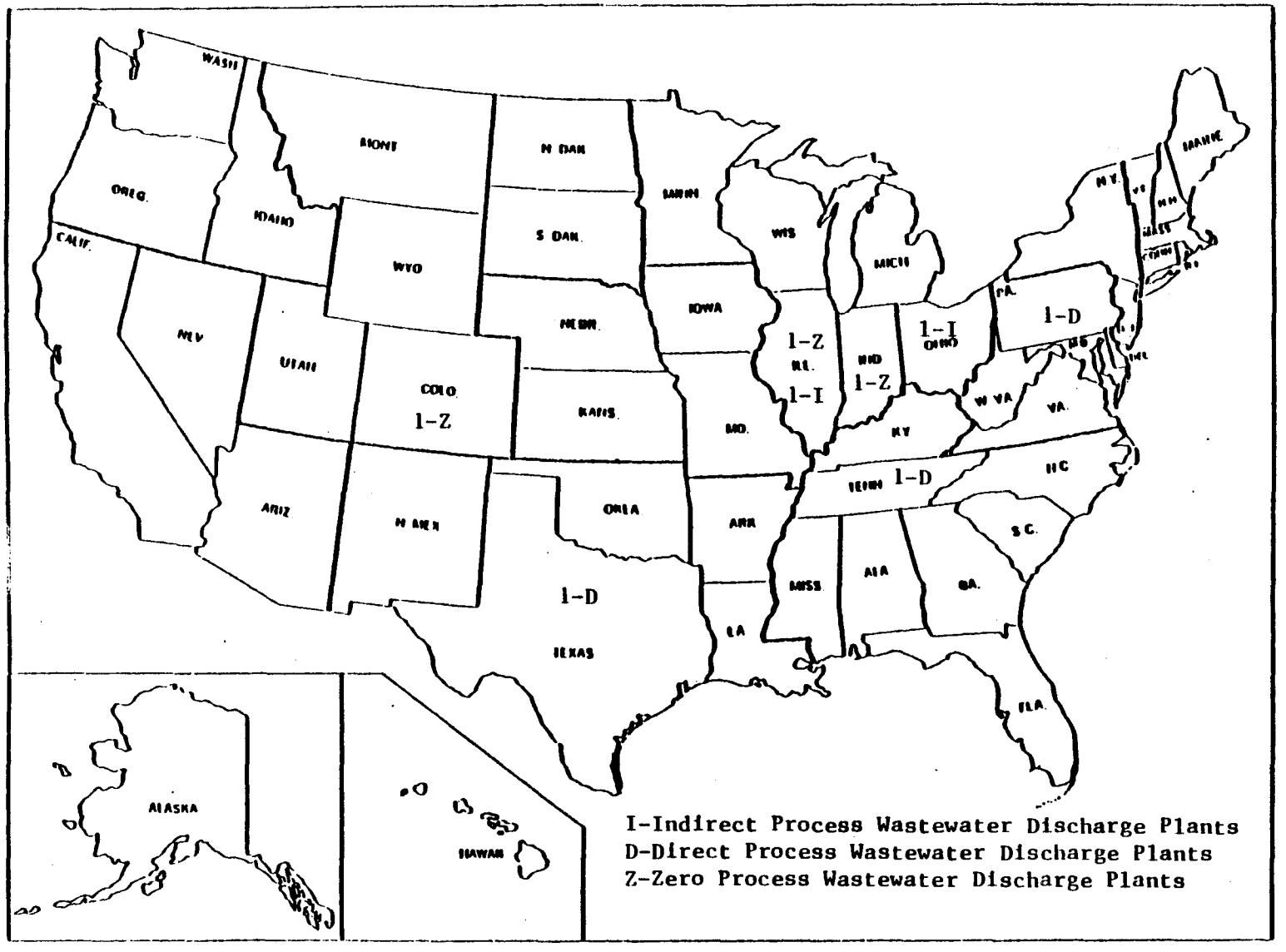

FIGURE III-5

GEOGRAPHIC LOCATIONS OF PRIMARY ZINC PLANTS

Page Intentionally Blank

SECTION IV

SUBCATEGORIZATION

This section summarizes the factors considered during the designation of the primary zinc subcategory and its related subdivisions. Primary zinc was considered as a single subcategory during the previous 1975 rulemaking. The rulemaking established BPT and BAT effluent limitations for the primary zinc subcategory. The purpose of this rulemaking is to promulgate modifications to the BAT effluent limitations, and to establish NSPS, PSES, and PSNS.

FACTORS CONSIDERED IN SUBDIVIDING THE PRIMARY ZINC SUBCATEGORY

The factors listed for general subcategorization were each evaluated when considering subdivision of the primary zinc subcategory. In the discussion that follows, the factors will be described as they pertain to this particular subcategory.

The rationale for considering segmentation of the primary zinc subcategory is based primarily on the production process used. Within this subcategory, a number of different operations are performed, which may or may not have a water use or discharge, and which may require the establishment of separate effluent limitations and standards. While primary zinc is still considered a single subcategory, a more thorough examination of the production processes, has illustrated the need for limitations and standards based on a specific set of wastewater streams. Limitations and standards will be based on specific flow allowances for the following building blocks:

1. Zinc reduction furnace wet air pollution control,
2. Preleach wastewater,
3. Leaching wet air pollution control,
4. Electrolyte bleed wastewater,
5. Cathode and anode washing wastewater,
6. Casting wet air pollution control,
7. Casting contact cooling, and
8. Cadmium plant wastewater.

OTHER FACTORS

A number of other factors considered in this evaluation were shown to be inappropriate bases for further segmentation. These are discussed briefly below.

TYPE OF PLANT

As discussed in Section III, there are two types of production processes used in the primary zinc subcategory: electrolytic and pyrolytic. Initially, it was thought that the primary zinc subcategory should be divided into two segments, electrolytic and pyrolytic. This segmentation is too general. It is the

individual operations such as electrolysis and zinc reduction which produce wastewater. The wastewaters from these operations have distinctly different characteristics. Pyrolytic and electrolytic zinc production share common operations such as roasting, casting, and cadmium production. Thus, pyrolytic and electrolytic zinc production are not totally different. Individual operations such as leaching, casting, and zinc reduction are distinctly different. Accordingly, the building blocks used to segment the subcategory are determined by individual operations which produce significant amounts of wastewater, not by plant type.

PLANT SIZE

It is difficult to categorize zinc plants on the basis of size. The individual processes involved in zinc production often produce different amounts of zinc-bearing material. Therefore, it is more appropriate to categorize zinc plants on the basis of process production e.g., leaching production. The production normalizing parameter for the primary zinc subcategory is process production. Thus, process size is an important parameter in determining the production normalized flow (PNF), which is the flow divided by production, values of the eight zinc building blocks.

PRODUCTION NORMALIZING PARAMETERS

The effluent limitations and standards developed in this document establish mass limitations on the discharge of specific pollutant parameters. To allow these regulations to be applied to plants with various production capacities, the mass of pollutant discharged must be related to a unit of production. This factor is known as the production normalizing parameter (PNP).

In general, for each production process which has wastewater associated with it, the actual mass of zinc product will be used as the PNP. The PNP's for the eight subdivisions are as follows:

	Building Block	PNP
1.	Zinc reduction furnace Wet air pollution control	kkg of zinc reduced
2.	Preleach wastewater	kkg of concentrate leached
3.	Leaching wet air pollution control	kkg of zinc processed through leaching
4.	Electrolyte bleed wastewater	kkg of cathode zinc produced
5.	Cathode and anode washing wastewater	kkg of cathode zinc produced

6.	Casting wet air pollution control	kkg of zinc cast
7.	Casting contact cooling	kkg of zinc cast
8.	Cadmium plant wastewater	kkg of cadmium produced

Page Intentionally Blank

SECTION V

WATER USE AND WASTEWATER CHARACTERISTICS

This section describes the characteristics of wastewater associated with the primary zinc subcategory. Data used to quantify wastewater flow and pollutant concentrations are presented, summarized, and discussed. The contribution of specific production processes to the overall wastewater discharge from primary zinc plants is identified whenever possible.

Two principal data sources were used in the development of effluent limitations and standards for this subcategory: data collection portfolios and field sampling results. Data collection portfolios contain information regarding wastewater flows and production levels. Data gathered through comments on the proposed mass limitations and Section 308 requests are also principal data sources.

In order to quantify the pollutant discharge from primary zinc plants, a field sampling program was conducted. Wastewater samples were collected in two phases: screening and verification. The first phase, screen sampling, was to identify which toxic pollutants were present in the wastewaters from production of the various metals. Screening samples were analyzed for 125 of the 126 toxic pollutants and other pollutants deemed appropriate. (Because the analytical standard for TCDD was judged to be too hazardous to be made generally available, samples were never analyzed for this pollutant. There is no reason to expect that TCDD would be present in primary zinc wastewater). A total of 10 plants were selected for screen sampling in the nonferrous metals manufacturing category. A complete list of the pollutants considered and a summary of the techniques used in sampling and laboratory analyses are included in Section V of the General Development Document. In general, the samples were analyzed for three classes of pollutants: toxic organic pollutants, toxic metal pollutants, and criteria pollutants (which includes both conventional and nonconventional pollutants). A verification sampling effort was conducted at one primary zinc plant between proposal and promulgation. EPA believed additional process and wastewater data were needed to better characterize the subcategory.

As described in Section IV of this supplement, the primary zinc subcategory has been further segmented into eight subdivisions or building blocks, so that the regulation contains mass discharge limitations and standards for eight unit processes discharging process wastewater. Differences in the wastewater characteristics associated with these building blocks are to be expected. For this reason, wastewater streams corresponding to each segment are addressed separately in the discussions that

follow.

WASTEWATER SOURCES, DISCHARGE RATES, AND CHARACTERISTICS

The wastewater data presented in this section were evaluated in light of production process information compiled during this study. As a result, it was possible to identify the principal wastewater sources in the primary zinc subcategory. These include:

1. Zinc reduction furnace wet air pollution control,
2. Preleach wastewater,
3. Leaching wet air pollution control,
4. Electrolyte bleed wastewater,
5. Cathode and anode washing wastewater,
6. Casting wet air pollution control,
7. Casting contact cooling, and
8. Cadmium plant wastewater.

Data supplied by dcp responses were evaluated, and two flow-to-production ratios were calculated for each stream. The two ratios, water use and wastewater discharge flow, are differentiated by the flow value used in calculation. Water use is defined as the volume of water or other fluid (e.g., emulsions, lubricants) required for a given process per mass of zinc product and is therefore based on the sum of recycle and make-up flows to a given process. Wastewater flow discharged after pretreatment or recycle (if these are present) is used in calculating the production normalized flow -- the volume of wastewater discharged from a given process to further treatment, disposal, or discharge per mass of zinc produced. Differences between the water use and wastewater flows associated with a given stream result from recycle, evaporation, and carryover on the product. The production values used in calculation correspond to the production normalizing parameter, PNP, assigned to each stream, as outlined in Section IV. The production normalized flows were compiled and statistically analyzed by stream type. Where appropriate, an attempt was made to identify factors that could account for variations in water use. This information is summarized in this section. A similar analysis of factors affecting the wastewater values is presented in Sections X, XI and XII where representative BAT, BDT, and pretreatment discharge flows are selected for use in calculating the effluent limitations and standards. As an example, zinc reduction furnace scrubbing wastewater flow is related to reduction furnace production. As such, the discharge rate is expressed in liters of scrubber wastewater produced per metric ton of zinc reduced.

Since the data collection portfolios have been collected, the Agency has learned that two primary zinc facilities have shut down. Flow and production data (when available) for these plants are presented in this section and in the remainder of this supplement. Analytical data gathered at these plants are also presented. Although the plants are closed, these data are an integral part of the BAT effluent limitations because these

plants were representative processes and provide useful measures of the relationship between production and discharge. Therefore, it is appropriate to present this information.

In order to quantify the concentrations of pollutants present in wastewater from primary zinc plants, wastewater samples were collected at six of the zinc plants before proposal. After proposal, a seventh plant was sampled. Diagrams indicating the sampling sites and contributing production processes are shown in Figures V-1 through V-7 (pages 1576 - 1582).

The raw wastewater sampling data for the primary zinc subcategory are presented in Tables V-7 through V-9 (pages 1509 - 1526). Miscellaneous waste-water sampling data are presented in Tables V-10 through V-12 (pages 1528 - 1542). Treated wastewater sampling data are shown in Tables V-13 through V-18 (pages 1552 - 1564). The stream codes displayed in Tables V-7 through V-18 may be used to identify the location of each of the samples on the process flow diagrams in Figures V-1 through V-7. Where no data is listed for a specific day of sampling, the wastewater samples for the stream were not collected. If the analysis did not detect a pollutant in a wastestream, the pollutant was omitted from the table.

The data tables include some samples measured at concentrations considered not quantifiable. The base-neutral extractable, acid extractable, and volatile organics are generally considered not quantifiable at concentrations equal to or less than 0.010 mg/l. Below this concentration organic analytical results are not quantitatively accurate; however, the analyses are useful to indicate the presence of a particular pollutant. The pesticide fraction is considered not quantifiable at concentrations equal to or less than 0.005 mg/l. Nonquantifiable results are designated in the tables with an asterisk (double asterisk for pesticides).

These detection limits shown on the data tables are not the same in all cases as the published detection limits for these pollutants by the same analytical methods. The detection limits used were reported with the analytical data and hence are the appropriate limits to apply to the data. Detection limit variation can occur as a result of a number of laboratory-specific, equipment-specific, and daily operator-specific factors. These factors can include day-to-day differences in machine calibration, variation in stock solutions, and variation in operators.

The statistical analysis of data includes some samples measured at concentrations considered not quantifiable. Data reported as an asterisk are considered as detected but below quantifiable concentrations, and a value of zero is used for averaging. Toxic organic, nonconventional and conventional pollutant data reported with a "less than" sign are considered as detected, but not further quantifiable. A value of zero is also used for averaging. If a pollutant is reported as not detected, it is

excluded in calculating the average. Finally, toxic metal values reported as less than a certain value were considered as not detected and a value of zero is used in the calculation of the average. For example, three samples reported as ND, *, and 0.021 mg/l have an average value of 0.010 mg/l. The averages calculated are presented with the sampling data; these values were not used in the selection of pollutant parameters.

The method by which each sample was collected is indicated by number, as follows.

1 one-time grab
2 24-hour manual composite
3 24-hour automatic composite
4 48-hour manual composite
5 48-hour automatic composite
6 72-hour manual composite
7 72-hour automatic composite
8 8-hour manual composite

In the data collection portfolios, plants were asked to indicate whether or not any of the toxic pollutants were believed to be present in their wastewater. Responses for the toxic metals chosen as pollutant parameters are summarized below for those plants responding to that portion of the questionnaire.

Pollutant	Known Present	Believed Present	Believed Absent	Known Absent
Arsenic	4	2	0	0
Cadmium	6	0	0	0
Chromium	2	1	2	1
Copper	4	0	1	1
Lead	5	0	0	1
Nickel	2	1	2	1
Selenium	4	1	1	0
Silver	2	2	2	0
Zinc	6	0	0	0

ZINC REDUCTION FURNACE WET AIR POLLUTION CONTROL

In pyrolytic zinc plants, zinc oxide is reduced to metallic zinc in vertical retort or electrothermic furnaces. Zinc vapor and carbon monoxide enter a water cooled condenser through a vapor ring. Most of the zinc is condensed while the carbon monoxide and uncondensed zinc pass into air pollution control equipment. One pyrolytic plant uses a scrubber to treat the carbon monoxide and uncondensed zinc. The carbon monoxide may be recovered for use as a fuel and the zinc may be recovered at the plant's wastewater treatment system. Zinc reduction furnace wet air pollution control water use and discharge rates are in liters per metric ton of zinc reduced as shown in Table V-1 (page 1506).

Table V-17 (page 1559) summarizes the field sampling data for the toxic and selected conventional and nonconventional pollutants detected. The Agency did not collect any raw wastewater samples from the reduction furnace scrubbers at either of the two pyrolytic zinc plants with wet scrubbers on zinc reduction furnaces. However, treatment plant samples were collected. As shown by Table V-17, zinc reduction furnace scrubbing wastewater may contain treatable concentrations of zinc, cadmium, and other toxic metals.

The treatment plant samples contained wastewater from the reduction furnaces, contact cooling, and leaching. No samples of the individual streams were taken because these streams were inaccessible. Therefore, it is necessary to assume that each stream exhibits similar characteristics.

PRELEACH WASTEWATER

Preleaching of zinc concentrates to control magnesium in the electrolytic circuit is practiced currently at one electrolytic zinc plant. Another plant with a preleach circuit is currently not in operation. The plant operating this process discharges 901 l/kkg (216 gal/ton) of concentrate leached. Wastewater samples for this waste stream were not collected by the Agency.

However, data for seven parameters taken over a two-week period were submitted by the plant with this wastewater. These data are included in the administrative record supporting this regulation. Preleach wastewater contains treatable concentrations of arsenic, cadmium, lead, zinc, and total suspended solids. This stream is also strongly acidic (pH of approximately 2.5).

LEACHING WET AIR POLLUTION CONTROL

Three electrolytic plants report the use of contact scrubbers to reduce leaching air emissions. The water use and discharge rates reported for leaching wet air pollution control, in liters per metric ton of zinc processed through leaching, are shown in Table V-2 (page 1506). Two of the three plants report no discharge from leaching wet air pollution control. The Agency did not collect any raw wastewater or treatment plant samples from leaching scrubbers. Waste streams from leaching scrubbers should contain various toxic metals based on the raw materials and process used.

ELECTROLYTE BLEED WASTEWATER

One electrolytic plant bleeds a portion of the spent electrolyte after electrolysis to control magnesium. This plant discharges 432 l/kkg (104 gal/ton) of cathode zinc produced. Wastewater sampling data for this stream is presented in Table V-7 (page 1509). This wastewater is characterized by treatable concentrations of chromium, zinc, and total suspended solids. Electrolyte bleed is strongly acidic with a pH of approximately 1.0.

CATHODE AND ANODE WASHING WASTEWATER

Three plants in this subcategory currently produce a waste stream associated with the washing of cathodes and anodes. The water use and discharge rates from these plants are presented in liters per metric ton of cathode zinc produced in Table V-3 (page 1507). Wastewater sampling data for cathode and anode wash water are presented in Table V-8 (page 1513). This wastewater contains treatable concentrations of chromium, copper, lead, zinc, total suspended solids, and oil and grease. The waste stream is also acidic with a pH of approximately 2.5.

CASTING WET AIR POLLUTION CONTROL

In the electrolytic production of zinc, the stripped cathode zinc must be melted prior to casting. Three plants report the use of air pollution control equipment to clean the off-gases from the casting furnace. One plant which is now shut down used a wet scrubber. All three plants use dry air pollution control equipment. The water use and discharge rate for the scrubber was 2,580 liters per metric ton of zinc cast, as shown in Table V-4 (page 1507).

Raw wastewater samples were collected from a waste stream which contained wastewater from the casting furnace scrubber. The waste stream is characterized by the presence of treatable concentrations of toxic metals and suspended solids. The raw wastewater data are shown in Table V-9 (page 1526).

CASTING CONTACT COOLING

Contact cooling water may be used for casting. The cooling water may be recycled but a bleed stream (blowdown) may be required to dissipate the build-up of dissolved solids. The water use and discharge rates for casting contact cooling, in liters per metric ton of zinc cast, are shown in Table V-5 (page 1508). One plant evaporates all of its cooling water in an evaporation pond. Another plant uses noncontact cooling water and contact water sprays. The contact water completely evaporates on contact with the zinc metal. Other plants report partial evaporation when the water contacts the cast zinc. None of the plants report recycling of contact cooling water. Tables V-14 (page 1554) and V-17 (page 1559) present data on the composition of waste streams which contain contact cooling wastewater. These streams may contain treatable concentrations of several toxic metals.

CADMIUM PLANT WASTEWATER

Six zinc plants currently have the technology in place to recover cadmium as a by-product. Wastewater from cadmium plants may originate from various sources such as rinsing cadmium balls, casting contact cooling, cadmium sponge washing, or discharging leaching tank water. Four plants report waste streams generated by their cadmium recovery process. The water use and discharge

rates for the cadmium plants, in liters per metric ton of cadmium produced, are shown in Table V-6. Treatment plant samples were taken from a stream which contained cadmium plant wastewater. This stream contained treatable concentrations of cadmium, lead, selenium, and zinc. Data from the samples are shown in Table V-17 (page 1559).

TABLE V-1

WATER USE AND DISCHARGE RATES FOR ZINC REDUCTION FURNACE
WET AIR POLLUTION CONTROL
(l/kkg of Zinc Reduced)

Plant Code	Percent Recycle	Production Normalized Water Use FLow	Production Normalized Discharge Flow
282*	100	NR	0
283	87.7	16340	2002

TABLE V-2

WATER USE AND DISCHARGE RATES FOR LEACHING
WET AIR POLLUTION CONTROL
(l/kkg of Zinc Processes Through Leaching)

Plant Code	Percent Recycle	Production Normalized Water Use FLow	Production Normalized Discharge Flow
279	NR	NR	NR
281	100	667	0**
283	100	8607	0

NR - data not reported in dcp.

* - Plant currently produces only zinc oxide. Zinc reduction furnace not operating

** - 100 percent evaporation

TABLE V-3

WATER USE AND DISCHARGE RATES FOR CATHODE AND ANODE WASHING WASTEWATER
(l/kkg of Cathode Zinc Produced)

Plant Code	Percent Recycle	Production Normalized Water Use FLow	Production Normalized Discharge Flow
278	NR	NR	NR
280*	NR	NR	NR
281	NR	NR	19850
9060	0	751	751

TABLE V-4

WATER USE AND DISCHARGE RATES FOR CASTING WET AIR POLLUTION CONTROL
(l/kkg of Zinc Cast)

Plant Code	Percent Recycle	Production Normalized Water Use FLow	Production Normalized Discharge Flow
280*	0	2570	2570

NR - not reported in dcp

* - plant closed

TABLE V-5

WATER USE AND DISCHARGE RATES FOR
CASTING CONTACT COOLING
(l/kkg of Zinc Cast)

Plant Code	Percent Recycle	Production Normalized Water Use FLow	Production Normalized Discharge Flow
279	0	NR	NR
280 (a)	0	4366	4366
281	0	1050	0 (b)
283	0	50	2.1 (c)
9030	0	NR	0 (d)

Notes:
(a) - Plant Closed
(b) - 100 percent evaporation in evaporation pond
(b) - 96 percent evaporation while cooling
(d) - Spray water 100 percent evaporated on contact with metal
NR - Not reported in dcp

TABLE V-6

WATER USE AND DISCHARGE RATES FOR CADMIUM PLANT WASTEWATER
(l/kkg of Cadmium Produced)

Plant Code	Percent Recycle	Production Normalized Water Use FLow	Production Normalized Discharge Flow
279	NR	NR	NR
281	100	NR	0
282 (a)	NR	NR	450360 (b)
283	NR	NR	6171
1166	0	NR	17517

Notes:
(a) - Plant closed
(b) - Infrequent discharge
NR - Data not reported in dcp

Table V-7

ELECTROLYTE BLEED RAW WASTEWATER SAMPLING DATA

Pollutant	Stream Code	Sample Type*	Source	Concentrations (mg/l, except as noted) Day 1	Day 2	Day 3	Average
Toxic Pollutants (a)							
1. acenaphthene	322	3	ND	*	ND	ND	*
4. benzene	322	1	ND	0.018	ND	ND	0.018
11. 1,1,1-trichloroethane	322	1	*	*	*	*	*
18. bis(2-chloroethyl)ether	322	3	ND	*	*	ND	*
21. 2,4,6-trichlorophenol	322	3	ND	*	ND	ND	*
22. p-chloro-m-cresol	322	3	0.040	ND	ND	ND	
23. chloroform	322	1	0.013	*	*	*	*
38. ethylbenzene	322	1	0.049	ND	0.044	ND	0.044
39. fluoranthene	322	3	ND	*	ND	ND	*
43. bis(2-chloroethoxy)methane	322	3	ND	0.020	0.013	*	0.011
47. bromoform (tribromomethane)	322	1	*	*	*	*	*
57 2-nitrophenol	322	3	*	*	ND	ND	*
58. 4-nitrophenol	322	3	ND	*	ND	ND	*
62. N-nitrosodiphenylamine	322	3	ND	*	ND	ND	*
65. phenol	322	3	ND	*	ND	ND	*
66. bis(2-ethylhexyl)phthalate	322	3	0.040	0.243	*	0.020	0.088
68. di-n-butyl phthalate	322	3	*	*	*	0.028	0.009
69. di-n-octyl phthalate	322	3	ND	0.012	ND	ND	0.012
70. diethyl phthalate	322	3	ND	ND	*	ND	*
76. chrysene	322	3	ND	*	ND	ND	*
80. fluorene	322	3	ND	*	ND	ND	*
81. phenanthrene	322	3	ND	*	ND	ND	*
84. pyrene	322	3	ND	*	ND	ND	*
85. tetrachloroethylene	322	1	ND	ND	ND	*	*
86. toluene	322	1	ND	ND	ND	*	*
87. trichloroethylene	322	1	*	ND	*	ND	*
95. alpha-endosulfan	322	3	ND	*	ND	ND	*

Table V-7 (Continued)

ELECTROLYTE BLEED RAW WASTEWATER SAMPLING DATA

Pollutant	Stream Code	Sample Type*	Concentrations (mg/l, except as noted) Source	Day 1	Day 2	Day 3	Average
Toxic Pollutants (a) (Continued)							
101. heptachlor epoxide	322	3	*	ND	ND	*	*
102. alpha-BHC	322	3	ND	ND	ND	*	*
103. beta-BHC	322	3	*	ND	*	*	*
104. gamma-BHC	322	3	ND	ND	*	ND	*
105. delta-BHC	322	3	ND	*	ND	ND	*
114. antimony	322	3	<0.01	0.03	<0.10 (b)	<0.10 (b)	0.01
115. arsenic	322	3	<0.01	<0.01	<0.01	<0.01	<0.01
117. beryllium	322	3	<0.005	<0.1	<0.1	<0.1	<0.1
118. cadmium	322	3	<0.02	<0.4	<0.4	<0.4	<0.4
119. chromium (total)	322	3	<0.02	<0.4	0.8	1.2	0.7
120. copper	322	3	<0.05	<1.0	<1.0	<1.0	<1.0
121. cyanide (total)	322	1	<0.02	<0.02	<0.02	0.02	0.01
122. lead	322	3	<0.05	<10.0	<10.0	<1.0	<7.0
123. mercury	322	3	<0.001	<0.001	<0.001	<0.001	<0.001
124. nickel	322	3	<0.05	<1.0	<1.0	<1.0	<1.0
125. selenium	322	3	<0.05 (b)	(c)	(c)	(c)	
126 silver	322	3	<0.01	0.01	0.01	<0.01	0.01
127 thallium	322	3	<0.01	(c)	<0.02 (b)	(c)	
128. zinc	322	3	0.06	20,700.0	24,000.0	22,300.0	22,333.0
Nonconventional Pollutants							
acidity	322	3	<1	252,000	254,000	257,000	254,000
alkalinity	322	3	73	<1	<1	<1	<1
aluminum	322	3	<0.10	10.0	12.0	12.0	11.3
ammonia nitrogen	322	3	<1	10	24	5.5	13

Table V-7 (Continued)

ELECTROLYTE BLEED RAW WASTEWATER SAMPLING DATA

Pollutant	Stream Code	Sample Type*	Concentrations (mg/l, except as noted) Source	Day 1	Day 2	Day 3	Average
Nonconventional Pollutants (Continued)							
barium	322	3	<0.05	<1.0	<1.0	<1.0	<1.0
boron	322	3	<0.10	2.0	2.0	2.0	2.0
calcium	322	3	37.2	364.0	338.0	374.0	358.6
chemical oxygen demand (COD)	322	3	<1	8	<1	11	6.3
chloride	322	3	5	38	98	84	73
cobalt	322	3	<0.05	<1.0	<1.0	<1.0	<1.0
fluoride	322	3	0.1	1.5	1.3	1.5	1.4
iron	322	3	0.30	<1.0	<1.0	2.0	0.6
magnesium	322	3	5.50	12,100.0	11,900.0	11,600.0	11,833.3
manganese	322	3	<0.05	1,860.0	1,780.0	1,800.0	1,813.3
molybdenum	322	3	<0.05	<1.0	<1.0	<1.0	<1.0
phenolics	322	1	<0.005	<0.005	0.01	<0.005	0.003
phosphate	322	3	0.26	<0.01	<0.01	<0.03	0.016
sodium	322	3	4.10	386.0	386.0	390.0	387.3
sulfate	322	3	36	277,000	276,000	112,000	222,000
tin	322	3	0.50	<10.0	<10.0	<10.0	<10.0
titanium	322	3	<0.05	<1.0	<1.0	<1.0	<1.0
total dissolved solids (TDS)	322	3	189	<364,000	307,000	<370,000(d)	102,000
total organic carbon (TOC)	322	3	3	39	18	15	24
total solids (TS)	322	3	200	<305,000(d)	<368,000(d)	<334,000(d)	<336,000
vanadium	322	3	<0.05	<1.0	<1.0	<1.0	<1.0
yttrium	322	3	<0.05	<1.0	<1.0	<1.0	<1.0

Table V-7 (Continued)

ELECTROLYTE BLEED RAW WASTEWATER SAMPLING DATA

Pollutant	Stream Code	Sample Type*	Source	Concentrations (mg/l, except as noted) Day 1	Day 2	Day 3	Average
Conventional Pollutants							
oil and grease	322	1	3	4	<1	3	2.3
total suspended solids (TSS)	322	3	1	1,470	1,600	1,324	1,464
pH (standard units)	322	3	6	0.7	1.0	1.0	

*Sample Type - Note: These numbers also apply to subsequent sampling data tables.

1 - one-time grab
2 - 24-hour manual composite
3 - 24-hour automatic composite
4 - 48-hour manual composite
5 - 48-hour automatic composite
6 - 72-hour manual composite
7 - 72-hour automatic composite
8 - 8-hour manual composite

(a) All toxic pollutant fractions were analyzed
(b) Detection limit raised due to interference
(c) Interference
(d) Sulfuric acid interference

Table V-8

CATHODE BRUSH WATER AND ANODE CLEANING WATER
RAW WASTEWATER SAMPLING DATA

Pollutant (a)	Stream Code	Sample Type*	Concentrations (mg/l, except as noted) Source	Day 1	Day 2	Day 3	Average
Toxic Pollutants							
1. acenaphthene	331	8		*	ND		*
	332	8			ND	ND	
	323	2		ND	ND	ND	
4. benzene	331	1		0.019	ND		0.019
	332	1			ND	ND	
	323	1		ND	ND	ND	
11. 1,1,1-trichloroethane	331	1	*	*	*		*
	332	1	*		*	*	*
	323	1	*	*	0.017	*	0.005
22. p-chloro-m-cresol	331	8	0.040	ND	ND		
	332	8	0.040		ND	ND	
	323	2	0.040	ND	0.014	0.042	0.035
23. chloroform	331	1	0.013	0.011	ND		0.011
	332	1	0.013		*	*	*
	323	1	0.013	*	*	*	*
34. 2,4-dimethylphenol	331	8		*	ND		*
	332	8			*	*	*
	323	2	ND		ND	ND	
36. 2,6-dinitrotoluene	331	8		*	ND		*
	332	8			ND	ND	
	323	2		ND	ND	ND	

Table V-8 (Continued)

CATHODE BRUSH WATER AND ANODE CLEANING WATER
RAW WASTEWATER SAMPLING DATA

Pollutant (a)	Stream Code	Sample Type*	Source	Concentrations (mg/l, except as noted) Day 1	Day 2	Day 3	Average
Toxic Pollutants (Continued)							
38. ethylbenzene	331	1	0.049	ND	0.051		0.051
	332	1	0.049		ND	ND	
	323	1	0.049	ND	0.051	ND	0.051
44. methylene chloride	331	1	0.013	0.032	0.016		0.024
	332	1	0.013		0.015	*	0.007
	323	1	0.013	0.018	0.017	0.015	0.016
47. bromoform (tribromomethane)	331	1		*	*		*
	332	1			*	*	*
	323	1		ND	*	*	*
48. dichlorobromomethane	331	1		ND	ND		
	332	1			ND	ND	
	323	1		*	ND	ND	*
56. nitrobenzene	331	8		*	ND		*
	332	8			ND	ND	
	323	2		*	ND	ND	*
57. 2-nitrophenol	331	8	*	ND	ND		
	332	8	*		ND	*	*
	323	2	*	ND	ND	ND	

Table V-8 (Continued)

CATHODE BRUSH WATER AND ANODE CLEANING WATER
RAW WASTEWATER SAMPLING DATA

Pollutant (a)	Stream Code	Sample Type*	Concentrations (mg/l, except as noted) Source	Day 1	Day 2	Day 3	Average
Toxic Pollutants (Continued)							
62. N-nitrosodiphenylamine	331	8		ND	*		*
	332	8			ND	ND	
	323	2		*	ND	ND	*
65. phenol	331	8		*	ND		*
	332	8			ND	ND	
	323	2		*	ND	ND	*
66. bis(2-ethylhexyl)phthalate	331	8	0.040	*	*		*
	332	8	0.040		*	0.031	0.015
	323	2	0.040	*	0.012	0.010	0.007
68. di-n-butyl phthalate	331	8	*	0.015	*		0.007
	332	8	*		*	*	*
	323	2	*	*	*	*	*
70. diethyl phthalate	331	8	ND	*	ND		*
	332	8	ND		ND	ND	
	323	2	ND	*	ND	ND	*
76. chrysene	331	8		*	ND		*
	332	8			ND	ND	
	323	2		ND	ND	ND	

Table V-8 (Continued)

CATHODE BRUSH WATER AND ANODE CLEANING WATER
RAW WASTEWATER SAMPLING DATA

Pollutant (a)	Stream Code	Sample Type*	Source	Concentrations (mg/l, except as noted) Day 1	Day 2	Day 3	Average
Toxic Pollutants (Continued)							
80. fluorene	331	8		*	ND		*
	332	8			ND	ND	
	323	2		*	ND	ND	*
81. phenanthrene	331	8		ND	*		*
	332	8			ND	ND	
	323	2		ND	ND	ND	
84. pyrene	331	8		ND	ND		
	332	8			ND	ND	
	323	2		*	ND	ND	*
85. tetrachloroethylene	331	1	ND	ND	ND		
	332	1	ND		ND	*	*
	323	1	ND	ND	ND	ND	
86. toluene	331	1		ND	ND		
	332	1			ND	0.019	0.019
	323	1		ND	ND	0.016	0.016
87. trichloroethylene	331	1	*	ND	*		*
	332	1	*		*	ND	*
	323	1	*	ND	*	ND	*

Table V-8 (Continued)

CATHODE BRUSH WATER AND ANODE CLEANING WATER
RAW WASTEWATER SAMPLING DATA

Pollutant (a)	Stream Code	Sample Type*	Source	Concentrations (mg/l, except as noted) Day 1	Day 2	Day 3	Average
Toxic Pollutants (Continued)							
99. endrin aldehyde	331	8		ND	ND		
	332	8			ND	ND	
	323	2		ND	**	ND	**
100. heptachlor	331	8	ND	ND	ND		
	332	8	ND		ND	ND	
	323	2	ND	**	ND	ND	**
101. heptachlor epoxide	331	8	**	ND	ND	**	**
	332	8	**		ND		
	323	2	**	ND	ND	ND	
102. alpha-BHC	331	8	ND	**	**		**
	332	8	ND		**	**	**
	323	2	ND	ND	**	**	**
103. beta-BHC	331	8	**	**	ND		**
	332	8	**		ND	**	**
	323	2	**	**	**	ND	**
104. gamma-BHC	331	8		ND	ND		
	332	8			**	ND	**
	323	2		ND	ND	ND	

Table V-8 (Continued)

CATHODE BRUSH WATER AND ANODE CLEANING WATER
RAW WASTEWATER SAMPLING DATA

Pollutant (a)	Stream Code	Sample Type*	Concentrations (mg/l, except as noted) Source	Day 1	Day 2	Day 3	Average
Toxic Pollutants (Continued)							
113. delta-BHC	331	8		ND	ND		
	332	8			**	**	**
	323	2		ND	**	**	**
114. antimony	331	8	<0.01	<0.01	<0.01		<0.01
	332	8	<0.01		<0.01	<0.01	<0.01
	323	2	<0.01	<0.01	<0.01	<0.01	<0.01
115. arsenic	331	8	<0.01	<0.01	<0.01		<0.01
	332	8	<0.01		<0.01	<0.01	<0.01
	323	2	<0.01	0.09	0.150	0.140	0.126
117. beryllium	331	8	<0.005	<0.005	<0.005		<0.005
	332	8	<0.005		<0.005	<0.005	<0.005
	323	2	<0.005	<0.005	<0.005	<0.005	<0.005
118. cadmium	331	8	<0.02	<0.02	<0.02		<0.02
	332	8	<0.02		<0.02	<0.02	<0.02
	323	2	<0.02	<0.02	<0.02	<0.02	<0.02
119. chromium (total)	331	8	<0.02	0.04	<0.02		0.02
	332	8	<0.02		0.04	0.04	0.04
	323	2	<0.02	0.36	0.38	0.20	0.31

Table V-8 (Continued)

CATHODE BRUSH WATER AND ANODE CLEANING WATER
RAW WASTEWATER SAMPLING DATA

Pollutant (a)	Stream Code	Sample Type*	Concentrations (mg/l, except as noted) Source	Day 1	Day 2	Day 3	Average
Toxic Pollutants (Continued)							
120. copper	331	8	<0.05	1.85	2.10		1.97
	332	8	<0.05		1.55	1.55	1.55
	323	2	<0.05	0.15	0.15	0.10	0.13
121. cyanide (total)	331	1	<0.02	No data	<0.02		<0.02
	332	1	<0.02		<0.02	<0.02	<0.02
	323	1	<0.02	<0.02	<0.02	<0.02	<0.02
122. lead	331	8	<0.05	94.4	16.4		55.4
	332	8	<0.05		40.4	24.6	32.5
	323	2	<0.05	<0.05	<0.05	0.05	0.016
123. mercury	331	8	<0.001	0.001	<0.001		0.0005
	332	8	<0.001		<0.001	<0.001	<0.001
	323	2	<0.001	<0.001	<0.001	<0.001	<0.001
124. nickel	331	8	<0.05	<0.05	<0.05		<0.05
	332	8	<0.05		<0.05	<0.05	<0.05
	323	2	<0.05	0.2	0.25	0.15	0.2
125. selenium	331	8	<0.05 (c)	<0.01	<0.01		<0.01
	332	8	<0.05 (c)		<0.01	(b)	<0.01
	323	2	<0.05 (c)	<0.05 (c)	<0.05 (c)	<0.05 (c)	<0.05(c)

Table V-8 (Continued)

CATHODE BRUSH WATER AND ANODE CLEANING WATER
RAW WASTEWATER SAMPLING DATA

Pollutant (a)	Stream Code	Sample Type*	Concentrations (mg/l, except as noted) Source	Day 1	Day 2	Day 3	Average
Toxic Pollutants (Continued)							
126. silver	331	8	<0.01	0.30	0.09		0.19
	332	8	<0.01		0.15	0.180	0.165
	323	2	<0.01	0.03	0.02	0.01	0.02
127. thallium	331	8	<0.01	<0.01	<0.01		<0.01
	332	8	<0.01		<0.01	<0.01	<0.01
	323	2	<0.01	<0.01	<0.01	<0.01	<0.01
128. zinc	331	8	0.06	322.0	357.0		339.5
	332	8	0.06		296.0	259.0	227.5
	323	2	0.06	903.0	810.0	670.0	794
Nonconventional Pollutants							
acidity	331	8	<1		2,280		2,280
	332	8	<1		1,700	1,500	1,600
	323	2	<1	3,200	2,760	2,080	2,680
alkalinity	331	8	73		<1		<1
	332	8	73		<1	<1	<1
	323	2	73	<1	<1	<1	<1
aluminum	331	8	<0.10	0.40	0.30		0.35
	332	8	<0.10		0.40	0.40	0.40
	323	2	<0.10	237.0	251.0	192.0	226

Table V-8 (Continued)

CATHODE BRUSH WATER AND ANODE CLEANING WATER
RAW WASTEWATER SAMPLING DATA

Pollutant (a)	Stream Code	Sample Type*	Concentrations (mg/l, except as noted) Source	Day 1	Day 2	Day 3	Average
Nonconventional Pollutants (Continued)							
ammonia nitrogen	331	8	<1		<1		<1
	332	8	<1		1.5	3	2.25
	323	2	<1	<1	<1	<1	<1
barium	331	8	<0.05	0.15	<0.05		0.075
	332	8	<0.05		0.10	0.10	0.10
	323	2	<0.05	0.15	0.15	0.10	0.13
boron	331	8	<0.10	<0.10	<0.10		<0.10
	332	8	<0.10		<0.10	<0.10	<0.10
	323	2	<0.10	<0.10	<0.10	<0.10	<0.10
calcium	331	8	37.2	247.0	255.0		251
	332	8	37.2		207.0	189.0	198
	323	2	37.2	56.3	54.7	50.0	53.6
chemical oxygen demand (COD)	331	8	<1		13		13
	332	8	<1		15	25	20
	323	2	<1	4	21	6	10
chloride	331	8	5		5		5
	332	8	5		8	9	8
	323	2	5	5	3	5	4

Table V-8 (Continued)

CATHODE BRUSH WATER AND ANODE CLEANING WATER
RAW WASTEWATER SAMPLING DATA

Pollutant (a)	Stream Code	Sample Type*	Concentrations (mg/l, except as noted) Source	Day 1	Day 2	Day 3	Average
Nonconventional Pollutants (Continued)							
cobalt	331	8	<0.05	<0.05	<0.05		<0.05
	332	8	<0.05		<0.05	<0.05	<0.05
	323	2	<0.05	<0.05	<0.05	<0.05	<0.05
fluoride	331	8	0.1		0.2		0.2
	332	8	0.1		0.2	0.2	0.2
	323	2	0.1	0.2	<0.1	0.1	0.1
iron	331	8	0.30	1.45	5.0		3.2
	332	8	0.30		4.25	4.10	4.10
	323	2	0.30	7.45	9.40	8.95	8.60
magnesium	331	8	5.50	68.7	75.3		72.0
	332	8	5.50		51.7	65.5	58.6
	323	2	5.50	166.0	151.0	112.0	143.0
manganese	331	8	<0.05	116.0	16.6		66.3
	332	8	<0.05		49.3	44.6	46.9
	323	2	<0.05	59.1	65.1	54.3	59.5
molybdenum	331	8	<0.05	<0.05	<0.05		<0.05
	332	8	<0.05		<0.05	<0.05	<0.05
	323	2	<0.05	<0.05	<0.05	<0.05	<0.05

Table V-8 (Continued)

CATHODE BRUSH WATER AND ANODE CLEANING WATER
RAW WASTEWATER SAMPLING DATA

Pollutant (a)	Stream Code	Sample Type*	Concentrations (mg/l, except as noted) Source	Day 1	Day 2	Day 3	Average
Nonconventional Pollutants (Continued)							
phenolics	331	1	<0.005		0.015		0.015
	332	1	<0.005		<0.005	<0.005	<0.005
	323	1	<0.005	<0.005	0.005	<0.005	0.001
phosphate	331	8	0.26	No Data	<0.01		<0.01
	332	8	0.26		0.12	<0.01	0.06
	323	2	0.26	<0.01	0.15	<0.01	0.005
sodium	331	8	4.10	6.1	6.7		6.4
	332	8	4.10		6.6	7.5	7
	323	2	4.10	9.6	9.4	7.6	8.8
sulfate	331	8	36		3,110		3,110
	332	8	36		2,540	2,180	2,360
	323	2	36	3,500	3,580	2,850	3,310
tin	331	8	0.50	<0.05	<0.5		0.28
	332	8	0.50		<0.5	<0.5	<0.5
	323	2	0.50	<0.5	<0.5	<0.5	<0.5
titanium	331	8	<0.05	<0.05	<0.05		<0.05
	332	8	<0.05		<0.05	<0.05	<0.05
	323	2	<0.05	0.1	0.1	0.1	0.1

Table V-8 (Continued)

CATHODE BRUSH WATER AND ANODE CLEANING WATER
RAW WASTEWATER SAMPLING DATA

Pollutant (a)	Stream Code	Sample Type*	Concentrations (mg/l, except as noted) Source	Day 1	Day 2	Day 3	Average
Nonconventional Pollutants (Continued)							
total dissolved solids (TDS)	331	8	189		5,260		5,260
	332	8	189		4,080	2,300	3,190
	323	2	189	6,560	6,000	4,630	5,730
total organic carbon (TOC)	331	8	3		7		7
	332	8	3		5	6	5.5
	323	2	3	10	6	6	7
total solids (TS)	331	8	200		4,970		4,970
	332	8	200		3,830	3,680	3,760
	323	2	200	6,790	5,820	4,610	5,740
vanadium	331	8	<0.05	<0.05	<0.05		<0.05
	332	8	<0.05		<0.05	<0.05	<0.05
	323	2	<0.05	<0.05	<0.05	<0.05	<0.05
yttrium	331	8	<0.05	<0.05	<0.05		<0.05
	332	8	<0.05		<0.05	<0.05	<0.05
	323	2	<0.05	<0.05	<0.05	<0.05	<0.05

Table V-8 (Continued)

CATHODE BRUSH WATER AND ANODE CLEANING WATER
RAW WASTEWATER SAMPLING DATA

Pollutant (a)	Stream Code	Sample Type*	Source	Concentrations (mg/l, except as noted) Day 1	Day 2	Day 3	Average
Conventional Pollutants							
oil and grease	331	1	3	29	3,530		1,779
	332	1	3		33	10	21
	323	1	3	19	12	4	12
total suspended solids (TSS)	331	8	1	No Data	166		166
	332	8	1		220	122	171
	323	2	1	18	17	9	15
pH (standard units)	331	8	6	1 - 2	Unable to Determine		
	332	8	6		Unable to Determine		1 - 2
	323	2	6	2.5	2.5	2.5	

* - $\leq$ 0.010 mg/l

** - $\leq$ 0.005 mg/l

(a) All toxic pollutant fractions were analyzed

(b) Interference

(c) Detection limit raised due to interference.

Table V-9

PRIMARY ZINC SAMPLING DATA COMBINED RAW WASTEWATER

Pollutant	Stream Code	Sample Type†	Source(a)	Concentrations (mg/l, except as noted) Day 1	Day 2	Day 3	Average
Toxic Pollutants							
44. methylene chloride	4	2		0.4	0.002		0.2
114. antimony	4	2		<0.10	<0.10		<0.10
115. arsenic	4	2		0.4	0.4		0.4
116. asbestos (MFL)	4	1			68		
117. beryllium	4	2		<0.005	<0.005		<0.005
118. cadmium	4	2		6.8	8.3		7.6
119. chromium	4	2		0.08	0.13		0.11
120. copper	4	2		1.7	1.9		1.8
121. cyanide	4	2		<0.02	<0.02		<0.02
122. lead	4	2		24.4	24.0		24.2
123. mercury	4	2		0.01	0.008		0.009
124. nickel	4	2		0.23	0.08		0.16
125. selenium	4	2		0.02	<0.005		<0.02
126. silver	4	2		0.13	0.15		0.14
127. thallium	4	2		<0.1	<0.1		<0.1
128. zinc	4	2		580	510		545

Table V-9 (Continued)

PRIMARY ZINC SAMPLING DATA COMBINED RAW WASTEWATER

Pollutant	Stream Code	Sample Type†	Source(a)	Concentrations (mg/l, except as noted) Day 1	Day 2	Day 3	Average
Nonconventionals							
chemical oxygen demand (COD)	4	2		220	200		210
total organic carbon (TOC)	4	2		2	2		2
phenols (total; by 4-AAP method)	4	2		<0.002	<0.002		<0.002
Conventionals							
total suspended solids (TSS)	4	2		88	130		109
pH (standard units)	4	1		2.15	2.15		

(a) Source water was not analyzed.

Table V-10

PRIMARY ZINC SAMPLING DATA MISCELLANEOUS RAW WASTEWATER

Pollutant	Stream Code	Sample Type	Source(b)	Concentrations (mg/l, except as noted) Day 1	Day 2	Day 3	Average
Toxic Pollutants(a)							
4. benzene	7	2		0.012	<0.015	<0.018	0.004
6. carbon tetrachloride	7	2		ND	ND	0.02	0.02
10. 1,2-dichloroethane	7	2		0.044	0.06	ND	0.052
23. chloroform	7	2		0.396	0.082	0.054	0.177
29. 1,1-dichloroethylene	7	2		0.028	ND	0.113	0.071
38. ethylbenzene	7	2		*	0.015	*	0.005
44. methylene chloride	7	2		0.191	ND	ND	0.191
51. chlorodibromomethane	7	2		ND	ND	0.014	0.014
66. bis(2-ethylhexyl) phthalate	7	3		*	0.017	0.021	0.013
68. di-n-butyl phthalate	7	3		0.013	*	0.013	0.009
85. tetrachloroethylene	7	2		0.023	*	*	0.008
87. trichloroethylene	7	2		0.066	<0.082	<0.084	0.022
114. antimony	7	3		0.1	<0.002	0.05	0.05
115. arsenic	7	3		1.5	9.5	3.5	4.8
116. asbestos (MFL)	7	1			1200.0		1200.0
117. beryllium	7	3		0.012	0.008	0.006	0.009
118. cadmium	7	3		5.0	5.0	5.0	5.0
119. chromium	7	3		0.907	0.697	0.539	0.714

Table V-10 (Continued)

PRIMARY ZINC SAMPLING DATA MISCELLANEOUS RAW WASTEWATER

Pollutant	Stream Code	Sample Type	Source(b)	Concentrations (mg/l, except as noted) Day 1	Day 2	Day 3	Average
Toxic Pollutants(a)							
120. copper	7	3		0.692	0.009	0.503	0.401
121. cyanide	7	3		0.003	0.003	0.004	0.003
122. lead	7	3		3.0	3.0	3.0	3.0
124. nickel	7	3		6.0	4.0	3.0	4.3
125. selenium	7	3		<0.002	0.2	0.1	0.10
128. zinc	7	3		100.0	100.0	100.0	100.0
Nonconventionals							
chemical oxygen demand (COD)	7	3		76.0	56.0	46.0	59.3
phenols (total; by 4-AAP method)	7	2		0.002	0.01	0.001	0.004
total organic carbon (TOC)	7	3		10.0	9.0	9.0	9.3
Conventionals							
oil and grease	7	1		13.0	13.0	16.0	14.0
total suspended solids (TSS)	7	3		23.0	12.0	9.0	14.7
pH (standard units)	7	1		2.0	2.3	2.1	

Table V-10 (Continued)

PRIMARY ZINC SAMPLING DATA MISCELLANEOUS RAW WASTEWATER

(a) Three samples were analyzed for the acid extractable pollutants, and three samples for the pesticide fraction; none of these pollutants was reported present above its analytical quantification limit.

(b) Source water was not analyzed.

Note: The following applies to this and subsequent tables.

*Less than or equal to 0.01 mg/l.

Table V-11

MISCELLANEOUS WASTEWATER SAMPLING DATA

Pollutant (a)	Stream Code	Sample Type*	Concentrations (mg/l, except as noted) Source	Day 1	Day 2	Day 3	Average
Toxic Pollutants							
1. acenaphthene	333	1		*			*
	328	1		ND			
6. carbon tetrachloride	333	1		ND			
	328	1		3.010			3.010
11. 1,1,1-trichloroethane	333	1	*	*			*
	334	1	*	*			*
	328	1	*	*			*
21. p-chloro-m-cresol	333	1	0.040	ND			
	334	1	0.040	0.014			0.014
	328	1	0.040	0.015			0.015
23. chloroform	333	1	0.013	*			*
	334	1	0.013	*			*
	328	1	0.013	0.016			0.016
38. ethylbenzene	333	1	0.049	ND			
	334	1	0.049	0.057			0.057
	328	1	0.049	ND			
39. fluoranthene	334	1		0.002			0.002

Table V-11 (Continued)

MISCELLANEOUS WASTEWATER SAMPLING DATA

Pollutant (a)	Stream Code	Sample Type*	Source	Concentrations (mg/l, except as noted) Day 1	Day 2	Day 3	Average
Toxic Pollutants (Continued)							
44. methylene chloride	333	1		*			*
	334	1		0.014			0.014
	328	1		0.013			0.013
47. bromoform (tribromomethane)	333	1	*	ND			
	334	1	*	ND			
	328	1	*	*			*
48. dichlorobromomethane	333	1		ND			
	334	1		ND			
	328	1		*			*
1. chlorodibromomethane	333	1		ND			
	334	1		ND			
	328	1		*			*
6 . bis(2-ethylhexyl)phthalate	333	1	0.040	*			*
	334	1	0.040	ND			
	328	1	0.040	*			*
68. di-n-butyl phthalate	333	1	*	*			*
	334	1	*	0.014			0.014
	328	1	*	0.012			0.012
70. diethyl phthalate	333	1	ND	*			*
	334	1	ND	*			*
	328	1	ND	*			*

Table V-11 (Continued)

MISCELLANEOUS WASTEWATER SAMPLING DATA

Pollutant (a)	Stream Code	Sample Type*	Source	Concentrations (mg/l, except as noted) Day 1	Day 2	Day 3	Average
Toxic Pollutants (Continued)							
76. chrysene	333	1		*			*
	328	1		ND			
84. pyrene	333	1		*			*
	328	1		ND			
85. tetrachloroethylene	333	1	ND	ND			
	334	1	ND	*			*
	328	1	ND	ND			
87. trichloroethylene	333	1	*	ND			
	334	1	*	*			*
	328	1	*	*			*
94. 4,4'-DDD	333	1		ND			
	328	1		**			**
95. alpha-endosulfan	333	1		ND			
	328	1		**			**
100. heptachlor	333	1	ND	ND			
	334	1	ND	**			**
	328	1	ND	**			**
101. heptachlor epoxide	333	1	*	ND			
	334	1	*	ND			
	328	1	*	**			**

Table V-11 (Continued)

MISCELLANEOUS WASTEWATER SAMPLING DATA

Pollutant (a)	Stream Code	Sample Type*	Concentrations (mg/l, except as noted) Source	Day 1	Day 2	Day 3	Average
Toxic Pollutants (Continued)							
102. alpha-BHC	333	1	ND	**			**
	334	1	ND	**			**
	328	1	ND	**			**
103. beta-BHC	333	1	*	ND			
	334	1	*	ND			
	328	1	*	ND			
104. gamma-BHC	333	1		**			**
	328	1		**			**
105. delta-BHC	333	1		ND			
	328	1		ND			
114. antimony	333	1	<0.01	<0.01			<0.01
	334	1	<0.01	<0.01			<0.01
	328	1	<0.01	<0.01			<0.01
115. arsenic	333	1	<0.01	<0.01			<0.01
	334	1	<0.01	<0.01			<0.01
	328	1	<0.01	<0.01			<0.01
117. beryllium	333	1	<0.005	<0.005			<0.005
	334	1	<0.005	<0.005			<0.005
	328	1	<0.005	<0.005			<0.005

Table V-11 (Continued)

MISCELLANEOUS WASTEWATER SAMPLING DATA

Pollutant (a)	Stream Code	Sample Type*	Concentrations (mg/l, except as noted) Source	Day 1	Day 2	Day 3	Average
Toxic Pollutants (Continued)							
118. cadmium	333	1	<0.02	<0.02			<0.02
	334	1	<0.02	0.18			0.18
	328	1	<0.02	0.3			0.3
119. chromium (total)	333	1	<0.02	<0.02			<0.02
	334	1	<0.02	0.04			0.04
	328	1	<0.02	0.06			0.06
120. copper	333	1	<0.05	<0.05			<0.05
	334	1	<0.05	0.45			0.45
	328	1	<0.05	0.3			0.3
121. cyanide (total)	333	1	<0.02	<0.02			<0.02
	334	1	<0.02	<0.02			<0.02
	328	1	<0.02	<0.02			<0.02
122. lead	333	1	<0.05	<0.05			<0.05
	334	1	<0.05	0.95			0.95
	328	1	<0.05	0.25			0.25
123. mercury	333	1	<0.001	<0.001			<0.001
	334	1	<0.001	0.028			0.028
	328	1	<0.001	0.27			0.27
124. nickel	333	1	<0.05	<0.05			<0.05
	334	1	<0.05	<0.05			<0.05
	328	1	<0.05	<0.05			<0.05

Table V-11 (Continued)

MISCELLANEOUS WASTEWATER SAMPLING DATA

Pollutant (a)	Stream Code	Sample Type*	Concentrations (mg/l, except as noted) Source	Day 1	Day 2	Day 3	Average
Toxic Pollutants (Continued)							
125. selenium	333	1	<0.05(b)	<0.01			<0.01
	334	1	<0.05(b)	<0.01			<0.01
	328	1	<0.05(b)	<0.01			<0.01
126. silver	333	1	<0.01	<0.01			<0.01
	334	1	<0.01	<0.01			<0.01
	328	1	<0.01	<0.01			<0.01
127. thallium	333	1	<0.01	<0.01			<0.01
	334	1	<0.01	<0.01			<0.01
	328	1	<0.01	<0.01			<0.01
128. zinc	333	1	0.06	1.46			1.46
	334	1	0.06	48.5			48.5
	328	1	0.06	45.9			45.9
Nonconventional Pollutants							
acidity	333	1	<1	<1			<1
	334	1	<1	184			184
	328	1	<1	139			139
alkalinity	333	1	73	3			3
	334	1	73	<1			<1
	328	1	73	<1			<1

Table V-11 (Continued)

MISCELLANEOUS WASTEWATER SAMPLING DATA

Pollutant (a)	Stream Code	Sample Type*	Concentrations (mg/l, except as noted) Source	Day 1	Day 2	Day 3	Average
Nonconventional Pollutants (Continued)							
aluminum	333	1	<0.10	<0.10			<0.10
	334	1	<0.10	0.90			0.90
	328	1	<0.10	0.30			0.30
ammonia nitrogen	333	1	<1	<1			<1
	334	1	<1	9			9
	328	1	<1	2			2
barium	333	1	<0.05	<0.05			<0.05
	334	1	<0.05	0.10			0.10
	328	1	<0.05	0.15			0.15
boron	333	1	<0.10	<0.10			<0.10
	334	1	<0.10	<0.10			<0.10
	328	1	<0.10	<0.10			<0.10
calcium	333	1	37.2	0.4			0.4
	334	1	37.2	17.7			17.7
	328	1	37.2	38.7			38.7
chemical oxygen demand (COD)	333	1	<1	<1			<1
	334	1	<1	23			23
	328	1	<1	66			66

Table V-11 (Continued)

MISCELLANEOUS WASTEWATER SAMPLING DATA

Pollutant (a)	Stream Code	Sample Type*	Concentrations (mg/l, except as noted) Source	Day 1	Day 2	Day 3	Average
Nonconventional Pollutants (Continued)							
chloride	333	1	5	<1			<1
	334	1	5	2			2
	328	1	5	27			27
cobalt	333	1	<0.05	<0.05			<0.05
	334	1	<0.05	<0.05			<0.05
	328	1	<0.05	<0.05			<0.05
fluoride	333	1	0.1	<0.1			<0.1
	334	1	0.1	<0.1			<0.1
	328	1	0.1	<0.1			<0.1
iron	333	1	0.30	0.450			0.450
	334	1	0.30	3.95			3.95
	328	1	0.30	1.10			1.10
magnesium	333	1	5.50	0.20			0.20
	334	1	5.50	9.70			9.70
	328	1	5.50	8.50			8.50
manganese	333	1	<0.05	<0.05			<0.05
	334	1	<0.05	2.0			2.0
	328	1	<0.05	0.70			0.70

Table V-11 (Continued)

MISCELLANEOUS WASTEWATER SAMPLING DATA

Pollutant (a)	Stream Code	Sample Type*	Concentrations (mg/l, except as noted) Source	Day 1	Day 2	Day 3	Average
Nonconventional Pollutants (Continued)							
molybdenum	333	1	<0.05	<0.05			<0.05
	334	1	<0.05	<0.05			<0.05
	328	1	<0.05	<0.05			<0.05
phenolics	333	1	<0.005	<0.005			<0.005
	334	1	<0.005	0.01			0.01
	328	1	<0.005	0.01			0.01
phosphate	333	1	0.26	<0.01			<0.01
	334	1	0.26	<0.01			<0.01
	328	1	0.26	3.05			3.05
sodium	333	1	4.10	0.20			0.20
	334	1	4.10	1.20			1.20
	328	1	4.10	7.2			7.2
sulfate	333	1	36	3			3
	334	1	36	229			229
	328	1	36	188			188
tin	333	1	0.50	<0.05			<0.05
	334	1	0.50	<0.05			<0.05
	328	1	0.50	0.15			0.15

Table V-11 (Continued)

MISCELLANEOUS WASTEWATER SAMPLING DATA

Pollutant (a)	Stream Code	Sample Type*	Concentrations (mg/l, except as noted) Source	Day 1	Day 2	Day 3	Average
Nonconventional Pollutants (Continued)							
titanium	333	1	<0.05	<0.05			<0.05
	334	1	<0.05	<0.05			<0.05
	328	1	<0.05	<0.05			<0.05
total dissolved solids (TDS)	333	1	189	33			33
	334	1	189	328			328
	328	1	189	394			394
total organic carbon (TOC)	333	1	3	4			4
	334	1	3	5			5
	328	1	3	11			11
total solids (TS)	333	1	200	33			33
	334	1	200	431			431
	328	1	200	436			436
vanadium	333	1	<0.05	<0.05			<0.05
	334	1	<0.05	<0.05			<0.05
	328	1	<0.05	<0.05			<0.05
yttrium	333	1	<0.05	<0.05			<0.05
	334	1	<0.05	<0.05			<0.05
	328	1	<0.05	<0.05			<0.05

Table V-11 Continued)

MISCELLANEOUS WASTEWATER SAMPLING DATA

Pollutant (a)	Stream Code	Sample Type*	Source	Concentrations (mg/l, except as noted) Day 1	Day 2	Day 3	Average
Conventional Pollutants							
oil and grease	333	1	3	5			5
	334	1	3	<1			<1
	328	1	3	<1			<1
total suspended solids (TSS)	333	1	1	<1			<1
	334	1	1	8			8
	328	1	1	4			4
pH (standard units)	333	1	6	7.5			
	334	1	6	3 - 4			
	328	1	6	4			

* - $\leq$ 0.010 mg/l

** - $\leq$ 0.005 mg/l

(a) All toxic pollutant fractions were analyzed

(b) Detection limit raised due to interference

Table V-12

MISCELLANEOUS WASTEWATER SAMPLING DATA

Pollutant (a)	Stream Code	Sample Type*	Concentrations (mg/l, except as noted) Source	Day 1	Day 2	Day 3	Average
Toxic Pollutants							
1. acenaphthene	324	1			ND		
	329	1		ND			
	330	1		*			*
11. 1,1,1-trichloroethane	324	1	*		*		*
	329	1	*	*			*
	330	1	*	*			*
18. bis(2-chloroethyl)ether	324	1			ND		
	329	1		ND			
	330	1		*			*
22. p-chloro-m-cresol	324	1	0.040		ND		
	329	1	0.040	ND			
	330	1	0.040	ND			
23. chloroform	324	1	0.013		*		*
	329	1	0.013	*			*
	330	1	0.013	*			*
38. ethylbenzene	324	1	0.049		ND		
	329	1	0.049	ND			
	330	1	0.049	ND			
44. methylene chloride	324	1			*		*
	329	1		*			*
	330	1		*			*

Table V-12 (Continued)

MISCELLANEOUS WASTEWATER SAMPLING DATA

Pollutant (a)	Stream Code	Sample Type*	Source	Concentrations (mg/l, except as noted) Day 1	Day 2	Day 3	Average
Toxic Pollutants (Continued)							
47. bromoform (tribromomethane)	324	1	*		*		*
	329	1	*	ND			
	330	1	*	*			*
51. chlorodibromomethane	324	1			*		*
	329	1		ND			
	330	1		ND			
66. bis(2-ethylhexyl)phthalate	324	1	0.040		ND		
	329	1	0.040	*			*
	330	1	0.040	*			*
68. di-n-butyl phthalate	324	1	*		*		*
	329	1	*	0.014			0.014
	330	1	*	*			*
70. diethyl phthalate	324	1	ND		ND		
	329	1	ND	ND			
	330	1	ND	*			*
73. benzo(a)pyrene	324	1			*		*
	329	1		ND			
	330	1		ND			
76. chrysene	324	1			*		*
	329	1		*			*
	330	1		*			*

Table V-12 (Continued)

MISCELLANEOUS WASTEWATER SAMPLING DATA

Pollutant (a)	Stream Code	Sample Type*	Concentrations (mg/l, except as noted) Source	Day 1	Day 2	Day 3	Average
Toxic Pollutants (Continued)							
84. pyrene	324	1			*		*
	329	1		*			*
	330	1		*			*
85. tetrachloroethylene	324	1	ND		ND		
	329	1	ND	ND			
	330	1	ND	ND			
87. trichloroethylene	324	1	*		*		*
	329	1	*	ND			
	330	1	*	*			*
101. heptachlor epoxide	324	1	*		ND		
	329	1	*	ND			
	330	1	*	ND			
102. alpha-BHC	324	1	ND		ND		
	329	1	ND	*			*
	330	1	ND	ND			
103. beta-BHC	324	1	*		ND		
	329	1	*	*			*
	330	1	*	ND			
104. gamma-BHC	324	1			ND		
	329	1		*			*
	330	1		ND			

Table V-12 (Continued)

MISCELLANEOUS WASTEWATER SAMPLING DATA

Pollutant (a)	Stream Code	Sample Type*	Concentrations (mg/l, except as noted) Source	Day 1	Day 2	Day 3	Average
Toxic Pollutants (Continued)							
105. delta-BHC	324	1			ND		
	329	1		*			*
	330	1		ND			
114. antimony	324	1	<0.01		<0.01		<0.01
	329	1	<0.01	<0.01			<0.01
	330	1	<0.01	<0.01			<0.01
115. arsenic	324	1	<0.01		<0.01		<0.01
	329	1	<0.01	<0.01			<0.01
	330	1	<0.01	<0.01			<0.01
117. beryllium	324	1	<0.005		<0.005		<0.005
	329	1	<0.005	<0.005			<0.005
	330	1	<0.005	<0.005			<0.005
118. cadmium	324	1	<0.02		<0.02		<0.02
	329	1	<0.02	<0.02			<0.02
	330	1	<0.02	<0.02			<0.02
119. chromium (total)	324	1	<0.02		<0.02		<0.02
	329	1	<0.02	<0.02			<0.02
	330	1	<0.02	<0.02			<0.02
120. copper	324	1	<0.05		<0.05		<0.05
	329	1	<0.05	<0.05			<0.05
	330	1	<0.05	<0.05			<0.05

Table V-12 (Continued)

MISCELLANEOUS WASTEWATER SAMPLING DATA

Pollutant (a)	Stream Code	Sample Type*	Concentrations (mg/l, except as noted) Source	Day 1	Day 2	Day 3	Average
Toxic Pollutants (Continued)							
121. cyanide (total)	324	1	<0.02		<0.02		<0.02
	329	1	<0.02	<0.02			<0.02
	330	1	<0.02	<0.02			<0.02
122. lead	324	1	<0.05		<0.05		<0.05
	329	1	<0.05	0.15			0.15
	330	1	<0.05	0.05			0.05
123. mercury	324	1	<0.001		<0.001		<0.001
	329	1	<0.001	<0.001			<0.001
	330	1	<0.001	<0.001			<0.001
124. nickel	324	1	<0.05		<0.05		<0.05
	329	1	<0.05	<0.05			<0.05
	330	1	<0.05	<0.05			<0.05
125. selenium	324	1	<0.05(b)		<0.01		<0.01
	329	1	<0.05(b)	<0.01			<0.01
	330	1	<0.05(b)	<0.01			<0.01
126. silver	324	1	<0.01		<0.01		<0.01
	329	1	<0.01	<0.01			<0.01
	330	1	<0.01	<0.01			<0.01
127. thallium	324	1	<0.01		<0.01		<0.01
	329	1	<0.01	<0.01			<0.01
	330	1	<0.01	<0.01			<0.01

Table V-12 (Continued)

MISCELLANEOUS WASTEWATER SAMPLING DATA

Pollutant (a)	Stream Code	Sample Type*	Concentrations (mg/l, except as noted) Source	Day 1	Day 2	Day 3	Average
Toxic Pollutants (Continued)							
128. zinc	324	1	0.06		0.08		0.08
	329	1	0.06	1.84			1.84
	330	1	0.06	0.380			0.380
Nonconventional Pollutants							
acidity	324	1	<1		<1		<1
	329	1	<1	<1			<1
	330	1	<1	<1			<1
alkalinity	324	1	73		74		74
	329	1	73	73			73
	330	1	73	74			74
aluminum	324	1	<0.10		<0.10		<0.10
	329	1	<0.10	<0.10			<0.10
	330	1	<0.10	<0.10			<0.10
ammonia nitrogen	324	1	<1		<1		<1
	329	1	<1	<1			<1
	330	1	<1	<1			<1
barium	324	1	<0.05		<0.05		<0.05
	329	1	<0.05	<0.05			<0.05
	330	1	<0.05	<0.05			<0.05
boron	324	1	<0.10		<0.10		<0.10
	329	1	<0.10	<0.10			<0.10
	330	1	<0.10	<0.10			<0.10

Table V-12 (Continued)

MISCELLANEOUS WASTEWATER SAMPLING DATA

Pollutant (a)	Stream Code	Sample Type*	Concentrations (mg/l, except as noted) Source	Day 1	Day 2	Day 3	Average
Nonconventional Pollutants (Continued)							
calcium	324	1	37.2		37.3		37.3
	329	1	37.2	36.2			36.2
	330	1	37.2	37.8			37.8
chemical oxygen demand (COD)	324	1	<1		2		2
	329	1	<1	7			7
	330	1	<1	6			6
chloride	324	1	5		4		4
	329	1	5	4			4
	330	1	5	4			4
cobalt	324	1	<0.05		<0.05		<0.05
	329	1	<0.05	<0.05			<0.05
	330	1	<0.05	<0.05			<0.05
fluoride	324	1	0.1		0.1		0.1
	329	1	0.1	0.1			0.1
	330	1	0.1	0.1			0.1
iron	324	1	0.30		<0.05		<0.05
	329	1	0.30	0.35			0.35
	330	1	0.30	<0.05			<0.05
magnesium	324	1	5.50		5.50		5.50
	329	1	5.50	5.80			5.80
	330	1	5.50	5.60			5.60

Table V-12 (Continued)

MISCELLANEOUS WASTEWATER SAMPLING DATA

Pollutant (a)	Stream Code	Sample Type*	Concentrations (mg/l, except as noted) Source	Day 1	Day 2	Day 3	Average
Nonconventional Pollutants (Continued)							
manganese	324	1	<0.05		<0.05		<0.05
	329	1	<0.05	0.05			0.05
	330	1	<0.05	<0.05			<0.05
molybdenum	324	1	<0.05		<0.05		<0.05
	329	1	<0.05	<0.05			<0.05
	330	1	<0.05	<0.05			<0.05
phenolics	324	1	<0.005		0.022		0.022
	329	1	<0.005	<0.005			<0.005
	330	1	<0.005	0.010			0.010
phosphate	324	1	0.26		0.18		0.18
	329	1	0.26	0.24			0.24
	330	1	0.26	0.12			0.12
sodium	324	1	4.10		3.70		3.70
	329	1	4.10	3.9			3.9
	330	1	4.10	3.90			3.90
sulfate	324	1	36		37		37
	329	1	36	43			43
	330	1	36	40			40
tin	324	1	0.50		<0.05		<0.05
	329	1	0.50	<0.05			<0.05
	330	1	0.50	<0.05			<0.05

Table V-12 (Continued)

MISCELLANEOUS WASTEWATER SAMPLING DATA

Pollutant (a)	Stream Code	Sample Type*	Concentrations (mg/l, except as noted) Source	Day 1	Day 2	Day 3	Average
Nonconventional Pollutants (Continued)							
titanium	324	1	<0.05		<0.05		<0.05
	329	1	<0.05	<0.05			<0.05
	330	1	<0.05	<0.05			<0.05
total dissolved solids (TDS)	324	1	189		194		194
	329	1	189	182			182
	330	1	189	191			191
total organic carbon (TOC)	324	1	3		5		5
	329	1	3	16			16
	330	1	3	5			5
total solids (TS)	324	1	200		169		169
	329	1	200	199			199
	330	1	200	187			187
vanadium	324	1	<0.05		<0.05		<0.05
	329	1	<0.05	<0.05			<0.05
	330	1	<0.05	<0.05			<0.05
yttrium	324	1	<0.05		<0.05		<0.05
	329	1	<0.05	<0.05			<0.05
	330	1	<0.05	<0.05			<0.05

Table V-12 (Continued)

MISCELLANEOUS WASTEWATER SAMPLING DATA

Pollutant (a)	Stream Code	Sample Type*	Source	Concentrations (mg/l, except as noted) Day 1	Day 2	Day 3	Average
Conventional Pollutants							
oil and grease	324	1	3		<1		<1
	329	1	3	<2			<2
	330	1	3	7			7
total suspended solids (TSS)	324	1	1		<1		<1
	329	1	1	<1			<1
	330	1	1	<1			<1
pH (standard units)	324	1	6		7.5		
	329	1	6	8.3			
	330	1	6	8.0			

* - $\leq$ 0.010 mg/l

** - $\leq$ 0.005 mg/l

(a) All toxic pollutant fractions were analyzed.

(b) Detection limit raised due to interference.

Table V-13

PRIMARY ZINC SAMPLING DATA TREATMENT PLANT SAMPLES PLANT A

Pollutant	Stream Code	Sample Type	Source	Concentrations (mg/l, except as noted) Day 1	Day 2	Day 3	Average
Toxic Pollutants							
23. chloroform	37	2	*	ND	*	0.029	0.015
66. bis(2-ethylhexyl) phthalate	37	3	*	*	0.176	*	0.0587
106. PCB-1242 (a) 107. PCB-1254 (a) 108. PCB-1221 (a)	37	3	**	**	**	0.018	0.006
109. PCB-1232 (b) 110. PCB-1248 (b) 111. PCB-1260 (b) 112. PCB-1016 (b)	37	3	**	**	**	0.0084	0.0028
118. cadmium	37	3	0.02	<0.002	0.003	0.2	0.07
120. copper	37	3	0.007	0.03	<0.006	0.02	0.017
122. lead	37	3	0.05	0.1	<0.02	<0.02	0.03
123. mercury	37	3	<0.0001	0.0032	0.003	0.0028	0.003
128. zinc	37	3	0.9	0.8	0.9	10.0	3.9
Nonconventionals							
ammonia	37	2		0.8	19.0	12.0	10.60
chemical oxygen demand (COD)	37	2		23.0	22.0	28.0	24.3
phenols (total; by 4-AAP method)	37	2		1.0	5.0	3.0	3.0
total organic carbon (TOC)	37	2		0.004	<0.001	<0.001	0.0013

Table V-13 (Continued)

PRIMARY ZINC SAMPLING DATA TREATMENT PLANT SAMPLES PLANT A

Pollutant	Stream Code	Sample Type	Source	Concentrations (mg/l, except as noted) Day 1	Day 2	Day 3	Average
Conventionals							
oil and grease	37	2	4.0	4.0	6.0	2.0	4.0
total suspended solids (TSS)	37	2		37.0	33.0	82.0	50.7
pH (standard units)	37	2		11.3	10.6	11.0	

(a),(b) Reported together.

**Less than 0.005 mg/l.

Table V-14

PRIMARY ZINC SAMPLING DATA TREATMENT PLANT SAMPLES PLANT B

Pollutant	Stream Code	Sample Type	Source	Concentrations (mg/l, except as noted) Day 1	Day 2	Day 3	Average
Toxic Pollutants							
23. chloroform	210	5	*	0.055			0.055
	211	5		ND			
44. methylene chloride	210	5	*	2.61			2.61
	211	5		*			*
49. trichlorofluoromethane	210	5	*	0.101			0.101
	211	5		ND			
66. bis(2-ethylhexyl) phthalate	210	5	*	0.107			0.107
	211	5		*			*
114. antimony	210	5	<0.8	<0.8			<0.8
	211	5		<1.52			<1.52
115. arsenic	210	5	<0.01	<0.01			<0.01
	211	5		0.836			0.836
117. beryllium	210	5	<0.01	<0.01			<0.01
	211	5		<0.02			<0.02
118. cadmium	210	5	<0.005	0.022			0.022
	211	5		8.08			8.08
119. chromium	210	5	<0.01	0.14			0.14
	211	5		2.186			2.186

Table V-14 (Continued)

PRIMARY ZINC SAMPLING DATA TREATMENT PLANT SAMPLES PLANT B

Pollutant	Stream Code	Sample Type	Source	Concentrations (mg/l, except as noted) Day 1	Day 2	Day 3	Average
Toxic Pollutants							
120. copper	210	5	0.019	0.035			0.035
	211	5		6.23			6.23
122. lead	210	5	<0.05	<0.05			<0.05
	211	5		8.47			8.47
123. mercury	210	5	<0.002	<0.002			<0.002
	211	5		0.017			0.017
124. nickel	210	5	<0.005	<0.005			<0.005
	211	5		0.0082			0.082
125. selenium	210	5	<0.001	<0.04			<0.04
	211	5		0.169			0.169
126. silver	210	5	<0.0063	0.0156			0.015 6
	211	5		0.095			0.095
128. zinc	210	5	0.38	1.13			1.13
	211	5		2057.0			2057.0
Conventionals							
pH (standard units)	210	5		9.8			

Table V-15

PRIMARY ZINC SAMPLING DATA TREATMENT PLANT SAMPLES PLANT C

Pollutant	Stream Code	Sample Type	Source(a)	Concentrations (mg/l, except as noted) Day 1	Day 2	Day 3	Average
Toxic Pollutants							
10. 1,2-dichloroethane	8	2		0.012	0.072	ND	0.042
23. chloroform	8	2		0.385	0.087	0.054	0.18
29. 1,1-dichloroethylene	8	2		0.015	ND	ND	0.015
47. bromoform	8	2		0.053	ND	ND	0.053
6 . bis(2-ethylhexyl) phthalate	8	3		0.041	0.018	0.022	0.027
6 di-n-butyl phthalate	8	3		*	*	0.013	0.004
85. tetrachloroethylene	8	2		0.03	ND	*	0.02
87. trichloroethylene	8	2		0.061	<0.031	<0.036	0.02
114. antimony	8	3		0.1	<0.002	0.1	0.07
115. arsenic	8	3		<0.03	0.005	0.002	0.002
118. cadmium	8	3		0.129	0.143	0.071	0.11
119. chromium	8	3		0.291	0.306	0.463	0.353
120. copper	8	3		0.009	0.019	0.113	0.05
121. cyanide	8	3		0.007	0.003	0.05	0.02
122. lead	8	3		0.16	0.188	0.115	0.15
124. nickel	8	3		<0.05	<0.05	<0.05	<0.05
125. selenium	8	3		0.6	0.05	0.15	0.3
128. zinc	8	3		0.308	5.0	0.834	2.0

Table V-15 (Continued)

PRIMARY ZINC SAMPLING DATA TREATMENT PLANT SAMPLES PLANT C

Pollutant	Stream Code	Sample Type	Source(a)	Concentrations (mg/l, except as noted) Day 1	Day 2	Day 3	Average
Nonconventionals							
chemical oxygen demand (COD)	8	2		18.0	17.0	15.0	16.7
phenols (total; by 4-AAP method)	8	2		0.008	0.008	0.011	0.009
total organic carbon (TOC)	8	2		9.0	8.0	8.0	8.3
Conventionals							
oil and grease	8	2		11.0	1.0	18.0	10.0
total suspended solids (TSS)	8	2		9.0	1.0	9.0	9.3
pH (standard units)	8	1		8.2	8.4	8.6	

(a) Source water was not analyzed.

Table V-16

PRIMARY ZINC SAMPLING DATA TREATMENT PLANT SAMPLES PLANT D

Pollutant	Stream Code	Sample Type	Source(a)	Concentrations (mg/l, except as noted) Day 1	Day 2	Day 3	Average
Toxic Pollutants							
118. cadmium	214	2			0.02		0.02
119. chromium	214	2			0.48		0.48
120. copper	214	2			1.01		1.01
122. lead	214	2			0.2		0.2
123. mercury	214	2			0.0006		0.0006
125. selenium	214	2			0.25		0.25
128. zinc	214	2			0.65		0.65
Nonconventionals							
ammonia	214	2			0.4		0.4
chemical oxygen demand (COD)	214	2			4.0		4.
phenols (total; by 4-AAP method)	214	2		<0.017			<0.017
total organic carbon (TOC)	214	2			3.0		3.0
Conventionals							
oil and grease	214	2			3.0		3.0
total suspended solids (TSS)	214	2			1.0		1.0

(a) Source water was not analyzed.

Table V-17

PRIMARY ZINC SAMPLING DATA TREATMENT PLANT SAMPLES PLANT E

Pollutant	Stream Code	Sample Type	Source†	Concentrations (mg/l, except as noted) Day 1	Day 2	Day 3	Average
Toxic Pollutants							
4. benzene	5	2		<0.029	*	<0.014	<0.018
	6	2		*	0.02	*	0.007
9. hexachlorobenzene	5	3		ND	ND	0.1	0.1
	6	3		0.047	ND	ND	0.047
10. 1,2-dichloroethane	5	2		*	ND	0.073	0.037
	6	2		0.019	ND	0.046	0.033
23. chloroform	5	2		0.378	0.098	0.077	0.18
	6	2		0.329	0.0955	0.088	0.17
29. 1,1-dichloroethylene	5	2			ND	ND	
	6	2		0.011	ND	ND	0.011
39. fluoranthene	5	3		0.015	ND	ND	0.015
	6	3		ND	ND	ND	
44. methylene chloride	5	2		0.221	ND	ND	0.221
	6	2		0.133	ND	ND	0.133
54. isophorone	5	3		0.018	ND	ND	0.018
	6	3		ND	ND	ND	
66. bis(2-ethylhexyl) phthalate	5	3		ND	0.023	*	0.01
	6	3		*	0.012	0.013	0.008

Table V-17 (Continued)

PRIMARY ZINC SAMPLING DATA TREATMENT PLANT SAMPLES PLANT E

Pollutant	Stream Code	Sample Type	Source†	Concentrations (mg/l, except as noted) Day 1	Day 2	Day 3	Average
Toxic Pollutants							
67. butyl benzyl phthalate	5	3		0.03	ND	ND	0.03
	6	3		ND	ND	ND	
68. di-n-butyl phthalate	5	3		0.03	ND	ND	0.03
	6	3		*	ND	0.015	0.0075
70. diethyl phthalate	5	3		0.018	ND	*	0.009
	6	3		ND	ND	ND	
71. dimethyl phthalate	5	3		0.022	ND	ND	0.022
	6	3		ND	ND	ND	
76. chrysene	5	3		0.011	ND	*	0.0055
	6	3		ND	ND	ND	
77. acenaphthylene	5	3		0.018	ND	ND	0.018
	6	3		*	ND	ND	*
80. fluorene	5	3		0.014	ND	ND	0.014
	6	3		*	ND	ND	*
84. pyrene	5	3		0.014	ND	0.015	0.015
	6	3		*	ND	ND	*
87. trichloroethylene	5	2		<0.182	*	<0.074	<0.089
	6	2		<0.049	ND	ND	<0.049

Table V-17 (Continued)

PRIMARY ZINC SAMPLING DATA TREATMENT PLANT SAMPLES PLANT E

Pollutant		Stream Code	Sample Type	Source†	Concentrations (mg/l, except as noted) Day 1	Day 2	Day 3	Average
Toxic Pollutants								
106. PCB-1242	(a)	5	3		**	ND	ND	**
107. PCB-1254	(a)	6	3		<0.02	<0.02	<0.02	<0.02
108. PCB-1221	(a)							
109. PCB-1232	(b)	5	3		**	ND	ND	**
110. PCB-1248	(b)	6	3		<0.015	<0.015	<0.015	<0.015
111. PCB-1260	(b)							
112. PCB-1016	(b)							
113. toxaphene		5	3		**	ND	ND	**
		6	3		<0.007	<0.007	<0.007	<0.007
114. antimony		5	3		<0.002	<0.002	<0.002	<0.0023
		6	3		0.004	<0.002	<0.002	0.001
115. arsenic		5	3		0.003	<0.002	0.003	0.002
		6	3		<0.002	0.003	0.002	0.002
117. beryllium		5	3		<0.002	<0.002	<0.002	<0.002
		6	3		<0.002	<0.002	<0.003	<0.002
118. cadmium		5	3		0.41	0.24	0.391	0.35
		6	3		0.595	0.666	0.638	0.633
119. chromium		5	3		<0.024	<0.024	<0.024	<0.024
		6	3		<0.024	<0.024	<0.024	<0.024

Table V-17 (Continued)

PRIMARY ZINC SAMPLING DATA TREATMENT PLANT SAMPLES PLANT E

Pollutant	Stream Code	Sample Type	Source†	Concentrations (mg/l, except as noted) Day 1	Day 2	Day 3	Average
Toxic Pollutants							
120. copper	5	3		0.011	0.023	0.076	0.037
	6	3		0.032	0.013	0.009	0.02
121. cyanide	5	3		0.518	0.13	0.477	0.38
	6	3		0.007	0.008	0.009	0.008
122. lead	5	3		<0.06	0.1790	0.599	0.26
	6	3		<0.06	<0.06	<0.06	<0.06
123. mercury	5	3		0.0011	0.0035	0.004	0.0029
	6	3		0.0005	0.0004	0.0005	0.0005
124. nickel	5	3		<0.05	<0.05	<0.05	<0.05
	6	3		<0.05	<0.05	<0.05	<0.05
125. selenium	5	3		0.03	0.0018	0.25	0.094
	6	3		0.025	0.025	0.03	0.027
128. zinc	5	3		9.0	8.0	9.0	8.7
	6	3		7.0	8.0	8.0	7.7
Nonconventionals							
chemical oxygen demand (COD)	5	2		18.0	24.0	19.0	20.3
	6	2		14.0	23.0	14.0	17.0
phenols (total; by 4-AAP method)	5	2	0.010	0.018	0.021	0.036	0.025
	6	2		0.011	0.01	0.005	0.009
total organic carbon (TOC)	5	2		8.0	6.0	8.0	7.3
	6	2		9.0	7.0	9.0	8.3

Table V-17 (Continued)

PRIMARY ZINC SAMPLING DATA TREATMENT PLANT SAMPLES PLANT E

Pollutant	Stream Code	Sample Type	Source†	Concentrations (mg/l, except as noted) Day 1	Day 2	Day 3	Average
Conventionals							
oil and grease	5	2		6.0	1.0	24.0	10.3
	6	2		3.0	12.0	7.0	7.3
total suspended solids (TSS)	5	2		12.0	8.0	20.0	13.3
	6	2		<1.0	1.0	<1.0	0.33
pH (standard units)	5	1		7.35	7.95	7.4	
	6	1		7.4	7.6	7.65	

†Source water analyzed for asbestos and phenols only. Asbestos was not detected.

Table V-18

PRIMARY ZINC TREATMENT PLANT SAMPLES - PLANT G

Pollutant (a)	Stream Code	Sample Type*	Concentrations (mg/l, except as noted) Source	Day 1	Day 2	Day 3	Average
Toxic Pollutants							
1. acenaphthene	325	2	ND	*	ND	ND	*
	326	3	ND	ND	ND	ND	
	327	2				ND	
4. benzene	325	1	ND	0.018	ND	ND	0.018
	326	1	ND	0.018	ND	ND	0.018
6. carbon tetrachloride	325	1	ND	*	*	*	*
	326	1	ND	*	*	*	*
	327	1				*	*
11. 1,1,1-trichloroethane	325	1	*	*	*	*	*
	326	1	*	*	*	*	*
	327	1	*			*	*
18. bis(2-chloroethyl)ether	325	2	ND	ND	ND	ND	
	326	3	ND	ND	*	ND	*
	327	2				ND	
22. p-chloro-m-cresol	325	2	0.040	*	ND	ND	*
	326	3	0.040	ND	ND	0.042	0.042
	327	2	0.040			0.024	0.024
23. chloroform	325	1	0.013	*	*	*	*
	326	1	0.013	*	*	*	*
	327	1	0.013			*	*

Table V-18 (Continued)

PRIMARY ZINC TREATMENT PLANT SAMPLES - PLANT G

Pollutant (a)	Stream Code	Sample Type*	Source	Concentrations (mg/l, except as noted) Day 1	Day 2	Day 3	Average
Toxic Pollutants (Continued)							
44. 2,4-dimethylphenol	325	2		ND	ND	ND	
	326	3		ND	*	ND	*
45. 2,6-dinitrotoluene	325	2		ND	ND	ND	
	326	3		*	ND	ND	*
46. ethylbenzene	325	1	0.049	ND	ND	0.055	0.055
	326	1	0.049	ND	ND	0.043	0.043
	327	1	0.049			0.049	0.049
49. fluoranthene	325	2	ND	*	*	ND	*
	326	3	ND	ND	*	ND	*
44. methylene chloride	325	1	ND	0.018	*	0.012	0.01
	326	1	ND	0.021	*	0.013	0.011
	327	1				0.016	0.016
47. bromoform (tribromomethane)	325	1	*	ND	*	*	*
	326	1	*	*	*	*	*
	327	1	*			*	*
48. dichlorobromomethane	325	1	ND	ND	ND	ND	
	326	1	ND	*	ND	ND	*
	327	1				ND	
56. nitrobenzene	325	2	ND	ND	ND	ND	
	326	3		*	ND	ND	*

Table V-18 (Continued)

PRIMARY ZINC TREATMENT PLANT SAMPLES - PLANT G

Pollutant (a)	Stream Code	Sample Type*	Concentrations (mg/l, except as noted) Source	Day 1	Day 2	Day 3	Average
Toxic Pollutants (Continued)							
57. 2-nitrophenol	325	2	ND	ND	ND	ND	
	326	3	ND	ND	ND	*	*
62. N-nitrosodiphenylamine	325	2	ND	ND	*	ND	*
	326	3	ND	0.014	*	ND	0.007
65. phenol	325	2	ND	*	ND	ND	*
	326	3	ND	ND	*	ND	*
66. bis(2-ethylhexyl)phthalate	325	2	0.040	*	*	ND	*
	326	3	0.040	*	ND	*	*
	327	2	0.040			*	*
68. di-n-butyl phthalate	325	2	*	*	*	0.014	0.0046
	326	3	*	*	*	0.012	0.004
	327	2	*			0.016	0.016
69. di-n-octyl phthalate	325	2		ND	ND	ND	
	326	3		*	ND	ND	*
70. diethyl phthalate	325	2	ND	*	*	ND	*
	326	3	ND	ND	ND	*	*
	327	2	ND			*	*

Table V-18 (Continued)

PRIMARY ZINC TREATMENT PLANT SAMPLES - PLANT G

Pollutant (a)	Stream Code	Sample Type*	Source	Concentrations (mg/l, except as noted) Day 1	Day 2	Day 3	Average
Toxic Pollutants (Continued)							
76. chrysene	325	2	ND	*	ND	ND	*
	326	3	ND	ND	ND	ND	
	327	2				ND	
80. fluorene	325	2	ND	ND	ND	ND	
	326	3	ND	*	ND	ND	*
81. phenanthrene	325	2	ND	*	ND	ND	*
	326	3	ND	*	ND	ND	*
84. pyrene	325	2	ND	*	ND	ND	*
	326	3	ND	ND	ND	ND	
	327	2	ND			ND	
85. tetrachloroethylene	325	1	ND	ND	ND	ND	
	326	1	ND	0.034	ND	*	0.017
	327	1	ND			*	*
86. toluene	325	1	ND	ND	ND	ND	
	326	1	ND	0.019	ND	*	0.009
87. trichloroethylene	325	1	*	*	*	ND	*
	326	1	*	*	*	ND	*
	327	1	*			*	*

Table V-18 (Continued)

PRIMARY ZINC TREATMENT PLANT SAMPLES - PLANT G

Pollutant (a)	Stream Code	Sample Type*	Concentrations (mg/l, except as noted) Source	Day 1	Day 2	Day 3	Average
Toxic Pollutants (Continued)							
101. heptachlor epoxide	327	2	*			*	*
102. alpha-BHC	325	2	ND	ND	**	**	**
	326	3	ND	**	**	**	**
	327	2	ND			**	**
103. beta-BHC	325	2	*	ND	**	ND	**
	326	3	*	ND	**	ND	**
	327	2	*			**	**
104. gamma-BHC	325	2	ND	ND	**	ND	**
	326	3	ND	ND	ND	ND	
	327	2	ND			**	**
105. delta-BHC	325	2	ND	ND	**	**	**
	326	3	ND	ND	ND	**	**
	327	2	ND			ND	
114. antimony	325	2	<0.01	0.01	<0.01	<0.01	0.003
	326	3	<0.01	<0.01	<0.01	<0.01	<0.01
	327	2	<0.01			<0.01	<0.01
115. arsenic	325	2	<0.01	0.02	0.02	<0.02(b)	0.013
	326	3	<0.01	<0.01	<0.1	<0.01	<0.04
	327	2	<0.01			<0.01	<0.01

Table V-18 (Continued)

PRIMARY ZINC TREATMENT PLANT SAMPLES - PLANT G

Pollutant (a)	Stream Code	Sample Type*	Concentrations (mg/l, except as noted) Source	Day 1	Day 2	Day 3	Average
Toxic Pollutants (Continued)							
117. beryllium	325	2	<0.005	<0.005	<0.005	<0.005	<0.005
	326	3	<0.005	<0.005	<0.005	<0.005	<0.005
	327	2	<0.005			<0.005	<0.005
118. cadmium	325	2	<0.02	9.12	10.0	9.38	9.5
	326	3	<0.02	0.08	0.08	0.08	0.08
	327	2	<0.02			0.08	0.08
119. chromium (total)	325	2	<0.02	0.06	0.06	0.06	0.06
	326	3	<0.02	<0.02	0.02	<0.02	0.006
	327	2	<0.02			<0.02	<0.02
120. copper	325	2	<0.05	5.4	5.95	5.55	5.6
	326	3	<0.05	<0.05	<0.05	<0.05	<0.05
	327	2	<0.05			<0.05	<0.05
121. cyanide (total)	325	1	<0.02	0.03	0.02	<0.02	0.02
	326	1	<0.02	<0.02	<0.02	<0.02	<0.02
	327	1	<0.02			<0.02	<0.02
122. lead	325	2	<0.05	0.4	0.45	0.55	0.5
	326	3	<0.05	<0.05	<0.05	<0.05	<0.05
	327	2	<0.05			<0.05	<0.05
123. mercury	325	2	<0.001	0.064	0.068	0.082	0.071
	326	3	<0.001	<0.001	<0.001	<0.001	<0.001
	327	2	<0.001			<0.001	<0.001

Table V-18 (Continued)

PRIMARY ZINC TREATMENT PLANT SAMPLES - PLANT G

Pollutant (a)	Stream Code	Sample Type*	Concentrations (mg/l, except as noted) Source	Day 1	Day 2	Day 3	Average
Toxic Pollutants (Continued)							
124. nickel	325	2	<0.05	0.05	<0.05	<0.05	0.02
	326	3	<0.05	<0.05	<0.05	<0.05	<0.05
	327	2	<0.05			<0.05	<0.05
125. selenium	325	2	<0.05(b)	<0.05(b)	<0.05(b)	<0.05(b)	<0.05
	326	3	<0.05(b)	<0.01	<0.01	<0.01	<0.01
	327	2	<0.05(b)			<0.01	<0.01
126. silver	325	2	<0.01	<0.01	<0.01	<0.01	<0.01
	326	3	<0.01	<0.01	<0.01	<0.01	<0.01
	327	2	<0.01			<0.01	<0.01
127. thallium	325	2	<0.01	<0.01	<0.01	<0.01	<0.01
	326	3	<0.01	<0.01	<0.01	<0.01	<0.01
	327	2	<0.01			<0.01	<0.01
128. zinc	325	2	0.06	1,680	1,810	1,760	1,750
	326	3	0.06	0.460	0.880	0.960	0.766
	327	2	0.06			0.980	0.980
Nonconventional Pollutants							
acidity	325	2	<1	7,270	6,980	7,190	7,146
	326	3	<1	<1	2	<1	0.7
	327	2	<1			5	5

Table V-18 (Continued)

PRIMARY ZINC TREATMENT PLANT SAMPLES - PLANT G

Pollutant (a)	Stream Code	Sample Type*	Concentrations (mg/l, except as noted) Source	Day 1	Day 2	Day 3	Average
Nonconventional Pollutants (Continued)							
alkalinity	325	2	73	<1	<1	<1	<1
	326	3	73	<1	7	7	4.6
	327	2	73			9	9
aluminum	325	2	<0.10	10.1	10.7	10.9	10.5
	326	3	<0.10	<0.1	<0.1	<0.1	<0.1
	327	2	<0.10			<0.1	<0.1
ammonia nitrogen	325	2	<1	3	3	4	3.3
	326	3	<1	2	3	2	2.3
	327	2	<1			2	2
barium	325	2	<0.05	<0.05	<0.05	<0.05	<0.05
	326	3	<0.05	0.05	<0.05	0.05	0.03
	327	2	<0.05			0.05	0.05
boron	325	2	<0.10	0.3	0.30	0.30	0.3
	326	3	<0.10	0.10	0.10	0.10	0.10
	327	2	<0.10			0.10	0.10
calcium	325	2	37.2	413.0	403.0	449.0	421.6
	326	3	37.2	817.0	722.0	757.0	765.3
	327	2	37.2			753.0	753.0
chemical oxygen demand (COD)	325	2	<1	11	17	11	13
	326	3	<1	17	16	20	17
	327	2	<1			<1	<1

Table V-18 (Continued)

PRIMARY ZINC TREATMENT PLANT SAMPLES - PLANT G

Pollutant (a)	Stream Code	Sample Type*	Concentrations (mg/l, except as noted) Source	Day 1	Day 2	Day 3	Average
Nonconventional Pollutants (Continued)							
chloride	325	2	5	214	112	119	148
	326	3	5	104	103	105	104
	327	2	5			96	96
cobalt	325	2	<0.05	0.05	0.10	0.05	0.06
	326	3	<0.05	<0.05	<0.05	<0.05	<0.05
	327	2	<0.05			<0.05	<0.05
fluoride	325	2	0.1	15	19	19	17
	326	3	0.1	6.3	11	11	9.4
	327	2	0.1			11	11
iron	325	2	0.30	41.8	46.3	43.8	43.9
	326	3	0.30	<0.05	<0.05	<0.05	<0.05
	327	2	0.30			<0.05	<0.05
magnesium	325	2	5.50	763.0	809.0	819.0	797
	326	3	5.50	476.0	464.0	517.0	485
	327	2	5.50			487.0	487.0
manganese	325	2	<0.05	128.0	129.0	136.0	131
	326	3	<0.05	2.95	3.70	4.65	3.7
	327	2	<0.05			7.5	7.5

Table V-18 (Continued)

PRIMARY ZINC TREATMENT PLANT SAMPLES - PLANT G

Pollutant (a)	Stream Code	Sample Type*	Concentrations (mg/l, except as noted) Source	Day 1	Day 2	Day 3	Average
Nonconventional Pollutants (Continued)							
molybdenum	325	2	<0.05	<0.05	<0.05	<0.05	<0.05
	326	3	<0.05	<0.05	<0.05	<0.05	<0.05
	327	2	<0.05			<0.05	<0.05
phenolics	325	1	<0.005	<0.005	<0.005	<0.005	<0.005
	326	1	<0.005	<0.005	<0.005	0.006	0.002
	327	1	<0.005			<0.005	<0.005
phosphate	325	2	0.26	<0.01	<0.01	<0.01	<0.01
	326	3	0.26	<0.01	<0.01	<0.01	<0.01
	327	2	0.26			<0.01	<0.01
sodium	325	2	4.10	147.0	146.0	158.0	150
	326	3	4.10	143.0	131.0	144.0	139
	327	2	4.10			147.0	147.0
sulfate	325	2	36	11,300	11,000	5,670	9,320
	326	3	36	3,990	3,470	3,510	3,660
	327	2	36			3,420	3,420
tin	325	2	0.50	<0.5	<0.5	<0.5	<0.5
	326	3	0.50	<0.5	<0.5	<0.5	<0.5
	327	2	0.50			<0.5	<0.5

Table V-18 (Continued)

PRIMARY ZINC TREATMENT PLANT SAMPLES - PLANT G

Pollutant (a)	Stream Code	Sample Type*	Concentrations (mg/l, except as noted) Source	Day 1	Day 2	Day 3	Average
Nonconventional Pollutants (Continued)							
titanium	325	2	<0.05	0.6	0.65	0.60	0.6
	326	3	<0.05	<0.05	<0.05	<0.05	<0.05
	327	2	<0.05			<0.05	<0.05
total dissolved solids (TDS)	325	2	189	16,500	16,400	17,200	16,700
	326	3	189	6,120	6,130	6,370	6,210
	327	2	189			6,170	6,170
total organic carbon (TOC)	325	2	3	6	5	4	5
	326	3	3	9	3	3	5
	327	2	3			1	1
total solids (TS)	325	2	200	7,010	17,500	16,800	13,770
	326	3	200	6,250	6,210	6,420	6,300
	327	2	200			6,100	6,100
vanadium	325	2	<0.05	<0.05	<0.05	<0.05	<0.05
	326	3	<0.05	<0.05	<0.05	<0.05	<0.05
	327	2	<0.05			<0.05	<0.05
yttrium	325	2	<0.05	<0.05	<0.05	<0.05	<0.05
	326	3	<0.05	<0.05	<0.05	<0.05	<0.05
	327	2	<0.05			<0.05	<0.05

Table V-18 (Continued)

PRIMARY ZINC TREATMENT PLANT SAMPLES - PLANT G

Pollutant (a)	Stream Code	Sample Type*	Source	Concentrations (mg/l, except as noted) Day 1	Day 2	Day 3	Average
Conventional Pollutants							
oil and grease	325	1	3	6	<1	<1	2
	326	1	3	<2	<1	<1	1.3
	327	1	3			<1	<1
total suspended solids (TSS)	325	2	1	27	33	32	30
	326	3	1	14	16	14	14
	327	2	1			16	16
pH (standard units)	325	2	6	2.2	1.5	1.5	
	326	3	6	9.9	9.3	8.8	
	327	2	6			8.4	

* - $\leq$ 0.010 mg/l

** - $\leq$ 0.005 mg/l

(a) All toxic pollutant fractions were analyzed

(b) Detection limit raised due to interference

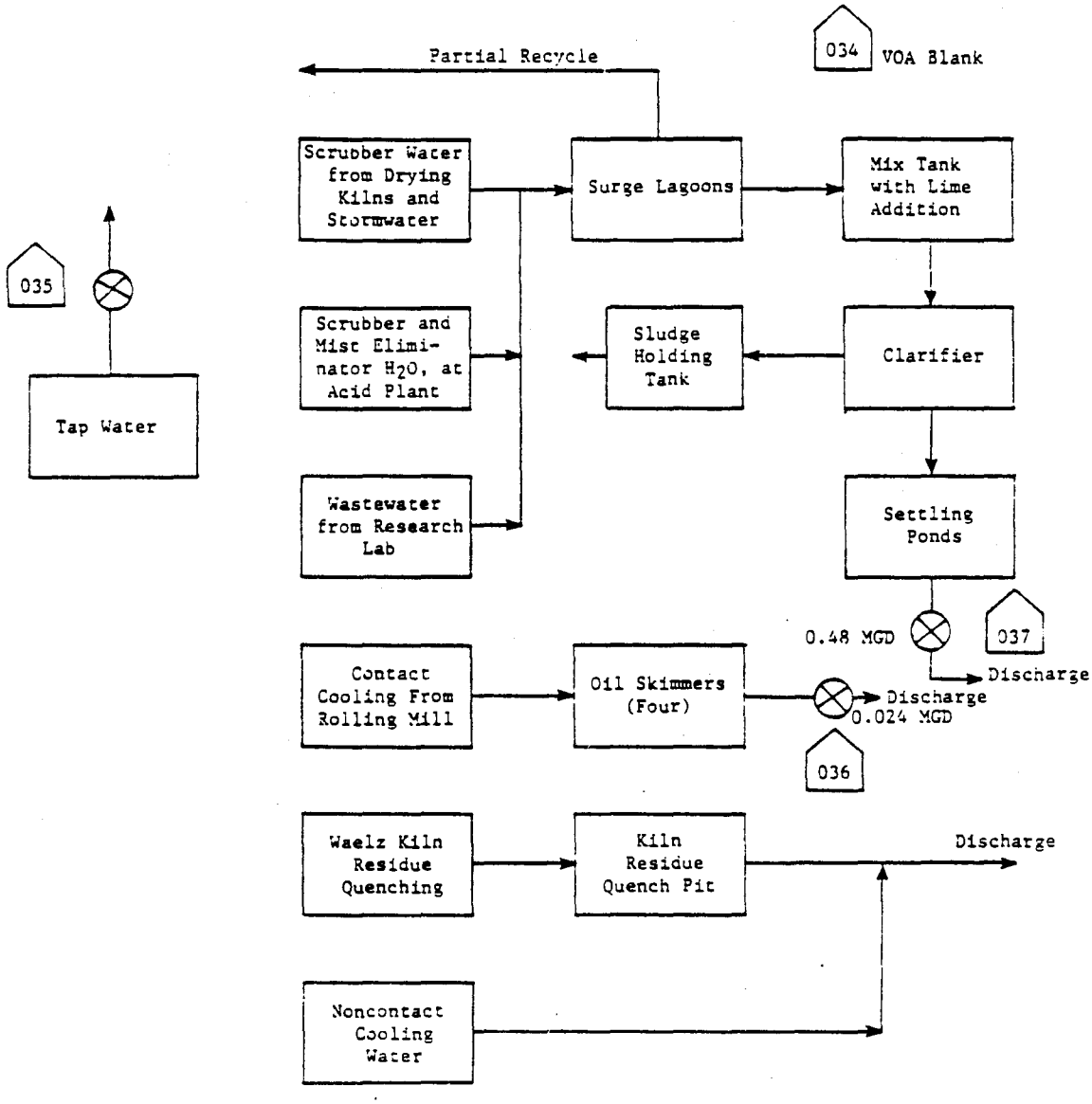

Figure V-1

SAMPLING SITES AT PRIMARY ZINC PLANT A

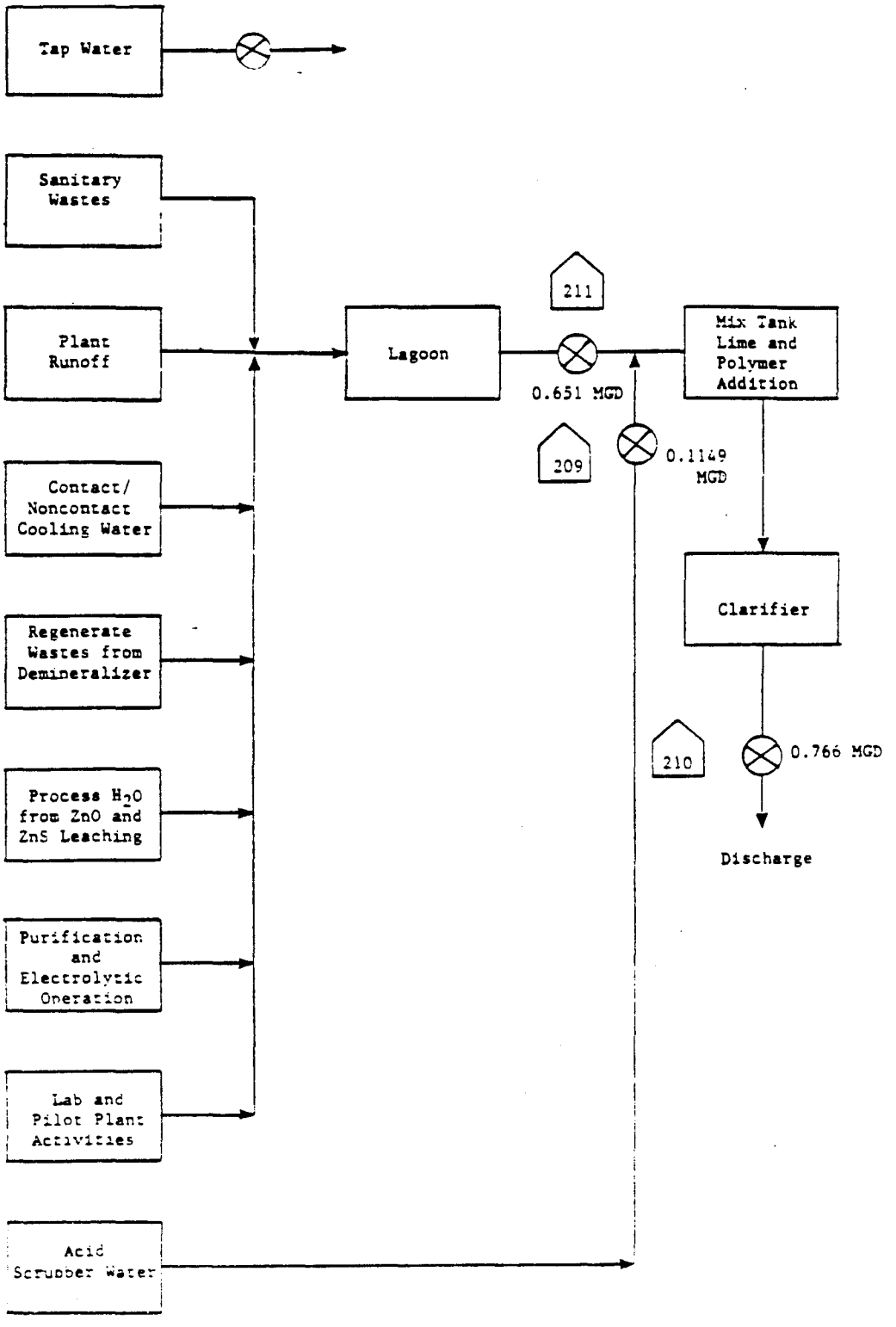

Figure V-2

SAMPLING SITES AT PRIMARY ZINC PLANT B

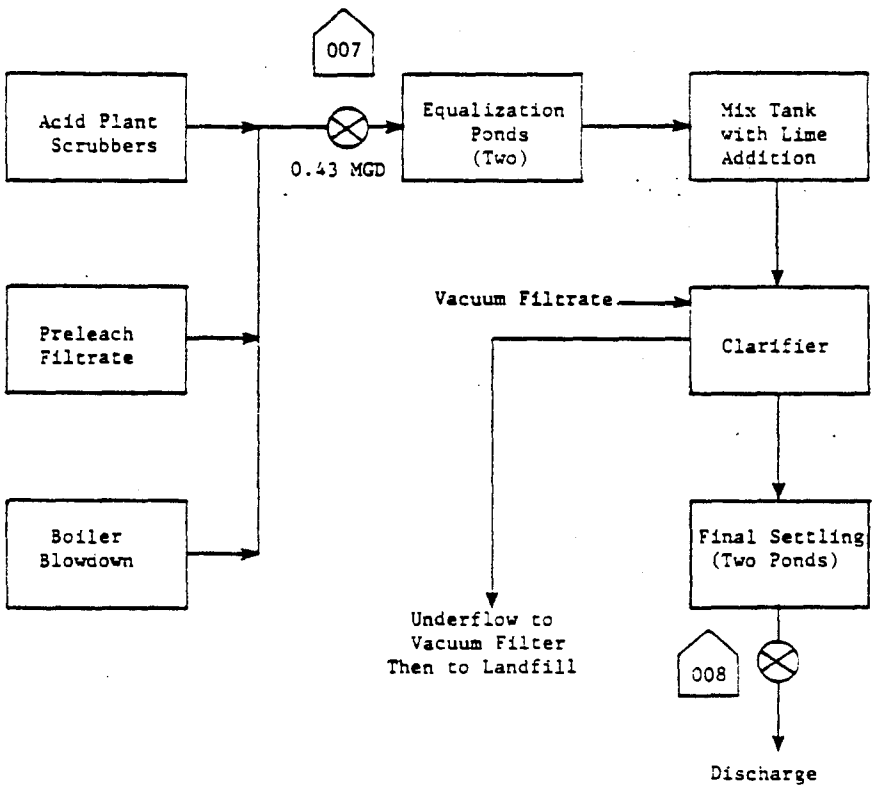

Figure V-3

SAMPLING SITES AT PRIMARY ZINC PLANT C

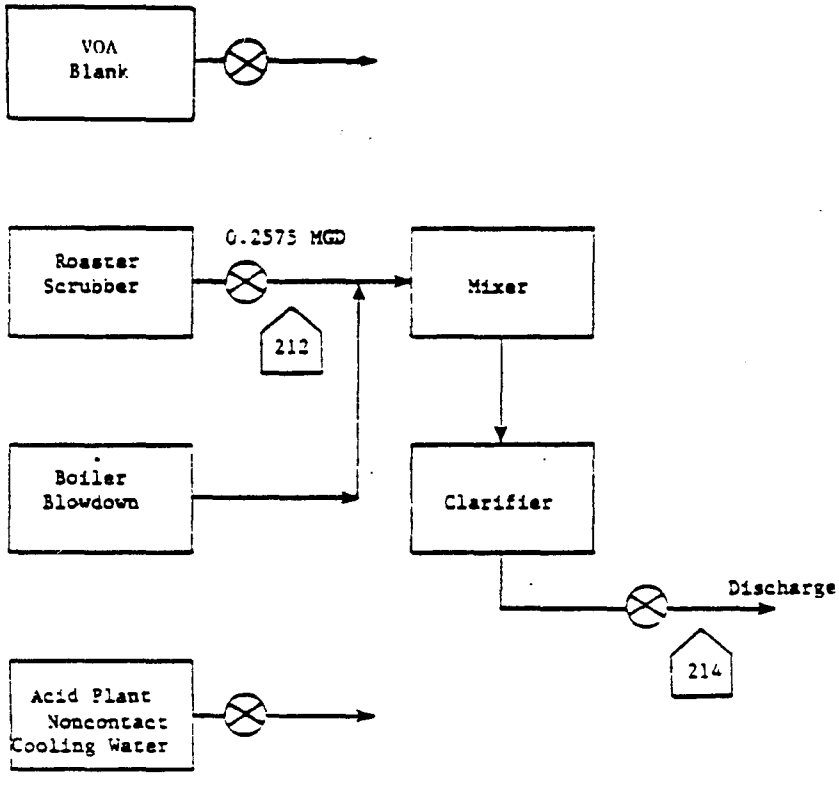

Figure V-4

SAMPLING SITES AT PRIMARY ZINC PLANT D

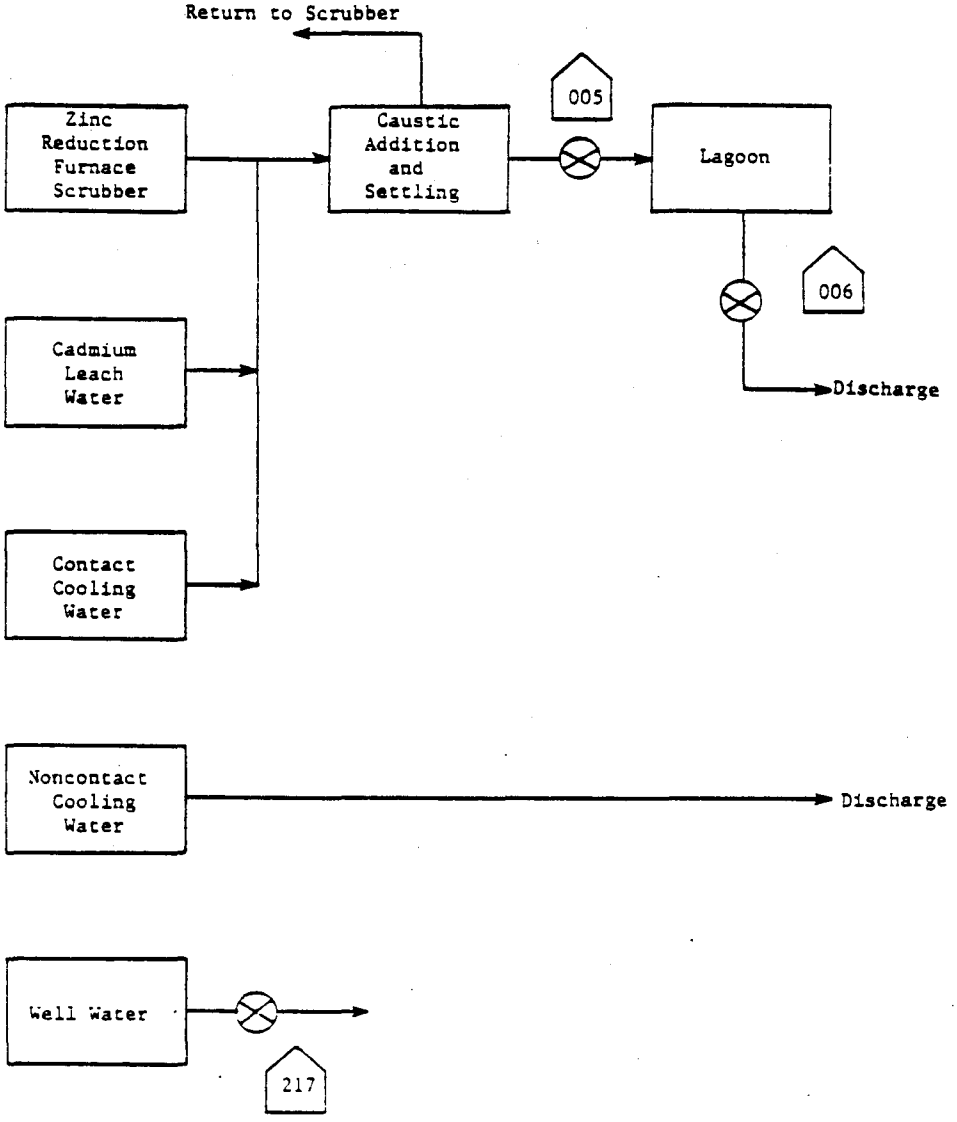

Figure V-5

SAMPLING SITES AT PRIMARY ZINC PLANT E

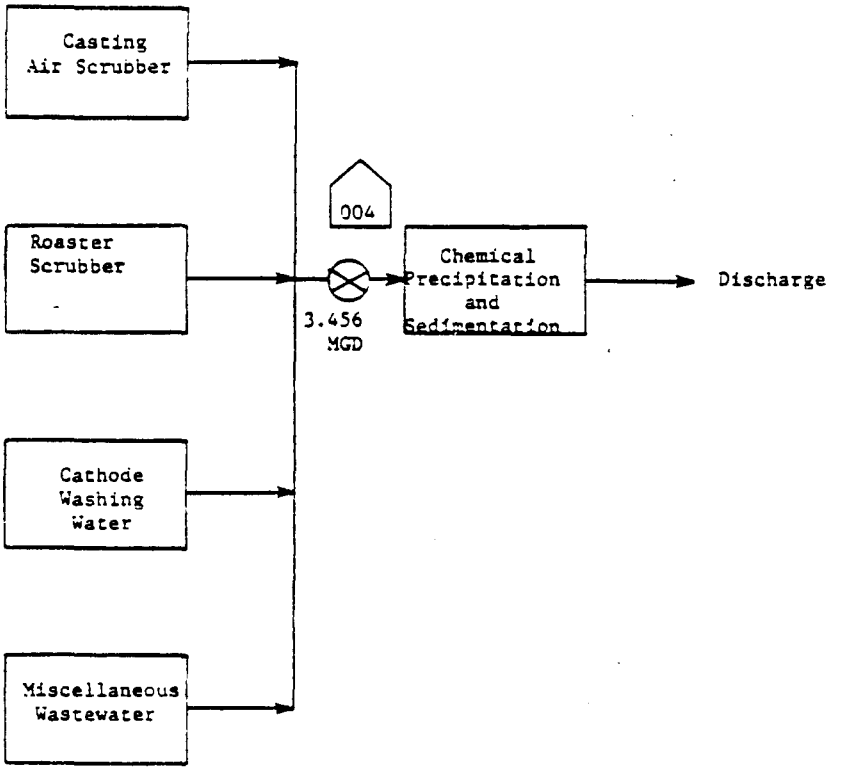

Figure V-6

SAMPLING SITES AT PRIMARY ZINC PLANT F

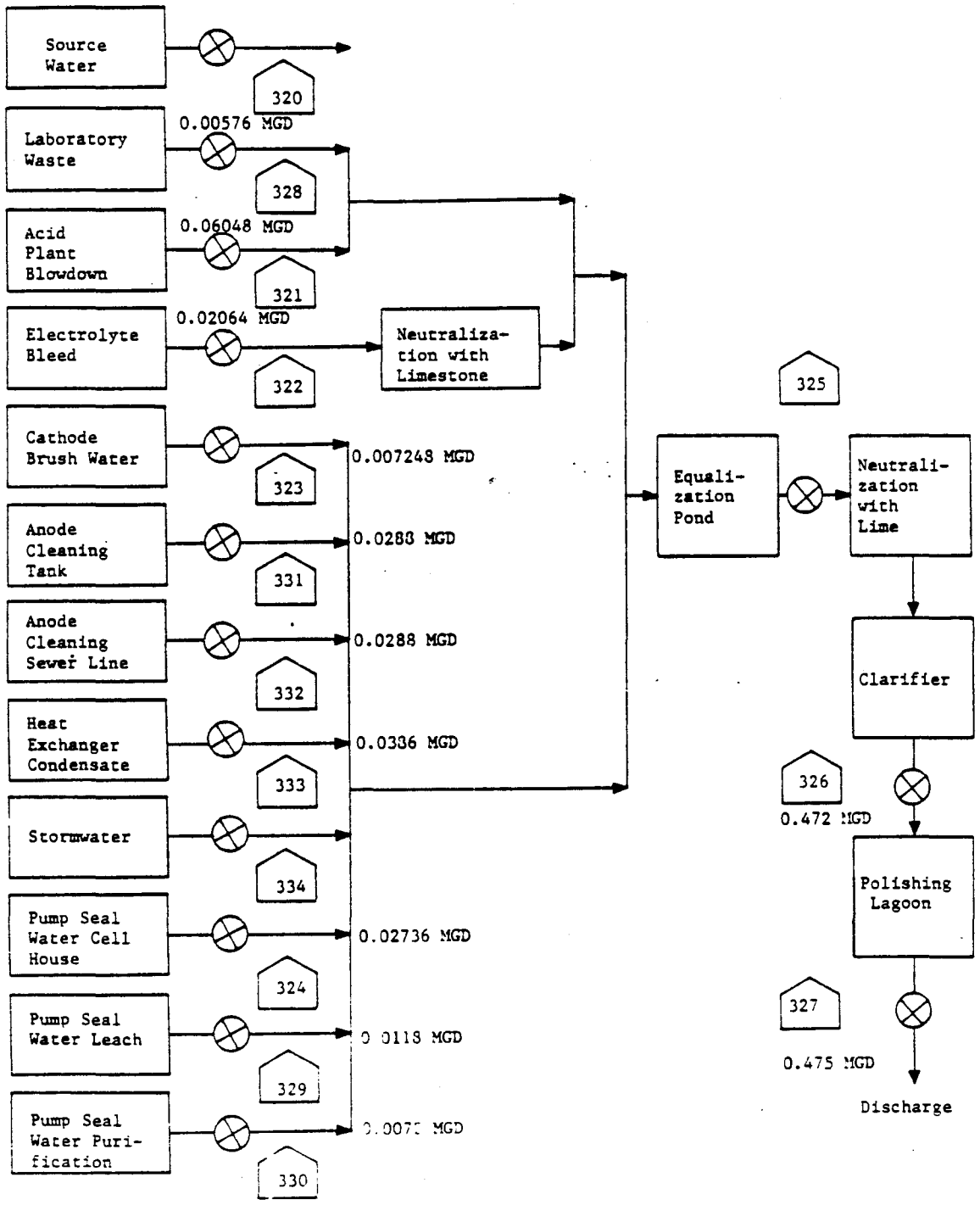

Figure V-7

SAMPLING SITES AT PRIMARY ZINC PLANT G

SECTION VI

SELECTION OF POLLUTANT PARAMETERS

This section examines chemical analysis data presented in section V from primary zinc plants and discusses the selection or exclusion of pollutants for potential limitation. The basis for the regulation of toxic and other pollutants is discussed in Section VI of Vol. 1. Additionally, each pollutant selected for potential limitation is discussed there. That discussion provides information about where the pollutant originates (i.e., whether it is a naturally occurring substance, processed metal, or a manufactured compound); general physical properties and the form of the pollutant; toxic effects of the pollutant in humans and other animals; and behavior of the pollutant in POTW at the concentrations expected in industrial discharges.

The discussion that follows describes the analysis that was performed to select or exclude pollutants for consideration for limitations and standards. Pollutants are considered for limitations and standards if they are present in concentrations treatable by the technologies considered in this analysis. The treatable concentrations used for the toxic metals were the long-term performance values achievable by lime precipitation, sedimentation, and filtration. The treatable concentrations used for the toxic organics were the long-term performance values achievable by carbon adsorption.

As discussed in Section V, EPA collected additional wastewater sampling data after proposal in an attempt to further characterize the primary zinc subcategory. As a result of the new data, the Agency revised its pollutant frequency of occurrence analysis. However, the same pollutants selected for further consideration for limitation at proposal have been selected for consideration at promulgation as discussed below.

After proposal, the Agency also re-evaluated the treatment performance of activated carbon adsorption to control toxic organic pollutants. The treatment performance for the acid extractable, base-neutral extractable, and volatile organic pollutants has been set equal to the analytical quantification limit of 0.010 mg/l. The analytical quantification limit for pesticides and total phenols (by 4-AAP method) is 0.005 mg/l, which is below the 0.010 mg/l accepted for the other toxic organics. However, to be consistent, the treatment performance of 0.010 mg/l is used for pesticides and total phenols. The 0.010 mg/l concentration is achievable, assuming enough carbon is used in the column and a suitable contact time is allowed. The frequency of occurrence for 36 of the toxic pollutants has been redetermined based on the revised treatment performance value. However, the revised frequency counts did not change the pollutants selected for consideration for limitation at proposal.

CONVENTIONAL AND NONCONVENTIONAL POLLUTANT PARAMETERS

This study considered samples from the primary zinc subcategory for three conventional pollutant parameters (oil and grease, total suspended solids, and pH) and three nonconventional pollutant parameters (chemical oxygen demand, total organic carbon, and total phenols).

CONVENTIONAL AND NONCONVENTIONAL POLLUTANT PARAMETERS SELECTED

The following conventional pollutant parameters were selected for limitation in this subcategory:

Total suspended solids (TSS)
pH

TSS concentrations ranged from 9 to 1,600 mg/l. Current treatment technology can reduce the TSS concentration to 2.6 mg/l. Treatable concentrations of TSS were found in all ten samples analyzed. Also, most of the specific methods used to remove toxic metal do so by chemical precipitation, and the resulting toxic metal-containing precipitants should not be discharged. Therefore, total suspended solids are selected for limitation in this subcategory.

A pH range of 0.7 to 2.7 was observed in the ten raw wastewater samples. Many deleterious effects are caused by acidic pH values, or by rapid change in pH. Effective removal of toxic metals by chemical precipitation requires careful control of pH. Therefore, pH is selected for limitation in this subcategory.

TOXIC POLLUTANTS

The frequency of occurrence of the toxic pollutants in the raw wastewater samples taken is presented in Table VI-1 (page 1590). These data provide the basis for the categorization of specific pollutants, as discussed below. Table VI-1 is based on the raw wastewater data from streams 4, 322, 323, and 332 (see Section V). These streams include the data the Agency collected at an electrolytic zinc plant after proposal. Treatment plant sampling data were not used in the frequency count.

TOXIC POLLUTANTS NEVER DETECTED

The toxic pollutants listed in Table VI-2 (page 1594) were not detected in any wastewater samples from this subcategory; therefore, they are not selected for consideration in establishing limitations:

TOXIC POLLUTANTS NEVER FOUND ABOVE THEIR ANALYTICAL QUANTIFICATION LIMIT

The toxic pollutants listed in Table VI-3 (page 1596) were never found above their analytical quantification concentration in any

wastewater samples from this subcategory; therefore, they are not selected for consideration in establishing limitations.

TOXIC POLLUTANTS PRESENT BELOW CONCENTRATIONS ACHIEVABLE BY TREATMENT

The pollutants listed below are not selected for consideration in establishing limitations because they were not found in any wastewater samples from this subcategory above concentrations considered achievable by existing or available treatment technologies. These pollutants are discussed individually following the list.

123. mercury
125. selenium

Mercury was detected above its analytical quantification limit in two of ten raw wastewater samples. The two reported concentrations are 0.01 mg/l and 0.008 mg/l. These concentrations are below the 0.036 mg/l concentration considered attainable by identified treatment technology. Therefore, mercury is not selected for limitation.

Selenium was detected above its analytical quantification limit in one of ten raw wastewater samples taken from the primary zinc subcategory. The concentration of selenium in the sample was 0.02 mg/l. This value is below the 0.20 mg/l concentration considered attainable by identified treatment technology. Therefore, selenium is not selected for limitation.

TOXIC POLLUTANTS DETECTED IN A SMALL NUMBER OF SOURCES

Toxic pollutants detectable in the effluent from only a small number of sources within the subcategory and uniquely related to only those sources are not appropriate for limitation in a national regulation. The following pollutants were not selected for limitation on this basis.

4. benzene
11. 1,1,1-trichloroethane
22. parachlorometa-cresol
38. ethylbenzene
44. methylene chloride
66. bis(2-ethylhexyl) phthalate
68. di-n-butyl phthalate
69. di-n-octyl phthalate
86. toluene

Although these pollutants were not selected for consideration in establishing nationwide limitations, it may be appropriate, on a case-by-case basis, for the local permit writer to specify effluent limitations.

Benzene was found above its treatable concentration (0.010 mg/l) in one of ten samples with a concentration of 0.018 mg/l.

Analysis of two other samples from the same raw wastewater stream did not detect benzene. Also, no other streams at that same plant contained this pollutant. In the dcp, all responding plants indicated that this pollutant was known to be absent or believed to be absent. For these reasons, benzene is not selected for limitation.

1,1,1- Trichloroethane was detected above its treatable concentration (0.01 mg/l) in one of ten samples with a concentration of 0.017 mg/l. Since 1,1,1-trichloroethane was found in only one waste stream and since in the dcp all responding plants indicated that this pollutant was known to be absent or believed to be absent, it is not selected for limitation.

Parachlorometa-cresol was detected above its treatable concentration (0.010 mg/l) in two of ten samples with the concentrations of 0.014 and 0.042 mg/l from the same raw wastewater stream. Analysis of a third sample from the same raw wastewater stream reported no parachlorometa-cresol. In the dcp, all responding plants indicated that this pollutant was known to be absent or believed to be absent. Therefore, it is not selected for limitation.

Ethylbenzene was found above its treatable concentration (0.01 mg/l) in two of ten samples with concentrations of 0.051 mg/l and 0.044 mg/l. Analysis of four other samples from the same raw wastewater streams detected no ethylbenzene. For these reasons, and since in the dcp all responding plants indicated that this pollutant was known to be absent or believed to be absent, it is not selected for limitation.

Methylene chloride was detected above its treatable concentration (0.010 mg/l) in five of ten samples with concentrations of ranging from 0.015 to 0.4 mg/l. This pollutant is not attributable to specific materials or processes associated with the primary zinc subcategory, however, it is a common solvent used in analytical laboratories. For these reasons, methylene chloride is not selected for limitation.

Bis(2-ethylhexyl) phthalate was found above both its analytical quantification limit and its treatable concentration (0.010 mg/l) in four of 10 samples, with a maximum concentration of 0.243 mg/l. The presence of this pollutant is not attributable to materials or processes associated with the primary zinc subcategory. It is commonly used as a plasticizer in laboratory and field sampling equipment. EPA suspects sample contamination as the source of this pollutant. Also, in the dcp all responding plants indicated that this pollutant was known to be absent or believed to be absent. Therefore, bis(2-ethylhexyl) phthalate is not selected for limitation.

One of ten samples analyzed for di-n-butyl phthalate was found to contain a concentration above its analytical quantification limit. This sample was above the 0.010 mg/l concentration

considered achievable with treatment. The presence of this pollutant is not attributable to materials or processes associated with the secondary lead subcategory. It is commonly used as a plasticizer in laboratory and field sampling equipment. EPA suspects sample contamination as the source of this pollutant. Also, in the dcp all responding plants indicated that this pollutant was known to be absent or believed to be absent. It is thus not selected for limitation.

Di-n-octyl phthalate was found above its analytical quantification limit (0.010 mg/l) in one of ten samples. The presence of this pollutant is not attributable to materials or processes associated with the primary zinc subcategory. It is commonly used as a plasticizer in laboratory and field sampling equipment. EPA suspects sample contamination as the source of this pollutant. Also, in the dcp all responding plants indicated that this pollutant was known to be absent or believed to be absent. Therefore, di-n-octyl phthalate is not selected for limitation.

Toluene was detected in three of ten samples. All three detections occurred in three separate raw wastewater streams from the same plant. Additional samples from these streams did not contain toluene. Two of the measured concentrations were above the treatable concentration (0.010 mg/l), with values of 0.016 mg/l and 0.019 mg/l. In the dcp, all responding plants indicated that this pollutant was known to be absent or believed to be absent. For these reasons, and since toluene was detected only at one plant, it is not selected for limitation.

TOXIC POLLUTANTS SELECTED FOR FURTHER CONSIDERATION FOR ESTABLISHING LIMITATIONS AND STANDARDS

The pollutants listed below are selected for consideration for establishing limitations and standards for this subcategory. The toxic pollutants selected are discussed individually following the list.

115. arsenic
116. asbestos
118. cadmium
119. chromium
120. copper
122. lead
124. nickel
126. silver
128. zinc

Arsenic was detected above its analytical quantification limit in two of ten raw wastewater samples taken from the primary zinc subcategory. The concentration of arsenic was 0.4 mg/l in both raw wastewater samples. This concentration is above the 0.34 mg/l concentration considered attainable by identified treatment technology. Therefore, arsenic is selected for further consideration for limitation.

Asbestos was detected in the only raw wastewater sample taken from the primary zinc subcategory with a concentration of 68 million fibers per liter (MFL). This value is above the 10 MFL considered attainable by identified treatment technology. There fore, asbestos is selected for consideration for limitation.

Cadmium was detected above its analytical quantification limit in two of ten raw wastewater samples taken from the primary zinc subcategory. The concentration of cadmium in the samples was 6.8 mg/l and 8.3 mg/l. These values are above the 0.049 mg/l concentration considered attainable by identified treatment technology. Therefore, cadmium is selected for further consideration for limitation.

Chromium was detected above its analytical quantification limit in nine of ten raw wastewater samples taken from the primary zinc subcategory. The concentration of chromium in the samples ranged from 0.04 mg/l to 1.2 mg/l. Seven of the nine values are above the 0.07 mg/l concentration considered attainable by identified treatment technology. Therefore, chromium is selected for further consideration for limitation.

Copper was detected above its analytical quantification limit in seven of ten raw wastewater samples taken from the primary zinc subcategory. The concentration of copper in the samples ranged from 0.10 mg/l to 1.9 mg/l. Four of the seven values are above the 0.039 mg/l concentration considered attainable by identified treatment technology. Therefore, copper is selected for further consideration for limitation.

Lead was detected above its analytical quantification limit in five of ten raw wastewater samples taken from the primary zinc subcategory. The concentration of lead in the samples ranged from 0.05 mg/l to 40.4 mg/l. Four of the five values are above the 0.08 mg/l concentration considered attainable by identified treatment technology. Therefore, lead is selected for further consideration for limitation.

Nickel was detected above its analytical quantification limit in five of ten raw wastewater samples taken from the primary zinc subcategory. The concentration of nickel in the raw wastewater samples ranged from 0.08 mg/l to 0.25 mg/l. Two of the five samples are above the 0.22 mg/l concentration considered attainable by identified treatment technology. Nickel is an extremely toxic pollutant and its discharge should be carefully monitored. Therefore, nickel is selected for further consideration for limitation.

Silver was detected above its analytical quantification limit in five of ten raw wastewater samples taken from the primary zinc subcategory. The concentration of silver in the samples ranged from 0.01 mg/l to 0.18 mg/l. Two of the five values are above 0.07 mg/l concentration considered attainable by identified treatment technology. Therefore, silver is selected for further

consideration for limitation.

Zinc was detected above its analytical quantification limit in all ten of the raw wastewater samples taken from the primary zinc subcategory. The concentration of zinc in the samples ranged from 259 mg/l to 24,000 mg/l. These values are well above the 0.23 mg/l concentration considered attainable by identified treatment technology. Therefore, zinc is selected for further consideration for limitation.

Table VI-1

FREQUENCY OF OCCURRENCE OF TOXIC POLLUTANTS
PRIMARY ZINC
RAW WASTEWATER

Pollutant	Analytical Quantification Concentration (mg/l)(a)	Treatable Concentration (mg/l)(b)	Number of Streams Analyzed	Number of Samples Analyzed	ND	Detected Below Quantification Concentration	Detected Below Treatable Concentration	Detected Above Treatable concentration
1. acenaphthene	0.010	0.010	4	10	9	1		
2. acrolein	0.010	0.010	4	10	10			
3. acrylonitrile	0.010	0.010	4	10	10			
4. benzene	0.010	0.010	4	10	9			1
5. benzidine	0.010	0.010	4	10	10			
6. carbon tetrachloride	0.010	0.010	4	10	10			
7. chlorobenzene	0.010	0.010	4	10	10			
8. 1,2,4-trichlorobenzene	0.010	0.010	4	10	10			
9. hexachlorobenzene	0.010	0.010	4	10	10			
10. 1,2 dichloroethane	0.010	0.010	4	10	10			
11. 1,1,1-trichloroethane	0.010	0.010	4	10	2	7		1
12. hexachloroethane	0.010	0.010	4	10	10			
13. 1,1-dichloroethane	0.010	0.010	4	10	10			
14. 1,1,2-trichloroethane	0.010	0.010	4	10	10			
15. 1,1,2,2-tetrachloroethane	0.010	0.010	4	10	10			
16. chloroethane	0.010	0.010	4	10	10			
17. bis(chloromethyl) ether	0.010	0.010	4	10	10			
18. bis(2-chloroethyl) ether	0.010	0.010	4	10	8	2		
19. 2-chloroethyl vinyl ether	0.010	0.010	4	10	10			
20. 2-chloronaphthalene	0.010	0.010	4	10	10			
21. 2,4,6-trichlorophenol	0.010	0.010	4	10	9	1		
22. parachlorometa cresol	0.010	0.010	4	10	8			2
23. chloroform	0.010	0.010	4	10	2	8		
24. 2-chlorophenol	0.010	0.010	4	10	10			
25. 1,2-dichlorobenzene	0.010	0.010	4	10	10			
26. 1,3-dichlorobenzene	0.010	0.010	4	10	10			
27. 1,4-dichlorobenzene	0.010	0.010	4	10	10			
28. 3,3'-dichlorobenzidine	0.010	0.010	4	10	10			
29. 1,1-dichloroethylene	0.010	0.010	4	10	10			
30. 1,2-trans-dichloroethylene	0.010	0.010	4	10	10			
31. 2,4 dichlorophenol	0.010	0.010	4	10	10			
32. 1,2-dichloropropane	0.010	0.010	4	10	10			
33. 1,3-dichloropropylene	0.010	0.010	4	10	10			
34. 2,4-dimethylphenol	0.010	0.010	4	10	8	2		
35. 2,4-dinitrotoluene	0.010	0.010	4	10	10			
36. 2,6-dinitrotoluene	0.010	0.010	4	10	10			
37. 1,2-diphenylhydrazine	0.010	0.010	4	10	10			

Table VI-1 (Continued)

FREQUENCY OF OCCURRENCE OF TOXIC POLLUTANTS
PRIMARY ZINC
RAW WASTEWATER

Pollutant	Analytical Quantification Concentration (mg/l)(a)	Treatable Concentration (mg/l)(b)	Number of Streams Analyzed	Number of Samples Analyzed	ND	Detected Below Quantification Concentration	Detected Below Treatable Concentration	Detected Above Treatable Concentration
38. ethylbenzene	0.010	0.010	4	10	8			2
39. fluoranthene	0.010	0.010	4	10	9	1		
40. 4-chlorophenyl phenyl ether	0.010	0.010	4	10	10			
41. 4-bromophenyl phenyl ether	0.010	0.010	4	10	10			
42. bis(2-chloroisopropyl) ether	0.010	0.010	4	10	10			
43. bis(2-chloroethoxy) methane	0.010	0.010	4	10	10			
44. methylene chloride	0.010	0.010	4	10	3	1	1	5
45. methyl chloride	0.010	0.010	4	10	10			
46. methyl bromide	0.010	0.010	4	10	10			
47. bromoform	0.010	0.010	4	10	3	7		
48. dichlorobromomethane	0.010	0.010	4	10	9	1		
49. trichlorofluoromethane	0.010	0.010	4	10	10			
50. dichlorodifluoromethane	0.010	0.010	4	10	10			
51. chlorodibromomethane	0.010	0.010	4	10	10			
52. hexachlorobutadiene	0.010	0.010	4	10	10			
53. hexachlorocyclopentadiene	0.010	0.010	4	10	10			
54. isophorone	0.010	0.010	4	10	10			
55. naphthalene	0.010	0.010	4	10	10			
56. nitrobenzene	0.010	0.010	4	10	9	1		
57. 2 nitrophenol	0.010	0.010	4	10	8	2		
58. 4-nitrophenol	0.010	0.010	4	10	9	1		
59. 2,4-dinitrophenol	0.010	0.010	4	10	10			
60. 4,6-dinitro-o-cresol	0.010	0.010	4	10	10			
61. N-nitrosodimethylamine	0.010	0.010	4	10	10			
62. N-nitrosodiphenylamine	0.010	0.010	4	10	8	2		
63. N-nitrosodi-n-propylamine	0.010	0.010	4	10	10			
64. pentachlorophenol	0.010	0.010	4	10	10			
65. phenol	0.010	0.010	4	10	8	2		
66. bis(2-ethylhexyl) phthalate	0.010	0.010	4	10	2	4		4
67. butyl benzyl phthalate	0.010	0.010	4	10	10			
68. di-n-butyl phthalate	0.010	0.010	4	10	2	7		1
69. di-n-octyl phthalate	0.010	0.010	4	10	9			1
70. diethyl phthalate	0.010	0.010	4	10	8	2		
71. dimethyl phthalate	0.010	0.010	4	10	10			
72. benzo(a)anthracene	0.010	0.010	4	10	10			
73. benzo(a)pyrene	0.010	0.010	4	10	10			
74. 3,4-benzofluoranthene	0.010	0.010	4	10	10			

Table VI-1 (Continued)

FREQUENCY OF OCCURRENCE OF TOXIC POLLUTANTS
PRIMARY ZINC
RAW WASTEWATER

Pollutant	Analytical Quantification Concentration (mg/l)(a)	Treatable Concentration (mg/l)(b)	Number of Streams Analyzed	Number of Samples Analyzed	ND	Detected Below Quantification Concentration	Detected Below Treatable Concentration	Detected Above Treatable Concentration
75. benzo(k)fluoranthene	0.010	0.010	4	10	10			
76. chrysene	0.010	0.010	4	10	9	1		
77. acenaphthylene	0.010	0.010	4	10	10			
78. anthracene (c)	0.010	0.010	4	10	10			
79. benzo(ghi)perylene	0.010	0.010	4	10	10			
80. fluorene	0.010	0.010	4	10	8	2		
81. phenanthrene (c)	0.010	0.010	4	10	9	1		
82. dibenzo(a,h)anthracene	0.010	0.010	4	10	10			
83. indeno(1,2,3-cd)pyrene	0.010	0.010	4	10	10			
84. pyrene	0.010	0.010	4	10	8	2		
85. tetrachloroethylene	0.010	0.010	4	10	8	2		
86. toluene	0.010	0.010	4	10	7	1		2
87. trichloroethylene	0.010	0.010	4	10	7	3		
88. vinyl chloride	0.010	0.010	4	10	10			
89. aldrin	0.005	0.010	4	10	10			
90. dieldrin	0.005	0.010	4	10	10			
91. chlordane	0.005	0.010	4	10	10			
92. 4,4'-DDT	0.005	0.010	4	10	10			
93. 4,4'-DDE	0.005	0.010	4	10	10			
94. 4,4'-DDD	0.005	0.010	4	10	10			
95. alpha-endosulfan	0.005	0.010	4	10	9	1		
96. beta-endosulfan	0.005	0.010	4	10	10			
97. endosulfan sulfate	0.005	0.010	4	10	10			
98. endrin	0.005	0.010	4	10	10			
99. endrin aldehyde	0.005	0.010	4	10	9	1		
100. heptachlor	0.005	0.010	4	10	9	1		
101. heptachlor epoxide	0.005	0.010	4	10	8	2		
102. alpha-BHC	0.005	0.010	4	10	5	5		
103. beta-BHC	0.005	0.010	4	10	5	5		
104. gamma-BHC	0.005	0.010	4	10	8	2		
105. delta-BHC	0.005	0.010	4	10	5	5		
106. PCB-1242 (d)	0.005	0.010	4	10	10			
107. PCB-1254 (d)	0.005	0.010	3	8	8			
108. PCB-1221 (d)	0.005	0.010	3	8	8			
109. PCB-1232 (e)	0.005	0.010	4	10	10			
110. PCB-1248 (e)	0.005	0.010	3	8	8			
111. PCB-1260 (e)	0.005	0.010	3	8	8			
112. PCB-1016 (e)	0.005	0.010	3	8	8			

Table VI-1 (Continued)

FREQUENCY OF OCCURRENCE OF TOXIC POLLUTANTS
PRIMARY ZINC
RAW WASTEWATER

Pollutant	Analytical Quantification Concentration (mg/l)(a)	Treatable Concentration (mg/l)(b)	Number of Streams Analyzed	Number of Samples Analyzed	ND	Detected Below Quantification Concentration	Detected Below Treatable Concentration	Detected Above Treatable Concentration
113. toxaphene	0.005	0.010	4	10	10			
114. antimony	0.100	0.47	4	10	9	1		
115. arsenic	0.010	0.34	4	10	5		3	2
116. asbestos	10 MFL	10 MFL	1	1				1
117. beryllium	0.010	0.20	4	10	10			
118. cadmium	0.002	0.49	4	10	8			2
119. chromium	0.005	0.07	4	10	1		2	7
120. copper	0.009	0.39	4	10	3		3	4
121. cyanide	0.02 (f)	0.047	4	10	9	1		
122. lead	0.020	0.08	4	10	5		1	4
123. mercury	0.0001	0.036	4	10	8		2	
124. nickel	0.005	0.22	4	10	5		3	2
125. selenium	0.01	0.20	3	6	5		1	
126. silver	0.02	0.07	4	10	1	4	3	2
127. thallium	0.100	0.34	4	8	8			
128. zinc	0.050	0.23	4	10				10
129. 2,3,7,8-tetrachlorodibenzo-p-dioxin (TCDD)		Not Analyzed						

(a) Analytical quantification concentration was reported with the data (see Section V).

(b) Treatable concentrations are based on performance of lime precipitation, sedimentation, and filtration for toxic metal pollutants and activated carbon adsorption for toxic organic pollutants.

(c),(d),(e) Reported together for two samples.

(f) Analytical quantification concentration for EPA Method 335.2, Total Cyanide Methods for Chemical Analysis of Water and Wastes, EPA-600/4-79-020, March 1979.

TABLE VI-2

TOXIC POLLUTANTS NEVER DETECTED

2. acrolein
3. acrylonitrile
5. benzidine
6. carbon tetrachloride (tetrachloromethane)
7. chlorobenzene
8. 1,2,4-trichlorobenzene
9. hexachlorobenzene
10. 1,2-dichloroethane
12. hexachloroethane
13. 1,1-dichloroethane
14. 1,1,2-trichloroethane
15. 1,1,2,2-tetrachloroethane
16. chloroethane
17. DELETED
19. 2-chloroethyl vinyl ether
20. 2-chloronaphthalene
24. 2-chlorophenol
25. 1,2-dichlorobenzene
26. 1,3-dichlorobenzene
27. 1,4-dichlorobenzene
28. 3,3'-dichlorobenzidine
29. 1,1-dichloroethylene
30. 1,2-trans-dichloroethylene
31. 2,4-dichlorophenol
32. 1,2-dichloropropane
33. 1,3-dichloropropylene
35. 2,4-dinitrotoluene
36. 2,6-dinitrotoluene
37. 1,2-diphenylhydrazine
40. 4-chlorophenyl phenyl ether
41. 4-bromophenyl phenyl ether
42. bis(2-chloroisopropyl) ether
43. bis(2-chloroethoxy) methane
45. methyl chloride
46. methyl bromide
49. DELETED
50. DELETED
51. chlorodibromomethane
52. hexachlorobutadiene
53. hexachlorocyclopentadiene
54. isophorone
55. naphthalene
59. 2,4-dinitrophenol
60. 4,6-dinitro-o-cresol
61. N-nitrosodimethylamine
63. N-nitrosodi-n-propylamine
64. pentachlorophenol
67. butyl benzyl phthalate
71. dimethyl phthalate
72. benzo(a)anthracene
73. benzo(a)pyrene

TABLE VI-2 (Continued)

TOXIC POLLUTANTS NEVER DETECTED

74.	3,4-benzofluoranthene	
75.	benzo(k)fluoranthene	
77.	acenaphthylene	
78.	anthracene	(a)
79.	benzo(ghi)perylene	
82.	dibenzo(a,h)anthracene	
83.	indeno (1,2,3-cd)pyrene	
88.	vinyl chloride	
89.	aldrin	
90.	dieldrin	
91.	chlordane	
92.	4,4'-DDT	
93.	4,4'-DDE	
94.	4,4'-DDD	
96.	beta-endosulfan	
97.	endosulfan sulfate	
98.	endrin	
106.	PCB-1242	(b)
107.	PCB-1254	(b)
108.	PCB-1221	(b)
109.	PCB-1232	(c)
110.	PCB-1248	(c)
111.	PCB-1260	(c)
112.	PCB-1016	(c)
113.	toxaphene	
117.	beryllium	
127.	thallium	
129.	2,3,7,8-tetrachlorodibenzo-p-dioxin (TCDD)	

(a) Reported with phenanthrene for two samples.

(b),(c) Reported together for two samples.

TABLE VI-3

TOXIC POLLUTANTS NEVER FOUND ABOVE THEIR ANALYTICAL QUANTIFICATION LIMIT

1. acenaphthene
18. bis(chloromethyl)ether
21. 2,4,6-trichlorophenol
23. chloroform
34. 2,4-dimethyl phenol
39. fluoranthene
47. bromoform
48. dichlorobromomethane
56. nitrobenzene
57. 2-nitrophenol
58. 4-nitrophenol
62. N-nitrosodiphenylamine
65. phenol
70. diethyl phthalate
76. chrysene
80. fluorene
81. phenanthrene (a)
84. pyrene
85. tetrachloroethylene
87. trichloroethylene
95. alpha-endosulfan
99. endrin aldehyde
100. heptachlor
101. heptachlor epoxide
102. alpha-BHC
103. beta-BHC
104. gamma-BHC
105. delta-BHC
114. antimony
121. cyanide (total)

(a) Reported with anthracene as a combined value for two samples.

SECTION VII

CONTROL AND TREATMENT TECHNOLOGIES

The preceding sections of this supplement discussed the waste water sources, flows and characteristics of the wastewaters from primary zinc plants. This section summarizes the description of these wastewaters and indicates the treatment technologies which are currently practiced in the primary zinc subcategory.

TECHNICAL BASIS OF BPT

EPA promulgated BPT effluent limitations guidelines for the primary zinc subcategory on February 27, 1975. The BPT effluent limitations limited the discharge of arsenic, cadmium, selenium, zinc, and TSS and required the control of pH. The best practicable control technology currently available is the reuse or recycle of specific wastewater to minimize discharge and treatment of the remaining wastewater by lime precipitation and sedimentation. Specific water reuse and recycle measures included are recycle of casting contact cooling water, and the minimization of acid plant blowdown through water reuse and recycle. Acid plant blowdown is included in the BPT effluent limitations for both the primary zinc and metallurgical acid plants subcategories. However, this double counting of limitations is eliminated in the promulgated BAT effluent limitations for this rulemaking.

CURRENT CONTROL AND TREATMENT PRACTICES

This section presents a summary of the control and treatment technologies that are currently being applied to each of the wastewater sources in this subcategory. As discussed in Section V, wastewater associated with the primary zinc subcategory is characterized by the presence of the toxic metal pollutants and suspended solids. The raw (untreated) wastewater data for specific sources as well as combined waste streams is presented in Section V. Generally, these pollutants are present in each of the waste streams at treatable concentrations, so these waste streams are commonly combined for treatment to reduce the concentrations of these pollutants. Construction of one wastewater treatment system for combined treatment allows plants to take advantage of economies of scale and, in some instances, to combine streams of differing alkalinity to reduce treatment chemical requirements. Six plants in this subcategory currently have combined wastewater treatment systems, three have lime precipitation and sedimentation, and two have lime precipitation, sedimentation and filtration. One plant practices lime precipitation and sedimentation and sulfide precipitation and filtration. One of the two plants operating lime and settle also utilizes sulfide precipitation periodically. As such, three options have been selected for consideration for BAT, BDT, and pretreatment in this subcategory, based on combined treatment of

these compatible waste streams.

ZINC REDUCTION FURNACE WET AIR POLLUTION CONTROL

In the pyrolytic production of zinc, zinc oxide is reduced to metallic zinc in vertical retort or electrothermic furnaces. The off-gases from this process may be treated by wet air pollution control equipment to remove particulate matter, uncondensed zinc, and carbon monoxide. One of the pyrolytic zinc plants currently uses wet scrubbers on its electrothermic furnaces. The wastewater from the wet scrubbers is treated by chemical precipitation (with NaOH) and sedimentation. Following treatment, approximately 88 percent of the scrubbing liquor is recycled.

PRELEACH WASTEWATER

Two plants preleach zinc concentrates to control magnesium in the electrolytic circuit. At one plant, the wastewater is equalized with other process wastewater, then treated with lime precipitation and sedimentation before discharge. The second plant currently is not operating this process. However, when operating, the preleach wastewater is treated with other plant wastewater in a lime precipitation and sedimentation treatment system.

LEACHING WET AIR POLLUTION CONTROL

Contact scrubbers are used at two of the electrolytic plants to control leaching air emissions. One of the pyrolytic plants also uses leaching scrubbers in its cadmium recovery process. One of the plants (the pyrolytic plant) completely recycles its scrubbing liquor. One of the electrolytic plants completely evaporates the scrubber liquor in an evaporation pond. The third plant did not report its discharge rate, however, it did report that recycling is used to reduce the discharge from the leaching scrubbers. Wastewater from this plant is treated by chemical precipitation (with lime) and sedimentation. A polymer flocculant is added to aid in the settling of solids.

ELECTROLYTE BLEED WASTEWATER

One plant bleeds a portion of the spent electrolyte after electrolysis to control magnesium. This wastewater is neutralized with limestone, then mixed with other plant process water before entering central treatment. Central treatment consists of lime precipitation and sedimentation.

CATHODE AND ANODE WASHING WASTEWATER

Several plants report that wastewater is produced from electrolytic zinc refining operations. At three plants this wastewater is associated with the washing of cathodes and anodes. The two plants which wash cathodes and anodes use chemical precipitation and sedimentation to treat their waste streams.

The third plant reuses the wash water in roaster scrubbers after settling in a holding pond. Lime is the usual precipitating agent used. Polymer is also sometimes used as a flocculant.

CASTING WET AIR POLLUTION CONTROL

Particulates produced from the melting of cathode zinc prior to casting are removed by air pollution control devices. Three of the electrolytic plants use baghouses to remove melting furnace emissions. Another electrolytic plant that is now shut down used wet scrubbers. The scrubbing liquor was discharged for treatment by chemical precipitation and sedimentation.

CASTING CONTACT COOLING

Four of the nine plants in this subcategory report wastewater associated with casting contact cooling. Two plants achieve zero discharge through evaporation of the contact cooling wastewater. Other plants limit the discharge of contact cooling wastewater through partial evaporation and recycle. Partial evaporation results when the cooling water vaporizes after contacting the cast zinc. At two plants in this subcategory, contact cooling wastewater is combined with wastewater from other processes and treated by chemical precipitation (a polymer flocculant is used by one of the plants to aid in the settling of solids) and sedimentation. One of these plants also uses a polishing filter.

CADMIUM PLANT WASTEWATER

Wastewater from cadmium plants may originate from various sources such as cadmium sponge washing, leaching tank discharge, or rinsing cadmium balls. Four plants report wastewater associated with their cadmium plants. One plant recycles its cadmium plant wastewater. Two plants use chemical precipitation and sedimentation (filtration is also used at one plant) to treat their wastewater. The fourth plant practices precipitation with caustic, filtration, and sulfide precipitation and filtration, followed by lime neutralization before discharge to an evaporation impoundment.

CONTROL AND TREATMENT OPTIONS

The Agency considered three control and treatment technology options that are applicable to the primary zinc subcategory. These options, discussed below, were selected after examination of the raw wastewater data, which showed the presence of toxic metal pollutants and TSS.

Examination of the raw wastewater data does not show any toxic organic pollutants at or above treatable concentrations. Also, organic pollutants are not characteristic of the raw materials and processing agents used in this subcategory. Therefore, Option E, which includes activated carbon adsorption, was not considered as an appropriate treatment technology.

OPTION A

Option A for the primary zinc subcategory is equivalent to the BPT control and treatment technologies. The BPT end-of-pipe treatment scheme consists of chemical precipitation and sedimentation. Chemical precipitation and sedimentation consists of lime addition to precipitate metals followed by gravity sedimentation for the removal of suspended solids, including the metal precipitates.

OPTION B

Option B for the primary zinc subcategory consists of the chemical precipitation and sedimentation considered in Option A, plus in-plant reduction of process wastewater flow. Water recycle and reuse are the control mechanisms for flow reduction.

OPTION C

Option C for the primary zinc subcategory includes sulfide precipitation and sedimentation followed by multimedia filtration technology added at the end of the Option B treatment scheme, which consists of chemical precipitation, sedimentation, and in-process flow reduction. Extensive treatment performance data submitted to the Agency by two properly designed plants in the subcategory demonstrate that the proposed BAT mass limitations are not achievable. The principal reason for not being able to attain the filtration performance data is the inability to achieve the combined metals data lime and settle values. However, the Agency believes the addition of sulfide precipitation, in conjunction with multimedia filtration, will achieve the treatment performance values as proposed (see Section X - Option Selection). Multimedia filtration is used to remove suspended solids, including precipitates of metals, beyond the concentrations attainable by gravity sedimentation. The filter suggested is the gravity, mixed-media type, although other forms of filters such as rapid sand filters or pressure filters also perform satisfactorily.

TREATMENT TECHNOLOGIES REJECTED AT PROPOSAL

Two additional treatment technologies were considered prior to proposing effluent limitations for this subcategory as discussed below. Activated alumina and reverse osmosis were rejected because they were not demonstrated in the nonferrous metals manufacturing category nor were they readily transferable from other categories. These options are discussed below.

OPTION D

Option D for the primary zinc subcategory consisted of the chemical precipitation, sedimentation, in-process flow reduction, and multimedia filtration technologies considered in Option C with the addition of activated alumina technology at the end of the Option C treatment scheme. Option D was considered as the

technology basis because it could, in theory, reduce arsenic concentrations in wastewaters generated from primary zinc smelters.

OPTION F

Option F for the primary zinc subcategory consisted of reverse osmosis and evaporation technology added to the treatment scheme of Option C, which consisted of chemical precipitation, sedimentation, in-process flow reduction, and multimedia filtration. Option F was provided for complete recycle of the treated water by controlling the concentration of dissolved solids. Multiple effect evaporation was included to dewater the brines rejected from reverse osmosis.

Page Intentionally Blank

SECTION VIII

COSTS, ENERGY AND NONWATER QUALITY ASPECTS

This section presents the costs associated with the control and treatment technologies identified in Section VII for wastewaters from primary zinc plants. The energy consumption of each technology is presented, and the effect of each technology on non-water quality aspects of the environment, such as air pollution, are discussed.

TREATMENT OPTIONS CONSIDERED

Three treatment options have been considered since proposal for the primary zinc subcategory. These options are summarized below and are schematically presented in Figures X-1 through X-3 (pages 1629 - 1631).

OPTION A

Option A consists of chemical precipitation and sedimentation (lime and settle) technology applied to combined wastewater streams. Option A represents no additional cost since this technology is in place at all plants in the primary zinc subcategory.

OPTION B

Option B consists of in-process flow reduction measures added to the chemical precipitation and sedimentation (lime and settle) technology of Option A. Specifically, flow reduction measures include the recycle of zinc reduction furnace scrubber water, casting scrubber water, leaching scrubber water, and the recycle of casting contact cooling water. Flow reduction for wet air pollution control liquor is based on holding tanks, while contact cooling water flow is reduced through the use of cooling towers.

OPTION C

Option C consists of the in-process flow reduction measures of Option B, and chemical precipitation and sedimentation, sulfide precipitation and sedimentation, and multimedia filtration end-of-pipe treatment technology.

COST METHODOLOGY

A detailed discussion of the methodology used to develop the compliance costs is presented in Section VIII of the General Development Document. Plant-by-plant compliance costs have been estimated for the nonferrous metals manufacturing category and are presented in the administrative record supporting this regulation. A comparison of the costs developed for proposal and

Preceding page blank

the revised costs for the regulation are presented in Tables VIII-1 and VIII-2 (page 1507) for the direct and indirect dischargers.

Each of the major assumptions used to develop compliance costs is presented in Section VIII of Vol. I. However, each subcategory contains a unique set of waste streams requiring certain subcategory-specific assumptions to develop compliance costs. Seven major assumptions are discussed briefly below.

(1) Capital and annual costs for plants discharging wastewater in both the primary zinc and metallurgical acid plants subcategories were attributed to each subcategory on a flow-weighted basis.

(2) Because the compliance costs need only represent incremental costs which primary zinc plants may be expected to incur in complying with this regulation, annual costs for in-place treatment used to comply with the promulgated BPT regulation for this subcategory were not included in a plant's total cost of compliance for this regulation.

(3) Zero discharge of the leaching scrubber water is accomplished by 100 percent recycle through a holding tank.

(4) Sludge generated by the sulfide precipitation and settle process was considered hazardous waste for disposal purposes.

(5) Recycle of zinc reduction furnace scrubber liquor and casting scrubber liquor is based on recycle through holding tanks. Annual costs associated with maintenance and sludge disposal are included in the estimated compliance costs. If a plant currently recycles scrubber liquor, capital costs of the recycle equipment (piping, pumps, and holding tanks) were not included in the compliance costs. (6) Recycle of casting contact cooling water is accomplished with cooling towers. Annual costs associated with maintenance and chemical treatment to prevent biological growth, corrosion, and scale formation are included in the estimated compliance costs. If a plant currently recycles casting contact cooling water, capital costs of the recycle equipment (piping, pumps, and cooling tower) were not included in the compliance costs.

NONWATER QUALITY ASPECTS

Nonwater quality impacts specific to the primary zinc subcategory, including energy requirements, solid waste and air pollution, are discussed below.

ENERGY REQUIREMENTS

The methodology used for determining the energy requirements for the various treatment options is discussed in Section VIII of the General Development Document. No additional energy is required for Option A as a result of this regulation since BPT is in place. Energy requirements for Options B and C are 0.02 MW-hr/yr and 0.08 MW-hr/yr, respectively. These values include the energy requirements of lime precipitation and sedimentation technology for plants without this technology in place. Option C represents less than one percent of a typical plant's electrical energy usage. It is therefore concluded that the energy requirements of the treatment options considered will have no significant impact on total plant energy consumption.

SOLID WASTE

Sludges associated with the primary zinc subcategory will necessarily contain additional quantities (and concentrations) of toxic metal pollutants. Wastes generated by primary smelters and refiners are currently exempt from regulation by Act of Congress (Resource Conservation and Recovery Act (RCRA)), Section 3001(b). Consequently, sludges generated from treating primary industries' wastewater are not presently subject to regulation as hazardous wastes.

Sludges generated by lime precipitation, sedimentation, and filtration are not likely to exhibit a characteristic of hazardous waste. By the addition of excess lime during treatment, similar sludges, specifically toxic metal bearing sludges, generated by other industries such as the iron and steel industry passed the Extraction Procedure (EP) toxicity test. See 40 CFR 261.24. The Agency believes that the wastewater sludges will similarly not be EP toxic if the recommended technology is applied.

However, the technology basis for the primary zinc subcategory also includes sulfide precipitation for the control of zinc, cadmium, and other toxic metals. The Agency believes sludge generated through sulfide precipitation (followed by sedimentation) will be classified as hazardous under RCRA. The costs of hazardous waste disposal for sulfide sludges were considered in the economic analysis for this subcategory (even though the waste is now exempt), and they were determined to be economically achievable.

The Agency estimates implementation of lime and settle, in conjunction with sulfide precipitation and settle technology, will generate approximately 235 tons per year of wastewater treatment sludge. Sulfide precipitation will generate approximately 35 tons per year of this total. Multimedia filtration technology will not generate any significant amount of sludge over that resulting from lime precipitation and sulfide precipitation.

Although it is the Agency's view that solid wastes generated as a result of lime precipitation are not expected to be hazardous, generators of these wastes must test the waste to determine if the wastes meet any of the characteristics of hazardous waste (see 40 CFR 262.11).

If these wastes should be identified or are listed as hazardous, they will come within the scope of RCRA's "cradle to grave" hazardous waste management program, requiring regulation from the point of generation to point of final disposition. EPA's generator standards would require generators of hazardous nonferrous metals manufacturing wastes to meet containerization, labeling, recordkeeping, and reporting requirements; if plants dispose of hazardous wastes off-site, they would have to prepare a manifest which would track the movement of the wastes from the generator's premises to a permitted off-site treatment, storage, or disposal facility. See 40 CFR 262.20 45 FR 33142 (May 19, 1980), as amended at 45 FR 86973 (December 31, 1980). The transporter regulations require transporters of hazardous wastes to comply with the manifest system to assure that the wastes are delivered to a permitted facility. See 40 CFR 263.20 45 FR 33151 (May 19, 1980), as amended at 45 FR 86973 (December 31, 1980). Finally, RCRA regulations establish standards for hazardous waste treatment, storage, and disposal facilities allowed to receive such wastes. See 40 CFR Part 464 46 FR 2802 (January 12, 1981), 47 FR 32274 (July 26, 1982).

Even if these wastes are not identified as hazardous, tney still must be disposed of in compliance with the Subtitle D open dumping standards, implementing 4004 of RCRA. See 44 FR 53438 (September 13, 1979). The Agency has calculated as part of the costs for wastewater treatment the cost of hauling and disposing of these wastes. For more details, see Section VII of the General Development Document.

AIR POLLUTION

There is no reason to believe that any substantial air pollution problems will result from the implementation of flow reduction, chemical precipitation and sedimentation, and filtration. These technologies generally transfer pollutants to solid waste and do not involve air stripping or any other physical process likely to transfer pollutants to air. Minor amounts of sulfur may be emitted during sulfide precipitation, and water vapor containing some particulate matter will be released in the drift from cooling tower systems which are used for recycling casting contact cooling water. However, the Agency does not consider this impact to be significant.

TABLE VIII-1

COST OF COMPLIANCE FOR THE PRIMARY ZINC SUBCATEGORY
DIRECT DISCHARGERS

Option	Proposal Capital Cost	Proposal Annual Cost	Promulgation Capital Cost	Promulgation Annual Cost
A	0	0	0	0
B	310000	64000	94000	55000
C	3498000	2215000	457000	236000

TABLE VIII-2

COST OF COMPLIANCE FOR THE PRIMARY ZINC SUBCATEGORY
INDIRECT DISCHARGERS

Option	Proposal Capital Cost	Proposal Annual Cost	Promulgation Capital Cost	Promulgation Annual Cost
A	*	*	0	0
B	*	*	2900	4600
C	*	*	112000	58000

NOTE: All values in March, 1982 Dollars

* EPA did not promulgate pretreatment standards for existing sources in the primary zinc subcategory.

Page Intentionally Blank

SECTION IX

BEST PRACTICABLE TECHNOLOGY CURRENTLY AVAILABLE

EPA promulgated BPT effluent limitations for the primary zinc subcategory on February 27, 1975 as Subpart H of 40 CFR Part 421. At this time, EPA is not proposing any modifications to these existing BPT effluent limitations. The BPT effluent limitations apply to discharges resulting from the production of primary zinc by either electrolytic or pyrolytic means, as well as discharge resulting from the by-product recovery of sulfuric acid in primary zinc acid plants.

Discharges from primary zinc acid plants are also regulated at BPT in the metallurgical acid plants subcategory. This modification of the metallurgical acid plants subcategory to include primary zinc acid plants, without deletion of the BPT acid plant allowance provided in the primary zinc subcategory, creates the potential for double counting of the BPT acid plant allowance at primary zinc plants. However, EPA believes that existing permits at these plants will be modified to reflect the BAT requirements where there is no such double counting. Therefore, this apparent inconsistency should not have any actual effect on existing permits. Pollutants regulated by these limitations are arsenic, cadmium, selenium, zinc, TSS, and pH. The effluent limitations established by BPT standards are based on chemical precipitation and sedimentation and are as follows:

	Effluent Limitations	
Effluent Characteristic	Maximum for Any One Day	Average of Daily Values for 30 Consecutive Days Shall Not Exceed
	Metric Units (kg/kkg of product) English Units (lb/1,000 lb of product)	
TSS	0.42	0.21
As	0.0016	0.0008
Cd	0.008	0.004
Se	0.08	0.04
Zn	0.08	0.04
pH	Within the range of 6.0 to 9.0	

Page Intentionally Blank

SECTION X

BEST AVAILABLE TECHNOLOGY ECONOMICALLY ACHIEVABLE

The effluent limitations are based on the best control and treatment technology used by a specific point source within the industrial category or subcategory, or by another industry where it is readily transferable. Emphasis is placed on additional treatment techniques applied at the end of the treatment systems currently employed for BPT, as well as reduction of the amount of water used and discharged, process control, and treatment technology optimization.

The factors considered in assessing best available technology economically achievable (BAT) include the age of equipment and facilities involved, the process used, process changes, nonwater quality environmental impacts (including energy requirements), and the costs of application of such technology (Section 304(b)(2)(B) of the Clean Water Act). BAT represents the best available technology economically achievable at plants of various ages, sizes, processes, or other characteristics. Where the Agency has found the existing performance to be uniformly inadequate, BAT may be transferred from a different subcategory or category. BAT may include feasible process changes or internal controls, even when not in common industry practice.

The required assessment of BAT considers costs, but does not require a balancing of costs against effluent reduction benefits (see Weyerhaeuser v. Costle, 590 F.2d 1011 (D.C. Cir. 1978)). However, in assessing the proposed BAT, the Agency has given substantial weight to the economic achievability of the technology.

On February 27, 1975, EPA promulgated technology-based effluent BAT limitations for the primary zinc subcategory. The main purpose of these effluent guidelines was to limit quantities of total suspended solids, arsenic, cadmium, selenium, zinc, and the range of pH found in primary zinc discharges. EPA is amending the promulgated BAT effluent limitations for the primary zinc subcategory pursuant to the provisions of Sections 301, 304, 306, and 307 of the Clean Water Act and its amendments.

TECHNICAL APPROACH TO BAT

The Agency reviewed a wide range of technology options and evaluated the available possibilities to ensure that the most effective and beneficial technologies were used as the basis of BAT. To accomplish this, the Agency elected to examine three technology options which could be applied to the primary zinc subcategory as BAT options.

The three options examined for BAT are discussed below. The

first option considered is the same as the BPT treatment and control technology.

In summary, the treatment technologies considered for the primary zinc subcategory are:

Option A (Figure X-1, page 1629) is based on:

- o Chemical precipitation (lime) and sedimentation

Option B (Figure X-2, page 1630) is based on:

- o Chemical precipitation (lime) and sedimentation
- o In-process flow reduction of scrubber liquor and casting contact cooling water

Option C (Figure X-3, page 1631) is based on:

- o Chemical precipitation (lime) and sedimentation
- o In-process flow reduction of scrubber liquor and casting contact cooling water
- o Sulfide precipitation and sedimentation
- o Multimedia filtration

OPTION A

Option A for the primary zinc subcategory is equivalent to the BPT control and treatment technologies. The BPT end-of-pipe treatment scheme consists of chemical precipitation and sedimentation. Chemical precipitation and sedimentation consists of lime addition to precipitate metals followed by gravity sedimentation for the removal of suspended solids including metal precipitates (see Figure X-1, page 1629).

OPTION B

Option B for the primary zinc subcategory consists of the chemical precipitation and sedimentation technologies of Option A plus in-plant reduction of process wastewater flow (see Figure X-2, page 1630). Flow reduction measures, including in-process changes, result in the elimination of some wastewater streams and the concentration of pollutants in other effluents. As explained in Section VII of Vol. I, treatment of a more concentrated effluent allows achievement of a greater net pollutant removal and introduces the possible economic benefits associated with treating a lower volume of wastewater. Methods used in Option B to reduce process wastewater generation or discharge rates include the following:

Recycle of Water Used in Wet Air Pollution Control

Recycle or reuse of water used in wet air pollution control is being considered for BAT. There are three wastewater sources associated with wet air pollution control which are regulated under these effluent limitations:

1. Zinc reduction furnace wet air pollution control,
2. Leaching wet air pollution control, and
3. Casting.

Table X-1 (page 1622) presents the number of plants reporting wastewater use with these sources, the number of plants practicing recycle or reuse of scrubber liquor, and the range of recycle values being used. The water picks up particulates and fumes from the air, and a blowdown or periodic cleaning may be necessary to prevent the build-up of dissolved and suspended solids.

Recycle of Casting Contact Cooling Through Cooling Towers

Recycle of casting contact cooling water is being considered for BAT. The function of casting contact cooling water is to quickly remove heat from the cast zinc. Therefore, the principal requirement of the water is that it be cool.

There is sufficient industry experience with casting contact cooling wastewater within the nonferrous metals manufacturing category to assure the success of this technology using cooling towers or heat exchangers to cool the water prior to recycle (refer to Section VII of Vol. I). A blowdown or periodic cleaning may be needed to prevent a build-up of dissolved and suspended solids, which causes surface imperfections on the cast metal. (EPA has determined that a blowdown of 10 percent of the water applied in a process is adequate.)

OPTION C

Option C for the primary zinc subcategory consists of the in-process flow reduction, chemical precipitation, and sedimentation technologies of Option B plus sulfide precipitation, sedimentation, and multimedia filtration technology added at the end of the Option B treatment scheme (see Figure X-3, page 1631). Sulfide precipitation and sedimentation is added to reduce cadmium, zinc, and other toxic metal concentrations below concentrations achievable with lime and settle. Multimedia filtration is used to remove suspended solids, including precipitates of metals, beyond the concentration attainable by gravity sedimentation. The filter suggested is of the gravity, mixed media type, although other forms of filters, such as rapid sand filters or pressure filters, would perform satisfactorily.

INDUSTRY COST AND POLLUTANT REMOVAL ESTIMATES

As one means of evaluating each technology option, EPA developed estimates of the pollutant removal estimates and the compliance costs associated with each option. The methodologies are described below.

POLLUTANT REMOVAL ESTIMATES

A complete description of the methodology used to calculate the estimated pollutant removals achieved by the application of the various treatment options is presented in Section X of Vol. I. The pollutant removal estimates have been revised from proposal based on comments and new data. However, the methodology for calculating pollutant removals was not changed. The data used for estimating pollutant removals are the same as those used to revise the compliance costs.

Sampling data collected during the field sampling program were used to characterize the major waste streams considered for regulation. At each sampled facility, the sampling data were production normalized for each unit operation (i.e., mass of pollutant generated per mass of product manufactured). This value, referred to as the raw waste, was used to estimate the mass of toxic pollutants generated within the primary zinc subcategory. By multiplying the total subcategory production for a unit operation by the corresponding raw waste value, the mass of pollutant generated for that unit operation was estimated.

The volume of wastewater discharged after the application of each treatment option was estimated for each operation at each plant by comparing the actual discharge to the regulatory flow. The smaller of the two values was selected and summed with the other plant flows. The mass of pollutant discharged was then estimated by multiplying the achievable concentration values attainable by the option (mg/l) by the estimated volume of process wastewater discharged by the subcategory. The mass of pollutant removed is simply the difference between the estimated mass of pollutant generated within the subcategory and the mass of pollutant discharged after application of the treatment option. The total of both these calculations represents estimated mass loadings for the subcategory. The pollutant removal estimates for the direct dischargers in the primary zinc subcategory are presented in Table X-2 (page 1623).

COMPLIANCE COSTS

Compliance costs presented at proposal were estimated using cost curves, which related the total costs associated with installation and operation of wastewater treatment technologies to plant process wastewater discharge. EPA applied these curves on a per plant basis, a plant's costs -- both capital, and operating and maintenance -- being determined by what treatment it has in place and by its individual process wastewater discharge (from dcp). The final step was to annualize the capital

costs, and to sum the annualized capital cost, and the operating and maintenance costs, yielding the cost of compliance for the subcategory. Since proposal, the cost estimation methodology has been changed as discussed in Section VIII of this document and in Section VIII of the General Development Document. A design model and plant specific information were used to size a wastewater treatment system for each discharging facility. After completion of the design, capital and annual costs were estimated for each unit of the wastewater treatment system. Capital costs were developed from vendor quotes and annual costs were developed from literature. The revised compliance costs are presented in Table VIII-1 (page 1607).

BAT OPTION SELECTION - PROPOSAL

At proposal, EPA selected Option C without sulfide precipitation as the basis for BAT in this subcategory. The BAT treatment scheme proposed consisted of in-process wastewater flow reduction, chemical precipitation, sedimentation, and multimedia filtration. Wastewater flow reduction was based on increased recycle of scrubber water and casting contact cooling water. EPA proposed filtration as part of the BAT technology because this technology is demonstrated in the subcategory (two of five direct discharging plants presently have filters) and results in additional removal of toxic pollutants. In addition, filtration adds reliability to the treatment system by making it less susceptible to operator error and to sudden changes in raw wastewater flows and concentrations.

Other treatment technologies considered in Options D and F included activated alumina and reverse osmosis. Although these technologies are theoretically applicable to wastewaters generated in the primary zinc subcategory, they were rejected because they are not demonstrated in the nonferrous metals manufacturing category, nor are they clearly transferable.

BAT OPTION SELECTION - PROMULGATION

For promulgation, the Agency amended the proposed BAT technology basis for the primary zinc subcategory to include sulfide precipitation. The complete technology basis promulgated for BAT thus consists of in-process flow reduction through recycle and end-of-pipe lime and settle, sulfide precipitation (followed by sedimentation), and multimedia filtration technology. Extensive self-monitoring data were submitted through comments for the primary zinc subcategory. The data were analyzed statistically for comparison with the combined metals data base. In addition, design and operating parameters for the treatment systems from which the data were collected was solicited through Section 308 authority. The Agency has determined that data from one of the three plants should not be used to establish treatment effectiveness because of inadequate equalization of process wastewater prior to treatment. The treatment systems at the other two primary zinc plants submitting data appear to be properly designed. These plants appear to have problems

complying with the proposed zinc limitations due to extremely high influent zinc concentrations or to ammonia interferences not previously considered. However, the Agency believes the addition of sulfide precipitation, in conjunction with multimedia filtration, will achieve the treatment performance values as proposed based on the lower solubility of metal sulfides (i.e., lower than metal hydroxides) as well as performance data for this technology on inorganic chemical wastewaters. (Sulfide precipitation technology is discussed fully in Section VII of Vol. I.) Sulfide precipitation is currently demonstrated in the nonferrous metals manufacturing category at a cadmium plant in the primary zinc subcategory, at a primary molybdenum plant with a metallurgical acid plant, and at two secondary silver plants. Sulfide precipitation, in conjunction with lime, is also used occasionally at one primary electrolytic zinc facility.

EPA used data and information submitted through comments and solicited through Section 308 requests, as well as information obtained in an engineering site visit to a primary zinc plant, to revise the flow allowances for this subcategory. In the proposed mass limitations, a flow allowance was provided for leaching of zinc concentrates. The Agency has withdrawn this allowance and promulgated flow allowances for preleach and electrolyte bleed in its place. The Agency believes these revised flow allowances more accurately reflect operating practices at electrolytic zinc plants. The Agency has also revised the flow allowance for anode and cathode wash water based on an engineering site visit. These revisions are discussed in detail below.

Application of the proposed BAT effluent mass limitations will result in the removal of an estimated 1.16 million kg/yr of toxic pollutants above the estimated raw discharge rate. The final BAT effluent mass limitations will remove 1,260 kg/yr of toxic metals over the intermediate BAT option considered, which lacks filtration. Both options are economically achievable. The Agency believes that incremental removal (including additional removals of cadmium, one of the more toxic metals) justifies selection of filtration as part of BAT model technology. In addition, filtration is demonstrated at one primary zinc facility. The estimated capital investment cost of the promulgated BAT is $457,000 (March, 1982 dollars) and the estimated annualized cost is $236,000 (March, 1982 dollars).

WASTEWATER DISCHARGE RATES

Important operations in the electrolytic production of zinc are leaching, electrolysis, and casting. Reducing and casting are important operations in the pyrolytic production of zinc. All of these operations along with cadmium recovery are potential sources of wastewater and are evaluated to establish effluent limitations for the primary zinc subcategory.

Specific wastewater streams associated with the primary zinc subcategory are discharges from air pollution emission control devices for the zinc reduction furnace, casting melting furnace,

and leaching, and those from casting contact cooling, cathode and anode washing, preleaching, electrolyte bleed, and cadmium production. Table X-3 (page 1624) lists the production normalized wastewater discharge allowances allocated at BAT for these wastewater streams. The values represent the best existing practices of the subcategory, as determined from the analysis of dcp. The basis for the BAT discharge allowance is discussed below for each waste stream. Individual discharge rates from the plants surveyed are presented in Section V of this supplement for each wastewater stream.

ZINC REDUCTION FURNACE WET AIR POLLUTION CONTROL WASTEWATER

The BAT wastewater discharge allowance proposed for zinc reduction furnace wet air pollution control was 1,668 l/kkg (400 gal/ ton) of zinc reduced. This allowance was provided only for the users of wet air pollution control devices. Two pyrolytic plants used wet scrubbers to control reduction furnace emissions. Both plants practiced extensive recycle of their scrubbing wastewater. One plant practiced complete recycle while the other plant recycles 88 percent of the scrubbing liquor. Wastewater discharge rates are presented in Section V (Table V-1, page 1506). The proposed BAT discharge allowance was based on 90 percent recycle or reuse of the water used in the single discharging plant. Information on water use was not available at the plant which practices complete recycle.

The BAT wastewater discharge allowance used at promulgation is 1,668 l/kkg (400 gal/ton) of zinc reduced. This is equivalent to the BAT allowance used at proposal. The Agency received no new data or comments demonstrating that this allowance should be revised.

PRELEACH WASTEWATER

The BAT wastewater discharge allowance used at promulgation is 901 l/kkg (216 gal/ton) of concentrate leached. This allowance is based on the average of 14 discharge flow and production data points provided by the plant with this stream. The second plant with a preleach circuit is currently not operating this process and flow data were not available. This waste stream, along with electrolyte bleed, replaces the leaching waste stream which was proposed. The purpose of the leaching waste stream was to provide a means of removing magnesium from the electrolytic circuit. However, with the new data, more accurate flow allowances can be provided.

LEACHING WET AIR POLLUTION CONTROL WASTEWATER

At proposal, no BAT wastewater discharge allowance was provided for leaching wet air pollution control devices. Two of the five electrolytic plants used scrubbers to control leaching air emissions. One plant completely recycled its scrubbing water. Information on water discharge was not available for the other plant, however this plant reported that some recycle is used.

One of the pyrolytic plants reported that leaching wet air pollution control was used in its cadmium recovery process. Total recycle of the scrubbing liquor was practiced by this plant. Water use and discharge rates are presented for this stream in Table V-2 (page 1506). Since two out of three plants practiced total recycle of leaching wet air pollution control wastewater, the BAT allowance for leaching wet air pollution was zero discharge of wastewater pollutants.

For promulgation, no BAT wastewater pollutant discharge allowance is provided for leaching wet air pollution control. The Agency received no new data demonstrating that this allowance should be revised.

ELECTROLYTE BLEED WASTEWATER

The promulgated BAT wastewater discharge allowance for electrolyte bleed is 432 l/kkg (104 gal/ton) of cathode zinc produced. This rate is based on the discharge flow of the one plant with this waste stream. This stream, along with preleach, replaces the leaching waste stream which was proposed. The purpose of the leaching waste stream was to provide a means of removing magnesium from the electrolytic circuit. However, with the new data, more accurate flow allowances can be provided.

CATHODE AND ANODE WASHING WASTEWATER

The BAT wastewater discharge allowance proposed for cathode and anode washing wastewater was 19,850 l/kkg (4,760 gal/ton) of cathode zinc produced. Three plants discharge wastewater from cathode and anode washing. The BAT discharge allowance was based on the discharge from one of these plants. There was no information available on water use and discharge rates from the other plants to use in establishing the allowance.

The promulgated BAT wastewater discharge rate is 751 l/kkg (180 gal/ton) of cathode zinc produced. After proposal, the Agency collected flow and production data for this stream during a wastewater sampling effort. The discharge from this plant (#9060) is 751 l/kkg, which is the regulatory flow. The proposed regulatory flow was based on plant 281. Plant 281 reported an annual production for this process that is 128 times less than the capacity. It is apparent that the plant did not operate continuously over the period that the production data were collected. However, the annual wastewater flow was calculated from the plant daily discharge rate from the process based on 365 operating days per year because actual process operating hours were not reported in the dcp. The Agency does not believe the production normalized flow calculated for plant 281 is representative of a normal operating electrolytic process. Furthermore, plant 281 reported washing cathodes only, while plant 9060 washes both anodes and cathodes. For these reasons, EPA has modified the regulatory flow allowance based on the flow and production data collected during the sampling site visit at

plant 9060.

CASTING WET AIR POLLUTION CONTROL

The BAT discharge allowance proposed for casting wet air pollution control is 257 l/kkg (61.8 gal/ton) of zinc cast. This rate was allocated only for the users of wet air pollution control devices. The majority of electrolytic zinc plants used dry air pollution control devices at their casting plant. One plant used wet scrubbers to control melting furnace emissions. This plant did not recycle any of the scrubbing liquor. The proposed BAT discharge allowance was based on 90 percent recycle or reuse of the water used at the single discharging plant (refer to Section VII of the General Development Document). Since plants in this subcategory recycled other scrubber waters (such as zinc reduction furnace scrubber water or leaching scrubber water) at rates exceeding 90 percent, the Agency believed the single plant discharging casting wet air pollution control could achieve 90 percent recycle.

The promulgated BAT wastewater discharge rate for casting wet air pollution control is 257 l/kkg (61.8 gal/ton) of zinc cast. This is equivalent to the proposed BAT allowance. The Agency received no new data or comments demonstrating that this allowance should be revised.

CASTING CONTACT COOLING

The BAT wastewater allowance proposed for casting contact cooling was 181 l/kkg (43.4 gal/ton) of zinc cast. Four plants reported wastewater from contact cooling. Three of these plants did not recycle casting contact cooling water. The other plant evaporates all of its casting contact cooling water in a pond. The distribution of wastewater rates for casting contact cooling is presented in Table V-5 (page 1508). The proposed BAT discharge allowance was based on 90 percent recycle of the water used at three plants (based on 90 percent recycle of average water use). Information on water use and discharge was not available at the other plant.

The promulgated BAT wastewater discharge rate for casting contact cooling is 181 l/kkg (43.4 gal/ton) of zinc cast. This is equivalent to the proposed BAT allowance. The Agency received no new data or comments demonstrating that this allowance should be revised.

CADMIUM PLANT PRODUCTION

The BAT discharge allowance proposed for cadmium plant wastewater was 6,171 l/kkg (1,480 gal/ton) of cadmium produced. Four plants reported wastewater associated with cadmium production. One plant completely recycled cadmium plant wastewater. Recycle rates were not available from the other plants. The proposed BAT discharge allowance was based on the discharge rate at one of the plants. Information on water discharge rates was not reported by

the other plants. Water use and discharge rates are presented in Table V-6 (page 1508).

The promulgated BAT is based on a wastewater discharge allowance of 6,171 l/kkg (1,480 gal/ton) of cadmium produced. This is equivalent to the flow allowance basis for proposal of BAT. After proposal the Agency received flow and production data for this process from one plant previously not in the data base. However, the Agency did not receive comments demonstrating that this allowance should be revised.

REGULATED POLLUTANT PARAMETERS

In implementing 33 U.S.C. (1314(b)(2)(A and B)(1976)), the Agency placed particular emphasis on the toxic pollutants. The raw wastewater concentrations from individual operations and the subcategory as a whole were examined to select certain pollutants and pollutant parameters for consideration for limitation. This examination and evaluation, presented in Section VI, concluded that nine toxic pollutants are present in primary zinc wastewaters at concentrations that can be effectively reduced by identified treatment technologies.

However, the cost associated with analysis for toxic metal pollutants has prompted EPA to develop an alternative method for regulating and monitoring toxic pollutant discharges from the nonferrous metals manufacturing category. Rather than developing specific effluent mass limitations and standards for each of the toxic metals found in treatable concentrations in the raw wastewaters from a given subcategory, the Agency is proposing effluent mass limitations only for those pollutants generated in the greatest quantities as shown by the pollutant reduction benefit analysis. The pollutants selected for specific limitation are listed below:

118. cadmium
120. copper
122. lead
128. zinc

By establishing limitations and standards for certain toxic metal pollutants, dischargers will attain the same degree of control over toxic metal pollutants as they would have been required to achieve had all the toxic metal pollutants been directly limited.

This approach is technically justified since the treatment effectiveness concentrations used for lime precipitation and sedimentation technology are based on optimized treatment for concomitant multiple metals removal. Thus, even though metals have somewhat different theoretical solubilities, they will be removed at very nearly the same rate in a lime precipitation and sedimentation treatment system operated for multiple metals removal. Filtration as part of the technology basis is likewise justified because this technology removes metals non-preferentially.

The following toxic pollutants are excluded from limitation on the basis that they are effectively controlled by the limitations developed for cadmium, copper, lead, and zinc:

115. arsenic
116. asbestos
119. chromium
124. nickel
126. silver

EFFLUENT LIMITATIONS

The treatment effectiveness concentrations achievable by application of the BAT treatment technology are discussed in Section VII of this supplement. The treatment effectiveness concentrations (both one day maximum and monthly average values) are multiplied by the BAT normalized discharged flows summarized in Table X-3 (page 1624) to calculate the mass of pollutants allowed to be discharged per mass of product. The results of these calculations in milligrams of pollutant per kilogram of product represent the BAT effluent limitations and are presented in Table X-4 (page 1625) for each individual wastewater stream.

The regulatory tables which follow, (Tables X-4, XI-3 and XI-4) contain the limitations established for each regulated pollutant (indicated by *). The limitations which would have been established if the other pollutants found at treatable concentrations were regulated are also shown in these tables. This additional information may be used by the permit writer when establishing a permit regulating the discharge of wastewaters from this subcategory and other sources and which may contain pollutants present but not specifically regulated under this subcategory.

TABLE X-1

CURRENT RECYCLE PRACTICES WITHIN THE PRIMARY ZINC SUBCATEGORY

	Number of Plants with Wastewater	Number of Plants with Recycle	Range of Recycle Values (%)
Zinc Reduction Furnace	2	2	88 - 100
Leaching	3	3	NR - 100
Casting	1	0	-

NR - not reported in dcp

Table X-2

POLLUTANT REMOVAL ESTIMATES FOR PRIMARY ZINC DIRECT DISCHARGERS

POLLUTANT	TOTAL RAW WASTE (kg/yr)	OPTION B DISCHARGED (kg/yr)	OPTION B REMOVED (kg/yr)	OPTION C DISCHARGED (kg/yr)	OPTION C REMOVED (kg/yr)
Arsenic	6,081.6	270.5	637.7	180.3	5,901.3
Cadmium	205,336.6	169.7	205,166.8	26.0	205,310.6
Chromium	2,880.0	44.6	2,835.4	37.1	2,842.9
Lead	147,559.3	63.6	147,495.7	42.4	147,516.9
Nickel	4,216.4	392.5	3,823.9	116.7	4,099.7
Selenium	274.7	159.1	115.5	106.1	168.6
Copper	48,849.6	307.6	48,542.0	206.9	48,642.8
Zinc	744,719.4	689.5	744,029.9	122.0	744,597.4
TOTAL TOXIC METALS	1,159,917.7	2,097.2	1,152,647.0	837.5	1,159,080.2
Aluminum	2,369.5	1,188.1	1,181.4	790.3	1,579.2
Ammonia	421.5	421.5	0.0	421.5	0.0
Fluoride	47.3	47.3	0.0	47.3	0.0
Iron	242.8	217.5	25.3	148.5	94.3
TOTAL NONCONVENTIONALS	3,081.0	1,874.4	1,206.7	1,407.6	1,673.4
TSS	47,518.2	6,364.8	41,153.4	1,379.0	46,139.2
TOTAL CONVENTIONALS	47,518.2	6,364.8	41,153.4	1,379.0	46,139.2
TOTAL POLLUTANTS	1,210,516.9	10,336.4	1,195,007.1	3,624.1	1,206,892.8
FLOW (l/yr)		530,400,000		530,400,000	

NOTE: TOTAL TOXIC METALS = Arsenic + Cadmium + Chromium + Lead + Nickel + Selenium + Copper + Zinc
TOTAL NONCONVENTIONALS = Aluminum + Ammonia + Fluoride + Iron
TOTAL CONVENTIONALS = TSS
TOTAL POLLUTANTS = Total Toxic Metals + Total Nonconventionals + Total Conventionals

OPTION B = Lime Precipitation, Sedimentation, and In-process Flow Reduction
OPTION C = Option B, plus Sulfide Precipitation and Sedimentation, and Multimedia Filtration

Table X-3

BAT WASTEWATER DISCHARGE RATES FOR THE PRIMARY ZINC SUBCATEGORY

Wastewater Stream	BAT Normalized Discharge Rate l/kkg	BAT Normalized Discharge Rate gal/ton	Production Normalizing Parameter
Zinc Reduction Furnace Wet Air Pollution Control	1,668	400	Zinc reduced
Preleach Wastewater	901	216	Concentrate leached
Leaching Wet Air Pollution Control	0	0	Zinc processed through leaching
Electrolyte Bleed Wastewater	432	104	Cathode zinc produced
Cathode and Anode Wash Wastewater	751	180	Cathode zinc produced
Casting Wet Air Pollution Control	257	61.8	Zinc cast
Casting Contact Cooling	181	43.4	Zinc cast
Cadmium Plant Wastewater	6,171	1,480	Cadmium produced

TABLE X-4

BAT EFFLUENT LIMITATIONS FOR THE PRIMARY ZINC SUBCATEGORY

(a) Zinc Reduction Furnace Wet Air Pollution Control BAT

Pollutant or Pollutant Property	Maximum for Any One Day	Maximum for Monthly Average
Metric Units - mg/kg of zinc reduced English Units - lbs/million lbs of zinc reduced		
Arsenic	2.319	1.034
*Cadmium	0.334	0.134
Chromium	0.617	0.250
*Copper	2.135	1.018
*Lead	0.467	0.217
Nickel	0.917	0.617
Silver	0.484	0.200
*Zinc	1.702	0.701

*Regulated Pollutant

(b) Preleach of Zinc Concentrates BAT

Pollutant or Pollutant Property	Maximum for Any One Day	Maximum for Monthly Average
Metric Units - mg/kg of concentrate leached English Units - lbs/million lbs of concentrate leached		
Arsenic	1.252	0.559
*Cadmium	0.180	0.072
Chromium	0.333	0.135
*Copper	1.153	0.550
*Lead	0.252	0.117
Nickel	0.496	0.333
Silver	0.261	0.108
*Zinc	0.919	0.378

*Regulated Pollutant

TABLE X-4 (Continued)

BAT EFFLUENT LIMITATIONS FOR THE PRIMARY ZINC SUBCATEGORY

(c) Leaching Wet Air Pollution Control BAT

Pollutant or Pollutant Property	Maximum for Any One Day	Maximum for Monthly Average
Metric Units - mg/kg of zinc processed through leaching English Units - lbs/million lbs of zinc processed through leaching		
Arsenic	0.000	0.000
*Cadmium	0.000	0.000
Chromium	0.000	0.000
*Copper	0.000	0.000
*Lead	0.000	0.000
Nickel	0.000	0.000
Silver	0.000	0.000
*Zinc	0.000	0.000

*Regulated Pollutant

(d) Electrolyte Bleed Wastewater BAT

Pollutant or Pollutant Property	Maximum for Any One Day	Maximum for Monthly Average
Metric Units - mg/kg of cathode zinc produced English Units - lbs/million lbs of cathode zinc produced		
Arsenic	0.600	0.268
*Cadmium	0.086	0.035
Chromium	0.160	0.065
*Copper	0.553	0.264
*Lead	0.121	0.056
Nickel	0.238	0.160
Silver	0.125	0.052
*Zinc	0.441	0.182

*Regulated Pollutant

TABLE X-4 (Continued)

BAT EFFLUENT LIMITATIONS FOR THE PRIMARY ZINC SUBCATEGORY

(e) Cathode and Anode Wash Wastewater BAT

Pollutant or Pollutant Property	Maximum for Any One Day	Maximum for Monthly Average
Metric Units - mg/kg of cathode zinc produced English Units - lbs/million lbs of cathode zinc produced		
Arsenic	1.044	0.466
*Cadmium	0.150	0.060
Chromium	0.278	0.113
*Copper	0.961	0.458
*Lead	0.210	0.098
Nickel	0.413	0.278
Silver	0.218	0.090
*Zinc	0.766	0.315

*Regulated Pollutant

(f) Casting Wet Air Pollution Control BAT

Pollutant or Pollutant Property	Maximum for Any One Day	Maximum for Monthly Average
Metric Units - mg/kg of zinc cast English Units - lbs/million lbs of zinc cast		
Arsenic	0.357	0.159
*Cadmium	0.051	0.021
Chromium	0.095	0.039
*Copper	0.329	0.157
*Lead	0.072	0.033
Nickel	0.141	0.095
Silver	0.075	0.031
*Zinc	0.262	0.108

*Regulated Pollutant

TABLE X-4 (Continued)

BAT EFFLUENT LIMITATIONS FOR THE PRIMARY ZINC SUBCATEGORY

(g) Casting Contact Cooling BAT

Pollutant or Pollutant Property	Maximum for Any One Day	Maximum for Monthly Average
Metric Units - mg/kg of zinc cast English Units - lbs/million lbs of zinc cast		
Arsenic	0.252	0.112
*Cadmium	0.036	0.014
Chromium	0.067	0.027
*Copper	0.232	0.110
*Lead	0.051	0.024
Nickel	0.100	0.067
Silver	0.052	0.022
*Zinc	0.185	0.076

*Regulated Pollutant

(h) Cadmium Plant Wastewater BAT

Pollutant or Pollutant Property	Maximum for Any One Day	Maximum for Monthly Average
Metric Units - mg/kg of cadmium produced English Units - lbs/million lbs of cadmium produced		
Arsenic	8.578	3.826
*Cadmium	1.234	0.494
Chromium	2.283	0.926
*Copper	7.899	3.765
*Lead	1.728	0.802
Nickel	3.394	2.283
Silver	1.790	0.741
*Zinc	6.295	2.592

*Regulated Pollutant

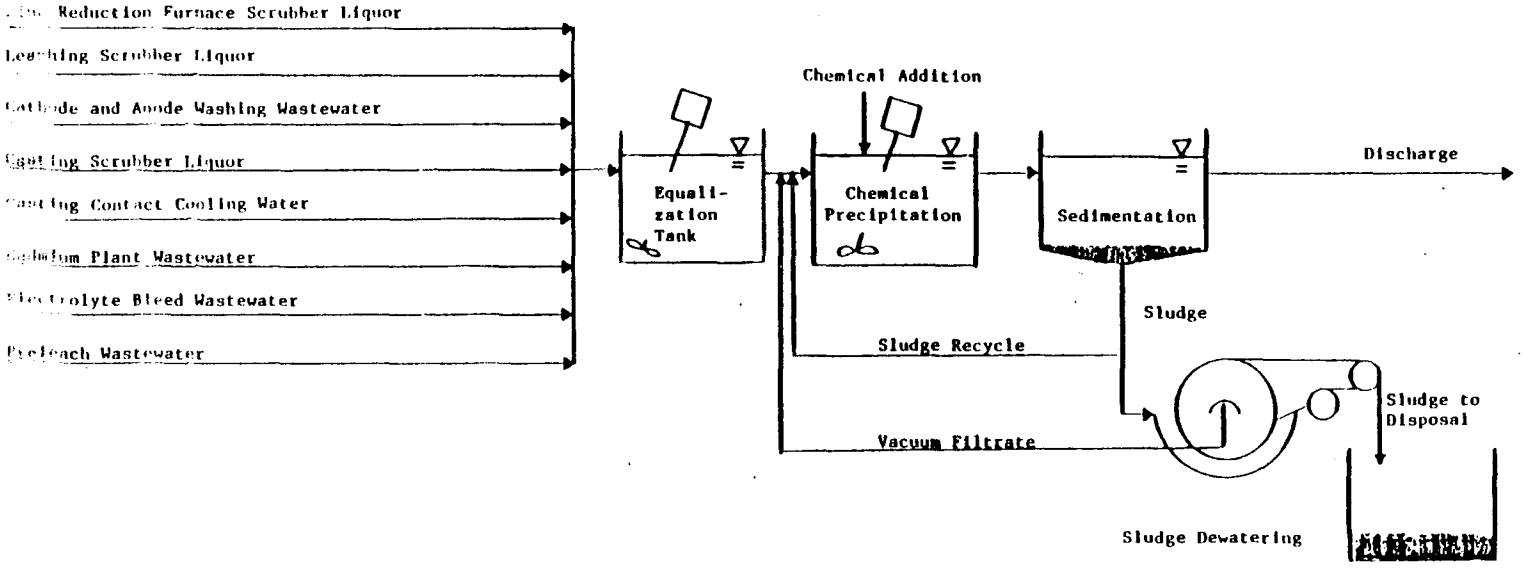

Figure X-1

BAT TREATMENT SCHEME OPTION A
PRIMARY ZINC SUBCATEGORY

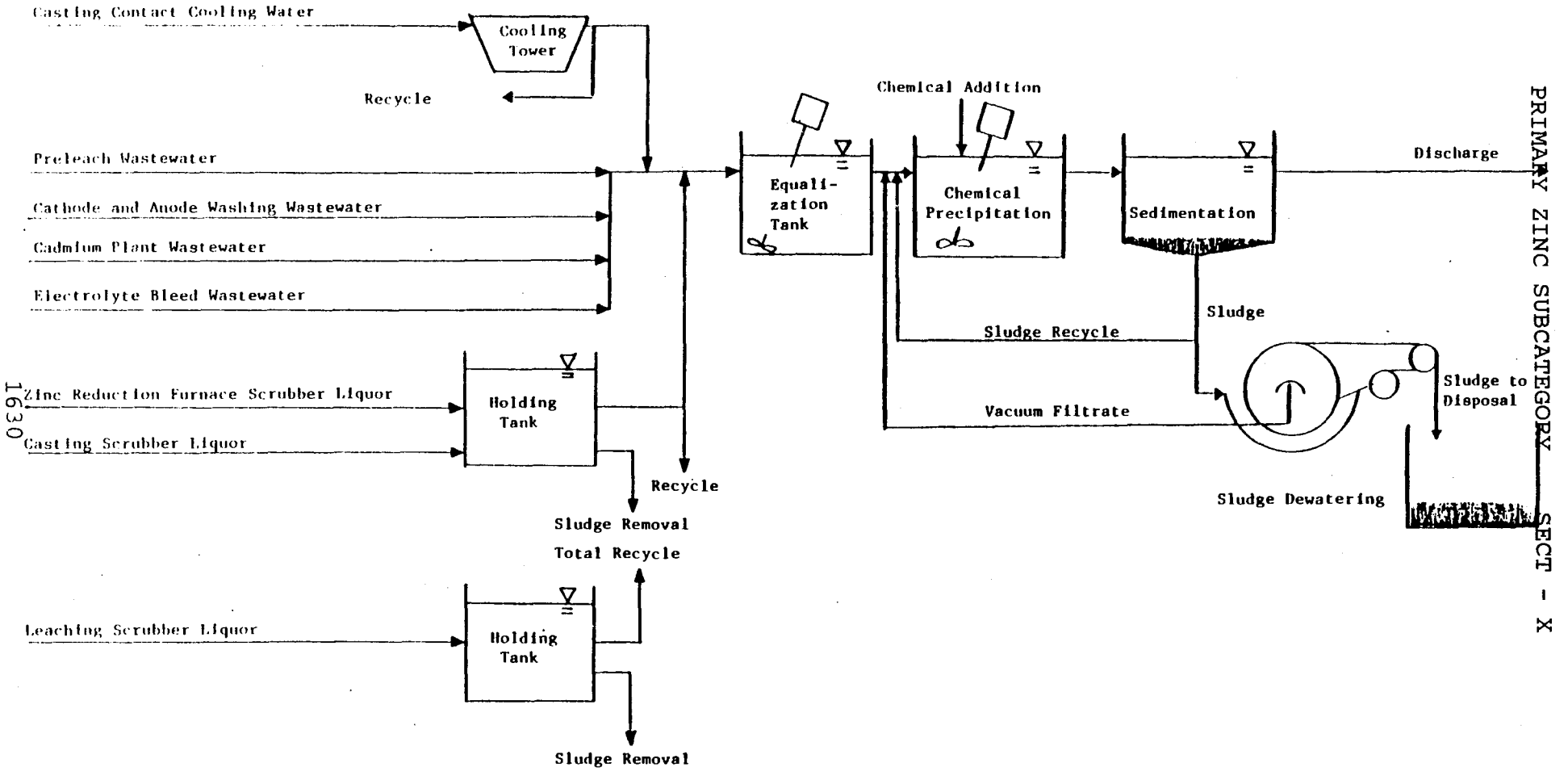

Figure X-2

BAT TREATMENT SCHEME OPTION B
PRIMARY ZINC SUBCATEGORY

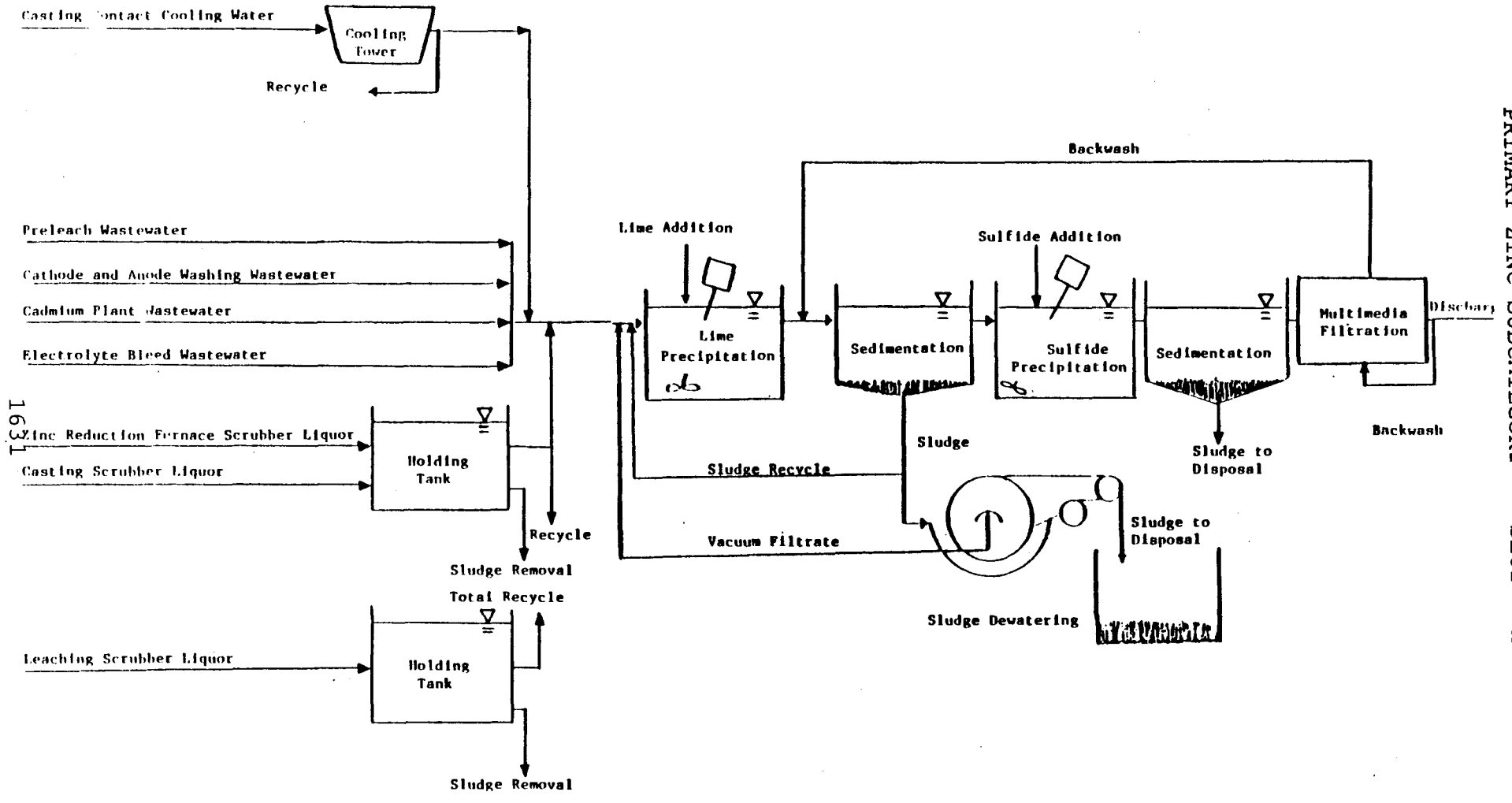

Figure X-3

BAT TREATMENT SCHEME OPTION C
PRIMARY ZINC SUBCATEGORY

Page Intentionally Blank

SECTION XI

NEW SOURCE PERFORMANCE STANDARDS

The basis for new source performance standards (NSPS) under Section 306 of the Act is the best available demonstrated technology (BDT). New plants have the opportunity to design the best and most efficient production processes and wastewater treatment technologies, without facing the added costs and restrictions encountered in retrofitting an existing plant. This section describes the technologies for treatment of wastewater from new sources, and presents mass discharge standards for regulated pollutants for NSPS based on the selected treatment technology.

TECHNICAL APPROACH TO BDT

All of the treatment technology options applicable to a new source were previously considered for the BAT options. For this reason, five options were considered for BDT, all identical to the BAT options discussed in Section X. The treatment technologies used for the five BDT options are:

OPTION A

- Chemical precipitation (lime) and sedimentation

OPTION B

- Chemical precipitation (lime) and sedimentation
- In-process flow reduction of scrubber liquor and casting contact cooling water

OPTION C

- Chemical precipitation (lime) and sedimentation
- In-process flow reduction of scrubber liquor and casting contact cooling water
- Sulfide precipitation and sedimentation
- Multimedia filtration

Partial or complete reuse and recycle of wastewater is an essential part of each option. Reuse and recycle can precede or follow end-of-pipe treatment. A more detailed discussion of these treatment options is presented in Section X.

BDT OPTION SELECTION

EPA is promulgating best available demonstrated technology for the primary zinc subcategory equal to BAT technology, which consists of in-process wastewater flow reduction, chemical precipitation and sedimentation, sulfide precipitation and

sedimentation, and multimedia filtration (Option C). Review of the subcategory indicates that no new demonstrated technologies exist that improve on BAT technology. Reverse osmosis is not demonstrated in this subcategory and is not clearly transferable to nonferrous metals manufacturing wastewater. The Agency also does not believe that new plants could achieve any additional flow reduction beyond that promulgated for BAT.

Dry scrubbing is not demonstrated for controlling emissions from zinc reduction furnaces, leaching and product casting. The nature of these emissions (acidic fumes, hot particulate matter) technically precludes the use of dry scrubbers. Therefore, we are including an allowance from this source at NSPS equivalent to that proposed for BAT. EPA does not believe that new plants could achieve any additional flow reduction beyond that proposed for BAT.

REGULATED POLLUTANT PARAMETERS

The Agency has no reason to believe that the pollutants that will be found in treatable concentrations in processes within new sources will be any different than with existing sources. Accordingly, pollutants and pollutant parameters selected for limitation under NSPS, in accordance with the rationale of Sections VI and X, are identical to those selected for BAT. The conventional pollutant parameters TSS and pH are also selected for limitation.

NEW SOURCE PERFORMANCE STANDARDS

The NSPS discharge flows are the same as the BAT discharge flows for all processes. These discharge flows are listed in Table XI-1 (page 1635). The mass of pollutant allowed to be discharged per mass of product is calculated by multiplying the achievable treatment concentration (mg/l) by the normalized wastewater discharge flow (l/kkg). New source performance standards, as determined from the above procedure, are shown in Table XI-2 (page 1636) for each waste stream. Since both the discharge flows and achievable treatment concentrations for new sources and BAT are identical, the NSPS are identical to the BAT mass limitations.

Table XI-1

NSPS WASTEWATER DISCHARGE RATES FOR THE PRIMARY ZINC SUBCATEGORY

Wastewater Stream	NSPS Normalized Discharge Rate 1/kkg	NSPS Normalized Discharge Rate gal/ton	Production Normalizing Parameter
Zinc Reduction Furnace Wet Air Pollution Control	1,668	400	Zinc reduced
Preleach Wastewater	901	216	Concentrate leached
Leaching Wet Air Pollution Control	0	0	Zinc processed through leaching
Electrolyte Bleed Wastewater	432	104	Cathode zinc produced
Cathode and Anode Wash Wastewater	751	180	Cathode zinc produced
Casting Wet Air Pollution Control	257	61.8	Zinc cast
Casting Contact Cooling	181	43.4	Zinc cast
Cadmium Plant Wastewater	6,171	1,480	Cadmium produced

TABLE XI-2

NSPS FOR THE PRIMARY ZINC SUBCATEGORY

(a) Zinc Reduction Furnace Wet Air Pollution Control NSPS

Pollutant or Pollutant Property	Maximum for Any One Day	Maximum for Monthly Average
Metric Units - mg/kg of zinc reduced English Units - lbs/million lbs of zinc reduced		
Arsenic	2.319	1.034
*Cadmium	0.334	0.134
Chromium	0.617	0.250
*Copper	2.135	1.018
*Lead	0.467	0.217
Nickel	0.917	0.617
Silver	0.484	0.200
*Zinc	1.702	0.701
*TSS	25.020	20.020
*pH	Within the range of 7.5 to 10.0 at all times	

*Regulated Pollutant

(b) Preleach of Zinc Concentrates NSPS

Pollutant or Pollutant Property	Maximum for Any One Day	Maximum for Monthly Average
Metric Units - mg/kg of concentrate leached English Units - lbs/million lbs of concentrate leached		
Arsenic	1.252	0.559
*Cadmium	0.180	0.072
Chromium	0.333	0.135
*Copper	1.153	0.550
*Lead	0.252	0.117
Nickel	0.496	0.333
Silver	0.261	0.108
*Zinc	0.919	0.378
*TSS	13.520	10.810
*pH	Within the range of 7.5 to 10.0 at all times	

*Regulated Pollutant

TABLE XI-2 (Continued)

NSPS FOR THE PRIMARY ZINC SUBCATEGORY

(c) Leaching Wet Air Pollution Control NSPS

Pollutant or Pollutant Property	Maximum for Any One Day	Maximum for Monthly Average
Metric Units - mg/kg of zinc processed through leaching English Units - lbs/million lbs of zinc processed through leaching		
Arsenic	0.000	0.000
*Cadmium	0.000	0.000
Chromium	0.000	0.000
*Copper	0.000	0.000
*Lead	0.000	0.000
Nickel	0.000	0.000
Silver	0.000	0.000
*Zinc	0.000	0.000
*TSS	0.000	0.000
*pH	Within the range of 7.5 to 10.0 at all times	

*Regulated Pollutant

(d) Electrolyte Bleed Wastewater NSPS

Pollutant or Pollutant Property	Maximum for Any One Day	Maximum for Monthly Average
Metric Units - mg/kg of cathode zinc produced English Units - lbs/million lbs of cathode zinc produced		
Arsenic	0.600	0.268
*Cadmium	0.086	0.035
Chromium	0.160	0.065
*Copper	0.553	0.264
*Lead	0.121	0.056
Nickel	0.238	0.160
Silver	0.125	0.052
*Zinc	0.441	0.182
*TSS	6.480	5.184
*pH	Within the range of 7.5 to 10.0 at all times	

*Regulated Pollutant

TABLE XI-2 (Continued)

NSPS FOR THE PRIMARY ZINC SUBCATEGORY

(e) Cathode and Anode Wash Wastewater NSPS

Pollutant or Pollutant Property	Maximum for Any One Day	Maximum for Monthly Average
Metric Units - mg/kg of cathode zinc produced English Units - lbs/million lbs of cathode zinc produced		
Arsenic	1.044	0.466
*Cadmium	0.150	0.060
Chromium	0.278	0.113
*Copper	0.961	0.458
*Lead	0.210	0.098
Nickel	0.413	0.278
Silver	0.218	0.090
*Zinc	0.766	0.315
*TSS	11.270	9.012
*pH	Within the range of 7.5 to 10.0 at all times	

*Regulated Pollutant

(f) Casting Wet Air Pollution Control NSPS

Pollutant or Pollutant Property	Maximum for Any One Day	Maximum for Monthly Average
Metric Units - mg/kg of zinc cast English Units - lbs/million lbs of zinc cast		
Arsenic	0.357	0.159
*Cadmium	0.051	0.021
Chromium	0.095	0.039
*Copper	0.329	0.157
*Lead	0.072	0.033
Nickel	0.141	0.095
Silver	0.075	0.031
*Zinc	0.262	0.108
*TSS	3.855	3.084
*pH	Within the range of 7.5 to 10.0 at all times	

*Regulated Pollutant

TABLE XI-2 (Continued)

NSPS FOR THE PRIMARY ZINC SUBCATEGORY

(g) Casting Contact Cooling NSPS

Pollutant or Pollutant Property	Maximum for Any One Day	Maximum for Monthly Average
Metric Units - mg/kg of zinc cast English Units - lbs/million lbs of zinc cast		
Arsenic	0.252	0.112
*Cadmium	0.036	0.014
Chromium	0.067	0.027
*Copper	0.232	0.110
*Lead	0.051	0.024
Nickel	0.100	0.067
Silver	0.052	0.022
*Zinc	0.185	0.076
*TSS	2.715	2.172
*pH	Within the range of 7.5 to 10.0 at all times	

*Regulated Pollutant

(h) Cadmium Plant Wastewater NSPS

Pollutant or Pollutant Property	Maximum for Any One Day	Maximum for Monthly Average
Metric Units - mg/kg of cadmium produced English Units - lbs/million lbs of cadmium produced		
Arsenic	8.578	3.826
*Cadmium	1.234	0.494
Chromium	2.283	0.926
*Copper	7.899	3.765
*Lead	1.728	0.802
Nickel	3.394	2.283
Silver	1.790	0.741
*Zinc	6.295	2.592
*TSS	92.570	74.050
*pH	Within the range of 7.5 to 10.0 at all times	

*Regulated Pollutant

Page Intentionally Blank

SECTION XII

PRETREATMENT STANDARDS

Section 307(b) of the Act requires EPA to promulgate pretreatment standards for existing sources (PSES), which must be achieved within three years of promulgation. PSES are designed to prevent the discharge of pollutants which pass through, interfere with, or are otherwise incompatible with the operation of publicly owned treatment works (POTW). The Clean Water Act of 1977 requires pretreatment for pollutants, such as toxic metals, that limit POTW sludge management alternatives. Section 307(c) of the Act requires EPA to promulgate pretreatment standards for new sources (PSNS) at the same time that it promulgates NSPS. New indirect discharge facilities, like new direct discharge facilities, have the opportunity to incorporate the best available demonstrated technologies, including process changes, in-plant controls, and end-of-pipe treatment technologies, and to use plant site selection to ensure adequate treatment system installation. Pretreatment standards are to be technology-based, analogous to the best available technology for removal of toxic pollutants.

This section describes the control and treatment technologies for pretreatment of process wastewaters from existing sources and new sources in the primary zinc subcategory. Pretreatment standards for regulated pollutants are presented based on the selected control and treatment technology.

TECHNICAL APPROACH TO PRETREATMENT

Before proposing pretreatment standards, the Agency examines whether the pollutants discharged by the industry pass through the POTW or interfere with the POTW operation or its chosen sludge disposal practices. In determining whether pollutants pass through a well-operated POTW, achieving secondary treatment, the Agency compares the percentage of a pollutant removed by POTW with the percentage removed by direct dischargers applying the best available technology economically achievable. A pollutant is deemed to pass through the POTW when the average percentage removed nationwide by well-operated POTW meeting secondary treatment requirements, is less than the percentage removed by direct dischargers complying with BAT effluent limitations guidelines for that pollutant. (See generally, 46 Fed. Reg. at 9415-16 (January 28, 1981).)

This definition of pass through satisfies two competing objectives set by Congress: (1) that standards for indirect dischargers be equivalent to standards for direct dischargers, while at the same time, (2) that the treatment capability and performance of the POTW be recognized and taken into account in regulating the discharge of pollutants from indirect dischargers.

The Agency compares percentage removal rather than the mass or concentration of pollutants discharged because the latter would not take into account the mass of pollutants discharged to the POTW from non-industrial sources nor the dilution of the pollutants in the POTW effluent to lower concentrations due to the addition of large amounts of non-industrial wastewater.

PRETREATMENT STANDARDS FOR EXISTING AND NEW SOURCES

Options for pretreatment of wastewaters are based on increasing the effectiveness of end-of-pipe treatment technologies. All in-plant changes and applicable end-of-pipe treatment processes have been discussed previously in Sections X and XI. The options for PSNS, therefore, are the same as the BAT options discussed in Section X.

A description of each option is presented in Section X, while a more detailed discussion, including pollutants controlled by each treatment process and expected effluent quality for each option, is presented in Section VII of Vol. I.

The treatment technology options for the PSES and PSNS options are:

OPTION A

- Chemical precipitation (lime) and sedimentation

OPTION B

- Chemical precipitation (lime) and sedimentation
- In-process flow reduction of scrubber liquor and casting contact cooling water

OPTION C

- Chemical precipitation (lime) and sedimentation
- In-process flow reduction of scrubber liquor and casting contact cooling water
- Sulfide precipitation and sedimentation
- Multimedia filtration

INDUSTRY COST AND POLLUTANT REMOVAL ESTIMATES

The industry cost and pollutant removal estimates of each treatment option were used to determine the most cost-effective option. The methodology applied in calculating pollutant removal estimates and plant compliance costs is discussed in Section X. Table XII-1 (page 1645) shows the estimated pollutant removals for indirect dischargers. Compliance costs are presented in Table VIII-2 (page 1646).

PSES OPTION SELECTION

EPA did not propose pretreatment standards for the primary zinc subcategory. Since that time, the Agency has learned that one primary zinc plant previously thought to be a zero discharger is actually an indirect discharger. Therefore, the Agency is promulgating PSES for the primary zinc subcategory based on the BAT model technology and flow allowances.

Implementation of the proposed PSES limitations would remove an estimated 685,000 kg/yr of toxic pollutants over estimated raw discharge. The final PSES effluent mass limitations will remove 210 kg/yr of toxic metals over the intermediate PSES option considered, which lacks filtration. Both options are economically achievable. The Agency believes the incremental removal justifies selection of filtration as part of PSES model technology. Filtration as an end-of-pipe treatment technology is currently demonstrated by one plant in the subcategory. Capital cost for achieving proposed PSES is $122,000 (March, 1982 dollars) and annual cost of $58,300 (March, 1982 dollars).

PSNS OPTION SELECTION

The technology basis for promulgated PSNS is identical to NSPS and BAT (Option C). The treatment scheme consists of in-process wastewater flow reduction, chemical precipitation and sedimentation, sulfide precipitation and sedimentation, and multimedia filtration. EPA knows of no demonstrated technology that provides more efficient pollutant removal than NSPS and BAT technology.

REGULATED POLLUTANT PARAMETERS

Pollutants and pollutant parameters selected for limitation under PSNS, in accordance with the rationale of Sections VI and X, are identical to those selected for BAT except for copper and lead. PSES and PSNS prevent the pass-through of cadmium and zinc, which are the regulated pollutants. The Agency has determined that copper and lead will not pass through a well-operated POTW and therefore they are not controlled.

PRETREATMENT STANDARDS

The PSES and PSNS regulatory discharge flows are identical to the BAT regulatory discharge flows for all processes. These flows are listed in Table XII-2 (page 1646). The mass of pollutant allowed to be discharged per mass of product is calculated by multiplying the achievable treatment concentration (mg/l) by the regulatory wastewater discharge flow (l/kkg). Pretreatment standards for existing and new sources, as determined from the above procedure, are shown in Tables XII-3 (page 1647) and XII-4 (page 1651) for each waste stream.

Mass-based standards are proposed for the primary zinc subcategory to ensure that the standards are achieved by means of pollutant removal rather than by dilution. They are particularly important since the standards are based upon flow reduction. Pollutant limitations associated with flow reduction cannot be measured any other way but as a reduction of mass discharged.

Table XII-1

POLLUTANT REMOVAL ESTIMATES FOR PRIMARY ZINC INDIRECT DISCHARGERS

POLLUTANT	TOTAL RAW WASTE (kg/yr)	OPTION B DISCHARGED (kg/yr)	OPTION B REMOVED (kg/yr)	OPTION C DISCHARGED (kg/yr)	OPTION C REMOVED (kg/yr)
Arsenic	2,143.0	60.5	637.7	40.4	2,102.7
Cadmium	3,574.1	38.0	3,536.1	5.8	3,568.3
Chromium	4.5	4.5	0.0	4.5	0.0
Lead	22,343.7	14.2	22,329.4	9.5	22,334.2
Nickel	1.9	1.9	0.0	1.9	0.0
Copper	2,017.6	68.8	1,948.8	46.3	1,971.3
Zinc	645,827.5	154.3	654,718.2	27.3	654,845.2
TOTAL TOXIC METALS	645,957.3	342.3	683,170.2	135.7	684,821.6
Aluminum	2,186.7	265.9	1,920.9	176.9	2,009.9
Ammonia	86.4	86.4	0.0	86.4	0.0
Fluoride	10.3	10.3	0.0	10.3	0.0
Iron	239.4	48.7	190.7	33.2	206.2
TOTAL NONCONVENTIONALS	2,522.8	411.2	2,111.6	306.7	2,216.0
TSS	351,160.2	1,424.4	349,735.8	308.6	350,851.6
TOTAL CONVENTIONALS	351,160.3	1,424.4	349,735.8	308.6	350,851.6
TOTAL POLLUTANTS	1,038,640.3	2,177.9	1,035,017.6	751.0	1,037,889.3
FLOW (l/yr)		118,700,000		118,700,000	

NOTE: TOTAL TOXIC METALS = Arsenic + Cadmium + Chromium + Lead + Nickel + Copper + Zinc
TOTAL NONCONVENTIONALS = Aluminum + Ammonia + Fluoride + Iron
TOTAL CONVENTIONALS = TSS
TOTAL POLLUTANTS = Total Toxic Metals + Total Nonconventionals + Total Conventionals

OPTION B = Lime Precipitation, Sedimentation, and In-process Flow Reduction
OPTION C = Option B, plus Sulfide Precipitation and Sedimentation, and Multimedia Filtration

Table XII-2

PSES AND PSNS WASTEWATER DISCHARGE RATES FOR THE PRIMARY ZINC SUBCATEGORY

Wastewater Stream	PSES and PSNS Normalized Discharge Rate l/kkg	PSES and PSNS Normalized Discharge Rate gal/ton	Production Normalizing Parameter
Zinc Reduction Furnace Wet Air Pollution Control	1,668	400	Zinc reduced
Preleach Wastewater	901	216	Concentrate leached
Leaching Wet Air Pollution Control	0	0	Zinc processed through leaching
Electrolyte Bleed Wastewater	432	104	Cathode zinc produced
Cathode and Anode Wash Wastewater	751	180	Cathode zinc produced
Casting Wet Air Pollution Control	257	61.8	Zinc cast
Casting Contact Cooling	181	43.4	Zinc cast
Cadmium Plant Wastewater	6,171	1,480	Cadmium produced

TABLE XII-3

PSES FOR THE PRIMARY ZINC SUBCATEGORY

(a) Zinc Reduction Furnace Wet Air Pollution Control PSES

Pollutant or Pollutant Property	Maximum for Any One Day	Maximum for Monthly Average
Metric Units - mg/kg of zinc reduced English Units - lbs/million lbs of zinc reduced		
Arsenic	2.319	1.034
*Cadmium	0.334	0.134
Chromium	0.617	0.250
*Copper	2.135	1.018
*Lead	0.467	0.217
Nickel	0.917	0.617
Silver	0.484	0.200
*Zinc	1.702	0.701

*Regulated Pollutant

(b) Preleach of Zinc Concentrates PSES

Pollutant or Pollutant Property	Maximum for Any One Day	Maximum for Monthly Average
Metric Units - mg/kg of concentrate leached English Units - lbs/million lbs of concentrate leached		
Arsenic	1.252	0.559
*Cadmium	0.180	0.072
Chromium	0.333	0.135
*Copper	1.153	0.550
*Lead	0.252	0.117
Nickel	0.496	0.333
Silver	0.261	0.108
*Zinc	0.919	0.378

*Regulated Pollutant

TABLE XII-3 (Continued)

PSES FOR THE PRIMARY ZINC SUBCATEGORY

(c) Leaching Wet Air Pollution Control PSES

Pollutant or Pollutant Property	Maximum for Any One Day	Maximum for Monthly Average
Metric Units - mg/kg of zinc processed through leaching English Units - lbs/million lbs of zinc processed through leaching		
Arsenic	0.000	0.000
*Cadmium	0.000	0.000
Chromium	0.000	0.000
*Copper	0.000	0.000
*Lead	0.000	0.000
Nickel	0.000	0.000
Silver	0.000	0.000
*Zinc	0.000	0.000

*Regulated Pollutant

(d) Electrolyte Bleed Wastewater PSES

Pollutant or Pollutant Property	Maximum for Any One Day	Maximum for Monthly Average
Metric Units - mg/kg of cathode zinc produced English Units - lbs/million lbs of cathode zinc produced		
Arsenic	0.600	0.268
*Cadmium	0.086	0.035
Chromium	0.160	0.065
*Copper	0.553	0.264
*Lead	0.121	0.056
Nickel	0.238	0.160
Silver	0.125	0.052
*Zinc	0.441	0.182

*Regulated Pollutant

TABLE XII-3 (Continued)

PSES FOR THE PRIMARY ZINC SUBCATEGORY

(e) Cathode and Anode Wash Wastewater PSES

Pollutant or Pollutant Property	Maximum for Any One Day	Maximum for Monthly Average
Metric Units - mg/kg of cathode zinc produced English Units - lbs/million lbs of cathode zinc produced		
Arsenic	1.044	0.466
*Cadmium	0.150	0.060
Chromium	0.278	0.113
*Copper	0.961	0.458
*Lead	0.210	0.098
Nickel	0.413	0.278
Silver	0.218	0.090
*Zinc	0.766	0.315

*Regulated Pollutant

(f) Casting Wet Air Pollution Control PSES

Pollutant or Pollutant Property	Maximum for Any One Day	Maximum for Monthly Average
Metric Units - mg/kg of zinc cast English Units - lbs/million lbs of zinc cast		
Arsenic	0.357	0.159
*Cadmium	0.051	0.021
Chromium	0.095	0.039
*Copper	0.329	0.157
*Lead	0.072	0.033
Nickel	0.141	0.095
Silver	0.075	0.031
*Zinc	0.262	0.108

*Regulated Pollutant

TABLE XII-3 (Continued)

PSES FOR THE PRIMARY ZINC SUBCATEGORY

(g) Casting Contact Cooling PSES

Pollutant or Pollutant Property	Maximum for Any One Day	Maximum for Monthly Average
Metric Units - mg/kg of zinc cast English Units - lbs/million lbs of zinc cast		
Arsenic	0.252	0.112
*Cadmium	0.036	0.014
Chromium	0.067	0.027
*Copper	0.232	0.110
*Lead	0.051	0.024
Nickel	0.100	0.067
Silver	0.052	0.022
*Zinc	0.185	0.076

*Regulated Pollutant

(h) Cadmium Plant Wastewater PSES

Pollutant or Pollutant Property	Maximum for Any One Day	Maximum for Monthly Average
Metric Units - mg/kg of cadmium produced English Units - lbs/million lbs of cadmium produced		
Arsenic	8.578	3.826
*Cadmium	1.234	0.494
Chromium	2.283	0.926
*Copper	7.899	3.765
*Lead	1.728	0.802
Nickel	3.394	2.283
Silver	1.790	0.741
*Zinc	6.295	2.592

*Regulated Pollutant

TABLE XII-4

PSNS FOR THE PRIMARY ZINC SUBCATEGORY

(a) Zinc Reduction Furnace Wet Air Pollution Control PSNS

Pollutant or Pollutant Property	Maximum for Any One Day	Maximum for Monthly Average
Metric Units - mg/kg of zinc reduced English Units - lbs/million lbs of zinc reduced		
Arsenic	2.319	1.034
*Cadmium	0.334	0.134
Chromium	0.617	0.250
*Copper	2.135	1.018
*Lead	0.467	0.217
Nickel	0.917	0.617
Silver	0.484	0.200
*Zinc	1.702	0.701

*Regulated Pollutant

(b) Preleach of Zinc Concentrates PSNS

Pollutant or Pollutant Property	Maximum for Any One Day	Maximum for Monthly Average
Metric Units - mg/kg of concentrate leached English Units - lbs/million lbs of concentrate leached		
Arsenic	1.252	0.559
*Cadmium	0.180	0.072
Chromium	0.333	0.135
*Copper	1.153	0.550
*Lead	0.252	0.117
Nickel	0.496	0.333
Silver	0.261	0.108
*Zinc	0.919	0.378

*Regulated Pollutant

TABLE XII-4 (Continued)

PSNS FOR THE PRIMARY ZINC SUBCATEGORY

(c) Leaching Wet Air Pollution Control PSNS

Pollutant or Pollutant Property	Maximum for Any One Day	Maximum for Monthly Average
Metric Units - mg/kg of zinc processed through leaching English Units - lbs/million lbs of zinc processed through leaching		
Arsenic	0.000	0.000
*Cadmium	0.000	0.000
Chromium	0.000	0.000
*Copper	0.000	0.000
*Lead	0.000	0.000
Nickel	0.000	0.000
Silver	0.000	0.000
*Zinc	0.000	0.000

*Regulated Pollutant

(d) Electrolyte Bleed Wastewater PSNS

Pollutant or Pollutant Property	Maximum for Any One Day	Maximum for Monthly Average
Metric Units - mg/kg of cathode zinc produced English Units - lbs/million lbs of cathode zinc produced		
Arsenic	0.600	0.268
*Cadmium	0.086	0.035
Chromium	0.160	0.065
*Copper	0.553	0.264
*Lead	0.121	0.056
Nickel	0.238	0.160
Silver	0.125	0.052
*Zinc	0.441	0.182

*Regulated Pollutant

TABLE XII-4 (Continued)

PSNS FOR THE PRIMARY ZINC SUBCATEGORY

(e) Cathode and Anode Wash Wastewater PSNS

Pollutant or Pollutant Property	Maximum for Any One Day	Maximum for Monthly Average
Metric Units - mg/kg of cathode zinc produced English Units - lbs/million lbs of cathode zinc produced		
Arsenic	1.044	0.466
*Cadmium	0.150	0.060
Chromium	0.278	0.113
*Copper	0.961	0.458
*Lead	0.210	0.098
Nickel	0.413	0.278
Silver	0.218	0.090
*Zinc	0.766	0.315

*Regulated Pollutant

(f) Casting Wet Air Pollution Control PSNS

Pollutant or Pollutant Property	Maximum for Any One Day	Maximum for Monthly Average
Metric Units - mg/kg of zinc cast English Units - lbs/million lbs of zinc cast		
Arsenic	0.357	0.159
*Cadmium	0.051	0.021
Chromium	0.095	0.039
*Copper	0.329	0.157
*Lead	0.072	0.033
Nickel	0.141	0.095
Silver	0.075	0.031
*Zinc	0.262	0.108

*Regulated Pollutant

TABLE XII-4 (Continued)

PSNS FOR THE PRIMARY ZINC SUBCATEGORY

(g) Casting Contact Cooling PSNS

Pollutant or Pollutant Property	Maximum for Any One Day	Maximum for Monthly Average
Metric Units - mg/kg of zinc cast English Units - lbs/million lbs of zinc cast		
Arsenic	0.252	0.112
*Cadmium	0.036	0.014
Chromium	0.067	0.027
*Copper	0.232	0.110
*Lead	0.051	0.024
Nickel	0.100	0.067
Silver	0.052	0.022
*Zinc	0.185	0.076

*Regulated Pollutant

(h) Cadmium Plant Wastewater PSNS

Pollutant or Pollutant Property	Maximum for Any One Day	Maximum for Monthly Average
Metric Units - mg/kg of cadmium produced English Units - lbs/million lbs of cadmium produced		
Arsenic	8.578	3.826
*Cadmium	1.234	0.494
Chromium	2.283	0.926
*Copper	7.899	3.765
*Lead	1.728	0.802
Nickel	3.394	2.283
Silver	1.790	0.741
*Zinc	6.295	2.592

*Regulated Pollutant

SECTION XIII

BEST CONVENTIONAL POLLUTANT CONTROL TECHNOLOGY

EPA is not promulgating best conventional pollutant control technology (BCT) for the primary zinc subcategory at this time.

NONFERROUS METALS MANUFACTURING POINT SOURCE CATEGORY

DEVELOPMENT DOCUMENT SUPPLEMENT

for the

Primary Lead Subcategory

William K. Reilly
Administrator

Rebecca Hanmer
Acting Assistant Administrator for Water

Martha Prothro, Director
Office of Water Regulations and Standards

Thomas P. O'Farrell, Director
Industrial Technology Division

Ernst P. Hall, P.E., Chief
Metals Industry Branch
and
Technical Project Officer

May 1989

U.S. Environmental Protection Agency
Office of Water
Office of Water Regulations and Standards
Industrial Technology Division
Washington, D. C. 20460

Page Intentionally Blank

TABLE OF CONTENTS

Section		Page
I	SUMMARY	1667
II	CONCLUSIONS	1671
III	SUBCATEGORY PROFILE	1679
	Description of Primary Lead Production	1697
	Raw Materials	1697
	Sintering	1697
	Blast Furnace Reduction	1698
	Drossing	1699
	Softening and Refining	1700
	Casting	1701
	Process Wastewater Sources	1701
	Other Wastewater Sources	1701
	Age, Production and Process Profile	1701
IV	SUBCATEGORIZATION	1707
	Factors Considered in Subdividing the Primary Lead Subcategory	1707
	Other Factors	1708
	Production Normalizing Parameters	1709
V	WATER USE AND WASTEWATER CHARACTERISTICS	1711
	Wastewater Sources, Discharge Rates, and Characteristics	1711
	Sinter Plant Materials Handling Wet Air Pollution Control	1714
	Blast Furnace Slag Granulation	1715
	Blast Furnace Wet Air Pollution Control	1715
	Dross Reverberatory Furnace Granulation Wastewater	1715
	Dross Reverberatory Furnace Wet Air Pollution Control	1715
	Zinc Fuming Furnace Wet Air Pollution Control	1716
	Hard Lead Refining Wet Air Pollution Control and Slag Granulation	1716
	Facility Washdown	1716
	Employee Handwash	1717
	Employee Respirator Wash	1717
	Laundry of Uniforms	1717

TABLE OF CONTENTS (Continued)

Section		Page
VI	SELECTION OF POLLUTANTS	1731
	Conventional and Nonconventional Pollutant Parameters	1732
	Conventional and Nonconventional Pollutant Parameters Selected	1732
	Toxic Pollutants	1732
	Toxic Pollutants Never Detected	1732
	Toxic Pollutants Never Found Above Their Analytical Quantification Concentration	1733
	Toxic Pollutants Present Below Concentrations Achievable by Treatment	1733
	Toxic Pollutants Detected in a Small Number of Sources	1734
	Toxic Pollutants Selected for Consideration in Establishing Limitations	1735
VII	CONTROL AND TREATMENT TECHNOLOGIES	1743
	Prior Regulations	1743
	Current Control and Treatment Practices	1744
	Sinter Plant Materials Handling Wet Air Pollution Control	1744
	Blast Furnace Wet Air Pollution Control	1745
	Blast Furnace Slag Granulation	1745
	Dross Reverberatory Slag Granulation Wastewater	1745
	Dross Reverberatory Furnace Wet Air Pollution Control	1746
	Zinc Fuming Furnace Wet Air Pollution Control	1746
	Hard Lead Refining Wet Air Pollution Control and Slag Granulation	1746
	Facility Washdown	1746
	Wastewater from Industrial Hygiene Compliance	1746
	Control and Treatment Options	1747
	Option A	1747
	Option B	1747
	Option C	1747
	Treatment Options Rejected	1748
	Option F	1748
VIII	COSTS, ENERGY, AND NONWATER QUALITY ASPECTS	1749
	Treatment Options Costed for Existing Sources	1749
	Option A	1749
	Option B	1749
	Option C	1750
	Cost Methodology	1750
	Nonwater Quality Aspects	1751
	Energy Requirements	1751
	Solid Waste	1752
	Air Pollution	1753

TABLE OF CONTENTS (Continued)

Section		Page
IX	BEST PRACTICABLE TECHNOLOGY CURRENTLY AVAILABLE	1755
	Technical Approach to BPT	1756
	Industry Cost and Pollutant Removal Estimates	1758
	BPT Option Selection	1758
	Wastewater Discharge Rates	1759
	Sinter Plant Materials Handling Wet Air Pollution Control	1760
	Blast Furnace Wet Air Pollution Control	1760
	Blast Furnace Slag Granulation	1760
	Dross Reverberatory Slag Granulation Wastewater	1760
	Dross Reverberatory Furnace Wet Air Pollution Control	1761
	Zinc Fuming Furnace Wet Air Pollution Control	1761
	Hard Lead Refining Wet Air Pollution Control	1761
	Hard Lead Refining Slag Granulation	1761
	Facility Washdown	1762
	Employee Handwash	1762
	Respirator Wash	1761
	Laundering of Uniforms	1762
	Regulated Pollutant Parameters	1762
	Stormwater and Precipitation Allowances	1763
	Effluent Limitations	1763
X	BEST AVAILABLE TECHNOLOGY ECONOMICALLY ACHIEVABLE	1771
	Technical Approach to BAT	1773
	Option A	1774
	Option B	1774
	Recycle of Water Used in Wet Air Pollution Control	1775
	Recycle or Reuse of Dross Reverberatory Furnace Granulation Wastewater	1775
	Option C	1775
	Industry Cost and Pollutant Removal Estimates	1776
	Pollutant Removal Estimates	1776
	Compliance Costs	1776
	BAT Option Selection	1777
	Wastewater Discharge Rates	1778
	Blast Furnace Slag Granulation	1778
	Zinc Fuming Furnace Wet Air Pollution Control	1779
	Dross Reverberatory Furnace Wet Air Pollution Control	1779
	Dross Reverberatory Slag Granulation Wastewater	1779
	Hard Lead Refining Wet Air Pollution Control	1780
	Regulated Pollutant Parameters	1780
	Stormwater and Precipitation Allowances	1781
	Effluent Limitations	1781

TABLE OF CONTENTS (Continued)

Section		Page
XI	NEW SOURCE PERFORMANCE STANDARDS	1793
	Technical Approach to BDT	1793
	BDT Option Selection	1793
	Regulated Pollutant Parameters	1794
	New Source Performance Standards	1794
XII	PRETREATMENT STANDARDS	1803
	Technical Approach to Pretreatment	1803
	Pretreatment Standards for Existing Sources and New Sources	1804
	Industry Cost and Pollutant Removal Estimates	1804
	Pretreatment Standards for Existing Sources	1805
	Pretreatment Standards for New Sources	1805
	Regulated Pollutant Parameters	1805
	Pretreatment Standards	1806
XIII	BEST CONVENTIONAL TECHNOLOGY	1823

LIST OF TABLES

Number		Page
III-1	INITIAL OPERATING YEAR SUMMARY OF PLANTS IN THE PRIMARY LEAD SUBCATEGORY BY DISCHARGE TYPE	1703
III-2	PRODUCTION RANGES FOR THE PRIMARY LEAD SUBCATEGORY	1703
III-3	SUMMARY OF PRIMARY LEAD SUBCATEGORY PROCESSES AND ASSOCIATED WASTE STREAMS	1704
V-1	WATER USE AND DISCHARGE RATES FOR SINTER PLANT MATERIALS HANDLING WET AIR POLLUTION CONTROL	1718
V-2	WATER USE AND DISCHARGE RATES FOR BLAST FURNACE SLAG GRANULATION	1718
V-3	WATER USE AND DISCHARGE RATES FOR DROSS REVERBERATORY FURNACE GRANULATION WASTEWATER	1719
V-4	WATER USE AND DISCHARGE RATES FOR DROSS REVERBERATORY FURNACE WET AIR POLLUTION CONTROL	1719
V-5	WATER USE AND DISCHARGE RATES FOR ZINC FUMING FURNACE WET AIR POLLUTION CONTROL	1720
V-6	WATER USE AND DISCHARGE RATES FOR HARD LEAD REFINING WET AIR POLLUTION CONTROL	1720
V-7	WATER USE AND DISCHARGE RATES FOR HARD LEAD REFINING SLAG GRANULATION	1721
V-8	PRIMARY LEAD SAMPLING DATA RAW SMELTING WASTEWATER	1722
V-9	PRIMARY LEAD SAMPLING DATA MISCELLANEOUS WASTEWATER	1724
V-10	PRIMARY LEAD SAMPLING DATA PARTIAL TREATMENT SAMPLES PLANT A	1726
VI-1	FREQUENCY OF OCCURRENCE OF TOXIC POLLUTANTS PRIMARY LEAD RAW WASTEWATER	1736
VI-1	TOXIC POLLUTANTS NEVER DETECTED	1740

LIST OF TABLES (Continued)

Number		Page
VIII-1	COST OF COMPLIANCE FOR THE PRIMARY LEAD SUBCATEGORY DIRECT DISCHARGERS	1754
VIII-2	COST OF COMPLIANCE FOR THE PRIMARY LEAD SUBCATEGORY INDIRECT DISCHARGERS	1754
IX-1	BPT WASTEWATER DISCHARGE RATES FOR THE PRIMARY LEAD SUBCATEGORY	1765
IX-2	BPT EFFLUENT LIMITATIONS FOR THE PRIMARY LEAD SUBCATEGORY	1766
X-1	POLLUTANT REMOVAL ESTIMATES FOR PRIMARY LEAD DIRECT DISCHARGERS	1782
X-2	BAT WASTEWATER DISCHARGE RATES FOR THE PRIMARY LEAD SUBCATEGORY	1783
X-3	BAT EFFLUENT LIMITATIONS FOR THE PRIMARY LEAD SUBCATEGORY	1784
XI-1	NSPS WASTEWATER DISCHARGE RATES FOR THE PRIMARY LEAD SUBCATEGORY	1796
XI-2	NSPS FOR THE PRIMARY LEAD SUBCATEGORY	1797
XII-1	POLLUTANT REMOVAL ESTIMATES FOR PRIMARY LEAD INDIRECT DISCHARGERS	1807
XII-2	PSES WASTEWATER DISCHARGE RATES FOR THE PRIMARY LEAD SUBCATEGORY	1808
XII-3	PSNS WASTEWATER DISCHARGE RATES FOR THE PRIMARY LEAD SUBCATEGORY	1809
XII-4	PSES FOR THE PRIMARY LEAD SUBCATEGORY	1810
XII-5	PSNS FOR THE PRIMARY LEAD SUBCATEGORY	1816

LIST OF FIGURES

Number		Page
III-1	PRIMARY LEAD MANUFACTURING PROCESS	1705
III-2	GEOGRAPHIC LOCATIONS OF PRIMARY LEAD SUBCATEGORY PLANTS	1706
V-1	SAMPLING SITES AT PRIMARY LEAD PLANT A	1728
V-2	SAMPLING SITES AT PRIMARY LEAD PLANT B	1729
V-3	SAMPLING SITES AT PRIMARY LEAD PLANT C	1730
IX-1	BPT TREATMENT SCHEME FOR PRIMARY LEAD SUBCATEGORY	1771
X-1	BAT TREATMENT SCHEME OPTION A	1788
X-2	BAT TREATMENT SCHEME OPTION B	1789
X-3	BAT TREATMENT SCHEME OPTION C	1790

THIS PAGE INTENTIONALLY LEFT BLANK

SECTION I

SUMMARY

On February 27, 1975, EPA promulgated technology-based effluent limitations for the primary lead subcategory of the Nonferrous Metals Manufacturing Point Source Category. Best practicable control technology currently available (BPT) and best available technology economically achievable (BAT) effluent limitations were established. Under these limitations, discharge of process wastewater pollutants into navigable waters was prohibited for plants located in historical areas of net evaporation with the following exceptions. Discharge without limitation was allowed for a volume of process wastewater equivalent to the volume of stormwater in excess of that attributable to a 10-year, 24-hour rainfall falling on the wastewater cooling impoundment. Discharge, subject to concentration-based limitations, was allowed for a volume equal to the net monthly precipitation on the wastewater cooling pond.

The best practicable control technology currently available was also established for plants located in historical areas of net precipitation. These limitations allowed a constant discharge of process wastewater and limited the quantities of total suspended solids, cadmium, lead, zinc, and the range of pH found in primary lead effluents.

EPA promulgated amendments to BPT and BAT, and establish BDT and pretreatment standards for this subcategory pursuant to the Clean Water Act amendments of 1977. This supplement provides a compilation and analysis of the background material used to develop these effluent limitations and standards.

The primary lead subcategory is comprised of six plants. Of the six plants, four discharge directly to a river, lake, or stream; two discharge to publicly owned treatment works (POTW); and none achieve zero discharge of process wastewater.

EPA first studied the primary lead subcategory to determine whether differences in raw materials, final products, manufacturing processes, equipment, age and size of plants, and water usage, required the development of separate effluent limitations and standards for different segments of the subcategory. This involved a detailed analysis of wastewater discharge and treated effluent characteristics, including (1) the sources and volume of water used, the processes used, and the sources of pollutants and wastewaters in the plant; and (2) the constituents of wastewaters, including toxic pollutants.

Several distinct control and treatment technologies (both in-plant and end-of-pipe) applicable to the primary lead subcategory were identified. The Agency analyzed both historical and newly generated data on the performance of these technologies,

including their nonwater quality environmental impacts (such as air quality impacts and solid waste generation) and energy requirements. EPA also studied various flow reduction techniques reported in the data collection portfolios (dcp) and plant visits.

Engineering costs were prepared for each of the control and treatment options considered for the subcategory. These costs were then used by the Agency to estimate the impact of implementing the various options on the subcategory. For each control and treatment option that the Agency found to be most effective and technically feasible in controlling the discharge of pollutants, the number of potential closures, number of employees affected, and impact on price were estimated. These results are reported in a separate document entitled Economic Impact Analysis of Effluent Limitations Guidelines and Standards for the Nonferrous Smelting and Refining Industry.

Based on consideration of the above factors, EPA identified various control and treatment technologies which formed the basis for BPT and selected control and treatment appropriate for each set of standards and limitations. The mass limitations and standards for BPT, BAT, NSPS, PSES, and PSNS are presented in Section II.

After examining the various treatment technologies, the Agency has identified BPT to represent the average of the best existing technology. Metals removal based on lime precipitation and sedimentation technology is the basis for the BPT limitations. To meet the BPT effluent limitations based on this technology, the primary lead subcategory is expected to incur an estimated capital cost of $0.260 million (1982 dollars) and an estimated annual cost of $0.116 million (1982 dollars).

For BAT, the Agency has built upon the BPT basis by adding in-process control technologies which include recycle of process water from air pollution control, dross reverberatory granulation, and facility washdown waste streams. Multimedia filtration followed by sulfide precipitation is added as an effluent polishing step to the end-of-pipe treatment scheme. Sulfide precipitation and sedimentation technology is added after lime precipitation and sedimentation to achieve the performance of lime, settle, and filter technology. To meet the BAT effluent limitations based on this technology, the primary lead subcategory is expected to incur an estimated capital cost of $0.215 million (1982 dollars) and an estimated annual cost of $0.118 million (1982 dollars).

The best demonstrated technology (BDT), which is the technical basis of NSPS, has been determined as zero discharge of process wastewater pollutants except for wastewater generated from those industrial hygiene streams provided an allowance at BAT. In selecting BDT, EPA recognizes that new plants have the opportunity to implement the best and most efficient manufacturing processes and treatment technology. As such, new

plants entering the primary lead subcategory will have the opportunity to install dry slag conditioning devices, or reuse and recycle process wastewater if a wet granulating system is installed.

The Agency is promulgating pretreatment standards for existing sources based on the same technology as BAT. The technology basis is in-process flow reduction, lime precipitation, sedimentation, sulfide precipitation, sedimentation, and multimedia filtration. To meet the PSES, the primary lead subcategory will incur an estimated capital cost of $0.038 million (1982 dollars) and an estimated annual cost of $0.007 million (1982 dollars). The technology basis for pretreatment standards for new sources (PSNS) is equivalent to the technology used for NSPS. The PSNS do not allow a discharge of process wastewater pollutants except for wastewater generated from industrial hygiene streams.

THIS PAGE INTENTIONALLY LEFT BLANK

SECTION II

CONCLUSIONS

EPA has divided the primary lead subcategory into 12 subdivisions or building blocks for the purpose of effluent limitations and standards. These building blocks are:

(a) Sinter plant materials handling wet air pollution control,
(b) Blast furnace wet air pollution control,
(c) Blast furnace slag granulation,
(d) Dross reverberatory slag granulation,
(e) Dross reverberatory furnace wet air pollution control,
(f) Zinc fuming furnace wet air pollution control,
(g) Hard lead refining slag granulation,
(h) Hard lead refining wet air pollution control,
(i) Facility washdown,
(j) Employee handwash,
(k) Respirator wash, and
(l) Laundering of uniforms.

A modified BPT is promulgated based on the performance achievable by the application of chemical precipitation, and sedimentation (lime and settle) technology. The following BPT effluent limitations are promulgated:

(a) Sinter Plant Materials Handling Wet Air Pollution Control BPT

Pollutant or Pollutant Property	Maximum for Any One Day	Maximum for Monthly Average
Metric Units - mg/kkg of sinter production English Units - lbs/billion lbs of sinter production		
Lead	594.000	270.000
Zinc	525.000	219.600
TSS	14,760.000	7,020.000
pH	Within the range of 7.0 to 10.0 at all times	

(b) Blast Furnace Wet Air Pollution Control BPT

Pollutant or Pollutant Property	Maximum for Any One Day	Maximum for Monthly Average
Metric Units - mg/kkg of blast furnace lead bullion produced English Units - lbs/billion lbs of blast furnace lead bullion produced		
Lead	0.000	0.000
Zinc	0.000	0.000
TSS	0.000	0.000
pH	Within the range of 7.0 to 10.0 at all times	

(c) Blast Furnace Slag Granulation BPT

Pollutant or Pollutant Property	Maximum for Any One Day	Maximum for Monthly Average
Metric Units - mg/kkg of blast furnace lead bullion produced English Units - lbs/billion lbs of blast furnace lead bullion produced		
Lead	6,155.000	2,798.000
Zinc	5,446.000	2,276.000
TSS	153,000.000	72,740.000
pH	Within the range of 7.0 to 10.0 at all times	

(d) Dross Reverberatory Slag Granulation BPT

Pollutant or Pollutant Property	Maximum for Any One Day	Maximum for Monthly Average
Metric Units - mg/kkg of slag, matte, or speiss granulated English Units - lbs/billion lbs of slag, matte, or speiss granulated		
Lead	9,499.000	4,318.000
Zinc	8,405.000	3,512.000
TSS	236,000.000	112,300.000
pH	Within the range of 7.0 to 10.0 at all times	

(e) Dross Reverberatory Furnace Wet Air Pollution Control BPT

Pollutant or Pollutant Property	Maximum for Any One Day	Maximum for Monthly Average
Metric Units - mg/kkg of dross reverberatory furnace production English Units - lbs/billion lbs of dross reverberatory furnace production		
Lead	15,920.000	7,235.000
Zinc	14,080.000	5,884.000
TSS	395,500.000	188,100.000
pH	Within the range of 7.0 to 10.0 at all times	

(f) Zinc Fuming Furnace Wet Air Pollution Control BPT

Pollutant or Pollutant Property	Maximum for Any One Day	Maximum for Monthly Average
Metric Units - mg/kkg of blast furnace lead bullion produced English Units - lbs/billion lbs of blast furnace lead bullion produced		
Lead	702.900	319.500
Zinc	622.000	259.900
TSS	17,470.000	8,307.000
pH	Within the range of 7.0 to 10.0 at all times	

(g) Hard Lead Refining Slag Granulation BPT

Pollutant or Pollutant Property	Maximum for Any One Day	Maximum for Monthly Average
Metric Units - mg/kkg of hard lead produced English Units - lbs/billion lbs of hard lead produced		
Lead	0.000	0.000
Zinc	0.000	0.000
TSS	0.000	0.000
pH	Within the range of 7.0 to 10.0 at all times	

(h) Hard Lead Refining Wet Air Pollution Control BPT

Pollutant or Pollutant Property	Maximum for Any One Day	Maximum for Monthly Average
Metric Units - mg/kkg of hard lead produced English Units - lbs/billion lbs of hard lead produced		
Lead	32,730.000	14,880.000
Zinc	28,960.000	12,100.000
TSS	813,300.000	386,800.000
pH	Within the range of 7.0 to 10.0 at all times	

(i) Facility Washdown BPT

Pollutant or Pollutant Property	Maximum for Any One Day	Maximum for Monthly Average
Metric Units - mg/kkg of lead bullion produced English Units - lbs/billion lbs of lead bullion produced		
Lead	0.000	0.000
Zinc	0.000	0.000
TSS	0.000	0.000
pH	Within the range of 7.0 to 10.0 at all times	

(j) Employee Handwash BPT

Pollutant or Pollutant Property	Maximum for Any One Day	Maximum for Monthly Average
Metric Units - mg/kkg of lead bullion produced English Units - lbs/billion lbs of lead bullion produced		
Lead	5.445	2.475
Zinc	4.818	2.013
TSS	135.300	64.350
pH	Within the range of 7.0 to 10.0 at all times	

(k) Respirator Wash BPT

Pollutant or Pollutant Property	Maximum for Any One Day	Maximum for Monthly Average
Metric Units - mg/kkg of lead bullion produced English Units - lbs/billion lbs of lead bullion produced		
Lead	8.745	3.975
Zinc	7.738	3.233
TSS	217.300	103.400
pH	Within the range of 7.0 to 10.0 at all times	

(1) Laundering of Uniforms BPT

Pollutant or Pollutant Property	Maximum for Any One Day	Maximum for Monthly Average
Metric Units - mg/kkg of lead bullion produced English Units - lbs/billion lbs of lead bullion produced		
Lead	25.580	11.630
Zinc	22.630	9.455
TSS	635.500	302.300
pH	Within the range of 7.0 to 10.0 at all times	

A modified BAT is promulgated based on the performance achievable by the application of lime precipitation, sedimentation, sulfide precipitation, sedimentation, and multimedia filtration technology, and in-process flow reduction control methods. The following BAT effluent limitations are promulgated for existing sources:

(a) Sinter Plant Materials Handling Wet Air Pollution Control BAT

Pollutant or Pollutant Property	Maximum for Any One Day	Maximum for Monthly Average
Metric Units - mg/kkg of sinter production English Units - lbs/billion lbs of sinter production		
Lead	100.800	46.800
Zinc	367.200	151.200

(b) Blast Furnace Wet Air Pollution Control BAT

Pollutant or Pollutant Property	Maximum for Any One Day	Maximum for Monthly Average
Metric Units - mg/kkg of blast furnace lead bullion produced English Units - lbs/billion lbs of blast furnace lead bullion produced		
Lead	0.000	0.000
Zinc	0.000	0.000

(c) Blast Furnace Slag Granulation BAT

Pollutant or Pollutant Property	Maximum for Any One Day	Maximum for Monthly Average
Metric Units - mg/kkg of blast furnace lead bullion produced English Units - lbs/billion lbs of blast furnace lead bullion produced		
Lead	0.000	0.000
Zinc	0.000	0.000

(d) Dross Reverberatory Furnace Slag Granulation BAT

Pollutant or Pollutant Property	Maximum for Any One Day	Maximum for Monthly Average
Metric Units - mg/kkg of slag, matte, or speiss granulated English Units - lbs/billion lbs of slag, matte, or speiss granulated		
Lead	1,612.000	748.400
Zinc	5,872.000	2,418.000

(e) Dross Reverberatory Furnace Wet Air Pollution Control BAT

Pollutant or Pollutant Property	Maximum for Any One Day	Maximum for Monthly Average
Metric Units - mg/kkg of dross reverberatory furnace production English Units - lbs/billion lbs of dross reverberatory furnace production		
Lead	0.000	0.000
Zinc	0.000	0.000

(f) Zinc Fuming Furnace Wet Air Pollution Control BAT

Pollutant or Pollutant Property	Maximum for Any One Day	Maximum for Monthly Average
Metric Units - mg/kkg of blast furnace lead bullion produced English Units - lbs/billion lbs of blast furnace lead bullion produced		
Lead	0.000	0.000
Zinc	0.000	0.000

(g) Hard Lead Refining Slag Granulation BAT

Pollutant or Pollutant Property	Maximum for Any One Day	Maximum for Monthly Average
Metric Units - mg/kkg of hard lead produced English Units - lbs/billion lbs of hard lead produced		
Lead	0.000	0.000
Zinc	0.000	0.000

(h) Hard Lead Refining Wet Air Pollution Control BAT

Pollutant or Pollutant Property	Maximum for Any One Day	Maximum for Monthly Average
Metric Units - mg/kkg of hard lead produced English Units - lbs/billion lbs of hard lead produced		
Lead	0.000	0.000
Zinc	0.000	0.000

(i) Facility Washdown BAT

Pollutant or Pollutant Property	Maximum for Any One Day	Maximum for Monthly Average
Metric Units - mg/kkg of lead bullion produced English Units - lbs/billion lbs of lead bullion produced		
Lead	0.000	0.000
Zinc	0.000	0.000

(j) Employee Handwash BAT

Pollutant or Pollutant Property	Maximum for Any One Day	Maximum for Monthly Average
Metric Units - mg/kkg of lead bullion produced English Units - lbs/billion lbs of lead bullion produced		
Lead	0.924	0.429
Zinc	3.366	1.386

(k) Respirator Wash BAT

Pollutant or Pollutant Property	Maximum for Any One Day	Maximum for Monthly Average
Metric Units - mg/kkg of lead bullion produced English Units - lbs/billion lbs of lead bullion produced		
Lead	1.484	0.689
Zinc	5.406	2.226

(l) Laundering of Uniforms BAT

Pollutant or Pollutant Property	Maximum for Any One Day	Maximum for Monthly Average
Metric Units - mg/kkg of lead bullion produced English Units - lbs/billion lbs of lead bullion produced		
Lead	4.340	2.015
Zinc	15.810	6.510

NSPS are promulgated based on the performance achievable by the application of lime precipitation, sedimentation, sulfide precipitation, sedimentation, and multimedia filtration technology, and in-process flow reduction control methods. The following effluent standards are promulgated for new sources:

(a) Sinter Plant Materials Handling Wet Air Pollution Control NSPS

Pollutant or Pollutant Property	Maximum for Any One Day	Maximum for Monthly Average
Metric Units - mg/kkg of sinter production English Units - lbs/billion lbs of sinter production		
Lead	0.000	0.000
Zinc	0.000	0.000
TSS	0.000	0.000
pH	Within the range of 7.0 to 10.0 at all times	

(b) Blast Furnace Wet Air Pollution Control NSPS

Pollutant or Pollutant Property	Maximum for Any One Day	Maximum for Monthly Average
Metric Units - mg/kkg of blast furnace lead bullion produced English Units - lbs/billion lbs of blast furnace lead bullion produced		
Lead	0.000	0.000
Zinc	0.000	0.000
TSS	0.000	0.000
pH	Within the range of 7.0 to 10.0 at all times	

(c) Blast Furnace Slag Granulation NSPS

Pollutant or Pollutant Property	Maximum for Any One Day	Maximum for Monthly Average
Metric Units - mg/kkg of blast furnace lead bullion produced English Units - lbs/billion lbs of blast furnace lead bullion produced		
Lead	0.000	0.000
Zinc	0.000	0.000
TSS	0.000	0.000
pH	Within the range of 7.0 to 10.0 at all times	

(d) Dross Reverberatory Slag Granulation NSPS

Pollutant or Pollutant Property	Maximum for Any One Day	Maximum for Monthly Average
Metric Units - mg/kkg of slag, matte, or speiss granulated English Units - lbs/billion lbs of slag, matte, or speiss granulated		
Lead	0.000	0.000
Zinc	0.000	0.000
TSS	0.000	0.000
pH	Within the range of 7.0 to 10.0 at all times	

(e) Dross Reverberatory Furnace Wet Air Pollution Control NSPS

Pollutant or Pollutant Property	Maximum for Any One Day	Maximum for Monthly Average
Metric Units - mg/kkg of dross reverberatory furnace production English Units - lbs/billion lbs of dross reverberatory furnace production		
Lead	0.000	0.000
Zinc	0.000	0.000
TSS	0.000	0.000
pH	Within the range of 7.0 to 10.0 at all times	

(f) Zinc Fuming Furnace Wet Air Pollution Control NSPS

Pollutant or Pollutant Property	Maximum for Any One Day	Maximum for Monthly Average
Metric Units - mg/kkg of blast furnace lead bullion produced English Units - lbs/billion lbs of blast furnace lead bullion produced		
Lead	0.000	0.000
Zinc	0.000	0.000
TSS	0.000	0.000
pH	Within the range of 7.0 to 10.0 at all times	

(g) Hard Lead Refining Slag Granulation NSPS

Pollutant or Pollutant Property	Maximum for Any One Day	Maximum for Monthly Average
Metric Units - mg/kkg of hard lead produced English Units - lbs/billion lbs of hard lead produced		
Lead	0.000	0.000
Zinc	0.000	0.000
TSS	0.000	0.000
pH	Within the range of 7.0 to 10.0 at all times	

(h) Hard Lead Refining Wet Air Pollution Control NSPS

Pollutant or Pollutant Property	Maximum for Any One Day	Maximum for Monthly Average
Metric Units - mg/kkg of hard lead produced English Units - lbs/billion lbs of hard lead produced		
Lead	0.000	0.000
Zinc	0.000	0.000
TSS	0.000	0.000
pH	Within the range of 7.0 to 10.0 at all times	

(i) Facility Washdown NSPS

Pollutant or Pollutant Property	Maximum for Any One Day	Maximum for Monthly Average
Metric Units - mg/kkg of lead bullion produced English Units - lbs/billion lbs of lead bullion produced		
Lead	0.000	0.000
Zinc	0.000	0.000
TSS	0.000	0.000
pH	Within the range of 7.0 to 10.0 at all times	

(j) Employee Handwash NSPS

Pollutant or Pollutant Property	Maximum for Any One Day	Maximum for Monthly Average
Metric Units - mg/kkg of lead bullion produced English Units - lbs/billion lbs of lead bullion produced		
Lead	0.924	0.429
Zinc	3.366	1.386
TSS	49.500	39.600
pH	Within the range of 7.0 to 10.0 at all times	

(k) Respirator Wash NSPS

Pollutant or Pollutant Property	Maximum for Any One Day	Maximum for Monthly Average
Metric Units - mg/kkg of lead bullion produced English Units - lbs/billion lbs of lead bullion produced		
Lead	1.484	0.689
Zinc	5.406	2.226
TSS	79.500	63.600
pH	Within the range of 7.0 to 10.0 at all times	

(l) Laundering of Uniforms NSPS

Pollutant or Pollutant Property	Maximum for Any One Day	Maximum for Monthly Average
Metric Units - mg/kkg of lead bullion produced English Units - lbs/billion lbs of lead bullion produced		
Lead	4.340	2.015
Zinc	15.810	6.510
TSS	232.500	186.000
pH	Within the range of 7.0 to 10.0 at all times	

PSES are promulgated based on the performance achievable by the application of lime precipitation, sedimentation, sulfide precipitation, sedimentation, and multimedia filtration technology, and in-process flow reduction control methods. The following pretreatment standards are promulgated for existing sources:

(a) Sinter Plant Materials Handling Wet Air Pollution Control PSES

Pollutant or Pollutant Property	Maximum for Any One Day	Maximum for Monthly Average
Metric Units - mg/kkg of sinter production English Units - lbs/billion lbs of sinter production		
Lead	100.800	46.800
Zinc	367.200	151.200

(b) Blast Furnace Wet Air Pollution Control PSES

Pollutant or Pollutant Property	Maximum for Any One Day	Maximum for Monthly Average
Metric Units - mg/kkg of blast furnace lead bullion produced English Units - lbs/billion lbs of blast furnace lead bullion produced		
Lead	0.000	0.000
Zinc	0.000	0.000

(c) Blast Furnace Slag Granulation PSES

Pollutant or Pollutant Property	Maximum for Any One Day	Maximum for Monthly Average
Metric Units - mg/kkg of blast furnace lead bullion produced English Units - lbs/billion lbs of blast furnace lead bullion produced		
Lead	0.000	0.000
Zinc	0.000	0.000

(d) Dross Reverberatory Slag Granulation PSES

Pollutant or Pollutant Property	Maximum for Any One Day	Maximum for Monthly Average
Metric Units - mg/kkg of slag, matte, or speiss granulated English Units - lbs/billion lbs of slag, matte, or speiss granulated		
Lead	1,612.000	748.400
Zinc	5,872.000	2,418.000

(e) Dross Reverberatory Furnace Wet Air Pollution Control PSES

Pollutant or Pollutant Property	Maximum for Any One Day	Maximum for Monthly Average
Metric Units - mg/kkg of dross reverberatory furnace production English Units - lbs/billion lbs of dross reverberatory furnace production		
Lead	0.000	0.000
Zinc	0.000	0.000

(f) Zinc Fuming Furnace Wet Air Pollution Control PSES

Pollutant or Pollutant Property	Maximum for Any One Day	Maximum for Monthly Average
Metric Units - mg/kkg of blast furnace lead bullion produced English Units - lbs/billion lbs of blast furnace lead bullion produced		
Lead	0.000	0.000
Zinc	0.000	0.000

(g) Hard Lead Refining Slag Granulation PSES

Pollutant or Pollutant Property	Maximum for Any One Day	Maximum for Monthly Average
Metric Units - mg/kkg of hard lead produced English Units - lbs/billion lbs of hard lead produced		
Lead	0.000	0.000
Zinc	0.000	0.000

(h) Hard Lead Refining Wet Air Pollution Control PSES

Pollutant or Pollutant Property	Maximum for Any One Day	Maximum for Monthly Average
Metric Units - mg/kkg of hard lead produced English Units - lbs/billion lbs of hard lead produced		
Lead	0.000	0.000
Zinc	0.000	0.000

(i) Facility Washdown PSES

Pollutant or Pollutant Property	Maximum for Any One Day	Maximum for Monthly Average
Metric Units - mg/kkg of lead bullion produced English Units - lbs/billion lbs of lead bullion produced		
Lead	0.000	0.000
Zinc	0.000	0.000

(j) Employee Handwash PSES

Pollutant or Pollutant Property	Maximum for Any One Day	Maximum for Monthly Average
Metric Units - mg/kkg of lead bullion produced English Units - lbs/billion lbs of lead bullion produced		
Lead	0.924	0.429
Zinc	3.366	1.386

(k) Respirator Wash PSES

Pollutant or Pollutant Property	Maximum for Any One Day	Maximum for Monthly Average
Metric Units - mg/kkg of lead bullion produced English Units - lbs/billion lbs of lead bullion produced		
Lead	1.484	0.689
Zinc	5.406	2.226

(1) Laundering of Uniforms PSES

Pollutant or Pollutant Property	Maximum for Any One Day	Maximum for Monthly Average
Metric Units - mg/kkg of lead bullion produced English Units - lbs/billion lbs of lead bullion produced		
Lead	4.340	2.015
Zinc	15.810	6.510

PSNS are promulgated based on the performance achievable by the application of lime precipitation, sedimentation, sulfide precipitation, sedimentation, and multimedia filtration technology, and in-process flow reduction control methods. The following pretreatment standards are promulgated for new sources:

(a) Sinter Plant Materials Handling Wet Air Pollution Control PSNS

Pollutant or Pollutant Property	Maximum for Any One Day	Maximum for Monthly Average
Metric Units - mg/kkg of sinter production English Units - lbs/billion lbs of sinter production		
Lead	0.000	0.000
Zinc	0.000	0.000

(b) Blast Furnace Wet Air Pollution Control PSNS

Pollutant or Pollutant Property	Maximum for Any One Day	Maximum for Monthly Average
Metric Units - mg/kkg of blast furnace lead bullion produced English Units - lbs/billion lbs of blast furnace lead bullion produced		
Lead	0.000	0.000
Zinc	0.000	0.000

(c) Blast Furnace Slag Granulation PSNS

Pollutant or Pollutant Property	Maximum for Any One Day	Maximum for Monthly Average
Metric Units - mg/kkg of blast furnace lead bullion produced English Units - lbs/billion lbs of blast furnace lead bullion produced		
Lead	0.000	0.000
Zinc	0.000	0.000

(d) Dross Reverberatory Slag Granulation PSNS

Pollutant or Pollutant Property	Maximum for Any One Day	Maximum for Monthly Average
Metric Units - mg/kkg of slag, matte, or speiss granulated English Units - lbs/billion lbs of slag, matte, or speiss granulated		
Lead	0.000	0.000
Zinc	0.000	0.000

(e) Dross Reverberatory Furnace Wet Air Pollution Control PSNS

Pollutant or Pollutant Property	Maximum for Any One Day	Maximum for Monthly Average
Metric Units - mg/kkg of dross reverberatory furnace production English Units - lbs/billion lbs of dross reverberatory furnace production		
Lead	0.000	0.000
Zinc	0.000	0.000

(f) Zinc Fuming Furnace Wet Air Pollution Control PSNS

Pollutant or Pollutant Property	Maximum for Any One Day	Maximum for Monthly Average
Metric Units - mg/kkg of blast furnace lead bullion produced English Units - lbs/billion lbs of blast furnace lead bullion produced		
Lead	0.000	0.000
Zinc	0.000	0.000

(g) Hard Lead Refining Slag Granulation PSNS

Pollutant or Pollutant Property	Maximum for Any One Day	Maximum for Monthly Average
Metric Units - mg/kkg of hard lead produced English Units - lbs/billion lbs of hard lead produced		
Lead	0.000	0.000
Zinc	0.000	0.000

(h) Hard Lead Refining Wet Air Pollution Control PSNS

Pollutant or Pollutant Property	Maximum for Any One Day	Maximum for Monthly Average
Metric Units - mg/kkg of hard lead produced English Units - lbs/billion lbs of hard lead produced		
Lead	0.000	0.000
Zinc	0.000	0.000

(i) Facility Washdown PSNS

Pollutant or Pollutant Property	Maximum for Any One Day	Maximum for Monthly Average
Metric Units - mg/kkg of lead bullion produced English Units - lbs/billion lbs of lead bullion produced		
Lead	0.000	0.000
Zinc	0.000	0.000

(j) Employee Handwash PSNS

Pollutant or Pollutant Property	Maximum for Any One Day	Maximum for Monthly Average
Metric Units - mg/kkg of lead bullion produced English Units - lbs/billion lbs of lead bullion produced		
Lead	0.924	0.429
Zinc	3.366	1.386

(k) Respirator Wash PSNS

Pollutant or Pollutant Property	Maximum for Any One Day	Maximum for Monthly Average
Metric Units - mg/kkg of lead bullion produced English Units - lbs/billion lbs of lead bullion produced		
Lead	1.484	0.689
Zinc	5.406	2.226

(l) Laundering of Uniforms PSNS

Pollutant or Pollutant Property	Maximum for Any One Day	Maximum for Monthly Average
Metric Units - mg/kkg of lead bullion produced English Units - lbs/billion lbs of lead bullion produced		
Lead	4.340	2.015
Zinc	15.810	6.510

SECTION III

SUBCATEGORY PROFILE

This section of the Primary Lead Supplement describes the raw materials and processes used in smelting and refining primary lead and presents a profile of the primary lead plants identified in this study. For a discussion of the purpose, authority, and methodology for this study and a general description of the nonferrous metals manufacturing category, refer to Section III of Vol. I.

DESCRIPTION OF PRIMARY LEAD PRODUCTION

Primary lead production can be divided into five distinct steps -- sintering, blast furnace reduction, drossing, softening and refining, and casting. With only a few exceptions, the pyrometallurgical processes used in the U.S. primary lead industry have changed little in the last 75 years. The primary lead production process is presented schematically in Figure III-1 (page 1705) and described below.

RAW MATERIALS

Galena (PbS), cerusite ($PbCO_3$), and anglesite ($PbSO_4$) are the principal mineral ores used in the production of primary lead. Most of these ores originate in southeastern Missouri, but Idaho and Utah also produce significant amounts. Missouri ore concentrates have a lead content exceeding 70 percent and few impurities; the combined zinc and copper content of these ores is less than 3 percent. Fewer refining steps are required for Missouri ores because of their high grade. Other domestic lead smelters process different domestic and imported ores. The ore concentrates used by these smelters vary, but generally contain less lead and more impurities than concentrates from Missouri.

SINTERING

The initial step in the production of primary lead is a smelting operation which consists of blending the ore concentrates with recycle products and fluxes. The blend is moistened, pelletized using ball drums, and fed to a traveling grate furnace or sintering machine.

The objectives of the sintering operation are not only to remove sulfur as SO_2 and SO_3 and to eliminate, by volatilization, much of the cadmium present in the ore concentrate, but, equally important, to produce "sinter" of suitable size distribution and strength for subsequent treatment in the blast furnace.

In the most common type of sintering operation, a layer of pellets is placed on a grate and ignited by overhead downdraft burners. Another layer of pellets is then laid upon the first

layer, and the traveling grate enters the updraft windbox section of the sintering machine. The applied updraft causes the bed of sinter to burn from the bottom up. In another sintering method, the air flows from above (downdraft system) and the burners are placed below the charge. Whichever system is used, the charge is sintered in the front half of the sintering machine, called the strong gas strand, while the rear half, the weak gas strand, is used to cool the sintered charge. Sulfur oxides, arsenic, antimony, and cadmium are volatized during this process. The highly concentrated SO_x stream emitted during the initial part of the sintering operation is usually sent to a sulfuric acid plant. Particulates entrained in the off-gases are removed from gas by a flue or baghouse or both. The collected particulate is then mixed with water in a pugmill and then recycled to the sintering machine.

In the next step, the sinter is passed through a sinter breaker at the end of the sintering machine, broken, and sized. Oversize particles are fed to the blast furnace, while undersize particles are crushed and water cooled before returning to the sinter feed operation. Sinter breaking produces significant amounts of dust that are collected and recycled to the sinter feed.

Two plants report using wet scrubbers to control fugitive lead emissions from transfer points, conveyers, and crushing operations associated with sintering. A separate subcategory, metallurgical acid plants, has been created to account for the control of by-product recovery from the acidic SO_x gas stream which sintering generates.

BLAST FURNACE REDUCTION

The blast furnace is the primary reduction unit of a lead smelter. By a combination of heat and reducing gases, it separates the constituents into two phases: molten metal and slag. The metals that are easily reduced, such as lead, copper, silver, gold, bismuth, antimony, and arsenic, become part of the metal phase; metals that are not easily reduced become part of the slag phase along with the nonmetallic elements. Blast furnaces are usually rectangular, water cooled, and charged from the top while air, sometimes enriched with oxygen, is introduced into the bottom by tuyeres. The charge consists of sinter, flux, and coke, and usually includes recycled slag and dust from other operations.

Two or three molten layers form in the blast furnace. The top layer of the melt is slag containing iron, calcium, and magnesium silicates; small quantities of arsenic and antimony; and variable amounts of lead (1.5 to 4 percent). Slags with economically recoverable zinc may be processed on-site by slag fuming for zinc recovery. In this process, the slag is heated with coal to high temperatures that oxidize zinc into particles which are then collected with dust-collecting equipment. Wet air pollution control methods may also be applied to these zinc fuming furnaces. Slag after zinc fuming, or slag which is discarded

without fuming, is usually granulated by impacting a stream of the molten slag with a high-pressure water jet. The granulated slag may be dewatered and either recycled as part of the charge materials to the sinter process or, depending on slag composition and plant facilities, totally discarded.

A middle layer, matte, may be formed in some cases. Matte is composed of copper and iron sulfides, along with precious metals. If significant quantities of arsenic are present in the charge, speiss is also formed. Matte and speiss are usually sent to copper smelters for further treatment.

The bottom layer, lead bullion, is retained and further refined. Lead bullion normally contains quantities of copper, arsenic, antimony, or bismuth. These impurities must be removed by further processing to produce an acceptable lead product. The lead bullion also may contain precious metals in quantities that are economically recoverable.

DROSSING

Drossing is the initial step in refining the molten lead bullion from the blast furnaces. The bullion is transferred to open-topped, gas heated drossing kettles. Agitation and oxidation is provided by submerged air lances or mechanical means. The molten lead is cooled to a temperature at which oxides of lead and the common impurities in lead, particularly copper, solidify but the lead remains liquid. Since lead has such a high specific gravity, the separated impurities float to the top of the metal bath and form a solid scum, or "dross," which is subsequently skimmed off. The liquid lead may be transferred to a second kettle, where a second cycle can be performed. Sulfur is sometimes added to the melt to enhance the removal of copper as black copper sulfide powder which also rises to the top of the kettle. By drossing, the copper content of the lead is reduced from as high as several tenths of a percent to as low as 0.005 percent.

The skimmed dross, which typically contains about 90 percent lead oxide, 2 percent copper, and 2 percent antimony, as well as gold, silver, arsenic, bismuth, indium, zinc, tellurium, nickel, selenium, and sulfur is charged to a by-product reverberatory furnace (i.e., dross reverb) to recover lead bullion and other marketable products. Sodium carbonate and coke breeze are also charged to the furnace as fluxes to facilitate matte and speiss formation. Matte and speiss separate into two layers beneath the top slag and are removed and sold to a copper smelter. Liquid lead is tapped from the bottom of the furnace and returned to the dross kettles. Slag is returned to the lead blast furnace. Wet air pollution control scrubbers may be used to control emissions from the dross reverberatory furnace. Additionally, wastewater may be generated by the granulation of slag, matte, and speiss.

SOFTENING AND REFINING

After drossing, the bullion is subjected to a "softening" step. This refining operation is performed to remove antimony by oxidation and produces a product of lower hardness and strength. In contrast, lead alloyed with antimony is commonly referred to as "hard lead" or antimonial lead.

Softening may be done in a reverberatory-type furnace or by an oxidative slagging procedure using a sodium hydroxide and sodium nitrate mixture as an oxidant. In the reverberatory furnace operation, air is introduced through pipes or lances into the melt to oxidize impurities and form a slag which is then skimmed from the melt. This oxidation-skimming step is repeated to remove a second slag. The two slags are treated for recovery of antimony, antimonial lead, and sodium arsenate. Sodium arsenate is usually discarded. Tin slag generated in this process is sent to a tin recovery operation.

There are two oxidative slagging techniques for antimony removal from lead bullion: the kettle process and the Harris process. In both processes, a sodium hydroxide and sodium nitrate mixture is added to the molten metal, and impurities are then removed by skimming. The slag is discarded in the kettle process, but sodium hydroxide is recovered hydrometallurgically from the slag in the Harris process. Other metals, such as arsenic, antimony, and tin, may also be recovered.

Arsenical and antimonial skims may be sent to a furnace and then to a refining kettle to produce antimonial lead. Coke, silica, and sodium carbonate are sometimes added to the furnace, as fluxes, and lead oxide may be added to the refining kettle. Wet air pollution control methods or granulation of furnace slag with water may also be practiced.

Final refining of softened lead bullion is undertaken to remove gold, silver, and bismuth. Gold and silver are removed by the Parke's process in which zinc is added to the molten bullion to form insoluble zinc-gold and zinc-silver compounds. These compounds are subsequently skimmed, and residual zinc is removed from the bullion by vacuum dezincing. Vacuum dezincing is performed in a separate cell which vaporizes and removes zinc from the melt under a vacuum.

The Betterton process is used to remove bismuth from lead. Calcium and magnesium are simultaneously added to molten lead to precipitate $CaMg_2Bi_2$ crystals which float to the surface and are skimmed. Antimony or organic agents are sometimes added to facilitate removal. Residual calcium and magnesium are removed by adding caustic soda to the bullion in a final refining kettle. A slag containing calcium, magnesium, and other trace impurities is removed from the refined bullion and recycled to the blast furnace.

CASTING

Refined lead, which now assays greater than 99.9 percent purity, is sent to a casting operation where it is cast into ingots or pigs. None of the plants in the primary lead subcategory reported using contact cooling water.

PROCESS WASTEWATER SOURCES

Although a variety of processes are involved in primary lead production, the significant wastewater sources that will be associated with the primary lead subcategory can be subdivided as follows:

1. Sinter plant materials handling wet air pollution control,
2. Blast furnace wet air pollution control,
3. Blast furnace slag granulation,
4. Zinc fuming furnace wet air pollution control,
5. Dross reverberatory furnace wet air pollution control,
6. Dross reverberatory furnace granulation wastewater,
7. Hard lead refining wet air pollution control, and
8. Hard lead refining slag granulation.

Although not related to any one specific operation, contaminated wastewater is generated due to industrial hygiene requirements. Wastewater associated with employee hand washing, laundering of uniforms, respirator wash, and facility washdown are all contaminated with lead.

OTHER WASTEWATER SOURCES

There are other waste streams associated with the primary lead subcategory. These waste streams include stormwater runoff, maintenance and cleanup water, and miscellaneous granulation water. These waste streams are not considered as a part of this rulemaking. EPA believes that the flows and pollutant loadings associated with these waste streams are too insignificant to warrant a discharge allowance and are best handled by the appropriate permit authority on a case-by-case basis under authority of Section 402 of the Clean Water Act.

AGE, PRODUCTION, AND PROCESS PROFILE

Figure III-2 (page 1706) shows the locations of the six primary lead plants operating in the United States. All six are located west of the Mississippi River with the greatest concentration near the rich lead ore deposits in Missouri.

Table III-1 (page 1703) illustrates the relative age and discharge status of the primary lead plants throughout the United States. Four plants were built prior to or during World War I, and the other two have been built in the last 15 years. Smelting, which includes sintering, blast furnace reduction, and drossing, is performed by five of the six plants. Two of these plants also soften, refine, and cast the lead. One plant performs only the last three refining steps.

From Table III-2 (page 1703) it can be seen that of the six facilities which produce primary lead, production is between 100,000 and 250,000 tons/yr. Mean production is about 150,000 tons/yr.

Table III-3 (page 1704) provides a summary of the number of plants generating wastewater for the waste streams associated with the various processes and the number of plants with the process.

TABLE III-1

INITIAL OPERATING YEAR SUMMARY OF PLANTS IN THE PRIMARY LEAD SUBCATEGORY BY DISCHARGE TYPE

Type of Plant	Initial Operating Year (Plant Age in Years) 1983-1967 (0-15)	1966-1947 (15-35)	1946-1927 (35-55)	1926-1907 (55-75)	1906-1883 (75-100)	Total
Direct	2	0	0	1	1	4
Indirect	0	0	0	0	2	2
Zero	0	0	0	0	0	0
Total	2	0	0	1	3	6

TABLE III-2

PRODUCTION RANGES FOR THE PRIMARY LEAD SUBCATEGORY

Production Ranges for 1976 (Tons/Year)a	Number of Plants
50000 - 100000	1
100001 - 200000	2
200001 - 250000	3
Total	6

(a) - Based on production from blast furnace.

Table III-3

SUMMARY OF PRIMARY LEAD SUBCATEGORY PROCESSES AND ASSOCIATED WASTE STREAMS

Waste Stream	Number of Plants With Process	Number of Plants Generating Wastewater[a]
Sinter Plant Materials Handling	5	-
o Air Pollution Control	2	2
Blast Furnace	5	-
o Slag Granulation	3	3
o Air Pollution Control	5	0
Zinc Fuming Furnace	2	-
o Air Pollution Control	2	0[b]
Dross Reverberatory Furnace	4	-
o Slag Granulation	2	2
o Air Pollution Control	4	0[b]
Hard Lead Refining	1	-
o Slag Granulation	0[b]	0
o Air Pollution Control	0[b]	0

[a] Through reuse or evaporation practices, a plant may "generate" a wastewater from a particular process but not discharge it.

[b] At proposal one plant generated wastewater from this process. The plant has since closed.

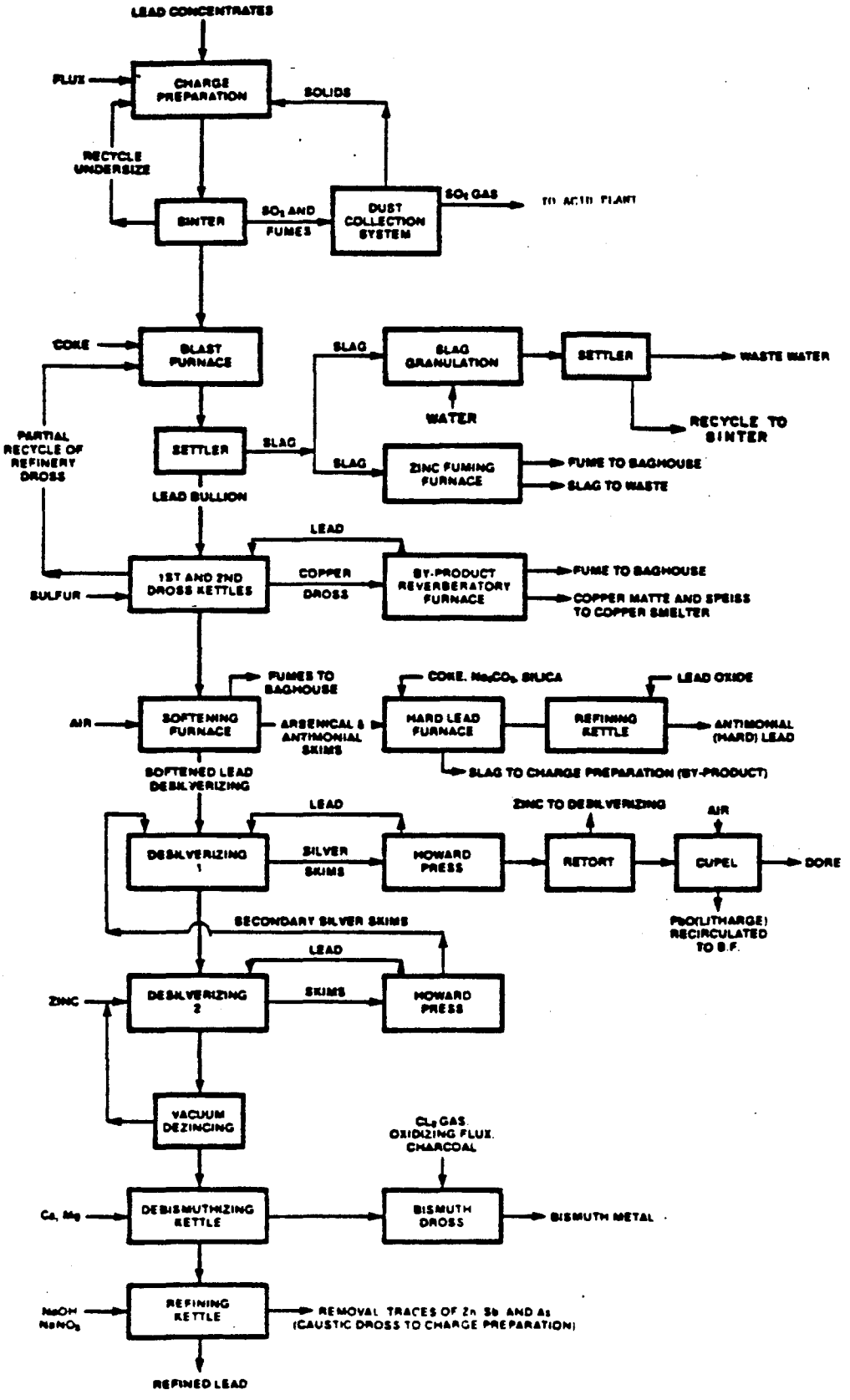

Figure III-1

PRIMARY LEAD MANUFACTURING PROCESS

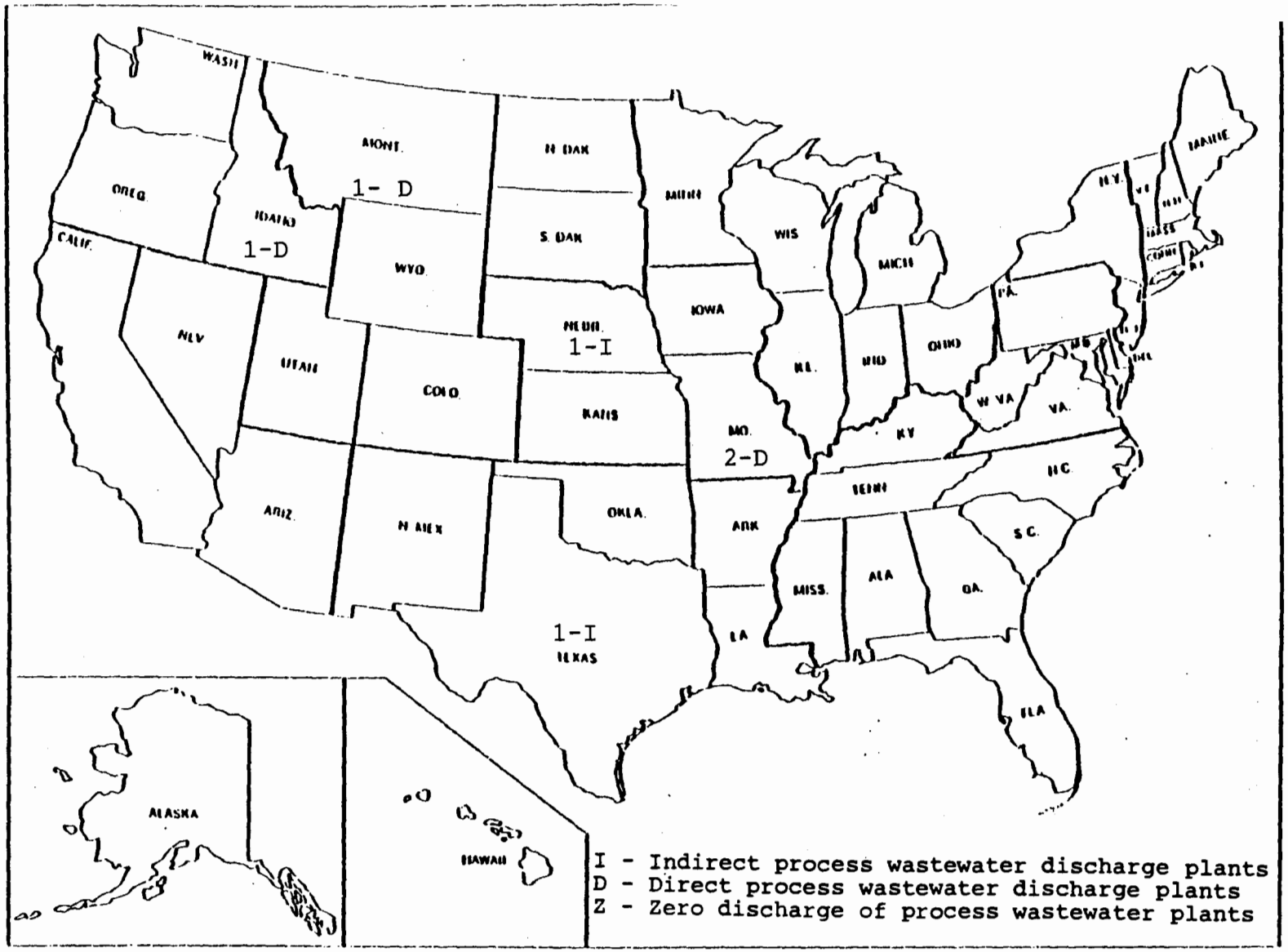

Figure III-2

GEOGRAPHIC LOCATIONS OF PRIMARY LEAD SUBCATEGORY PLANTS

SECTION IV

SUBCATEGORIZATION

This section summarizes the factors considered during the designation of the primary lead subcategory and its related subdivisions. The production of lead is distinguished from that of other nonferrous metals because the type of metal product accounts for differences in production processes, raw materials, and many other characteristics that are unique to the production of specific nonferrous metals. Lead is produced from both primary and secondary materials. Since the extraction processes and waste generation are dissimilar, lead production is divided into primary and secondary lead subcategories on the basis of raw materials.

FACTORS CONSIDERED IN SUBDIVIDING THE PRIMARY LEAD SUBCATEGORY

Because different production processes generate dissimilar wastewaters and the combination of production processes utilized varies from plant to plant within the subcategory, effluent limitations and standards are developed for each specific wastewater source or building block. The limitations and standards will be based on specific flow allowances for the following building blocks.

1. Sinter plant materials handling wet air pollution control,
2. Blast furnace wet air pollution control,
3. Blast furnace slag granulation,
4. Dross reverberatory furnace granulation wastewater,
5. Dross reverberatory furnace wet air pollution control,
6. Zinc fuming furnace wet air pollution control,
7. Hard lead refining slag granulation,
8. Hard lead refining wet air pollution control,
9. Facility washdown,
10. Employee hand wash,
11. Respirator wash, and
12. Laundering of uniforms.

These subdivisions follow directly from differences between the processing steps of primary lead production. Blast furnace reduction, drossing, and refining each have various steps which may generate wastewaters.

Sinter plant materials handling wet air pollution control is a result of wet scrubbers used in the ventilating system to control fugitive emissions emitted during the transportation of concentrate prior to sintering. A separate subdivision has been created for this waste stream because its operation is independent of the blast furnace area.

Blast furnace reduction of sinter into lead bullion establishes a need for the next three subdivisions -- blast furnace slag granulation, blast furnace wet air pollution control, and zinc fuming furnace wet air pollution control. Slag from the blast furnace, or from a zinc fuming furnace, is granulated by impacting a stream of molten slag with a high pressure water jet. The water from this process may be recycled or discharged. Wet air pollution control devices may be used to control particulate and volatile emissions from the blast furnace and from a high temperature furnace used to oxidize and "fume" recoverable zinc from a blast furnace slag. Three separate subdivisions are necessary because some plants do not use all these processes.

The fifth and sixth subdivisions result from differences in the drossing practices at plants. Reverberatory furnaces, which are used to separate impurities from the skimmed dross from the drossing kettles, may require wet air pollution control devices. Additionally, if the copper rich matte and speiss are recovered for resale, water may be used to granulate the matte and speiss layers in much the same way as slag from blast furnace reduction is granulated. Creation of these two subdivisions is necessary to account for the presence or absence of these wastewater sources.

The rationale for creation of subdivisions seven and eight is based on a potential wastewater source in the softening and refining step. Wet air pollution control methods may be used to reduce particulate emissions from "hard lead" furnaces, while slag from the "hard lead" furnaces may be granulated with water. Subdivision is necessary to account for the actual presence or absence of each source.

Subdivisions for the final four waste streams have been created to account for wastewater generated due to industrial hygiene requirements. A subdivision is created for each source because respirators and uniforms may be cleaned off-site or dry vacuuming methods may be used instead of washdown waters. Separate allowances for each source will provide the permit or control authority with the flexibility to provide only those allowances that are appropriate for operations conducted on-site.

OTHER FACTORS

The other factors considered in this evaluation either support the establishment of the 12 subdivisions or were shown to be inappropriate bases for subdivision. Air pollution control methods, treatment costs, and total energy requirements are functions of the selected subcategorization factors -- metal product, raw materials, and production processes. As discussed in Section IV of Vol. I, certain other factors, such as plant age, plant size, and the number of employees, were also evaluated and determined to be inappropriate for use as bases for subdivision of nonferrous metal subcategory.

PRODUCTION NORMALIZING PARAMETERS

As discussed previously, the effluent limitations and standards developed in this document establish mass limitations on the discharge of specific pollutant parameters. To allow these regulations to be applied to plants with various production capacities, the mass of pollutant discharged must be related to a unit of production. This factor is known as the production normalizing parameter (PNP). The Agency received no comments on the proposed effluent limitations questioning the selection of production normalizing parameters. Therefore, the Agency is not changing the PNP for any waste stream. The PNP's for the 12 subdivisions or building blocks are as follows:

	Building Block	PNP
1.	Sinter plant materials handling wet air pollution control	kkg of sinter production
2.	Blast furnace wet air pollution control	kkg of blast furnace lead bullion produced
3.	Blast furnace slag granulation	kkg of blast furnace lead bullion produced
4.	Dross reverberatory furnace granulation wastewater	kkg of slag, matte, or speiss granulated
5.	Dross reverberatory furnace wet air pollution control	kkg of dross reverberatory furnace production
6.	Zinc fuming furnace wet air pollution control	kkg of blast furnace lead bullion produced
7.	Hard lead refining slag granulation	kkg of hard lead produced
8.	Hard lead refining wet air pollution control	kkg of hard lead produced
9.	Facility washdown	kkg of lead bullion produced
10.	Employee hand wash	kkg of lead bullion produced
11.	Respirator wash	kkg of lead bullion produced
12.	Laundering of uniforms	kkg of lead bullion produced

THIS PAGE INTENTIONALLY LEFT BLANK

SECTION V

WASTE USE AND WASTEWATER CHARACTERISTICS

This section describes the characteristics of wastewater associated with the primary lead subcategory. Data used to quantify wastewater flow and pollutant concentrations are presented, summarized, and discussed. The contribution of specific production processes to the overall wastewater discharge from primary lead plants is identified whenever possible.

Two principal data sources were used in the development of effluent limitations and standards for this subcategory: data collection portfolios and field sampling results. Data collection portfolios contain information regarding wastewater flows and production levels. Data gathered through comments on the proposed mass limitations and specific data requests to evaluate these comments are also principal data sources.

In order to quantify the pollutant discharge from primary lead plants, a field sampling program was conducted. A complete list of the pollutants considered and a summary of the techniques used in sampling and laboratory analyses are included in Section V of the General Development Document. Wastewater samples were collected in two phases: screening and verification. The first phase, screen sampling, was to identify which toxic pollutants were present in the wastewaters from production of the various metals. Screening samples were analyzed for 125 of the 126 toxic pollutants and other pollutants deemed appropriate. (Because the analytical standard for TCDD was judged to be too hazardous to be made generally available, samples were never analyzed for this pollutant. There is no reason to expect that TCDD would be present in primary lead wastewater.) A total of 10 plants were selected for screen sampling in the nonferrous metals manufacturing category. In general, the samples were analyzed for three classes of pollutants: toxic organic pollutants, toxic metal pollutants, and criteria pollutants (which includes both conventional and nonconventional pollutants).

As described in Section IV of this supplement, the primary lead subcategory has been segmented into 12 building blocks, so that the promulgated regulation contains mass discharge limitations and standards for 12 process wastewaters. Differences in the wastewater characteristics associated with these building blocks are to be expected. For this reason, wastewater streams corresponding to each segment are addressed separately in the discussions that follow.

WASTEWATER SOURCES, DISCHARGE RATES, AND CHARACTERISTICS

The wastewater data presented in this section were evaluated in light of production process information compiled during this study. As a result, it was possible to identify the principal

wastewater sources in the primary lead subcategory. These include:

1. Sinter plant materials handling wet air pollution control,
2. Blast furnace wet air pollution control,
3. Blast furnace slag granulation,
4. Dross reverberatory furnace granulation wastewater,
5. Dross reverberatory furnace wet air pollution control,
6. Zinc fuming furnace wet air pollution control,
7. Hard lead refining slag granulation,
8. Hard lead refining wet air pollution control,
9. Facility washdown,
10. Employee hand wash,
11. Respirator wash, and
12. Laundering of uniforms.

Data supplied by data collection portfolio responses were evaluated, and two flow-to-production ratios were calculated for each stream. The two ratios, water use and wastewater discharge flow, are differentiated by the flow value used in calculation. Water use is defined as the volume of water required for a given process per mass of lead product and is therefore based on the sum of recycle and make-up flows to a given process. Wastewater flow is used in calculating the production normalized flow -- the volume of wastewater discharged from a given process to further treatment, disposal, or discharge per mass of lead produced. Differences between the water use and wastewater flows associated with a given stream result from recycle, evaporation, and carry-over on the product. The production values in calculation correspond to the production normalizing parameter, PNP, assigned to each stream, as outlined in Section IV. The production normalized flows were compiled by stream type. Where appropriate, an attempt was made to identify factors that could account for variations in water use. This information is summarized in this section. A similar analysis of factors affecting the wastewater values is presented in Sections X, XI, and XII, where representative BAT, BDT, and pretreatment discharge flows are selected for use in calculating the effluent limitations and standards. As an example, blast furnace slag granulation wastewater flow is related to blast furnace lead bullion production. As such, the discharge rate is expressed in liters of blast furnace slag granulation wastewater per metric ton of blast furnace lead bullion production (gallons of blast furnace slag granulation wastewater per ton of blast furnace lead bullion production).

Since the data collection portfolios have been collected, the Agency has learned that one primary lead facility has shut down. Flow and production data from this plant are still presented in this section and in the remainder of the document. Analytical data gathered at this plant are also presented. Although the plant is closed, flow and production data from the plant are an integral part of the flow components for BPT and BAT effluent mass limitations. Therefore, it is necessary to present this

information so that BPT and BAT limitations are documented. EPA believes that the data from this plant provide useful measures of the relationship between production and discharge. In light of this conclusion, (and indications that the plant closure may not be permanent), the Agency is using these data in its consideration of BPT and BAT performance.

In order to quantify the concentrations of pollutants present in wastewater from primary lead plants, wastewater samples were collected at three of the seven plants. Diagrams indicating the sampling sites and contributing production processes are shown in Figures V-1 through V-3 (pages 1728 - 1730).

The sampling data for the primary lead subcategory are presented in Tables V-8 through V-10 (pages 1722 - 1726). The stream codes displayed in Tables V-8 through V-10 may be used to identify the location of each of the samples on process flow diagrams in Figures V-1 through V-3. Where no data are listed for a specific day of sampling, the wastewater samples for the stream were not collected. If the analysis did not detect a pollutant in a waste stream, the pollutant was omitted from the table.

The data tables include some samples measured at concentrations considered not quantifiable. The base-neutral extractable, acid extractable, and volatile organics are generally considered not quantifiable at concentrations equal to or less than 0.010 mg/l. Below this concentration, organic analytical results are not quantitatively accurate; however, the analyses are useful to indicate the presence of a particular pollutant. The pesticide fraction is considered not quantifiable at concentrations equal to or less than 0.05 mg/l. Nonquantifiable results are designated in the tables with an asterisk (double asterisk for pesticides).

These detection limits shown on the data tables are not the same in all cases as the published detection limits for these pollutants by the same analytical methods. The detection limits used were reported with the analytical data and hence are the appropriate limits to apply to the data. Detection limit variation can occur as a result of a number of laboratory-specific, equipment-specific, and daily operator-specific factors. These factors can included day-to-day differences in machine calibration, variation in stock solutions, and variation in operators.

The statistical analysis of data includes some samples measured at concentrations considered not quantifiable. Data reported as an asterisk are considered as detected but below quantifiable concentrations, and a value of zero is used for averaging. Toxic organic, nonconventional, and conventional data reported with a "less than" sign are considered as detected, but not further quantifiable. A value of zero is also used for averaging. If a pollutant is reported as not detected, it is excluded in calculating the average. Finally, toxic metal values reported as less than a certain value were considered as not detected and a

value of zero is used in the calculation of the average. For example, three samples reported as ND, *, and 0.021 mg/l have an average value of 0.010 mg/l. The averages calculated are presented with the sampling data; these values were not used in the selection of pollutant parameters.

The method by which each sample was collected is indicated by number as follows:

1 one-time grab
2 24-hour manual composite
3 24-hour automatic composite
4 48-hour manual composite
5 48-hour automatic composite
6 72-hour manual composite
7 72-hour automatic composite

In the data collection portfolios, plants were asked to indicate whether or not any of the toxic pollutants were present in their effluent. Six of the plants indicated that toxic organic pollutants were believed to be absent from their effluent. One plant indicated that a few of the toxic organic pollutants are believed to be present in its effluent. A majority of the plants stated that some of the toxic metals were known to be present in their effluent. The responses for the toxic metals are summarized below:

Pollutant	Known Present	Believed Present	Believed Absent	Known Absent
Antimony	4	1	2	0
Arsenic	5	1	1	0
Beryllium	0	0	6	1
Cadmium	7	0	0	0
Chromium	1	2	4	0
Copper	6	1	0	0
Lead	7	0	0	0
Mercury	2	1	2	2
Nickel	3	3	1	0
Selenium	2	2	2	1
Silver	4	2	1	0
Thallium	1	2	4	0
Zinc	7	0	0	0

SINTER PLANT MATERIALS HANDLING WET AIR POLLUTION CONTROL

Fugitive lead emissions in the sintering area are controlled with scrubbers at two plants. Ventilation systems utilizing Venturi scrubbers are used to capture lead and other dusts emitted at the transfer points, conveyers, and crushing operations. Both plants using scrubbers currently recycle scrubber liquor as shown in Table V-1 (page 1718). Although the Agency did not sample this waste stream, it is expected to contain lead, cadmium, copper, zinc, and suspended solids based on the raw materials used and

the pollutants detected in blast furnace slag granulation wastewater.

BLAST FURNACE SLAG GRANULATION

Slag after zinc fuming, and blast furnace slag which is recycled or discarded without fuming, may be granulated by impacting the molten slag with a high-pressure water jet. Four plants report this waste stream. Three of these plants granulate discarded blast furnace slag, and one plant granulates zinc fuming furnace slag. The water use and discharge rates for blast furnace slag granulation are shown in Table V-2 (page 1718).

Blast furnace slag granulation sampling data are presented in Table V-10 (page 1726). This waste stream is characterized by the presence of treatable concentrations of cadmium, copper, lead, zinc and suspended solids.

BLAST FURNACE WET AIR POLLUTION CONTROL

There are six plants in this subcategory that smelt lead in blast furnaces. All six plants use baghouses to control blast furnace off-gases and particulates. None of the plants report any wastewater associated with blast furnace wet air pollution control.

DROSS REVERBERATORY FURNACE GRANULATION WASTEWATER

Sometimes slag, speiss, or matte produced in the dross reverberatory furnaces are granulated in water. Three plants report a dross reverberatory furnace granulation waste stream. The water use and discharge rates for this stream are shown in Table V-3 (page 1719).

As shown by Figure V-2, slag and matte granulation wastewater was a constituent of a sampled stream. The sampling data for this stream are presented in Table V-9 (page 1724). The sampled stream was characterized by treatable concentrations of lead and zinc. Speiss granulation wastewater may also contain these pollutants along with treatable concentrations of suspended solids, antimony, and arsenic.

DROSS REVERBERATORY FURNACE WET AIR POLLUTION CONTROL

Five plants report the use of dross reverberatory furnaces. Four of these plants use baghouses to control fumes from the furnace, while one plant uses a wet scrubber. The water use and discharge rates for the plant that uses the scrubber are presented in Table V-4 (page 1719).

Dross reverberatory furnace scrubber water was also part of the lead smelter discharge stream shown in Figure V-3. As discussed previously, this stream is characterized by treatable concentrations of antimony, cadmium, lead, zinc, and suspended solids.

ZINC FUMING FURNACE WET AIR POLLUTION CONTROL

Three plants report the use of fuming furnaces to recover zinc from blast furnace slag. The slag is heated with coal to high temperatures that oxidize zinc into particles which are then collected with air pollution control equipment. One plant uses a wet scrubber to collect the zinc particles while the other plants use baghouses. The water use and discharge rates for the plant that uses wet air pollution control are presented in Table V-5 (page 1720).

As shown by Figure V-3, a lead smelter discharge stream was sampled. This stream contained zinc fuming furnace scrubber water and other wastewaters. The sampling data for the discharge stream are presented in Table V-8 (page 1722). Treatable concentrations of antimony, cadmium, lead, zinc, and suspended solids characterize this stream.

HARD LEAD REFINING WET AIR POLLUTION CONTROL AND SLAG GRANULATION

Two plants use hard lead refining to produce antimonial lead. One of these plants generates wastewater from both refining furnace slag granulation and refining furnace wet air pollution control. The other plant reports that no wastewater is associated with its hard lead refining process. The respective water use and discharge rates for hard lead refining wet air pollution control and hard lead refining slag granulation are shown in Tables V-6 and V-7 (pages 1720 and 1721).

Hard lead refining wet air pollution control and slag granulation wastewaters were also constituents of the lead smelter discharge stream shown in Figure V-3. As discussed previously, this stream is characterized by treatable concentrations of antimony, cadmium, lead, zinc, and suspended solids.

FACILITY WASHDOWN

Work areas in primary lead facilities are often washed down to minimize employee exposure to fugitive lead. As might be expected, water used for facility washdown is quite variable due to physical differences in plant size. Information obtained from the dcp and from Section 308 requests indicates that facility washdown is often combined with other waters and is inseparable. However, information from three plants indicates that approximately 12 l/kkg (3 gal/ton) to 175 l/kkg (42 gal/ton) of lead produced is used for facility washdown. This wastewater is expected to contain treatable concentrations of toxic metals and suspended solids.

EMPLOYEE HAND WASH

Primary lead plant employees must wash their hands before breaks and end-of-shift to reduce occupational lead exposures. The Agency obtained water use and sampling data for this waste stream to discern whether a flow allowance as needed. The method for determining the regulatory flow allowance is presented in Section IX. Flow and sampling data were collected by the Agency at two integrated secondary lead smelters and battery manufacturing plants. The Agency has determined that each employee uses approximately 4.53 liters (1.2 gallons) of wash water per day. (There is no reason to believe that this would differ for primary lead plant employees.) It is reasonable to assume that this wastewater will contain treatable concentrations of lead, zinc, and TSS because occupational exposures are similar. Wastewater samples from secondary lead plants indicate that this wastewater is basic (pH of 8.0) and contains treatable concentrations of copper, lead, zinc, total suspended solids, and oil and grease. Wastewater sampling data are presented in the secondary lead supplement.

EMPLOYEE RESPIRATOR WASH

Respirators worn at primary lead smelters to reduce occupational lead exposures must be cleaned daily. The Agency collected water use and wastewater sampling data for this stream at two integrated secondary lead-battery manufacturing plants. The Agency has determined that approximately 7.34 liters (1.94 gallons) of wash water is used per employee per day to clean respirators, a rate unlikely to vary if primary lead respirators are washed. Calculation of the production normalized discharge allowance for this waste stream is discussed in Section IX. Wastewater sampling data, presented in the secondary lead supplemental development document, indicate the presence of copper, lead, zinc, and total suspended solids in this water. The pH is neutral (7.0).

LAUNDERING OF UNIFORMS

Employee uniforms must be laundered daily to meet industrial hygiene requirements. The Agency measured flows and sampled this wastewater since industry data were not available. Data were collected at two secondary lead and battery manufacturing facilities. The Agency has determined that approximately 21.6 liters (5.7 gallons) of water per employee per day is used for laundering of uniforms. (This rate is applicable to primary lead employee uniforms as well). The regulatory flow allowance for this stream is discussed in Section IX. Wastewater sampling data for this waste stream are presented in the secondary lead supplemental development document. These data show treatable concentrations of lead, zinc, and total suspended solids. The pH is slightly acidic (6.0).

TABLE V-1

WATER USE AND DISCHARGE RATES FOR SINTER PLANT MATERIALS HANDLING WET AIR POLLUTION CONTROL
(l/kkg of sinter production)

Plant Code	Percent Recycle or Reuse*	Production Normalized Water Use Flow	Production Normalized Discharge Flow
288	92	2538	203
290	87	3976	517

TABLE V-2

WATER USE AND DISCHARGE RATES FOR BLAST FURNACE SLAG GRANULATION
(l/kkg of blast furnace lead bullion produced)

Plant Code	Percent Recycle or Reuse*	Production Normalized Water Use Flow	Production Normalized Discharge Flow
280	100**	13060	0
286	100	20150	0
288	100	4135	0
290	71	13060	3730

* Reuse in processes associated with this subcategory.

** 55 percent of the water used in blast furnace slag granulation at this plant is entrained in the slag and transported to a slag pile. All reusable - not entrained in slag - is recycled tp slag granulation.

TABLE V-3

WATER USE AND DISCHARGE RATES FOR DROSS REVERBERATORY FURNACE GRANULATION WASTEWATER
(l/kkg of slag, speiss or matte granulated)

Plant Code	Percent Recycle or Reuse*	Production Normalized Water Use Flow	Production Normalized Discharge Flow
280	0	NR	NR
290	0	8379	8379
4502	100**	3134	3134

* Reuse in process associated with this subcategory

** 100 percent reuse in other planta processes

NR - Not reported in dcp

TABLE V-4

WATER USE AND DISCHARGE RATES FOR DROSS REVERBERATORY FURNACE WET AIR POLLUTION CONTROL
(l/kkg of dross reverberatory furnace production)

Plant ode	Percent Recycle or Reuse	Production Normalized Water Use Flow	Production Normalized Discharge Flow
280	0	9646	9646

TABLE V-5

WATER USE AND DISCHARGE RATES FOR ZINC FUMING FURNACE WET AIR POLLUTION CONTROL
(l/kkg of blast furnace lead bullion produced)

Plant Code	Percent Recycle or Reuse*	Production Normalized Water Use Flow	Production Normalized Discharge Flow
280	0	426	426

* Reuse in processes associated with the primary lead subcategory

TABLE V-6

WATER USE AND DISCHARGE RATES FOR HARD LEAD REFINING WET AIR POLLUTION CONTROL
(l/kkg of hard lead produced)

Plant Code	Percent Recycle or Reuse*	Production Normalized Water Use Flow	Production Normalized Discharge Flow
280	0	19836	19836

TABLE V-7

WATER USE AND DISCHARGE RATES FOR HARD LEAD REFINING SLAG GRANULATION
(l/kkg of hard lead produced)

Plant Code	Percent Recycle or Reuse*	Production Normalized Water Use Flow	Production Normalized Discharge Flow
280	NR	251297	251297

Table V-8

PRIMARY LEAD SAMPLING DATA
RAW SMELTING WASTEWATER

Pollutant (a)	Stream Code	Sample Typet	Source	Concentrations (mg/l, except as noted) Day 1	Day 2	Day 3	Average
Toxic Pollutants							
114. antimony	205	2		<0.1	<0.1	0.80	0.8
115. arsenic	205	2		0.05	0.07	0.16	0.093
116. asbestos	205	1		11 MFL			
117. beryllium	205	2		<0.005	<0.005	0.01	0.003
118. cadmium	205	2		0.22	1.1	2.5	1.27
119. chromium	205	2		0.05	<0.02	0.02	0.023
120. copper	205	2		0.08	0.06	0.17	0.1
121. cyanide	205	2		<0.02	<0.02	<0.02	<0.02
122. lead	205	2		6.7	4.0	13	7.9
123. mercury	205	2		0.005	0.008	0.0095	0.0075
124. nickel	205	2		<0.02	<0.02	0.110	0.004
125. selenium	205	2		0.02	0.015	<0.005	0.012
126. silver	205	2		<0.02	0.02	<0.02	0.007
127. thallium	205	2		<0.1	<0.1		<0.1
128. zinc	205	2		1.0	6.0	8.8	5.3
Nonconventionals							
chemical oxygen demand (COD)	205	2		6	4	<1	3.3
phenols (total; by by 4-AAP method)	205	2		0.086	0.059	0.006	0.050
total organic carbon (TOC)	205	2		5	<1	1.0	2.0

Table V-8 (Continued)

PRIMARY LEAD SAMPLING DATA
RAW SMELTING WASTEWATER

Pollutant (a)	Stream Code	Sample Type†	Source	Concentrations (mg/l, except as noted) Day 1	Day 2	Day 3	Average
Conventionals							
total suspended solids (TSS)	205	2		25	12	40	26
pH (standard units)	205	1		10.7	9.45	6.2	

(a) Two samples were analyzed for each of the toxic organic pollutants; no organics were found above their analytical quantification limit.

†Sample type. Note: These numbers also apply to subsequent samplng data tables in this section.

1 - one time grab
2 - 24-hour manual composite
3 - 24-hour automatic composite
4 - 48-hour manual composite
5 - 48-hour automatic composite
6 - 72-hour manual composite
7 - 72-hour automatic composite

Table V-9

PRIMARY LEAD SAMPLING DATA
MISCELLANEOUS WASTEWATER

Pollutant (a)	Stream Code	Sample Type	Concentrations (mg/l, except as noted) Source	Day 1	Day 2	Day 3	Average
Toxic Pollutants							
114. antimony	201	1	<0.01	<0.01			<0.01
	202	1	<0.01	<0.01			<0.01
115. arsenic	201	1	<0.005	0.018			0.018
	202	1	<0.005	<0.005			<0.005
118. cadmium	201	1	<0.001	0.044			0.044
	202	1	<0.001	0.04			0.04
119. chromium	201	1	<0.005	0.011			0.011
	202	1	<0.005	0.005			0.005
120. copper	201	1	0.026	0.082			0.082
	202	1	0.026	0.033			0.033
122. lead	201	1	0.014	1.6			1.6
	202	1	0.014	0.8			0.8
123. mercury	201	1	<0.0002	<0.0002			<0.0002
	202	1	<0.0002	<0.0002			<0.0002
124. nickel	201	1	<0.02	0.04			0.04
	202	1	<0.02	0.05			0.05
125. selenium	201	1	<0.005	<0.005			<0.005
	202	1	<0.005	<0.005			<0.005

Table V-9 (Continued)

PRIMARY LEAD SAMPLING DATA
MISCELLANEOUS WASTEWATER

Pollutant (a)	Stream Code	Sample Type	Concentrations (mg/l, except as noted) Source	Day 1	Day 2	Day 3	Average
126. silver	201	1	<0.001	<0.001			<0.001
	202	1	<0.001	<0.001			<0.001
127. thallium	201	1	<0.005	<0.005			<0.005
	202	1	<0.005	<0.005			<0.005
128. zinc	201	1	0.047	1.19			1.19
	202	1	0.047	1.09			1.09
Nonconventionals							
ammonia	201	1	0.4	0.4			0.4
	202	1	0.4	0.5			0.5
chemical oxygen demand (COD)	201	1	30	11			11.0
	202	1	30	18			18.0
phenols (total; by 4-AAP method)	201	1	0.008	0.016			0.016
	202	1	0.008	0.009			0.009
Conventionals							
total suspended solids (TSS)	201	1	45	10			10.0
	202	1	45	22			22.0
pH (standard units)	201	1	7.3	8.4			
	202	1	7.3	8.1			

(a) No toxic organic pollutants were analyzed for in samples from Streams 201 and 202.

Table V-10

PRIMARY LEAD SAMPLING DATA
PARTIAL TREATMENT SAMPLES
PLANT A

Pollutant (a)	Stream Code	Sample Type	Concentrations (mg/l, except as noted) Source	Day 1	Day 2	Day 3	Average
Toxic Pollutants							
115. arsenic	197	3	0.011	0.13			0.13
116. asbestos	197	1		1.8 MFL			1.8 MFL
118. cadmium	197	3	0.001	0.292			0.292
119. chromium	197	3	<0.005	0.015			0.015
120. copper	197	3	0.093	1.7			1.7
122. lead	197	3	0.25	38			38.0
123. mercury	197	3	<0.0002	<0.0002			<0.0002
124. nickel	197	3	0.04	0.2			0.2
126. selenium	197	3	<0.005	0.005			0.005
128. thallium	197	3	<0.005	<0.005			<0.005
129. zinc	197	3	0.25	54.2			54.2

Table V-10 (Continued)

PRIMARY LEAD SAMPLING DATA
PARTIAL TREATMENT SAMPLES
PLANT A

Pollutant (a)	Stream Code	Sample Type	Source	Concentrations (mg/l, except as noted) Day 1	Day 2	Day 3	Average
Nonconventionals							
ammonia	197	3		1.3			1.3
chemical oxygen demand (COD)	197	3		64			64.0
Conventionals							
total suspended solids (TSS)	197	3		336			336.0
pH (standard units)	197	1		6.8			

(a) No toxic organic pollutants were analyzed for in samples from Stream 197.

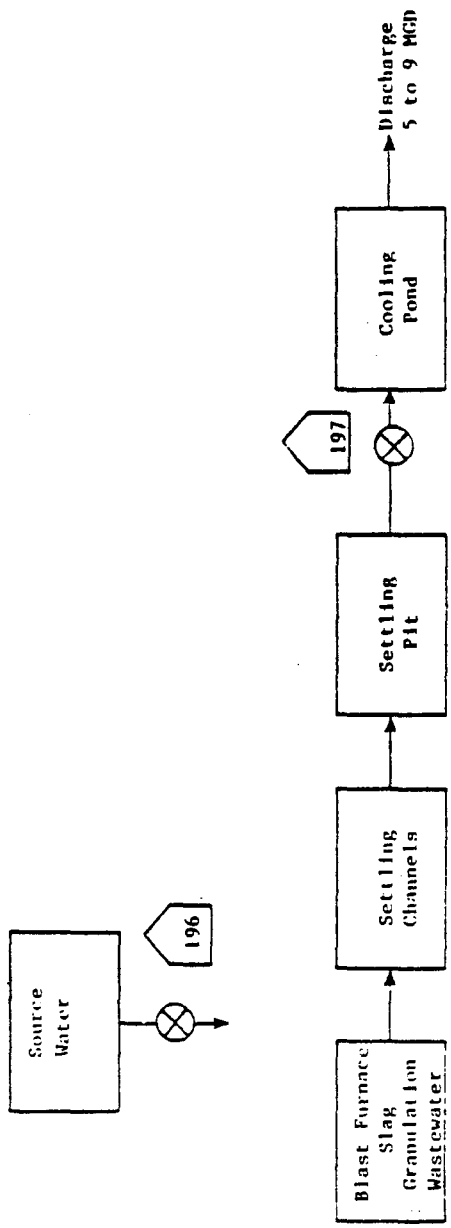

Figure V-1
SAMPLING SITES AT PRIMARY LEAD PLANT A

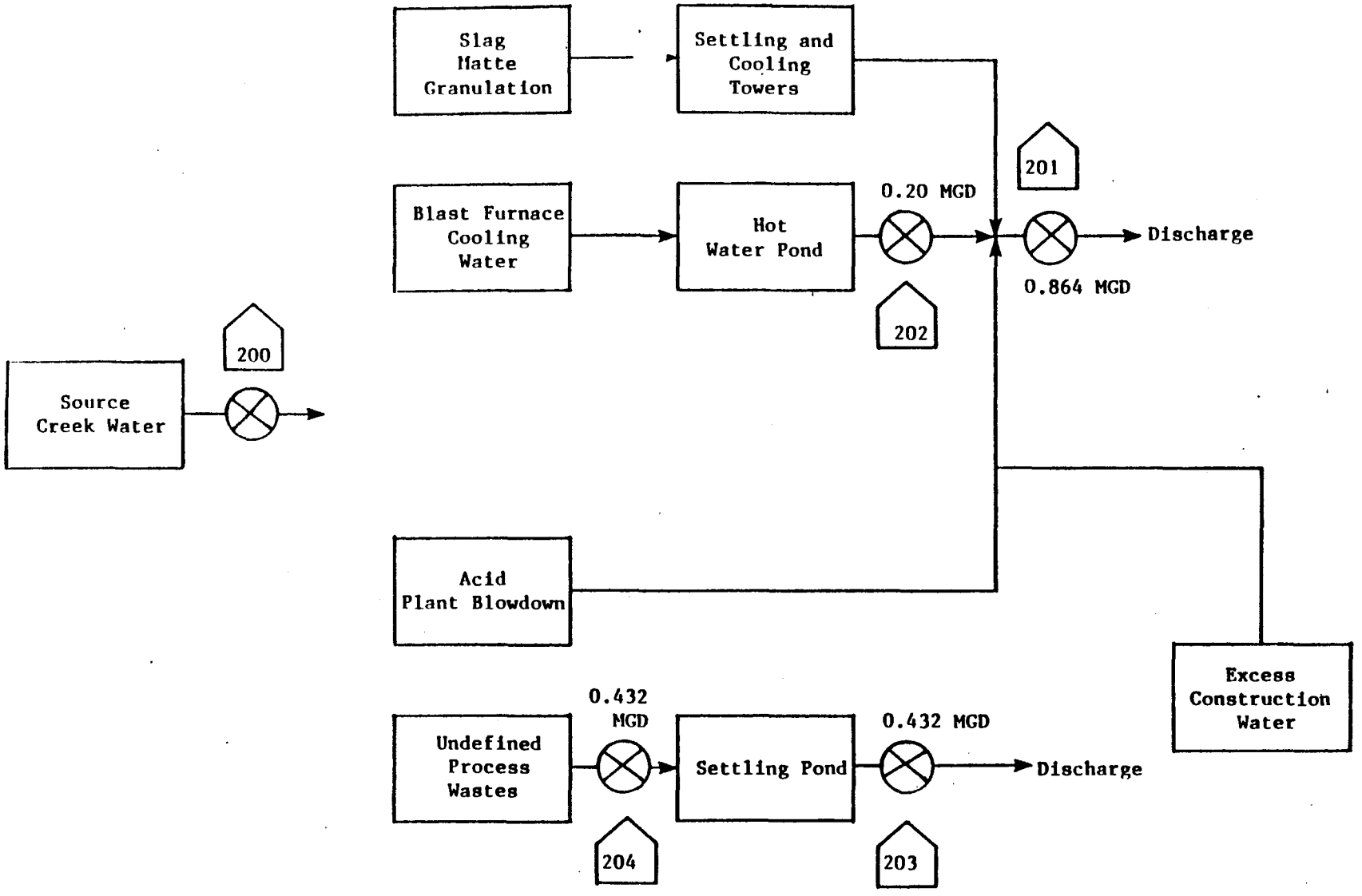

Figure V-2

SAMPLING SITES AT PRIMARY LEAD PLANT B

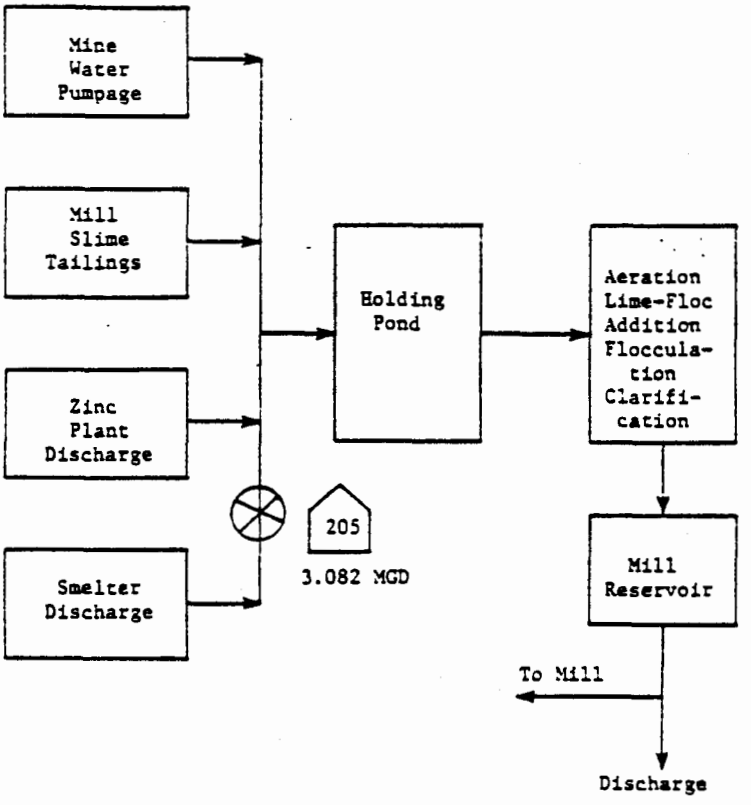

Figure V-3
SAMPLING SITES AT PRIMARY LEAD PLANT C

SECTION VI

SELECTION OF POLLUTANTS

This section examines chemical analysis data presented in section V from primary lead plants and discusses the selection or exclusion of pollutants for potential limitation. The basis for the regulation of toxic and other pollutants is presented in Section VI of the General Development Document. Additionally, each pollutant selected for potential limitation is discussed there. That discussion provides information about the nature of the pollutant (i.e., whether it is a naturally occurring substance, processed metal, or a manufactured compound); general physical properties and the form of the pollutant; toxic effects of the pollutant in humans and other animals; and behavior of the pollutant in POTW at the concentrations expected in industrial discharges.

The discussion that follows describes the analysis that was performed to select or exclude pollutants for further consideration for limitations and standards. The data from five wastewater samples collected at three lead plants are considered in this analysis. Three samples are raw wastewater samples collected on three separate days at one of the plants. Two of the samples are from partially treated wastewater collected at the remaining two plants. The partial treatment samples were collected from wastewater which passed through settling channels and a settling pit at one plant, and a hot water pond at the other plant. Pollutants are selected for further consideration if they are present in concentrations treatable by the technologies considered in this analysis. In Sections IX through XII, a final selection of the pollutants to be limited will be made, based on relative factors.

After proposal, the Agency re-evaluated the treatment performance of activated carbon adsorption to control toxic organic pollutants. The treatment performance for the acid extractable, base-neutral extractable, and volatile organic pollutants has been set equal to the analytical quantification limit of 0.010 mg/l. The analytical quantification limit for pesticides and total phenols (by 4-AAP method) is 0.005 mg/l, which is below the 0.010 mg/l accepted for the other toxic organics. However, to be consistent, the treatment performance of 0.010 mg/l is used for pesticides and total phenols. The 0.010 mg/l concentration is achievable, assuming enough carbon is used in the column and a suitable contact time is allowed. The frequency of occurrence for 36 of the toxic pollutants has been redetermined based on the revised treatment performance value. However, the revised analysis has not changed the pollutants which were selected for further consideration for limitation at proposal. No toxic organic pollutants were detected above their analytical quantification limit, as discussed below.

CONVENTIONAL AND NONCONVENTIONAL POLLUTANT PARAMETERS

This study examined samples from primary lead plants for three conventional pollutant parameters (oil and grease, total suspended solids, and pH) and four nonconventional pollutant parameters (ammonia, chemical oxygen demand, total organic carbon, and total phenols).

CONVENTIONAL AND NONCONVENTIONAL POLLUTANT PARAMETERS SELECTED

The conventional and nonconventional pollutants or pollutant parameters selected for limitation in this subcategory are:

total suspended solids (TSS)
pH

Total suspended solids (TSS) concentrations in the five samples ranged from 12 mg/l to 336 mg/l. All of the observed concentrations are above the 2.6 mg/l concentration considered achievable by identified treatment technology. Furthermore, most of the technologies used to remove toxic metals do so by converting these metals to precipitates. A limitation on total suspended solids ensures that sedimentation to remove precipitated toxic metals is effectively operating. For these reasons, total suspended solids is a pollutant parameter considered for limitation in this subcategory.

The pH values observed ranged from 6.2 to 10.7. Effective removal of toxic metals by precipitation requires careful control of pH. Therefore, pH is considered for limitation in this subcategory.

TOXIC POLLUTANTS

The frequency of occurrence of the toxic pollutants in the wastewater samples considered in this analysis is presented in Table VI-1 (page 1736). These data provide the basis for the categorization of specific pollutants, as discussed below. Table VI-1 is based on the raw wastewater sampling data from stream 205. Streams 197 and 202 were sampled after settling and were also used in the frequency count. In addition, streams 197 and 202 were not analyzed for toxic organic pollutants.

TOXIC POLLUTANTS NEVER DETECTED

The toxic pollutants listed in Table VI-2 (page 1740) were not detected in any wastewater samples from this subcategory; therefore, they are not selected for consideration in establishing effluent limitations and standards.

TOXIC POLLUTANTS NEVER FOUND ABOVE THEIR ANALYTICAL QUANTIFICATION CONCENTRATION

The toxic pollutants listed below were never found above their

analytical quantification concentration in any wastewater samples from this subcategory; therefore, they are not selected for consideration in establishing effluent limitations and standards.

4. benzene
6. carbon tetrachloride
23. chloroform
44. methylene chloride

TOXIC POLLUTANTS PRESENT BELOW CONCENTRATIONS ACHIEVABLE BY TREATMENT

The pollutants listed below are not selected for consideration in establishing limitations and standards because they were not found in any wastewater samples from this subcategory above concentrations considered achievable by existing or available treatment technologies. These pollutants are discussed individually following the list.

115. arsenic
117. beryllium
119. chromium
123. mercury
124. nickel
125. selenium
126. silver

Arsenic was detected above its analytical quantification limit in four of the five samples. The observed concentrations ranged from 0.05 mg/l to 0.016 mg/l. All of these values are below the 0.34 mg/l concentration considered achievable by identified treatment technology. Therefore, arsenic is not considered for limitation.

Beryllium was detected at its analytical quantification limit (0.01 mg/l) in one of the five samples considered in this analysis. The single reported value is below the 0.2 mg/l concentration considered achievable by identified treatment technology. Therefore, beryllium is not selected for limitation.

Chromium was detected at or above its analytical quantification limit in four of the five samples. The observed concentrations ranged from 0.005 mg/l to 0.05 mg/l. All of these values are below the 0.07 mg/l concentration considered achievable by identified treatment technology. Therefore, chromium is not considered for limitation.

Mercury was detected above its analytical quantification limit in three of the five samples. The observed concentrations ranged from 0.005 mg/l to 0.0095 mg/l. All of these values are below the 0.036 mg/l concentration considered achievable by identified treatment technology. Therefore, mercury is not considered for limitation.

Nickel was detected above its analytical quantification limit in

three of the five samples. The observed concentrations ranged from 0.05 mg/l to 0.2 mg/l. All of these values are below the 0.22 mg/l concentration considered achievable by identified treatment technology. Therefore, nickel is not considered for limitation.

Selenium was detected above its analytical quantification limit in two of the five samples considered in this analysis. The two reported concentrations are 0.02 mg/l, and 0.015 mg/l. Both of these values are below the 0.20 mg/l concentration considered achievable by identified treatment technology. For this reason, selenium is not considered for limitation.

Silver was detected at its analytical quantification limit (0.02 mg/l) in one of the five samples. The single reported value is below the 0.07 mg/l concentration considered achievable by identified treatment technology. Therefore, silver is not selected for limitation.

TOXIC POLLUTANTS DETECTED IN A SMALL NUMBER OF SOURCES

Toxic pollutants detectable in the effluent from only a small number of sources within the subcategory and uniquely related to only these sources are not appropriate for limitation in a national regulation. The following pollutants were not selected for limitation on this basis:

114. antimony
120. copper

Antimony was detected above its analytical quantification limit in only one of the five samples considered in the analysis. The reported value (0.8 mg/l) is above the 0.47 mg/l concentration considered achievable by identified treatment technology. Antimony was not detected in the other four samples, including two from the same plant which yielded the 0.8 mg/l value. Since antimony was not detected at two plants, and only detected in one of three samples at one plant, it is not selected for limitation.

Copper was detected above its analytical quantification limit in all five samples. However, copper was present in concentrations greater than the 0.39 mg/l concentration considered achievable by identified treatment technology in only one of these samples. Because it was found at a treatable concentration in only one of five samples, copper is not selected for limitation.

TOXIC POLLUTANTS SELECTED FOR CONSIDERATION IN ESTABLISHING LIMITATIONS

The toxic pollutants listed below are selected for further consideration in establishing limitations and standards for this subcategory. The toxic pollutants selected are each discussed following the list.

116. asbestos
118. cadmium
122. lead
128. zinc

Asbestos was detected in one of two samples analyzed with values of 1.8 and 11 million fibers per liter (MFL). One of these values is above the 10 MFL attainable by identified treatment technology. Therefore, asbestos is selected for further consideration for limitation.

Cadmium was detected above its analytical quantification limit in all five of the samples considered in this analysis. The observed concentrations ranged from 0.04 mg/l to 2.5 mg/l. Four of the five samples contain concentrations of cadmium that are above the 0.049 mg/l concentration considered achievable by identified treatment technology. Therefore, cadmium is selected for further consideration for limitation.

Lead was detected above its analytical quantification limit in all five samples. The observed concentrations ranged from 0.8 mg/l to 38 mg/l. All of these values are well above the 0.08 mg/l concentration considered achievable by identified treatment technology. Therefore, lead is selected for further consideration for limitation.

Zinc was detected above its analytical quantification limit in all five samples. The observed concentrations ranged from 1.0 mg/l to 54.2 mg/l. All of these values are above the 0.23 mg/l concentration considered achievable by identified treatment technology. Therefore, zinc is selected for further consideration for limitation.

Table VI-1

FREQUENCY OF OCCURRENCE OF TOXIC POLLUTANTS
PRIMARY LEAD
RAW WASTEWATER

Pollutant	Analytical Quantification Concentration (mg/l)(a)	Treatable Concentration (mg/l)(b)	Number of Streams Analyzed	Number of Samples Analyzed	ND	Detected Below Quantification Concentration	Detected Below Treatable Concentration	Detected Above Treatable Concentration
1. acenaphthene	0.010	0.010	1	2	2			
2. acrolein	0.010	0.010	1	2	2			
3. acrylonitrile	0.010	0.010	1	2	2			
4. benzene	0.010	0.010	1	2		2		
5. benzidine	0.010	0.010	1	2	2			
6. carbon tetrachloride	0.010	0.010	1	2	1	1		
7. chlorobenzene	0.010	0.010	1	2	2			
8. 1,2,4-trichlorobenzene	0.010	0.010	1	2	2			
9. hexachlorobenzene	0.010	0.010	1	2	2			
10. 1,2-dichloroethane	0.010	0.010	1	2	2			
11. 1,1,1-trichloroethane	0.010	0.010	1	2	2			
12. hexachloroethane	0.010	0.010	1	2	2			
13. 1,1-dichloroethane	0.010	0.010	1	2	2			
14. 1,1,2-trichloroethane	0.010	0.010	1	2	2			
15. 1,1,2,2-tetrachloroethane	0.010	0.010	1	2	2			
16. chloroethane	0.010	0.010	1	2	2			
17. bis(chloromethyl) ether	0.010	0.010	1	2	2			
18. bis(2-chloroethyl) ether	0.010	0.010	1	2	2			
19. 2-chloroethyl vinyl ether	0.010	0.010	1	2	2			
20. 2-chloronaphthalene	0.010	0.010	1	2	2			
21. 2,4,6-trichlorophenol	0.010	0.010	1	2	2			
22. parachlorometa cresol	0.010	0.010	1	2	2			
23. chloroform	0.010	0.010	1	2		2		
24. 2-chlorophenol	0.010	0.010	1	2	2			
25. 1,2-dichlorobenzene	0.010	0.010	1	2	2			
26. 1,3-dichlorobenzene	0.010	0.010	1	2	2			
27. 1,4-dichlorobenzene	0.010	0.010	1	2	2			
28. 3,3'-dichlorobenzidine	0.010	0.010	1	2	2			
29. 1,1-dichloroethylene	0.010	0.010	1	2	2			
30. 1,2-trans-dichloroethylene	0.010	0.010	1	2	2			
31. 2,4-dichlorophenol	0.010	0.010	1	2	2			
32. 1,2-dichloropropane	0.010	0.010	1	2	2			
33. 1,3-dichloropropylene	0.010	0.010	1	2	2			
34. 2,4-dimethylphenol	0.010	0.010	1	2	2			
35. 2,4-dinitrotoluene	0.010	0.010	1	2	2			
36. 2,6-dinitrotoluene	0.010	0.010	1	2	2			
37. 1,2-diphenylhydrazine	0.010	0.010	1	2	2			

Table VI-1 (Continued)

FREQUENCY OF OCCURRENCE OF TOXIC POLLUTANTS
PRIMARY LEAD
RAW WASTEWATER

Pollutant	Analytical Quantification Concentration (mg/l)(a)	Treatable Concentration (mg/l)(b)	Number of Streams Analyzed	Number of Samples Analyzed	ND	Detected Below Quantification Concentration	Detected Below Treatable Concentration	Detected Above Treatable Concentration
38. ethylbenzene	0.010	0.010	1	2	2			
39. fluoranthene	0.010	0.010	1	2	2			
40. 4-chlorophenyl phenyl ether	0.010	0.010	1	2	2			
41. 4-bromophenyl phenyl ether	0.010	0.010	1	2	2			
42. bis(2-chloroisopropyl) ether	0.010	0.010	1	2	2			
43. bis(2-chloroethoxy) methane	0.010	0.010	1	2	2			
44. methylene chloride	0.010	0.010	1	2		2		
45. methyl chloride	0.010	0.010	1	2	2			
46. methyl bromide	0.010	0.010	1	2	2			
47. bromoform	0.010	0.010	1	2	2			
48. dichlorobromomethane	0.010	0.010	1	2	2			
49. trichlorofluoromethane	0.010	0.010	1	2	2			
50. dichlorodifluoromethane	0.010	0.010	1	2	2			
51. chlorodibromomethane	0.010	0.010	1	2	2			
52. hexachlorobutadiene	0.010	0.010	1	2	2			
53. hexachlorocyclopentadiene	0.010	0.010	1	2	2			
54. isophorone	0.010	0.010	1	2	2			
55. naphthalene	0.010	0.010	1	2	2			
56. nitrobenzene	0.010	0.010	1	2	2			
57. 2-nitrophenol	0.010	0.010	1	2	2			
58. 4-nitrophenol	0.010	0.010	1	2	2			
59. 2,4-dinitrophenol	0.010	0.010	1	2	2			
60. 4,6-dinitro-o-cresol	0.010	0.010	1	2	2			
61. N-nitrosodimethylamine	0.010	0.010	1	2	2			
62. N-nitrosodiphenylamine	0.010	0.010	1	2	2			
63. N-nitrosodi-n-propylamine	0.010	0.010	1	2	2			
64. pentachlorophenol	0.010	0.010	1	2	2			
65. phenol	0.010	0.010	1	2	2			
66. bis(2-ethylhexyl) phthalate	0.010	0.010	1	2	2			
67. butyl benzyl phthalate	0.010	0.010	1	2	2			
68. di-n-butyl phthalate	0.010	0.010	1	2	2			
69. di-n-octyl phthalate	0.010	0.010	1	2	2			
70. diethyl phthalate	0.010	0.010	1	2	2			
71. dimethyl phthalate	0.010	0.010	1	2	2			
72. benzo(a)anthracene	0.010	0.010	1	2	2			
73. benzo(a)pyrene	0.010	0.010	1	2	2			
74. 3,4-benzofluoranthene	0.010	0.010	1	2	2			

Table VI-1 (Continued)

FREQUENCY OF OCCURRENCE OF TOXIC POLLUTANTS
PRIMARY LEAD
RAW WASTEWATER

Pollutant	Analytical Quantification Concentration (mg/l)(a)	Treatable Concentration (mg/l)(b)	Number of Streams Analyzed	Number of Samples Analyzed	ND	Detected Below Quantification Concentration	Detected Below Treatable Concentration	Detected Above Treatable Concentration
75. benzo(k)fluoranthene	0.010	0.010	1	2	2			
76. chrysene	0.010	0.010	1	2	2			
77. acenaphthylene	0.010	0.010	1	2	2			
78. anthracene (c)	0.010	0.010	1	2	2			
79. benzo(ghi)perylene	0.010	0.010	1	2	2			
80. fluorene	0.010	0.010	1	2	2			
81. phenanthrene (c)	0.010	0.010	1	2	2			
82. dibenzo(a,h)anthracene	0.010	0.010	1	2	2			
83. indeno(1,2,3-cd)pyrene	0.010	0.010	1	2	2			
84. pyrene	0.010	0.010	1	2	2			
85. tetrachloroethylene	0.010	0.010	1	2	2			
86. toluene	0.010	0.010	1	2	2			
87. trichloroethylene	0.010	0.010	1	2	2			
88. vinyl chloride	0.010	0.010	1	2	2			
89. aldrin	0.005	0.010	1	2	2			
90. dieldrin	0.005	0.010	1	2	2			
91. chlordane	0.005	0.010	1	2	2			
92. 4,4'-DDT	0.005	0.010	1	2	2			
93. 4,4'-DDE	0.005	0.010	1	2	2			
94. 4,4'-DDD	0.005	0.010	1	2	2			
95. alpha-endosulfan	0.005	0.010	1	2	2			
96. beta-endosulfan	0.005	0.010	1	2	2			
97. endosulfan sulfate	0.005	0.010	1	2	2			
98. endrin	0.005	0.010	1	2	2			
99. endrin aldehyde	0.005	0.010	1	2	2			
100. heptachlor	0.005	0.010	1	2	2			
101. heptachlor epoxide	0.005	0.010	1	2	2			
102. alpha-BHC	0.005	0.010	1	2	2			
103. beta-BHC	0.005	0.010	1	2	2			
104. gamma-BHC	0.005	0.010	1	2	2			
105. delta-BHC	0.005	0.010	1	2	2			
106. PCB-1242 (d)	0.005	0.010	1	2	2			
107. PCB-1254 (d)	0.005	0.010	1	2	2			
108. PCB-1221 (d)	0.005	0.010	1	2	2			
109. PCB-1232 (e)	0.005	0.010	1	2	2			
110. PCB-1248 (e)	0.005	0.010	1	2	2			
111. PCB-1260 (e)	0.005	0.010	1	2	2			
112. PCB-1016 (e)	0.005	0.010	1	2	2			

Table VI-1 (Continued)

FREQUENCY OF OCCURRENCE OF TOXIC POLLUTANTS
PRIMARY LEAD
RAW WASTEWATER

Pollutant	Analytical Quantification Concentration (mg/l)(a)	Treatable Concentration (mg/l)(b)	Number of Streams Analyzed	Number of Samples Analyzed	ND	Detected Below Quantification Concentration	Detected Below Treatable Concentration	Detected Above Treatable Concentration
113. toxaphene	0.005	0.01	1	2	2			
114. antimony	0.100	0.47	3	5	4			1
115. arsenic	0.010	0.34	3	5	1		4	
116. asbestos	10 MFL	10 MFL	2	2		1		1
117. beryllium	0.010	0.20	3	5	4		1	
118. cadmium	0.002	0.049	3	5			1	4
119. chromium	0.005	0.07	3	5	1		4	
120. copper	0.009	0.39	3	5			4	1
121. cyanide	0.02(f)	0.047	3	5	5			
122. lead	0.020	0.08	3	5				5
123. mercury	0.0001	0.036	3	5	2		3	
124. nickel	0.005	0.22	3	5	2		3	
125. selenium	0.01	0.20	3	5	2	1	2	
126. silver	0.02	0.07	3	5	4		1	
127. thallium	0.100	0.34	3	4	4			
128. zinc	0.050	0.23	3	5				5
129. 2,3,7,8-tetrachlorodibenzo-p-dioxin (TCDD)					Not Analyzed			

(a) Analytical quantification concentration was reported with data (see Section V).

(b) Treatable concentrations are based on performance of lime precipitation, sedimentation, and filtration for toxic metal pollutants and activated carbon adsorption for toxic organic pollutants.

(c), (d), (e) Reported together.

(f) Analytical quantification concentration for EPA Method 335.2, Toxic Cyanide Methods for Chemical Analysis of Water and Wastes, EPA-600/4-79-020, March 1979.

TABLE VI-2

TOXIC POLLUTANTS NEVER DETECTED

1. acenapthene
2. acrolein
3. acrylonitrile
5. benzidine
7. chlorobenzene
8. 1,2,4-trichlorobenzene
9. hexachlorobenzene
10. 1,2-dichloroethane
11. 1,1,1-trichloroethane
12. hexachloroethane
13. 1,1-dichloroethane
14. 1,1,2-trichloroethane
15. 1,1,2,2-tetrachloroethane
16. chloroethane
17. DELETED
18. bis(2-chloroethyl) ether
19. 2-chloroethyl vinyl ether
20. 2-chloronaphthalene
21. 2,4,6-trichlorophenol
22. parachlorometa cresol
24. 2-chlorophenol
25. 1,2-dichlorobenzene
26. 1,3-dichlorobenzene
27. 1,4-dichlorobenzene
28. 3,3'-dichlorobenzidine
29. 1,1-dichloroethylene
30. 1,2-trans-dichloroethylene
31. 2,4-dichlorophenol
32. 1,2-dichloropropane
33. 1,3-dichloropropylene
34. 2,4-dimethylphenol
35. 2,4-dinitrotoluene
36. 2,6-dinitrotoluene
37. 1,2-diphenylhydrazine
38. ethylbenzene
39. fluoranthene
40. 4-chlorophenyl phenyl ether
41. 4-bromophenyl phenyl ether
42. bis(2-chloroisopropyl) ether
43. bis(2-chloroethoxy) methane
45. methyl chloride
46. methyl bromide
47. bromoform
48. dichlorobromomethane
49. DELETED
50. DELETED

TABLE VI-2 (Continued)

TOXIC POLLUTANTS NEVER DETECTED

51. chlorodibromomethane
52. hexachlorobutadiene
53. hexachlorocyclopentadiene
54. isophorone
55. naphthalene
56. nitrobenzene
57. 2-nitrophenol
58. 4-nitrophenol
59. 2,4-dinitrophenol
60. 4,6-dinitro-o-cresol
61. N-nitrosodimethylamine
62. N-nitrosodiphenylamine
63. N-nitrosodi-n-propylamine
64. pentachlorophenol
65. phenol
66. bis(2-ethylhexyl) phthalate
67. butyl benzyl phthalate
68. di-n-butyl phthalate
69. di-n-octyl phthalate
70. diethyl phthalate
71. dimethyl phthalate
72. benzo(a)anthracene
73. benzo(a)pyrene
74. 3,4-benzofluoranthene
75. benzo(k)fluoranthene
76. chrysene
77. acenaphthylene
78. anthracene (a)
79. benzo(ghi)perylene
80. fluorene
81. phenanthrene (a)
82. dibenzo(a,h)anthracene
83. indeno (1,2,3-cd)pyrene
84. pyrene
85. tetrachloroethylene
86. toluene
87. trichloroethylene
88. vinyl chloride
89. aldrin
90. dieldrin
91. chlordane
92. 4,4'-DDT
93. 4,4'-DDE
94. 4,4'-DDD

TABLE VI-2 (Continued)

TOXIC POLLUTANTS NEVER DETECTED

95.	alpha-endosulfan	
96.	beta-endosulfan	
97.	endosulfan sulfate	
98.	endrin	
99.	endrin aldehyde	
100.	heptachlor	
101.	heptachlor epoxide	
102.	alpha-BHC	
103.	beta-BHC	
104.	gamma-BHC	
105.	delta-BHC	
106.	PCB-1242	(b)
107.	PBC-1254	(b)
108.	PCB-1221	(b)
109.	PCB-1232	(c)
110.	PCB-1248	(c)
111.	PCB-1260	(c)
112.	PCB-1016	(c)
113.	toxaphene	
121.	cyanide	
127.	thallium	
129.	2,3,7,8-tetrachlorodibenzo-p-dioxin (TCDD)	

(a), (b), (c) Reported together, as a combined value

SECTION VII

CONTROL AND TREATMENT TECHNOLOGIES

The preceding sections of this supplement discussed the wastewater sources, flows, and characteristics of the wastewaters from primary lead plants. This section summarizes the description of these wastewaters and indicates the treatment technologies which are currently practiced by the primary lead subcategory.

PRIOR REGULATIONS

EPA promulgated BPT effluent limitations for the primary lead subcategory on February 27, 1975 under Subpart G of 40 CFR Part 421. These effluent limitations are based on control technologies dependent on geographical location. For primary lead smelters located in areas of net evaporation, zero discharge of all process wastewater pollutants is required. It was determined that the best practicable control technology currently available for facilities in net evaporation areas is recycle and reuse of wastewater after, as needed, neutralization and settling, and disposal through solar evaporation. The Agency recognized that facilities located in geographic areas of historical net evaporation may experience periods of net precipitation which would inhibit their ability to meet zero discharge of process wastewater pollutants. As such, catastrophic and net monthly precipitation stormwater allowances were promulgated. Plants located in areas of net evaporation under the promulgated BPT are allowed to discharge, during any calendar month, a volume of process water equal to the difference between the precipitation for that month that falls within the wastewater impoundment and the evaporation from the surface of the impoundment for that month. Discharges resulting from net monthly precipitation were subject to concentration-based limitations achievable with lime precipitation and sedimentation technology.

The BPT effluent limitations also contained a catastrophic storm water allowance for plants located in areas of net evaporation. This stormwater exemption states that a volume of process wastewater in excess of the 10-year, 24-hour storm event falling on a wastewater impoundment may be discharged. This discharge was not subject to effluent limitations.

For those facilities located in geographic areas of net precipitation, the best practicable control technology currently available was determined to be chemical precipitation and sedimentation. Effluent limitations developed from this technology are mass-based limitations and allow a continuous discharge of process wastewater including discharges from associated acid plants. Pollutant parameters regulated under BPT were cadmium, lead, zinc, pH, and TSS.

BAT effluent limitations previously promulgated for the primary lead subcategory were essentially identical to BPT. However, BAT required impoundments to be sized for the 25-year, 24-hour storm event instead of the 10-year event that was used for BPT.

CURRENT CONTROL AND TREATMENT PRACTICES

This section presents a summary of the control and treatment technologies that are currently applied to each of the sources generating wastewater in this subcategory. As discussed in Section V, wastewater associated with the primary lead subcategory is characterized by the presence of the toxic metal pollutants and suspended solids. This analysis is supported by raw (untreated) wastewater data presented for specific sources as well as combined waste streams in Section V. Generally, these pollutants are present in each of the waste streams at treatable concentrations, so these waste streams are commonly combined for treatment to reduce the concentrations of these pollutants. Construction of one wastewater treatment system for combined treatment allows plants to take advantage of economies of scale and, in some instances, to combine streams of differing alkalinity to reduce treatment chemical requirements. Two plants in this subcategory currently have combined wastewater treatment systems, one has lime precipitation and sedimentation, and one has lime precipitation, sedimentation, and filtration. As such, three options have been selected for consideration for BPT, BAT, BDT, and pretreatment in this subcategory, based on combined treatment of these compatible waste streams. As mentioned in Section V, the Agency has learned that one primary lead facility has closed since the dcp information was collected. Wastewater treatment data from this plant are included in the following discussion.

SINTER PLANT MATERIALS HANDLING WET AIR POLLUTION CONTROL

Two plants use wet scrubbers to control fugitive lead and other dusts emitted at the transfer points, conveyers, and crushing operations in the sintering area. Both plants practice extensive recycle of this wastewater (87 and 92 percent). One of the plants uses a thickener and settling basins to recover lead solids from this wastewater. The solids are returned to the sintering process. Water is recycled to the scrubber from the settling basins. Some of the wastewater is discharged to central treatment consisting of lime and polymer addition and settling, followed by additional settling in a pond. The other plant settles this wastewater in a thickener before recycle. Overflow from the thickener is sent to a settling pond which provides makeup water to the blast and dross reverberatory slag granulation operations.

BLAST FURNACE WET AIR POLLUTION CONTROL

As discussed in Section V, no primary lead plants report any wastewater associated with blast furnace wet air pollution control. All plants with blast furnaces use baghouses to control particulates in the off-gases.

BLAST FURNACE SLAG GRANULATION

This wastewater is generated when blast furnace slag or zinc fuming furnace slag is granulated by water. Four of the seven primary lead plants reported this waste stream. All four plants practice extensive or total recycle or reuse of blast furnace slag granulation wastewater (three plants practice total recycle or reuse).

The blast furnace slag granulation wastewater is treated by most of the plants prior to recycle or reuse. The treatment schemes include the following:

(1) No treatment, total recycle of reusable water (some water entrained in the slag goes to a slag pile),

(2) Lime precipitation, total reuse,

(3) Cooling towers, settling ponds, total recycle or reuse; and

(4) Neutralization with caustic, sedimentation in lagoons, cooling towers, partial recycle, and end-of-pipe treatment consisting of lime precipitation, flocculation, sedimentation, and filtration.

As mentioned in Section V, slag granulation wastewater contains suspended solids and metals.

DROSS REVERBERATORY SLAG GRANULATION WASTEWATER

Slag, speiss, and matte produced in the dross reverberatory furnaces are granulated with water at three plants. Wastewater from this process contains suspended solids and dissolved toxic metal pollutants present at treatable concentrations. All three plants report treating the granulation wastewater prior to reuse or discharge. Treatment schemes include the following:

(1) Sedimentation, reuse;

(2) Settling, lime precipitation, flocculation, sedimentation, reuse in ore mining operations or discharge; and

(3) Neutralization with caustic, sedimentation, cooling towers, and partial recycle followed by end-of-pipe treatment consisting of lime precipitation, flocculation, sedimentation, and filtration.

DROSS REVERBERATORY FURNACE WET AIR POLLUTION CONTROL

One plant uses a once-through wet scrubber to control dross reverberatory furnace fumes. The scrubbing wastewater is combined with other process wastewater and treated. The treatment scheme includes initial settling in ponds, lime precipitation, flocculation, and thickening. As discussed in Section V, the combined wastewater stream contains suspended solids and metals.

ZINC FUMING FURNACE WET AIR POLLUTION CONTROL

Three plants use fuming furnaces to recover zinc from blast furnace slag. One of these plants uses a once-through scrubber to clean the emissions from the zinc fuming furnace. The scrubbing wastewater is combined with other process wastewater and treated using settling ponds and thickening. As mentioned in Section V, the combined wastewater stream contains suspended solids and metals.

HARD LEAD REFINING WET AIR POLLUTION CONTROL AND SLAG GRANULATION

Antimonial lead is produced at two plants with only one of these plants generating wastewater from hard lead refining. At this plant, refining furnace scrubber wastewater, and refining furnace slag granulation wastewater are combined with other process wastewater and treated prior to reuse in ore mining operations or discharge. The treatment scheme includes settling, lime precipitation, flocculation, and sedimentation. The combined wastewater contains suspended solids and metals.

FACILITY WASHDOWN

Four plants report use of plant washdown water to minimize employee exposure to fugitive lead. This wastewater is expected to contain treatable concentrations of lead and other toxic metals, as well as suspended solids. The following treatment practices are currently in use:

1. Lime addition, clarification, and multimedia filtration - one plant,

2. Lime and polymer addition, followed by sedimentation - one plant,

3. Sedimentation in lagoons, followed by reuse - one plant, and

4. Evaporation and reuse - one plant.

WASTEWATER FROM INDUSTRIAL HYGIENE COMPLIANCE

Primary lead smelters are required to reduce occupational lead exposures by laundering employee uniforms, washing employee

respirators, and ensuring that employees use hand wash facilities. Through wastewater sampling efforts after proposal at two secondary lead-battery manufacturing facilities, the Agency has determined that these wastewaters are contaminated and warrant treatment. (There is no reason to believe that industrial hygiene wastewater from primary lead plants should vary from that at secondary lead plants.) The following treatment schemes are used to treat the lead and suspended solids contained in this wastewater.

1. Lime addition, clarification, and multimedia filtration - one plant,

2. Lime and polymer addition followed by sedimentation - one plant,

3. Treatment along with sanitary wastes - one plant, and

4. No treatment - discharge to POTW - three plants.

CONTROL AND TREATMENT OPTIONS

Based on an examination of the wastewater sampling data, three control and treatment technologies that effectively control the pollutants found in primary lead smelting wastewaters were selected for evaluation. The options selected for evaluation are discussed below.

OPTION A

Option A for the primary lead subcategory is chemical precipitation and sedimentation followed by partial recycle of treated effluent for facility washdown. Chemical precipitation and sedimentation consists of lime addition to precipitate metals followed by gravity sedimentation for the removal of suspended solids, including the metal precipitates.

OPTION B

Option B for the primary lead subcategory consists of chemical precipitation and sedimentation (lime and settle) technology considered in Option A plus in-plant reduction of process wastewater flow. Water recycle and reuse are the principal control mechanisms for flow reduction.

OPTION C

Option C for the primary lead subcategory consists of in-process flow reduction, chemical precipitation, and sedimentation technology of Option B plus sulfide precipitation, sedimentation, and multimedia filtration technology. Sulfide precipitation is used to further reduce the concentration of dissolved metals and multimedia filtration is used to remove suspended solids, including precipitates of metals, beyond the concentration

attainable by gravity sedimentation. The filter suggested is the gravity, mixed-media type, although other forms of filters such as rapid sand filters or pressure filters would perform satisfactorily.

TREATMENT OPTIONS REJECTED

Prior to proposing mass limitations for the primary lead subcategory, reverse osmosis was evaluated as a treatment technology. Reverse osmosis was rejected, however, because it is not demonstrated in the nonferrous metals manufacturing category, nor is it clearly transferable. The reverse osmosis treatment scheme considered is discussed below.

OPTION F

Option F for the primary lead subcategory consisted of reverse osmosis and evaporation technology added to the in-process flow reduction, chemical precipitation, sedimentation, and multimedia filtration technology considered in Option C. Option F was provided for complete recycle of the treated water by controlling the concentration of dissolved solids. Multiple effect evaporation was used to dewater the brines rejected from reverse osmosis.

SECTION VIII

COSTS, ENERGY, AND NONWATER QUALITY ASPECTS

This section presents the costs associated with the control and treatment technologies identified in Section VII for wastewaters from primary lead plants. The energy consumption and nonwater quality aspects of each technology, such as air pollution, are discussed below.

Compliance costs were developed for the six operating primary lead plants. Costs are estimates of capital and annual costs necessary to add and operate treatment not currently in place and necessary for each plant to meet the applicable limitation or standard.

The seventh plant is currently closed with no known immediate plans of reopening. Therefore, compliance costs were not developed for this plant.

TREATMENT OPTIONS COSTED FOR EXISTING SOURCES

Three treatment options were considered for the primary lead subcategory. These options are summarized below and schematically presented in Figures X-1 through X-3 (pages 1788 - 1790), Section X.

OPTION A

Option A consists of chemical precipitation and sedimentation (lime and settle) technology applied to combined wastewater streams followed by partial recycle of treated effluent for facility washdown. Lime and settle technology is currently in place at two plants.

OPTION B

For Option B, in-process flow reduction measures, consisting of the recycle or reuse of granulation wastewater, are added to the chemical precipitation and sedimentation (lime and settle) end-of-pipe technology of Option A. There is only one plant that discharges blast furnace slag granulation wastewater and dross reverberatory furnace granulation wastewater. At this plant, these wastewaters are partially recycled through a preliminary treatment system consisting of cooling towers, neutralization with caustic, and sedimentation lagoons. This plant has the hardware in place to achieve the additional flow reduction that is required for these wastewaters at BAT. Costs associated with Option B for this plant are due to the segregation of the blast furnace slag granulation wastewater from dross reverberatory granulation wastewater. Two plants operate sinter plant materials handling wet scrubbers and practice extensive recycle

and should therefore experience no costs due to flow reduction for this stream.

OPTION C

Option C adds to the Option B treatment scheme by adding sulfide precipitation and sedimentation followed by multimedia filtration. Thus, the Option C end-of-pipe treatment scheme consists of lime and settle, sulfide and settle, and multimedia filtration. One plant currently has end-of-pipe filtration in place.

Cost Methodology

A detailed discussion of the methodology used to develop the compliance costs is presented in Section VIII of the General Development Document. Plant-by-plant compliance costs have been estimated for the nonferrous metals manufacturing category and are presented in the administrative record supporting this regulation. A comparison of the costs developed for proposal and the revised costs for the final regulation are presented in Tables VIII-1 (page 1754) and VIII-2 (page 1754) for the direct and indirect dischargers, respectively.

Each of the major assumptions used to develop compliance costs is presented in Section VIII of the General Development Document. However, each subcategory contains a unique set of waste streams requiring certain subcategory-specific assumptions to develop compliance costs. Seven major assumptions are discussed briefly below.

(1) Costs for sulfide precipitation and settle treatment are estimated for those primary lead plants which reported a discharge of acid plant blowdown. However, the costs associated with sulfide precipitation are attributed to the metallurgical acid plant subcategory because the lead smelter contributes only a small portion of the total discharge.

(2) Regulatory flow allowances were developed for three waste streams attributable to industrial hygiene requirements: hand wash, respirator wash water, and laundering of uniforms. These discharges are routed to lime and settle treatment along with other process waste streams unless the data indicated that a plant does not discharge process wastewater. In the latter case, it is assumed the plant can combine industrial hygiene waste streams with process wastewaters and still achieve zero discharge. This assumption is based on the fact that industrial hygiene wastewaters are a small percentage of the overall plant water use. Regulatory flows of industrial hygiene and other waste streams were used for cost estimation if a plant's actual discharge flow was unknown.

(3) Recycle of treated water for use as plant washdown water is accomplished via a 1,000 gallon tank, recycle piping, and a pump.

(4) Because the compliance costs only represent incremental costs that primary lead plants may be expected to incur in complying with this regulation, operation and maintenance costs for in-place treatment used to comply with the 1975 promulgated BPT regulation for this subcategory are not included in a plant's total cost of compliance for this regulation. However, a flow-weighted fraction of the annual cost was retained to represent treatment of the industrial hygiene and washdown flows, which are not covered by the promulgated BPT regulation.

(5) Capital and annual costs for plants discharging wastewater in both the primary lead and metallurgical acid subcategories are attributed to each subcategory on a flow-weighted basis. The entire cost for washdown recycle is attributed to the primary lead subcategory.

(6) No cost is included for direct dischargers to comply with elimination of net precipitation allowances.

(7) Recycle of air pollution control scrubber liquor is based on recycle through holding tanks. Annual costs associated with maintenance and sludge disposal are included in the estimated compliance costs. If a plant currently recycles scrubber liquor, capital costs of the recycle equipment (piping, pumps, and holding tanks) were not included in the compliance costs.

Nonwater Quality Aspects

Nonwater quality impacts specific to the primary lead subcategory, including energy requirements, solid waste and air pollution, are discussed below.

ENERGY REQUIREMENTS

Energy requirements for the three options considered are estimated at 0.13 MW-hr/yr, 0.066 MW-hr/yr, and 1.1 MW-hr/yr for Options A, B, and C respectively. Option B energy requirements decrease over those for Option A because less water is being treated, thus saving energy costs for lime and settle treatment. Option C at a typical primary lead facility represents roughly one percent of the total plant's electrical usage. It is therefore concluded that the energy requirements of the treatment options considered will have no significant impact on total plant energy consumption.

SOLID WASTE

Sludges associated with the primary lead subcategory will necessarily contain additional quantities (and concentrations) of toxic metal pollutants. Wastes generated by primary smelters and refiners are currently exempt from regulation by Act of Congress (Resource Conservation and Recovery Act (RCRA), Section 3001(b)), as interpreted by the Agency. Consequently, sludges generated from treating primary industries' wastewater are not presently subject to regulation as hazardous wastes.

The Agency contends that lime sludges generated in the primary lead subcategory will not be classified as a hazardous waste if a small excess of lime is added during treatment. The metallurgical acid plant subcategory, however, has added sulfide precipitation to the technology basis for BAT. The Agency believes sludge generated through sulfide precipitation (followed by sedimentation) will be classified as hazardous under RCRA because sulfide precipitation leaves metals in a form amenable to leaching. Two primary lead plants operating acid plants are affected by this added technology. The Agency estimates that the plants will generate 56 tons per year of sulfide sludge and require disposal as a hazardous waste. This added cost for disposal was considered in developing compliance costs and in the Economic Analysis (even though the waste is now exempt). Multimedia filtration technology will not result in any significant amount of sludge over that generated from lime precipitation and sulfide precipitation.

Although it is the Agency's view that lime sludges generated as a result of these guidelines are not expected to be hazardous, generators of these wastes must test the waste to determine if the wastes meet any of the characteristics of hazardous waste (see 40 CFR 262.11).

If these wastes should be identified or are listed as hazardous, they will come within the scope of RCRA's "cradle to grave" hazardous waste management program, requiring regulation from the point of generation to point of final disposition. EPA's generator standards would require generators of hazardous nonferrous metals manufacturing wastes to meet containerization, labeling, recordkeeping, and reporting requirements; if plants dispose of hazardous wastes off-site, they would have to prepare a manifest which would track the movement of the wastes from the generator's premises to a permitted off-site treatment storage, or disposal facility. See 40 CFR 262.20 45 FR 33142 (May 19, 1980), as amended at 45 FR 86973 (December 31, 1980). The transporter regulations require transporters of hazardous wastes to comply with the manifest system to assure that the wastes are delivered to a permitted facility. See 40 CFR 263.20 45 FR 33151 (May 19, 1980), as amended at 45 FR 86973 (December 31, 1980). Finally, RCRA regulations establish standards for hazardous waste treatment, storage, and disposal facilities allowed to receive such wastes. See 40 CFR Part 464 46 FR 2802 (January 12, 1981), 47 FR 32274 (July 26, 1982).

Even if these wastes are not identified as hazardous, they still must be disposed of in compliance with the Subtitle D open dumping standards, implementing 4004 of RCRA. See 44 FR 53438 (September 13, 1979). The Agency has calculated as part of the costs for wastewater treatment the cost of hauling and disposing of these wastes. Section VIII of Vol. I presents the costs associated with contract hauling.

AIR POLLUTION

There is no reason to believe that any substantial air pollution problems will result from implementation of chemical precipitation, sedimentation, and multimedia filtration. These technologies transfer pollutants to solid waste and do not involve air stripping or any other physical process likely to transfer pollutants to air. Minor amounts of sulfur may be emitted during sulfide precipitation, and water vapor containing some particulate matter will be released in the drift from the cooling tower systems which are used as the basis for flow reduction in the primary lead subcategory. However, the Agency does not consider this impact to be significant.

TABLE VIII-1

COST OF COMPLIANCE FOR THE PRIMARY LEAD SUBCATEGORY

DIRECT DISCHARGERS

(March, 1982 Dollars)

Option	Proposal Cost		Promulgation Cost	
	Capital Cost	Annnual Cost	Capital Cost	Annual Cost
A	0	0	242000	112000
B	0	0	192000	81600
C	0	0	196000	114000

TABLE VIII-2

COST OF COMPLIANCE FOR THE PRIMARY LEAD SUBCATEGORY

INDIRECT DISCHARGERS

(March, 1982 Dollars)

Option	Proposal Cost		Promulgation Cost	
	Capital Cost	Annnual Cost	Capital Cost	Annual Cost
A	-	-	56900	10600
B	-	-	56900	10600
C	-	-	56900	10600

NOTE: No known indirect dischargers at time of proposal

SECTION IX

BEST PRACTICABLE TECHNOLOGY CURRENTLY AVAILABLE

EPA promulgated BPT effluent limitations for the primary lead subcategory on February 27, 1975 as Subpart G of 40 CFR Part 421. These effluent limitations are based on control technologies dependent on geographical location. For primary lead smelters located in areas of net evaporation, zero discharge of all process wastewater pollutants is required. It was determined that the best practicable control technology currently available for facilities in net evaporation areas is recycle and reuse of wastewater after, as needed, neutralization and settling, and disposal through solar evaporation. The Agency recognized that facilities located in geographic areas of historical net evaporation may experience periods of net precipitation which would inhibit their ability to meet zero discharge of process wastewater pollutants. As such, catastrophic and net monthly precipitation stormwater allowances were promulgated. Plants located in areas of net evaporation under the promulgated BPT are allowed to discharge, during any calendar month, a volume of process water equal to the difference between the precipitation for that month that falls within the wastewater impoundment and the evaporation from the surface of the impoundment for that month. Discharges resulting from net monthly precipitation are subject to concentration-based limitations achievable with lime precipitation and sedimentation technology.

The BPT effluent limitations also contain a catastrophic storm water allowance for plants located in areas of net evaporation. This stormwater exemption states that a volume of process wastewater in excess of the 10-year, 24-hour storm event falling on a wastewater impoundment may be discharged. This discharge is not subject to effluent limitations.

For those facilities located in geographic areas of net precipitation, the best practicable control technology currently available was determined as chemical precipitation and sedimentation. Effluent limitations developed from this technology are mass-based limitations and allow a continuous discharge of process wastewater including discharges from associated acid plants. Pollutant parameters regulated under BAT are cadmium, lead, zinc, pH, and TSS.

However, new information became available to the Agency that supported the need for discharge of wastewater from blast furnace slag granulation, an operation previously considered and included in the promulgated zero discharge regulation. Information obtained in 1975 indicated that slag granulation is a net water consuming operation and, therefore, it did not justify a discharge allowance. Data supplied to the Agency since 1975 show

that one plant uses an ore with a lead content that makes it feasible to recycle blast furnace slag into the sintering machine to recover the remaining lead content. After studying this further, it was found that there may be an accumulation of dissolved salts in recycled slag granulation wastewater. Accumulation of dissolved salts, particularly sodium salts, in the recycle water and ultimately in the recycled slag is detrimental to the sintering process chemistry. For this reason, the promulgated BPT is modified for this subcategory to allow a discharge to prevent the accumulation of solids in slag granulation water circuits. (Refer to the discussions of Wastewater Discharge Rates below and in Section X.)

Additionally, the Agency is modifying its approach to stormwater. The technology basis of the promulgated BPT is not wastewater impoundments or cooling ponds, but rather cooling towers and clarifiers. Hardware of this nature is not as susceptible to fluctuations due to rainfall. Therefore, there is no need for a monthly or catastrophic rainfall allowance.

TECHNICAL APPROACH TO BPT

The Agency studied the nonferrous metals manufacturing category to identify the processes used, the wastewaters generated, and the treatment processes installed. Information was collected from the category using data collection portfolios, and specific plants were sampled and the wastewaters analyzed. Some of the factors which must be considered in establishing effluent limitations based on BPT have already been discussed. The age of equipment and facilities, processes used, and raw materials were taken into account in subcategorization and subdivision and are discussed fully in Section IV. Nonwater quality impacts and energy requirements are considered in Section VIII.

As explained in Section IV, the primary lead subcategory has been subdivided into 12 potential wastewater sources or segments. Since the water use, discharge rates, and pollutant characteristics of each of these wastewaters is potentially unique, effluent limitations will be developed for each of the 12 building blocks.

For each segment, a specific approach was followed for the development of BPT mass limitations. To account for production and flow variability from plant to plant, a unit of production or production normalizing parameter (PNP) was determined for each waste stream which could then be related to the flow from the process to determine a production normalized flow. Selection of the PNP for each process element is discussed in Section IV. Each process within the subcategory was then analyzed to determine (1) whether or not operations included generated wastewater, (2) specific flow rates generated, and (3) the specific production normalized flows for each process. This analysis is discussed in detail in Section V. Nonprocess wastewater such as rainfall runoff and noncontact cooling water is not considered in this analysis.

Normalized flows were analyzed to determine which flow was to be used as part of the basis for BPT mass limitations. The selected flow (sometimes referred to as a BPT regulatory flow or BPT discharge rate) reflects the water use controls which are common practices within the industry. The BPT normalized flow is based on the average of all applicable data. Plants with normalized flows above the average may have to implement some method of flow reduction to achieve the BPT limitations. It is not believed that these modifications would incur any costs for the plants.

For the development of effluent limitations, mass loadings were calculated for each wastewater source. This calculation was made on a stream-by-stream basis, primarily because plants in this category may perform one or more of the operations in various combinations. The mass loadings (milligrams of pollutant per metric ton of production unit - mg/kkg) were calculated by multiplying the BPT normalized flow (l/kkg) by the concentration achievable using the BPT treatment system (mg/l) for each pollutant parameter to be regulated under BPT.

The mass loadings which are allowed under BPT for each plant will be the sum of the individual mass loadings for the various wastewater sources which are found at particular plants. Accordingly, all the wastewater generated within a plant may be combined for treatment in a single or common treatment system, but the effluent limitations for these combined wastewaters are based on the various wastewater sources which actually contribute to the combined flow. This method accounts for the variety of combinations of wastewater sources and production processes which may be found at primary lead plants.

The Agency usually establishes wastewater limitations in terms of mass rather than concentration. This approach prevents the use of dilution as a treatment method (except for controlling pH). The production normalized wastewater flow (l/kkg) is a link between the production operations and the effluent limitations. The pollutant discharge attributable to each operation can be calculated from the normalized flow and effluent concentration achievable by the treatment technology and summed to derive an appropriate limitation for each subcategory.

BPT effluent limitations are based on the average of the discharge flow rates for each source; consequently, the treatment technologies which are currently used by the lowest dischargers will be the treatment technologies most likely required to meet BPT effluent limitations. Section VII discusses the various treatment technologies which are currently in place for each wastewater source. In most cases, the current treatment technologies consist of chemical precipitation and sedimentation (lime and settle technology) and a combination of reuse and recycle to reduce flow.

The overall effectiveness of end-of-pipe treatment for the removal of wastewater pollutants is improved by the application

of water flow controls within the process to limit the volume of wastewater requiring treatment. The controls or in-process technologies recommended under BPT include only those measures which are commonly practiced within the subcategory and which reduce flows to meet the production normalized flow for each operation.

In making technical assessments of data, reviewing manufacturing processes, and assessing wastewater treatment technology options, both indirect and direct dischargers have been considered as a single group. An examination of plants and processes did not indicate any process differences based on the type of discharge, whether it be direct or indirect.

INDUSTRY COST AND POLLUTANT REMOVAL ESTIMATES

In balancing costs in relation to pollutant removal estimates, EPA considers the volume and nature of existing discharges, the volume and nature of discharges expected after application of BPT, the general environmental effects of the pollutants, and the cost and economic impacts of the required pollution control level. The Act does not require or permit consideration of water quality problems attributable to particular point sources or industries, or water quality improvements in particular water quality bodies. Accordingly, water quality considerations were not the basis for selecting the proposed BPT. See Weyerhaeuser Company v. Costle, 590 F.2d 1011 (D.C. Cir. 1978).

The methodology for calculating pollutant removal estimates and plant compliance costs is discussed in Section X. Table X-1 shows the pollutant removal estimates for each treatment option considered for promulgation for the direct dischargers in the primary lead subcategory. Compliance costs for direct dischargers are presented in Table VIII-1 (page 1754).

BPT OPTION SELECTION

EPA proposed mass limitations for the primary lead subcategory to allow a discharge to prevent dissolved solids from accumulating in slag granulation circuits. The technology basis for the promulgated BPT limitations is lime precipitation and sedimentation (Option A). This technology is demonstrated at two plants in the subcategory. (One of the two plants also has end-of-pipe filtration technology.) The promulgated BPT is identical to the technology basis proposed for BPT.

The Agency has also considered additional waste streams identified in comments to the proposed regulation. Data solicited by the Agency after proposal were used to determine a BPT flow allowance for sinter plant materials handling wet air pollution control. This wastewater source is due to compliance with OSHA standards which limit fugitive lead emissions. An additional four building blocks were added for the wastewater sources generated due to industrial hygiene requirements. Based on information and data gathered at two integrated secondary lead

and battery manufacturing plants (which have lead concentrations similar to what one would realistically expect to find in the analogous primary lead wastewaters), the Agency has determined that floor washing, employee hand wash, respirator wash, and employee uniform laundering generate wastewaters sufficiently contaminated with lead to warrant treatment. As discussed below, the Agency is not providing a discharge allowance for one of these wastewater sources (floor washing) because this operation can use recycled treatment plant effluent.

Commenters argued that the treatment performance values used (CMDB) for the lead subcategory are inappropriate for primary lead plants, and submitted long-term treatment performance data from two primary lead plants operating BPT equivalent (i.e., lime and settle) treatment systems. The performance data submitted to the Agency demonstrated that primary lead wastewaters have different characteristics than those wastewaters comprising the Agency's treatment performance data base. The Agency conducted a statistical analysis on the performance data and studied the design and operating characteristics of the treatment systems from which the commenters' data were obtained. The Agency has determined that the performance data from one of the plants are representative of a well-operated treatment system and has used treatment effectiveness concentrations obtained from the data to calculate the primary lead BPT mass limitations. Treatment performance from the other plant was not used due to the lack of equalization before lime and settle treatment.

The Agency is eliminating the allowances for net precipitation catastrophic storms as was done in primary electrolytic copper refining when it was revised in 1980. As explained previously, EPA does not believe this allowance is necessary because of the relatively small surface area impoundments that would be used to comply with these limitations. The Agency does not believe any costs will result from this change. Plants using impoundments for other purposes, such as storm water collection, may need to receive net precipitation allowances from permit authorities on a case-by-case basis.

Implementation of the promulgated BPT limitations will remove from raw wastewater an estimated 3,900 kg/yr of toxic metals and 261,000 kg/yr of TSS. The promulgated BPT will result in an estimated capital cost of $0.260 million (March, 1982 dollars) and an estimated annual cost of $0.116 million (March, 1982 dollars). The best practicable technology selected for the primary lead subcategory is presented in Figure IX-1 (page 1771).

WASTEWATER DISCHARGE RATES

A BPT discharge rate is calculated for each subdivision based on the average of the flows of the existing plants, as determined from analysis of dcp. The discharge rate is used with the achievable treatment concentration to determine BPT effluent limitations. Since the discharge rate may be different for each wastewater source, 12 wastewater sources are discussed below and

summarized in Table IX-1 (page 1765). The discharge rates are normalized on a production basis by relating the amount of wastewater generated to the mass of the intermediate product which is produced by the process associated with the waste stream in question. These production normalizing parameters, or PNP's, are also listed in Table IX-1.

SINTER PLANT MATERIALS HANDLING WET AIR POLLUTION CONTROL

The BPT wastewater discharge allowance for sinter plant materials handling wet air pollution control is 360 l/kkg (86.3 gal/ton) of sinter production. An allowance for this waste stream was not provided at proposal. Comments to the proposed regulation identified this wastewater source as necessary for compliance with OSHA standards which limit fugitive lead emissions. Data solicited by the Agency after proposal show that two plants operate sinter plant materials handling scrubbers. Both plants practice extensive recycle of the scrubber liquor (87 and 92 percent). The BPT discharge allowance is based on the average scrubber discharge from the two plants. Water use and discharge rates are presented in Table V-1 (page 1718).

BLAST FURNACE WET AIR POLLUTION CONTROL

Currently there are no facilities in the primary lead subcategory controlling emissions from a blast furnace with a wet scrubber. Therefore, a discharge allowance is not allocated for this potential source of wastewater.

BLAST FURNACE SLAG GRANULATION

The BPT wastewater discharge allowance for blast furnace slag granulation is 3,730 l/kkg (895 gal/ton) of blast furnace lead bullion produced. Four plants reported a blast furnace slag granulation waste stream. Two plants achieve zero discharge of this waste stream through total reuse. One plant achieves zero discharge of this waste stream through total recycle of water that is not entrained in the slag (water entrained in the slag is transferred to a slag pile). One plant discharges blast furnace slag granulation wastewater. This plant recycles 71 percent of this waste stream. The BPT discharge rate is based on the discharge rate of the single discharging plant. Water use and wastewater discharge rates for blast furnace slag granulation are presented in Section V (Table V-2 page 1718).

DROSS REVERBERATORY SLAG GRANULATION WASTEWATER

The proposed BPT wastewater discharge rate for dross reverberatory furnace granulation wastewater was 3,134 l/kkg (750 gal/ton) of slag, matte, or speiss granulated. Three plants report a dross reverberatory furnace granulation waste stream. The proposed BPT discharge was based on the discharge rate from one of these plants. One plant's discharge rate was reported as 22,887 l/kkg (5,490 gal/ton). This plant's discharge rate was considered too high to use in determining the BPT discharge rate

for dross reverberatory furnace granulation wastewater. A third plant with a dross reverberatory furnace granulation waste stream did not report sufficient dcp information to determine the wastewater discharged from this process.

Plant 290 resubmitted a dcp after the mass limitations were proposed for the primary lead subcategory. Data contained in the new dcp indicate that the discharge from dross reverberatory furnace granulation has been lowered from 22,893 l/kkg to 8,379 l/kkg. EPA omitted the Plant 290 discharge from the calculations for the proposed regulation because it found the water use to be excessive. However, the revised flow does not appear to be excessively high so the Agency has averaged it with the flow for Plant 4502 used at proposal. The revised flow allowance for this operation is 5,757 l/kkg (1,381 gal/ton) of slag, speiss, or matte granulated.

DROSS REVERBERATORY FURNACE WET AIR POLLUTION CONTROL

The BPT wastewater discharge rate for dross reverberatory furnace wet air pollution control is 9,646 l/kkg (2,313 gal/ton) of dross reverberatory furnace production. The BPT discharge rate is based on the discharge rate of the single plant which practices wet air pollution control on its dross reverberatory furnace. This plant does not recycle this wastewater.

ZINC FUMING FURNACE WET AIR POLLUTION CONTROL

The BPT wastewater discharge for zinc fuming furnace wet air pollution control is 426 l/kkg (102 gal/ton) of blast furnace lead bullion produced. This rate is allocated only for plants practicing wet air pollution control for zinc fuming furnaces. The BPT discharge allowance is based on the discharge rate of the single plant that practices wet scrubbing on this process. This plant does not recycle this wastewater.

HARD LEAD REFINING WET AIR POLLUTION CONTROL

The BPT wastewater discharge rate for hard lead refining wet air pollution control is 19,836 l/kkg (4,747 gal/ton) of hard lead produced. This rate is allocated only to plants that practice hard lead refining wet air pollution control. The BPT discharge rate is based on the discharge rate of the single plant reporting this waste stream. This plant does not recycle this wastewater.

HARD LEAD REFINING SLAG GRANULATION

No BPT discharge allowance is provided for hard lead refining slag granulation. Only one plant reports this waste stream. This plant granulates slag from a hard lead refining furnace prior to transferring the slag to a slag pile. EPA believes that this plant can recycle 100 percent of the granulation wastewater since this slag is not returned to the smelter for further processing. Alternatively, it could reuse this wastewater in other plant processes. The Agency received no comments questioning the

requirement of 100 percent recycle or reuse for hard lead refining slag granulation.

FACILITY WASHDOWN

No BPT discharge allowance for facility washdown is provided. Because floor washing does not require potable water, the Agency believes lime and settle treatment effluent can be used to hose down work areas in a lead smelter to control fugitive lead and dust. Compliance costs developed for the subcategory included 6 l/kkg (of lead produced) of facility washdown water in the total plant flow when the clarifier was sized.

EMPLOYEE HAND WASH

Data gathered at an integrated secondary lead-battery manufacturing plant demonstrated that wastewaters generated due to industrial hygiene requirements mandated by OSHA may be sufficiently contaminated with lead to require treatment. Field measurements performed by an EPA representative indicate 1.5 liters (0.4 gallons) of water is used per employee to wash his/her hands. Data taken from the primary lead dcp indicate that approximately 3.6 employees-year are used per pound of lead produced. Assuming each employee washes their hands three times per day, the production normalized water usage for hand wash is approximately 3.3 l/kkg (0.79 gal/ton) of lead produced. This value is selected as the BPT discharge rate.

RESPIRATOR WASH

The Agency estimates approximately 7.34 liters (1.94 gallons) of wastewater is generated to clean a respirator based on actual field measurements. Assuming each employee wears a respirator, it is cleaned each day, and using the 3.6 employees-year/lb of lead factor, the BPT discharge rate is 5.3 l/kkg (1.27 gal/ton) of lead produced.

LAUNDERING OF UNIFORMS

Field samples obtained at two integrated secondary lead smelters and battery manufacturing plants indicate that 21.4 liters (5.66 gallons) of wastewater is generated per uniform washed. If employee uniforms are washed once per day, and a factor of 3.6 employees-year/lb of lead is used, the production normalized BPT discharge rate is 16 l/kkg (3.7 gal/ton) of lead produced.

REGULATED POLLUTANT PARAMETERS

Four pollutant parameters were selected for BPT effluent limitations for the primary lead subcategory. These pollutants and pollutant parameters are present in primary lead wastewaters at concentrations that can be effectively reduced by identified treatment technologies. The following pollutants or pollutant parameters will be limited under BPT:

122. lead
124. zinc
TSS
pH

STORM WATER AND PRECIPITATION ALLOWANCES

The promulgated 1975 BPT effluent limitations include net precipitation and catastrophic storm allowances for facilities located in historical geographic areas of net evaporation. Facilities are allowed a discharge of process wastewater which is equivalent to the volume of precipitation that falls within the wastewater impoundment in excess of that attributable to the 10-year, 24-hour rainfall event, when such event occurs. In addition, facilities are allowed to discharge a volume of process wastewater on a monthly basis that is equal to the net difference between the rainfall falling on the impoundment and the mean evaporation from the pond water surface. This monthly discharge is subject to concentration-based standards, whereas the catastrophic storm is not subject to any effluent limitations.

As discussed in greater detail in Section IX of the General Development Document, the Agency is modifying its approach to storm water. The Agency is promulgating BPT effluent limitations based on lime precipitation and sedimentation, not on large cooling water impoundments. The Agency believes the technology basis of BPT does not require a monthly rainfall and catastrophic storm water allowance.

EFFLUENT LIMITATIONS

The data base used to establish treatment concentrations for the limitations in the promulgated 1975 BPT were based solely on acid plant data. EPA has since gathered a combined metals data base which EPA believed is a superior measure of the performance of lime precipitation and sedimentation on nonferrous metals wastewaters. Treatable concentrations for lime precipitation and sedimentation, as determined from the combined metals data base, are discussed in Section VII of this supplement.

As discussed in the BPT Option Selection, two plants in the primary lead subcategory submitted long term treatment performance data for lime and settle, and lime, settle, and filter after mass limitations were proposed for this subcategory. The Agency analyzed the data statistically for comparison with the combined metals data base. In addition, design and operating parameters for the treatment systems from the two plants were collected through Section 308 authority. The Agency has determined that data from one of the two plants should not be used to establish treatment performance because of design deficiencies. However, the other plant appears to be properly designed and is not meeting the proposed performance for cadmium and lead. Examination of the influent to the treatment system shows a great deal of of lime and settle treatment at this plant and has not identified any plant in this subcategory meeting the

combined metals data base limits with lime and settle treatment. Therefore, treatment performance derived from the submitted data are used in calculating the promulgated BPT effluent limitations. The treatable concentrations (both one-day maximum and monthly average values) are multiplied by the BPT normalized discharge flows summarized in Table IX-1 to calculate the mass of pollutants allowed to be discharged per mass of product. The results of these calculations in milligrams of pollutant per metric ton of product represent the BPT effluent limitations and are presented in Table IX-2 (page 1766) for each individual waste stream.

Table IX-1

BPT WASTEWATER DISCHARGE RATES FOR THE PRIMARY LEAD SUBCATEGORY

Wastewater Stream	BPT Normalized Discharge Rate l/kkg	gal/ton	Production Normalizing Parameter
Sinter Plant Materials Handling Wet Air Pollution Control	360	86	Sinter production
Blast Furnace Wet Air Pollution Control	0	0	
Blast Furnace Slag Granulation	3,730	895	Blast furnace lead bullion produced
Dross Reverberatory Slag Granulation Wastewater	5,757	1,381	Slag, speiss, or matte granulated
Dross Reverberatory Furnace Wet Air Pollution Control	9,646	2,313	Dross reverberatory furnace production
Zinc Fuming Wet Air Pollution Control	426	102	Blast furnace lead bullion produced
Hard Lead Refining Slag Granulation	0	0	
Hard Lead Refining Wet Air Pollution Control	19,836	4,747	Hard lead produced
Facility Washdown	0	0	
Employee Hand Wash	3.3	0.8	Lead bullion produced
Respirator Wash	5.3	1.3	Lead bullion produced
Laundering of Uniforms	16	3.7	Lead bullion produced

TABLE IX-2

BPT EFFLUENT LIMITATIONS FOR THE PRIMARY LEAD SUBCATEGORY

(a) Sinter Plant Materials Handling Wet Air Pollution Control BPT

Pollutant or Pollutant Property	Maximum for Any One Day	Maximum for Monthly Average
Metric Units - mg/kkg of sinter production English Units - lbs/billion lbs of sinter production		
Cadmium	122,400	54,000
*Lead	594.000	270.000
*Zinc	525.000	219.600
*TSS	14,760.000	7,020.000
*pH	Within the range of 7.0 to 10.0 at all times	

(b) Blast Furnace Wet Air Pollution Control BPT

Pollutant or Pollutant Property	Maximum for Any One Day	Maximum for Monthly Average
Metric Units - mg/kkg of blast furnace lead bullion produced English Units - lbs/billion lbs of blast furnace lead bullion produced		
Cadmium	0.000	0.000
*Lead	0.000	0.000
*Zinc	0.000	0.000
*TSS	0.000	0.000
*pH	Within the range of 7.0 to 10.0 at all times	

* Regulated Pollutant

TABLE IX-2 (Continued)

BPT EFFLUENT LIMITATIONS FOR THE PRIMARY LEAD SUBCATEGORY

(c) Blast Furnace Slag Granulation BPT

Pollutant or Pollutant Property	Maximum for Any One Day	Maximum for Monthly Average
Metric Units - mg/kkg of blast furnace lead bullion produced English Units - lbs/billion lbs of blast furnace lead bullion produced		
Cadmium	1,268.000	559.500
*Lead	6,155.000	2,798.000
*Zinc	5,446.000	2,276.000
*TSS	153,000.000	72,740.000
*pH	Within the range of 7.0 to 10.0 at all times	

(d) Dross Reverberatory Slag Granulation BPT

Pollutant or Pollutant Property	Maximum for Any One Day	Maximum for Monthly Average
Metric Units - mg/kkg of slag, matte, or speiss granulated English Units - lbs/billion lbs of slag, matte, or speiss granulated		
Cadmium	1,957.000	863.000
*Lead	9,499.000	4,318.000
*Zinc	8,405.000	3,512.000
*TSS	236,000.000	112,300.000
*pH	Within the range of 7.0 to 10.0 at all times	

* Regulated Pollutant

TABLE IX-2 (Continued)

BPT EFFLUENT LIMITATIONS FOR THE PRIMARY LEAD SUBCATEGORY

(e) Dross Reverberatory Furnace Wet Air Pollution Control BPT

Pollutant or Pollutant Property	Maximum for Any One Day	Maximum for Monthly Average
Metric Units - mg/kkg of dross reverberatory furnace production English Units - lbs/billion lbs of dross reverberatory furnace production		
Cadmium	3,280.000	1,447.000
*Lead	15,920.000	7,235.000
*Zinc	14,080.000	5,884.000
*TSS	395,500.000	188,100.000
*pH	Within the range of 7.0 to 10.0 at all times	

(f) Zinc Fuming Furnace Wet Air Pollution Control BPT

Pollutant or Pollutant Property	Maximum for Any One Day	Maximum for Monthly Average
Metric Units - mg/kkg of blast furnace lead bullion produced English Units - lbs/billion lbs of blast furnace lead bullion produced		
Cadmium	144.800	63.900
*Lead	702.900	319.500
*Zinc	622.000	259.900
*TSS	17,470.000	8,307.000
*pH	Within the range of 7.0 to 10.0 at all times	

* Regulated Pollutant

TABLE IX-2 (Continued)

BPT EFFLUENT LIMITATIONS FOR THE PRIMARY LEAD SUBCATEGORY

(g) Hard Lead Refining Slag Granulation BPT

Pollutant or Pollutant Property	Maximum for Any One Day	Maximum for Monthly Average
Metric Units - mg/kkg of hard lead produced English Units - lbs/billion lbs of hard lead produced		
Cadmium	0.000	0.000
*Lead	0.000	0.000
*Zinc	0.000	0.000
*TSS	0.000	0.000
*pH	Within the range of 7.0 to 10.0 at all times	

(h) Hard Lead Refining Wet Air Pollution Control BPT

Pollutant or Pollutant Property	Maximum for Any One Day	Maximum for Monthly Average
Metric Units - mg/kkg of hard lead produced English Units - lbs/billion lbs of hard lead produced		
Cadmium	6,744.000	2,975.000
*Lead	32,730.000	14,880.000
*Zinc	28,960.000	12,100.000
*TSS	813,300.000	386,800.000
*pH	Within the range of 7.0 to 10.0 at all times	

* Regulated Pollutant

TABLE IX-2 (Continued)

BPT EFFLUENT LIMITATIONS FOR THE PRIMARY LEAD SUBCATEGORY

(i) Facility Washdown BPT

Pollutant or Pollutant Property	Maximum for Any One Day	Maximum for Monthly Average
Metric Units - mg/kkg of lead bullion produced English Units - lbs/billion lbs of lead bullion produced		
Cadmium	0.000	0.000
*Lead	0.000	0.000
*Zinc	0.000	0.000
*TSS	0.000	0.000
*pH	Within the range of 7.0 to 10.0 at all times	

(j) Employee Handwash BPT

Pollutant or Pollutant Property	Maximum for Any One Day	Maximum for Monthly Average
Metric Units - mg/kkg of lead bullion produced English Units - lbs/billion lbs of lead bullion produced		
Cadmium	1.222	0.495
Lead	5.445	2.475
Zinc	4.818	2.013
TSS	135.300	64.350
pH	Within the range of 7.0 to 10.0 at all times	

* Regulated Pollutant

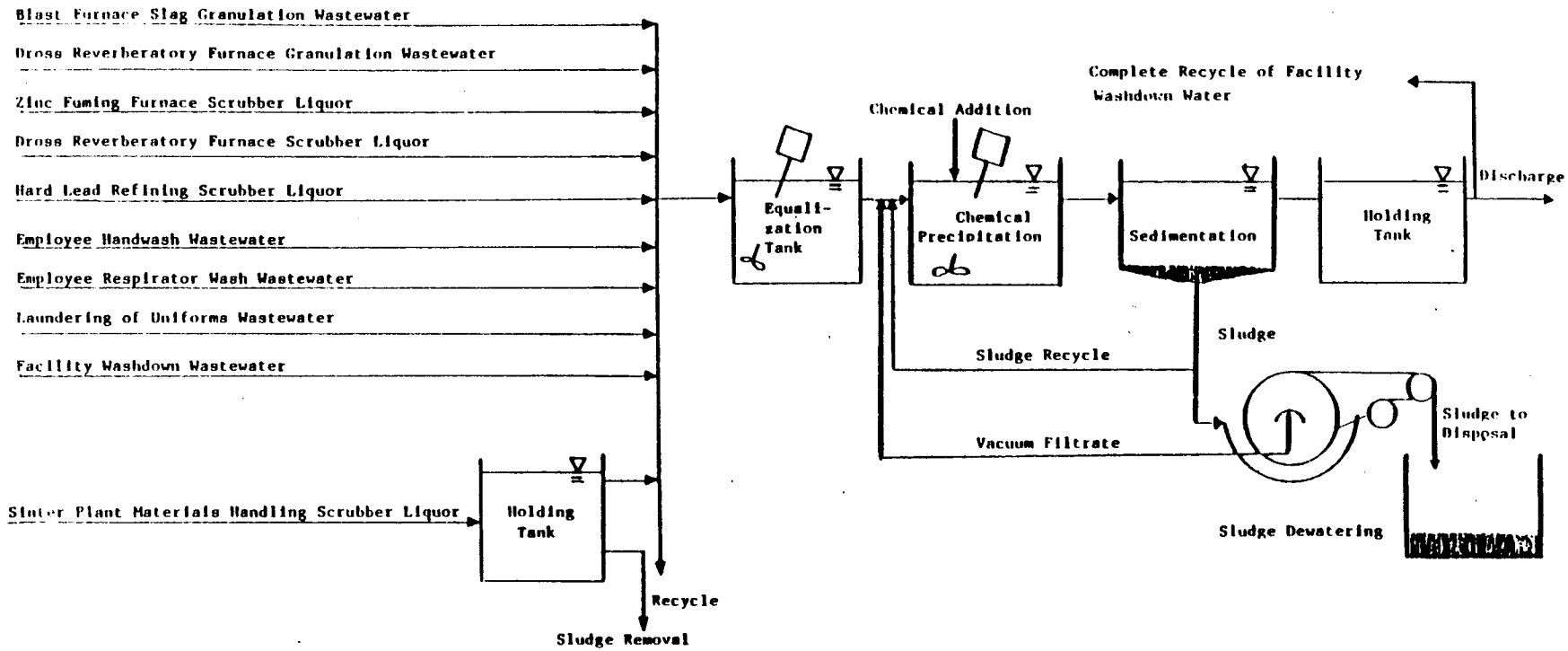

Figure IX-1

BPT TREATMENT SCHEME
PRIMARY LEAD SUBCATEGORY

THIS PAGE INTENTIONALLY LEFT BLANK

SECTION X

BEST AVAILABLE TECHNOLOGY ECONOMICALLY ACHIEVABLE

The effluent limitations are based on the best control and treatment technology used by a specific point source within the industrial category or subcategory, or by another industry where it is readily transferable. Emphasis is placed on additional treatment techniques applied at the end of the treatment systems currently used, as well as reduction of the amount of water used and discharged, process control, and treatment technology optimization.

The factors considered in assessing best available technology economically achievable (BAT) include the age of equipment and facilities involved, the process used, process changes, nonwater quality environmental impacts (including energy requirements), and the costs of application of such technology (Section 304(b)(2)(B) of the Clean Water Act). At a minimum, BAT represents the best available technology economically achievable at plants of various ages, sizes, processes, or other characteristics. Where the Agency has found the existing performance to be uniformly inadequate, BAT may be transferred from a different subcategory or category. BAT may include feasible process changes or internal controls, even when not in common industry practice.

The required assessment of BAT considers costs, but does not require a balancing of costs against effluent reduction benefits (see Weyerhauser v. Costle, 590 F.2d 1011 (D.C. Cir. 1978)). However, in assessing the promulgated BAT, the Agency has given substantial weight to the economic achievability of the technology.

TECHNICAL APPROACH TO BAT

In pursuing this second round of effluent limitations, the Agency reviewed a wide range of technology options and evaluated the available possibilities to ensure that the most effective and beneficial technologies were used as the basis of BAT. To accomplish this, the Agency elected to examine four technology options prior to proposing mass limitations which could be applied to the primary lead subcategory as treatment options for the basis of BAT effluent limitations. Three of the technology options were re-evaluated for the final rule. Based on comments regarding inapplicability of the combined metals data base treatment performance levels, the Agency also evaluated (and developed compliance costs) alternative technology that could be used to achieve these levels.

For the development of BAT effluent limitations, mass loadings were calculated for each wastewater source or subdivision in the subcategory using the same technical approach as in Section IX

for BPT limitations development. The differences in the mass loadings for BPT and BAT are due to increased treatment effectiveness achievable with the more sophisticated BAT treatment technology and reductions in the effluent flows allocated to various waste streams.

In summary, the treatment technologies considered for the primary lead subcategory are:

Option A (Figure X-1, page 1788) is based on:

- o Chemical precipitation (lime) and sedimentation
- o Recycle of treated effluent for facility washdown

Option B (Figure X-2, page 1789) is based on:

- o Chemical precipitation (lime) and sedimentation
- o Flow reduction
- o Recycle of treated effluent for facility washdown

Option C (Figure X-3, page 1790) is based on:

- o Chemical precipitation (lime) and sedimentation
- o Flow reduction
- o Recycle of treated effluent for facility washdown
- o Sulfide precipitation and sedimentation
- o Multimedia filtration

The three technology options examined for BAT are discussed in greater detail below. The first option considered is the same as considered for BPT and presented in the previous section. The last three options each represent substantial progress toward the prevention of polluting the environment above and beyond the progress achievable by BPT.

OPTION A

Option A for the primary lead subcategory is equivalent to the control and treatment technologies selected as the basis for BPT in Section IX. The BPT end-of-pipe treatment scheme includes chemical precipitation and sedimentation (see Figure X-1, page 1788). Additionally treated effluent is partially recycled for use as facility washdown water. The discharge allowances for Option A are equal to the discharge allowances allocated to each stream at BPT.

OPTION B

Option B for the primary lead subcategory achieves lower pollutant discharge by building upon the Option A end-of-pipe treatment technology. Option B consists of lime precipitation, sedimentation, and in-process flow reduction (see Figure X-2, page 1789). Flow reduction measures, including in-process changes, result in the elimination of some wastewater streams and the concentration of pollutants in other effluents. Treatment of

a more concentrated effluent allows achievement of a greater net pollutant removal and introduces the possible economic benefits associated with treating a lower volume of wastewater.

Methods used in Option B to reduce process wastewater generation or discharge rates through flow reduction are discussed below.

Recycle of Water Used in Wet Air Pollution Control

There are three wastewater sources associated with wet air pollution control which are regulated under these effluent limitations:

1. Sinter plant materials handling wet air pollution control,

2. Zinc fuming furnace wet air pollution control,

3. Dross reverberatory furnace wet air pollution control, and

4. Hard lead refining wet air pollution control.

Two plants reported using sinter plant materials handling wet air pollution control. Both plants practice approximately 90 percent recycle.

Only one plant in this subcategory reported the latter three waste streams. This plant does not recycle its scrubber liquor; however, a portion of the scrubber liquor is reused in ore mining and milling operations following treatment.

Recycle or Reuse of Dross Reverberatory Furnace Granulation Wastewater

Three plants in this subcategory reported this waste stream. Recycle or reuse practices of dross reverberatory furnace granulation wastewater were not available from two of the plants. The third plant routes its dross reverberatory furnace granulation wastewater to a blast furnace slag granulation treatment system for treatment followed by recycle or discharge.

OPTION C

Option C for the primary lead subcategory consists of all control and treatment requirements of Option B (lime precipitation, sedimentation, and in-process flow reduction) plus sulfide precipitation, sedimentation, and multimedia filtration technology added at the end of the Option B treatment scheme (see Figure X-3, page 1790). Sulfide precipitation will remove toxic metals to levels otherwise achievable by lime and settle treatment. Multimedia filtration is used to remove suspended solids, including precipitates of toxic metals, beyond the concentration attainable by gravity sedimentation. The filter suggested is of the gravity, mixed media type, although other

filters, such as rapid sand filters or pressure filters, would perform satisfactorily.

INDUSTRY COST AND POLLUTANT REMOVAL ESTIMATES

As a means of evaluating each technology option, EPA developed estimates of the pollutant removals and the compliance costs associated with each option. The methodologies are described below.

POLLUTANT REMOVAL ESTIMATES

A complete description of the methodology used to calculate the estimated pollutant removal, achieved by the application of the various treatment options is presented in Section X of the General Development Document. The pollutant removal estimates have been revised from proposal based on comments and new data. However, the methodology for calculating pollutant removals was not changed. The data used for estimating removals are the same as those used to revise compliance costs.

Sampling data collected during the field sampling program were used to characterize the major waste streams considered for regulation. At each sampled facility, the sampling data were production normalized for each unit operation (i.e., mass of pollutant generated per mass of product manufactured). This value, referred to as the raw waste, was used to estimate the mass of toxic pollutants generated within the primary lead subcategory. By multiplying the total subcategory production for a unit operation by the corresponding raw waste value, the mass of pollutant generated for that unit operation was estimated.

The volume of wastewater discharged after the application of each treatment option was estimated for each operation at each plant by comparing the actual discharge to the regulatory flow. The smaller of the two values was selected and summed with the other plant flows. The mass of pollutant discharged was then estimated by multiplying the achievable concentration values attainable by the option (mg/l) by the estimated volume of process wastewater discharged by the subcategory. The mass of pollutant removed is the difference between the estimated mass of pollutant generated within the subcategory and the mass of pollutant discharged after application of the treatment option. The pollutant removal estimates for the direct dischargers in the primary lead subcategory are presented in Table X-1 (page 1788).

COMPLIANCE COSTS

Compliance costs presented at proposal were estimated using cost curves, which related the total costs associated with installation and operation of wastewater treatment technologies to plant process wastewater discharge. EPA applied these curves on a per plant basis, a plant's costs -- both capital, and operating and maintenance -- being determined by what treatment it has in place and by its individual process wastewater

discharge (from dcp). The final step was to annualize the capital costs, and to sum the annualized capital costs, and the operating and maintenance costs, yielding the cost of compliance for the subcategory.

Since proposal, the cost estimation methodology has been changed as discussed in Section VIII of this document. A design model and plant specific information were used to size a wastewater treatment system for each discharging facility. After completion of the design, capital and annual costs were estimated for each unit of the wastewater treatment system. Capital costs were developed from vendor quotes and annual costs were developed from literature. The revised compliance costs are presented in Table VIII-1 (page 1754).

BAT OPTION SELECTION

Lime precipitation, sedimentation, in-process flow reduction, and filtration were selected as the basis for the proposed BAT in this subcategory. Wastewater generated from slag granulation was the only waste stream allocated a flow allowance.

Data submitted through comments, as discussed in Section IX, demonstrated that primary lead plants operating acid plants cannot achieve lime and settle treatment performance of the combined metals data base. If a plant cannot achieve lime and settle performance, it probably could not achieve the incremental removal over lime and settle performance proposed for filtration. However, the Agency believes the addition of sulfide precipitation and sedimentation in conjunction with polishing multimedia filtration will achieve the treatment performance values proposed. The Agency bases this conclusion on the demonstrated performance of this technology and the fact that metal sulfides have a much lower solubility than metal hydroxides. The costs associated with sulfide precipitation are attributed to the metallurgical acid plant subcategory because the primary lead smelter contributes only a small portion of the flow. For those plants only generating wastewater to meet industrial hygiene requirements, the technology basis does not include sulfide precipitation since these waste streams are not so contaminated and variable as to require the additional treatment.

In the final rule, the Agency has moved the proposed flow allowance for the granulating system from blast furnace slag granulation to dross furnace speiss granulation. The Agency made this change so that the plant achieving zero discharge of blast furnace slag granulation would not receive an allowance they do not need, and yet still provide an allowance for the plant that has demonstrated the need for a granulating allowance. The methodology and the basis for revisions of flow allowances discussed for BPT are also applicable for BAT.

EPA estimates that the promulgated BAT limitations will remove 4,700 kg/yr of the toxic metals generated in the subcategory. The

final BAT effluent mass limitations will remove 160 kg/yr of toxic metals over the intermediate BAT option considered, which lacks filtration. Both options are economically achievable. The Agency believes that the incremental removal justifies selection of sulfide precipitation and multimedia filtration as part of BAT model technology. Filtration as an end-of-pipe treatment technology is demonstrated by one facility in the primary lead subcategory. Sulfide precipitation is demonstrated by two plants in the nonferrous metals manufacturing phase I category and at three plants in the phase II portion of this point source category. Estimated capital cost for achieving the promulgated BAT is $0.215 million (March, 1982 dollars) and the estimated annual cost is $0.118 million.

WASTEWATER DISCHARGE RATES

A BAT discharge rate was calculated for each subdivision based upon the flows of the existing plants, as determined from analysis of dcp and data collected through comments and Section 308 requests. The discharge rate is used with the treatment performance concentrations to determine BAT effluent limitations. Since the discharge rate may be different for each wastewater source, separate production normalized discharge rates for each of the 12 wastewater sources were determined and are summarized in Table X-2 (page 1783). The discharge rates are normalized on a production basis by relating the amount of wastewater generated to the mass of the intermediate product which is produced by the process associated with the waste stream in question. These production normalizing parameters (PNP) are also listed in Table X-2.

The promulgated BAT discharge allowances for five waste streams are identical to those promulgated for BPT. BPT, as promulgated, for materials handling wet air pollution control is based on 90 percent recycle. The Agency does not believe any further reduction in flow is justified for BAT based on demonstrated recycle rates. Flow allowances for hand wash, respirator wash, laundering of uniforms, and facility washdown are equal to BPT. A discussion of the other wastewater sources in the primary lead subcategory is presented below.

BLAST FURNACE SLAG GRANULATION

The BAT wastewater discharge allowance proposed for primary lead was developed for discharges resulting only from blast furnace slag granulation. There are four plants that report generating this waste stream with three of the plants recycling or reusing 100 percent of this wastewater. The production normalized discharge for the one discharging facility is 3,730 l/kkg (895 gal/ton) of lead bullion produced. This plant also reported recycling 71 percent of this waste stream. Although the Agency proposed a discharge allowance for this unit operation, we think the allowance more properly belongs to the dross reverberatory furnace building block. A discharge from this process was thought necessary so that blast furnace slag can be recycled to

the sintering machine.

The one discharging plant currently commingles dross reverberatory slag granulation and blast furnace slag granulation wastewater together prior to reuse. Sodium carbonate is used as a fluxing agent in drossing furnace so that when when dross slag is granulated, sodium dissolves in the granulating water and subsequently contaminates the blast furnace slag. It is reported that sodium contaminated slag is detrimental to the sintering process. The plant contends it needs a 150 gpm bleed from the system to prevent sodium contamination. In response to this requirement, a blast furnace slag granulation flow allowance based on the production normalized discharge at this plant was included in the proposed regulation. However, since proposal the Agency has reconsidered this allowance and provided a discharge for dross reverberatory slag granulation based on segregation of the two types of slag granulation water. By changing the flow allowance, the plant described above will still have a slag granulation bleed to reduce sodium, and those plants currently achieving zero discharge of blast furnace slag granulation would not receive an unneeded discharge allowance.

ZINC FUMING FURNACE WET AIR POLLUTION CONTROL

No BAT discharge allowance is provided for zinc fuming furnace wet air pollution control. Of the three plants that have air pollution control on zinc fuming furnaces, two of the plants use dry air pollution control. The BAT discharge rate is based on dry scrubbing or, alternatively, 100 percent reuse or recycle of air pollution scrubber liquor in other plant processes. Possibilities for reuse of this waste stream include blast furnace slag granulation and acid plant scrubber liquor.

DROSS REVERBERATORY FURNACE WET AIR POLLUTION CONTROL

No BAT discharge allowance is provided for dross reverberatory furnace wet air pollution control. Only one plant reported a waste stream associated with dross reverberatory furnace wet air pollution control. The BAT discharge rate is based on dry scrubbing or, alternatively, 100 percent reuse of air pollution scrubber liquor in other plant processes. Possibilities for reuse of this waste stream include blast furnace slag granulation and acid plant scrubber liquor.

DROSS REVERBERATORY SLAG GRANULATION WASTEWATER

A BAT discharge allowance is provided for this waste stream as described in the changes to the proposed blast furnace slag granulation discharge rate. The BAT discharge rate for dross reverberatory furnace slag granulation is equal to BPT, or 5,757 l/kkg (1,381 gal/ton) of slag, speiss, or matte granulated. The Agency believes this discharge rate represents the maximum flow reduction attainable for this process.

HARD LEAD REFINING WET AIR POLLUTION CONTROL

No BAT discharge allowance is provided for hard lead refining wet air pollution control. There were two plants that reported refining hard lead. One of these plants uses a wet scrubber to control emissions during this process, while the other plant reported no air pollution control. The BAT discharge rate is based on dry scrubbing or, alternatively, 100 percent reuse or recycle of air pollution scrubber liquor. Possibilities for reuse of waste stream include blast furnace slag granulation and acid plant scrubber liquor.

REGULATED POLLUTANT PARAMETERS

In implementing the terms of the Consent Agreement in NRDC v. Train, Op. Cit., and 33 U.S.C. (1314(b)(2)(A and B)) (1976), the Agency placed particular emphasis on the toxic pollutants. The raw wastewater concentrations from individual operations and the subcategory as a whole were examined to select certain pollutants and pollutant parameters for consideration for limitation. This examination and evaluation, presented in Section VI, concluded that six pollutants and pollutant parameters are present in primary lead wastewaters at concentrations that can be effectively reduced by identified treatment technologies. (Refer to Section VI).

However, the cost associated with analysis for toxic metal pollutants has prompted EPA to develop an alternative method for regulating and monitoring toxic pollutant discharges from the nonferrous metals manufacturing category. Rather than developing specific effluent mass limitations and standards for each of the toxic metals found in treatable concentrations in the raw waste waters from a given subcategory, the Agency is proposing effluent mass limitations only for those pollutants generated in the greatest quantities as shown by the pollutant reduction benefit analysis. The pollutants selected for specific limitation are listed below:

122. lead
128. zinc

By establishing limitations and standards for certain toxic metal pollutants, dischargers will attain the same degree of control over toxic metal pollutants as they would have been required to achieve had all the toxic metal pollutants been directly limited.

This approach is justified technically since the treatable concentrations used for lime precipitation and sedimentation technology are based on optimized treatment for concomitant multiple metals removal. Thus, even though metals have somewhat different theoretical solubilities, they will be removed at very nearly the same rate in a chemical precipitation and sedimentation treatment system operated for multiple metals removal. Filtration as part of the technology basis is likewise justified because this technology removes metals non-

preferentially.

The following toxic pollutants are excluded from limitation on the basis that they are effectively controlled by the limitations developed for lead and zinc:

116. asbestos
118. cadmium

STORMWATER AND PRECIPITATION ALLOWANCES

The promulgated 1975 BAT effluent limitations include net precipitation and catastrophic storm allowances for facilities located in historical geographic areas of net evaporation. Facilities are allowed a discharge of process wastewater which is equivalent to the volume of precipitation that falls within the wastewater impoundment in excess of that attributable to the 25-year, 24-hour rainfall event, when such event occurs. In addition, facilities are allowed to discnarge a volume of process wastewater on a monthly basis that is equal to the net difference between the rainfall falling on the impoundment and the mean evaporation from the pond water surface. This monthly discharge is subject to concentration-based standards, whereas the catastrophic storm is not subject to any effluent limitations.

The Agency is modifying its approach to stormwater. The Agency is promulgating BAT effluent limitations based on chemical precipitation and sedimentation, not on large cooling water impoundments. The Agency believes the technology basis of BAT does not require a monthly rainfall and catastrophic stormwater allowance.

EFFLUENT LIMITATIONS

The effluent concentrations achievable by the application of the BAT treatment technology are discussed in Section VII of this supplement. The treatable concentrations (both one-day maximum and monthly average values) are multiplied by the BAT normalized discharge flows summarized in Table X-2 to calculate the mass of pollutants allowed to be discharged per mass of product. The results of these calculations in milligrams of pollutant per metric ton of product represent the BAT effluent limitations and are presented in Table X-3 (page 1784) for each individual waste stream.

Table X-1

POLLUTANT REMOVAL ESTIMATES FOR PRIMARY LEAD DIRECT DISCHARGERS

POLLUTANT	TOTAL RAW WASTE (kg/yr)	OPTION A DISCHARGED (kg/yr)	OPTION A REMOVED (kg/yr)	OPTION B DISCHARGED (kg/yr)	OPTION B REMOVED (kg/yr)	OPTION C DISCHARGED (kg/yr)	OPTION C REMOVED (kg/yr)
Arsenic	0.3	0.3	0.0	0.3	0.0	0.3	0.0
Cadmium	0.6	0.6	0.0	0.6	0.0	0.6	0.0
Lead	2,075.9	487.6	1,588.3	154.1	1,921.8	26.8	2,049.1
Zinc	2,686.9	349.8	2,337.1	110.6	2,576.4	77.1	2,609.9
TOTAL TOXIC METALS	4,763.6	838.3	3,925.4	265.5	4,498.1	104.7	4,658.9
TSS	273,850.4	12,720.0	261,130.4	4,020.0	269,830.4	871.0	272,979.4
TOTAL POLLUTANTS	278,614.0	13,558.3	265,055.7	4,285.5	274,328.5	975.7	277,638.3
FLOW (l/yr)		1,060,000,000		335,000,000		335,000,000	

NOTE: TOTAL TOXIC METALS = Arsenic + Cadmium + Lead + Zinc
TOTAL POLLUTANTS = Total Toxic Metals + TSS

OPTION A = Lime Precipitation and Sedimentation
OPTION B = Option A, plus In-process Flow Reduction
OPTION C = Option B, plus Sulfide Precipitation and Sedimentation, and Multimedia Filtration

Table X-2

BAT WASTEWATER DISCHARGE RATES FOR THE PRIMARY LEAD SUBCATEGORY

Wastewater Stream	BAT Normalized Discharge Rate l/kkg	gal/ton	Production Normalizing Parameter
Sinter Plant Materials Handling Wet Air Pollution Control	360	86	Sinter plant production
Blast Furnace Wet Air Pollution Control	0	0	
Blast Furnace Slag Granulation	0	0	
Dross Reverberatory Slag Granulation Wastewater	5,757	1,381	Slag, speiss, or matte granulated
Dross Reverberatory Furnace Wet Air Pollution Control	0	0	
Zinc Fuming Wet Air Pollution Control	0	0	
Hard Lead Refining Slag Granulation	0	0	
Hard Lead Refining Wet Air Pollution Control	0	0	
Facility Washdown	0	0	
Employee Hand Wash	3.3	0.79	Lead bullion produced
Respirator Wash	5.3	1.3	Lead bullion produced
Laundering of Uniforms	16	3.7	Lead bullion produced

TABLE X-3

BAT EFFLUENT LIMITATIONS FOR THE PRIMARY LEAD SUBCATEGORY

(a) Sinter Plant Materials Handling Wet Air Pollution Control BAT

Pollutant or Pollutant Property	Maximum for Any One Day	Maximum for Monthly Average
Metric Units - mg/kkg of sinter production English Units - lbs/billion lbs of sinter production		
Cadmium	72.000	28.800
*Lead	100.800	46.800
*Zinc	367.200	151.200

(b) Blast Furnace Wet Air Pollution Control BAT

Pollutant or Pollutant Property	Maximum for Any One Day	Maximum for Monthly Average
Metric Units - mg/kkg of blast furnace lead bullion produced English Units - lbs/billion lbs of blast furnace lead bullion produced		
Cadmium	0.000	0.000
*Lead	0.000	0.000
*Zinc	0.000	0.000

* Regulated Pollutant

TABLE X-3 (Continued)

BAT EFFLUENT LIMITATIONS FOR THE PRIMARY LEAD SUBCATEGORY

(c) Blast Furnace Slag Granulation BAT

Pollutant or Pollutant Property	Maximum for Any One Day	Maximum for Monthly Average
Metric Units - mg/kkg of blast furnace lead bullion produced English Units - lbs/billion lbs of blast furnace lead bullion produced		
Cadmium	0.000	0.000
*Lead	0.000	0.000
*Zinc	0.000	0.000

(d) Dross Reverberatory Furnace Slag Granulation BAT

Pollutant or Pollutant Property	Maximum for Any One Day	Maximum for Monthly Average
Metric Units - mg/kkg of slag, matte, or speiss granulated English Units - lbs/billion lbs of slag, matte, or speiss granulated		
Cadmium	1,151.000	460.600
*Lead	1,612.000	748.400
*Zinc	5,872.000	2,418.000

* Regulated Pollutant

TABLE X-3 (Continued)

BAT EFFLUENT LIMITATIONS FOR THE PRIMARY LEAD SUBCATEGORY

(e) Dross Reverberatory Furnace Wet Air Pollution Control BAT

Pollutant or Pollutant Property	Maximum for Any One Day	Maximum for Monthly Average
Metric Units - mg/kkg of dross reverberatory furnace production English Units - lbs/billion lbs of dross reverberatory furnace production		
Cadmium	0.000	0.000
*Lead	0.000	0.000
*Zinc	0.000	0.000

(f) Zinc Fuming Furnace Wet Air Pollution Control BAT

Pollutant or Pollutant Property	Maximum for Any One Day	Maximum for Monthly Average
Metric Units - mg/kkg of blast furnace lead bullion produced English Units - lbs/billion lbs of blast furnace lead bullion produced		
Cadmium	0.000	0.000
*Lead	0.000	0.000
*Zinc	0.000	0.000

* Regulated Pollutant

TABLE X-3 (Continued)

BAT EFFLUENT LIMITATIONS FOR THE PRIMARY LEAD SUBCATEGORY

(g) Hard Lead Refining Slag Granulation BAT

Pollutant or Pollutant Property	Maximum for Any One Day	Maximum for Monthly Average
Metric Units - mg/kkg of hard lead produced English Units - lbs/billion lbs of hard lead produced		
Cadmium	0.000	0.000
Lead	0.000	0.000
Zinc	0.000	0.000

(h) Hard Lead Refining Wet Air Pollution Control BAT

Pollutant or Pollutant Property	Maximum for Any One Day	Maximum for Monthly Average
Metric Units - mg/kkg of hard lead produced English Units - lbs/billion lbs of hard lead produced		
Cadmium	0.000	0.000
*Lead	0.000	0.000
*Zinc	0.000	0.000

* Regulated Pollutant

TABLE X-3 (Continued)

BAT EFFLUENT LIMITATIONS FOR THE PRIMARY LEAD SUBCATEGORY

(i) Facility Washdown BAT

Pollutant or Pollutant Property	Maximum for Any One Day	Maximum for Monthly Average
Metric Units - mg/kkg of lead bullion produced English Units - lbs/billion lbs of lead bullion produced		
Cadmium	0.000	0.000
*Lead	0.000	0.000
*Zinc	0.000	0.000

(j) Employee Handwash BAT

Pollutant or Pollutant Property	Maximum for Any One Day	Maximum for Monthly Average
Metric Units - mg/kkg of lead bullion produced English Units - lbs/billion lbs of lead bullion produced		
Cadmium	0.660	0.264
*Lead	0.924	0.429
*Zinc	3.366	1.386

* Regulated Pollutant

TABLE X-3 (Continued)

BAT EFFLUENT LIMITATIONS FOR THE PRIMARY LEAD SUBCATEGORY

(k) Respirator Wash BAT

Pollutant or Pollutant Property	Maximum for Any One Day	Maximum for Monthly Average
Metric Units - mg/kkg of lead bullion produced English Units - lbs/billion lbs of lead bullion produced		
Cadmium	1.060	0.424
*Lead	1.484	0.689
*Zinc	5.406	2.226

(l) Laundering of Uniforms BAT

Pollutant or Pollutant Property	Maximum for Any One Day	Maximum for Monthly Average
Metric Units - mg/kkg of lead bullion produced English Units - lbs/billion lbs of lead bullion produced		
Cadmium	3.200	1.280
*Lead	4.340	2.015
*Zinc	15.810	6.510

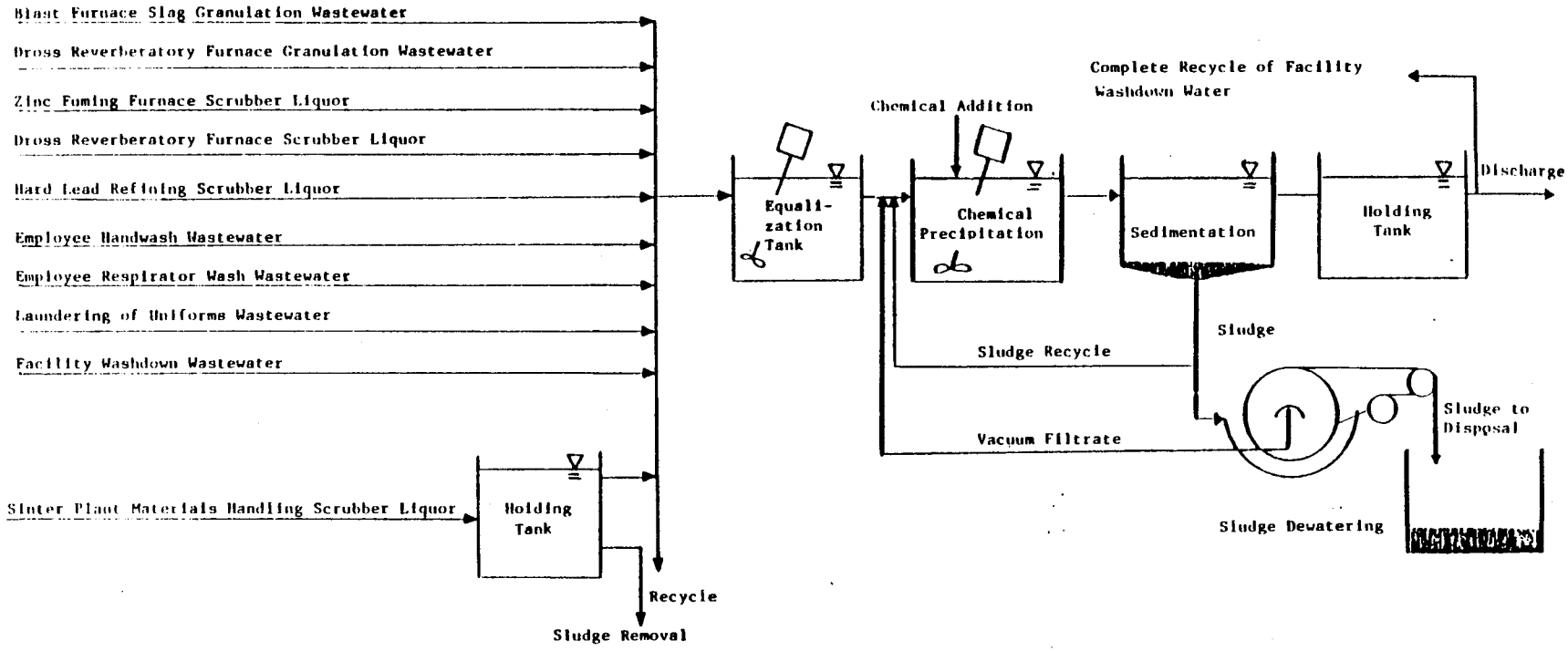

Figure X-1

BAT TREATMENT SCHEME OPTION A
PRIMARY LEAD SUBCATEGORY

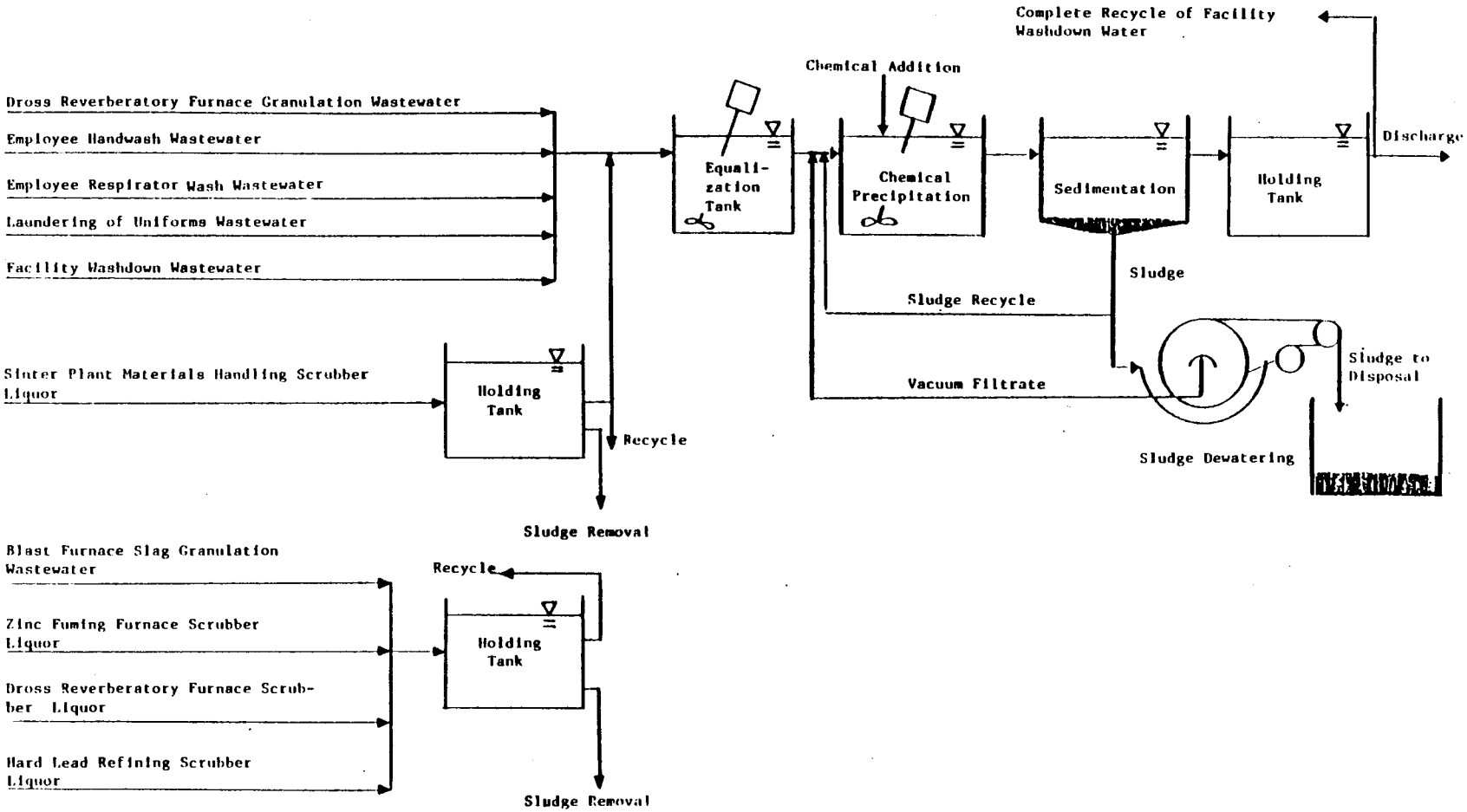

Figure X-2

BAT TREATMENT SCHEME OPTION B
PRIMARY LEAD SUBCATEGORY

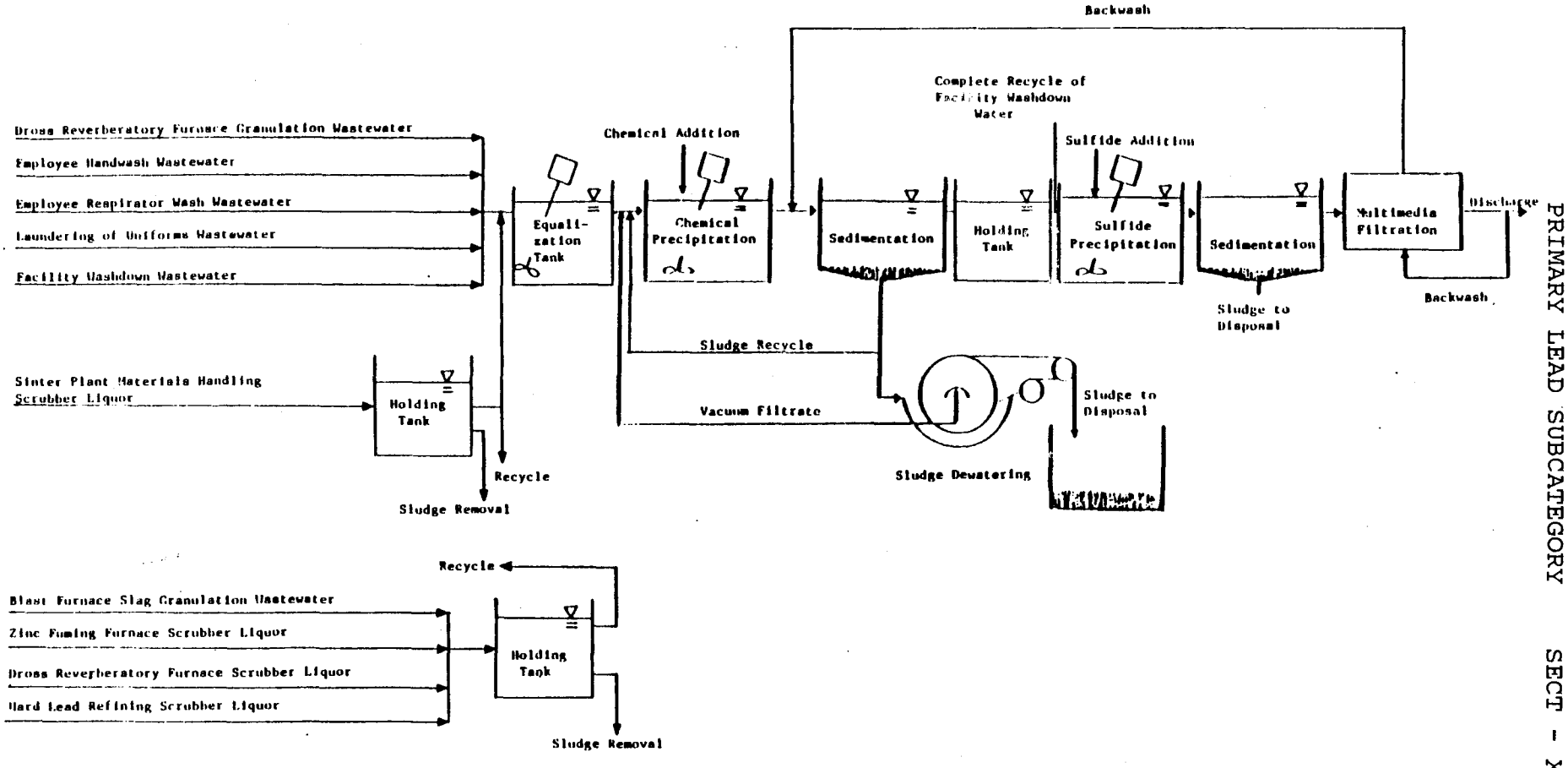

Figure X-3

BAT TREATMENT SCHEME OPTION C
PRIMARY LEAD SUBCATEGORY

SECTION XI

NEW SOURCE PERFORMANCE STANDARDS

The basis for new source performance standards (NSPS) under Section 306 of the Act is the best available demonstrated technology. New plants have the opportunity to design and use the best and most efficient nonferrous metals manufacturing processes and wastewater treatment technologies, without facing the added costs and restrictions encountered in retrofitting an existing plant. Therefore, Congress directed EPA to consider the best demonstrated process changes, in-plant controls, and end-of-pipe treatment technologies which reduce pollution to the maximum extent feasible.

This section describes the control technology for treatment of wastewater from new sources, and presents mass discharge limitations of regulated pollutants for NSPS in the primary lead subcategory, based on the described control technology.

TECHNICAL APPROACH TO BDT

All of the treatment technology options applicable to a new source were previously considered for the BAT options. For this reason, three options were considered for BDT, all identical to BAT Options A, B, and C, which are discussed in Section X. Briefly, the treatment technologies used for the three options are as follows:

OPTION A

- Chemical precipitation and sedimentation
- Partial recycle of treated effluent for facility washdown

OPTION B

- Chemical precipitation and sedimentation
- Partial recycle of treated effluent for facility washdown
- In-process flow reduction

OPTION C

- Chemical precipitation and sedimentation
- Partial recycle of treated effluent for facility washdown
- In-process flow reduction
- Sulfide precipitation and sedimentation
- Multimedia filtration

BDT OPTION SELECTION

The proposed best available demonstrated technology eliminated the discharge of all process wastewater pollutants from primary

lead production. Zero discharge of process wastewater pollutants was based on the complete recycle and reuse of slag granulation wastewater or through slag dumping.

EPA is promulgating NSPS that prohibit the discharge of all process wastewater from primary lead smelting except for those industrial hygiene streams provided an allowance at BAT and for which an allowance remains necessary. The addition of hand wash, respirator wash, and laundering of uniforms wastewater has made this change from proposal necessary. Sinter plant materials handling wet air pollution control has not been provided an allowance based on the use of dry scrubbers. Conversations with industry representatives indicate that dry systems, such as baghouses, can be used just as effectively as wet scrubbers. However, BAT does not require dry scrubbing because of the extensive retrofits required to replace wet scrubbers with dry systems. EPA believes NSPS do not present any barrier to entry for new plants, since no retrofit costs are associated with dry scrubbing. Zero discharge from all other streams can be achieved by the demonstrated complete recycle and reuse of slag granulation wastewater or through slag dumping. The Agency believes new plants can be designed to eliminate discharge from the dross reverberatory furnace slag granulation process at no significant additional cost by 100 percent recycle and reuse of this waste stream. Only two of six primary lead plants currently operating produce dross reverberatory slag granulation wastewater. One of these practices 100 percent reuse in other plant processes.

Comments were received asking that NSPS for the primary lead subcategory be held in reserve because new sources would be built using hydrometallurgical processes instead of the conventional pyrometallurgical processes. The Agency believes that the effluent reductions achievable by pyrometallurgical sources represent Best Demonstrated Technology. New hydrometallurgical processes should therefore have to meet limitations associated with this technology. In fact, there are no existing hydrometallurgical plants and it is not at all clear if there will be any new sources using this process. If such a (hypothetical) facility could demonstrate that it could not achieve better effluent reductions than pyrometallurgical sources, the Agency will consider amending NSPS. However, no such demonstration has been made.

REGULATED POLLUTANT PARAMETERS

The Agency has no reason to believe that the pollutants that will be found in treatable concentrations in processes within new sources will be any different than with existing sources. Accordingly, pollutants and pollutant parameters selected for limitation in Section X are also selected for limitation in NSPS.

NEW SOURCE PERFORMANCE STANDARDS

The NSPS discharge flows for hand wash, respirator wash, and

laundering of uniforms are the same as the BAT discharge rates listed in Section X. The NSPS discharge flows are presented in Table XI-1 (page 1796). The mass of pollutant allowed to be discharged per mass of product is calculated by multiplying the appropriate achievable treatment concentration by the production normalized wastewater discharge flows (l/kkg). The treatment concentrations are discussed in Section VII of this supplement. The results of these calculations are the production-based new source performance standards, and are presented in Table XI-2 (page 1797).

Table XI-1

NSPS WASTEWATER DISCHARGE RATES FOR THE PRIMARY LEAD SUBCATEGORY

Wastewater Stream	NSPS Normalized Discharge Rate l/kkg	gal/ton	Production Normalizing Parameter
Sinter Plant Materials Handling Wet Air Pollution Control	0	0	
Blast Furnace Wet Air Pollution Control	0	0	
Blast Furnace Slag Granulation	0	0	
Dross Reverberatory Slag Granulation Wastewater	0	0	
Dross Reverberatory Furnace Wet Air Pollution Control	0	0	
Zinc Fuming Wet Air Pollution Control	0	0	
Hard Lead Refining Slag Granulation	0	0	
Hard Lead Refining Wet Air Pollution Control	0	0	
Facility Washdown	0	0	
Employee Hand Wash	3.3	0.79	Lead bullion produced
Respirator Wash	5.3	1.3	Lead bullion produced
Laundering of Uniforms	16	3.7	Lead bullion produced

TABLE XI-2

NSPS FOR THE PRIMARY LEAD SUBCATEGORY

(a) Sinter Plant Materials Handling Wet Air Pollution Control NSPS

Pollutant or Pollutant Property	Maximum for Any One Day	Maximum for Monthly Average
Metric Units - mg/kkg of sinter production English Units - lbs/billion lbs of sinter production		
Cadmium	0.000	0.000
*Lead	0.000	0.000
*Zinc	0.000	0.000
*TSS	0.000	0.000
*pH	Within the range of 7.0 to 10.0 at all times	

(b) Blast Furnace Wet Air Pollution Control NSPS

Pollutant or Pollutant Property	Maximum for Any One Day	Maximum for Monthly Average
Metric Units - mg/kkg of blast furnace lead bullion produced English Units - lbs/billion lbs of blast furnace lead bullion produced		
Cadmium	0.000	0.000
*Lead	0.000	0.000
*Zinc	0.000	0.000
*TSS	0.000	0.000
*pH	Within the range of 7.0 to 10.0 at all times	

* Regulated Pollutant

TABLE XI-2 (Continued)

NSPS FOR THE PRIMARY LEAD SUBCATEGORY

(c) Blast Furnace Slag Granulation NSPS

Pollutant or Pollutant Property	Maximum for Any One Day	Maximum for Monthly Average
Metric Units - mg/kkg of blast furnace lead bullion produced English Units - lbs/billion lbs of blast furnace lead bullion produced		
Cadmium	0.000	0.000
*Lead	0.000	0.000
*Zinc	0.000	0.000
*TSS	0.000	0.000
*pH	Within the range of 7.0 to 10.0 at all times	

(d) Dross Reverberatory Slag Granulation NSPS

Pollutant or Pollutant Property	Maximum for Any One Day	Maximum for Monthly Average
Metric Units - mg/kkg of slag, matte, or speiss granulated English Units - lbs/billion lbs of slag, matte, or speiss granulated		
Cadmium	0.000	0.000
*Lead	0.000	0.000
*Zinc	0.000	0.000
*TSS	0.000	0.000
*pH	Within the range of 7.0 to 10.0 at all times	

* Regulated Pollutant

TABLE XI-2 (Continued)

NSPS FOR THE PRIMARY LEAD SUBCATEGORY

(e) Dross Reverberatory Furnace Wet Air Pollution Control NSPS

Pollutant or Pollutant Property	Maximum for Any One Day	Maximum for Monthly Average
Metric Units - mg/kkg of dross reverberatory furnace production English Units - lbs/billion lbs of dross reverberatory furnace production		
Cadmium	0.000	0.000
*Lead	0.000	0.000
*Zinc	0.000	0.000
*TSS	0.000	0.000
*pH	Within the range of 7.0 to 10.0 at all times	

(f) Zinc Fuming Furnace Wet Air Pollution Control NSPS

Pollutant or Pollutant Property	Maximum for Any One Day	Maximum for Monthly Average
Metric Units - mg/kkg of blast furnace lead bullion produced English Units - lbs/billion lbs of blast furnace lead bullion produced		
Cadmium	0.000	0.000
*Lead	0.000	0.000
*Zinc	0.000	0.000
*TSS	0.000	0.000
*pH	Within the range of 7.0 to 10.0 at all times	

* Regulated Pollutant

TABLE XI-2 (Continued)

NSPS FOR THE PRIMARY LEAD SUBCATEGORY

(g) Hard Lead Refining Slag Granulation NSPS

Pollutant or Pollutant Property	Maximum for Any One Day	Maximum for Monthly Average
	Metric Units - mg/kkg of hard lead produced English Units - lbs/billion lbs of hard lead produced	
Cadmium	0.000	0.000
*Lead	0.000	0.000
*Zinc	0.000	0.000
*TSS	0.000	0.000
*pH	Within the range of 7.0 to 10.0 at all times	

(h) Hard Lead Refining Wet Air Pollution Control NSPS

Pollutant or Pollutant Property	Maximum for Any One Day	Maximum for Monthly Average
	Metric Units - mg/kkg of hard lead produced English Units - lbs/billion lbs of hard lead produced	
Cadmium	0.000	0.000
*Lead	0.000	0.000
*Zinc	0.000	0.000
*TSS	0.000	0.000
*pH	Within the range of 7.0 to 10.0 at all times	

* Regulated Pollutant

TABLE XI-2 (Continued)

NSPS FOR THE PRIMARY LEAD SUBCATEGORY

(i) Facility Washdown NSPS

Pollutant or Pollutant Property	Maximum for Any One Day	Maximum for Monthly Average
Metric Units - mg/kkg of lead bullion produced English Units - lbs/billion lbs of lead bullion produced		
Cadmium	0.000	0.000
*Lead	0.000	0.000
*Zinc	0.000	0.000
*TSS	0.000	0.000
*pH	Within the range of 7.0 to 10.0 at all times	

(j) Employee Handwash NSPS

Pollutant or Pollutant Property	Maximum for Any One Day	Maximum for Monthly Average
Metric Units - mg/kkg of lead bullion produced English Units - lbs/billion lbs of lead bullion produced		
Cadmium	0.660	0.264
Lead	0.924	0.429
Zinc	3.366	1.386
TSS	49.500	39.600
pH	Within the range of 7.0 to 10.0 at all times	

* Regulated Pollutant

TABLE XI-2 (Continued)

NSPS FOR THE PRIMARY LEAD SUBCATEGORY

(k) Respirator Wash NSPS

Pollutant or Pollutant Property	Maximum for Any One Day	Maximum for Monthly Average
Metric Units - mg/kkg of lead bullion produced English Units - lbs/billion lbs of lead bullion produced		
Cadmium	1.060	0.424
*Lead	1.484	0.689
*Zinc	5.406	2.226
*TSS	79.500	63.600
*pH	Within the range of 7.0 to 10.0 at all times	

(l) Laundering of Uniforms NSPS

Pollutant or Pollutant Property	Maximum for Any One Day	Maximum for Monthly Average
Metric Units - mg/kkg of lead bullion produced English Units - lbs/billion lbs of lead bullion produced		
Cadmium	3.200	1.280
*Lead	4.340	2.015
*Zinc	15.810	6.510
*TSS	232.500	186.000
*pH	Within the range of 7.0 to 10.0 at all times	

* Regulated Pollutant

SECTION XII

PRETREATMENT STANDARDS

Section 307(b) of the Act requires EPA to promulgate pretreatment standards for existing sources (PSES), which must be achieved within three years of promulgation. PSES are designed to prevent the discharge of pollutants which pass through, interfere with, or are otherwise incompatible with the operation of publicly owned treatment works (POTW). The Clean Water Act of 1977 requires pretreatment for pollutants, such as heavy metals, that limit POTW sludge management alternatives. Section 307(c) of the Act requires EPA to promulgate pretreatment standards for new sources (PSNS) at the same time that it promulgates NSPS. New indirect discharge facilities, like new direct discharge facilities, have the opportunity to incorporate the best available demonstrated technologies, including process changes, in-plant controls, and end-of-pipe treatment technologies, and to use plant site selection to ensure adequate treatment system installation. Pretreatment standards are to be technology-based and analogous to the best available technology for removal of toxic pollutants.

TECHNICAL APPROACH TO PRETREATMENT

Before proposing pretreatment standards, the Agency examines whether the pollutants discharged by the subcategory pass through the POTW or interfere with the POTW operation or its chosen sludge disposal practices. In determining whether pollutants pass through a well-operated POTW achieving secondary treatment, the Agency compares the percentage of a pollutant removed by POTW with the percentage removed by direct dischargers applying the best available technology economically achievable. A pollutant is deemed to pass through the POTW when the average percentage removed nationwide by well-operated POTW meeting secondary treatment requirements, is less than the percentage removed by direct dischargers complying with BAT effluent limitations guidelines for that pollutant. (See generally, 46 Federal Register at 9415-16 (January 28, 1981).)

This definition of pass through satisfies two competing objectives set by Congress: (1) that standards for indirect dischargers be equivalent to standards for direct dischargers, while at the same time, (2) the treatment capability and performance of the POTW be recognized and taken into account in regulating the discharge of pollutants from indirect dischargers. The Agency compares percentage removal rather than the mass or concentration of pollutants discharged because the latter would not take into account the mass of pollutants discharged to the POTW from non-industrial sources nor the dilution of the pollutants in the POTW effluent to lower concentrations due to the addition of large amounts of non-industrial wastewater.

PRETREATMENT STANDARDS FOR EXISTING AND NEW SOURCES

Options for pretreatment of wastewaters are based on increasing the effectiveness of end-of-pipe treatment technologies. All in-plant changes and applicable end-of-pipe treatment processes have been discussed previously in Sections X and XI. The options for PSES and PSNS, therefore, are the same as the BAT options discussed in Section X.

While a more detailed discussion, including pollutants controlled by each treatment process and achievable treatment concentrations are presented in Section VII of Vol. I.

The treatment technology options, presented more fully in Section X, for PSES and PSNS are:

Option A

- Chemical precipitation and sedimentation
- Partial recycle of treated effluent for facility washdown

Option B

- Chemical precipitation and sedimentation
- Partial recycle of treated effluent for facility washdown
- In-process flow reduction

Option C

- Chemical precipitation and sedimentation
- Partial recycle of treated effluent for facility washdown
- In-process flow reduction
- Sulfide precipitation and sedimentation
- Multimedia filtration

INDUSTRY COST AND POLLUTANT REMOVAL ESTIMATES

The methodology applied in calculating pollutant removal estimates and plant compliance costs is discussed in Section X. This methodology for calculating the pollutant removals has been changed slightly for primary lead indirect dischargers. Table XII-1 (page 1807) shows the estimated pollutant removal estimates for indirect dischargers. The primary lead indirect dischargers only discharge hand wash, respirator wash, and laundry wastewater. As explained in Section X, these wastewaters are not as contaminated as the other primary lead wastewaters and acid plant blowdown. The Agency believes it is less expensive to segregate this wastewater and incorporate it into the plant's process water balance, which is already zero discharge. Therefore, in estimating pollutant removals, no process flow is sent through treatment since the wastewater is not discharged. Consequently, the pollutant removal estimates show no discharge of pollutants for indirect dischargers for all three options. Compliance costs are presented in Table VIII-2 (page 1754).

PRETREATMENT STANDARDS FOR EXISTING SOURCES

EPA did not propose pretreatment standards for existing sources for the primary lead subcategory since there were no existing indirect dischargers. However, the addition of hand wash, respirator wash, and laundering of uniforms makes two plants previously considered zero dischargers indirect dischargers. The technology basis for the promulgated PSES is identical to BAT (Option C). Although Option C includes sulfide precipitation, the Agency does not expect the indirect dischargers will need this technology since they only discharge hand wash, respirator wash, and laundry wastewater. As explained for BAT, these wastewaters are not as contaminated as other primary lead waters and acid plant blowdown. In fact, the Agency believes it is less expensive for these plants to segregate this wastewater and incorporate it into the plant's process water balance, which is already zero discharge. These flows are a small percentage (less than five percent) of the process waters, and therefore, their addition will have a negligible effect on the water balance. Therefore, compliance costs are based on segregation and reuse (or evaporation) rather than on treatment. Wastewater discharge allowances are shown in Table XII-2 (page 1808).

Implementation of the promulgated PSES limitations will remove an estimated 117 kg/yr of toxic pollutants over estimated raw discharge. Capital cost for achieving PSES is $0.038 million (March, 1982 dollars) and annual cost is $0.007 million. These costs represent the cost of segregating these waste streams.

PRETREATMENT STANDARDS FOR NEW SOURCES

As with NSPS, EPA is promulgating PSNS that prohibit the discharge of certain process wastewater pollutants from primary lead production. Discharge allowances are provided only for hand wash, respirator wash, and laundering of uniforms wastewater. A zero discharge requirement of granulating process wastewater pollutants is achievable through complete recycle and reuse of slag granulation wastewater or through slag dumping. Zero discharge for sinter plant materials handing air pollution control is based on dry scrubbing. Thus PSNS prevent the pass through of lead and zinc, the toxic pollutants selected for specific limitation under BAT effluent limitations. New sources are not allocated catastrophic rain storm allowances since recycle and reuse of process wastewater is based on cooling towers and clarifiers (if needed), not cooling impoundments. Wastewater discharge allowances for PSNS are presented in Table XII-3 (page 1809).

REGULATED POLLUTANT PARAMETERS

Pollutants selected for limitation, in accordance with the rationale of Sections VI and X, are identical to those selected for limitation for BAT. It is necessary to promulgate PSES and PSNS to prevent the pass-through of lead and zinc, which are the limited pollutants.

PRETREATMENT STANDARDS

Pretreatment standards are based on the treatable concentrations from the selected treatment technology, (Option C), and the discharge rates determined in Section X for BAT. A mass of pollutant per mass of product (mg/kkg) allocation is given for each subdivision within the subcategory. This pollutant allocation is based on the product of the treatable concentration from the proposed treatment (mg/l) and the production normalized wastewater discharge rate (l/kkg). The achievable treatment concentrations for BAT are identical to those for PSES and PSNS. These concentrations are discussed in Section VII of this supplement. PSES and PSNS are presented in Tables XII-4 and XII-5, respectively (pages 1810 and 1816).

Table XII-1

POLLUTANT REMOVAL ESTIMATES FOR PRIMARY LEAD INDIRECT DISCHARGERS

POLLUTANT	TOTAL RAW WASTE (kg/yr)	OPTION A DISCHARGED (kg/yr)	OPTION A REMOVED (kg/yr)	OPTION B DISCHARGED (kg/yr)	OPTION B REMOVED (kg/yr)	OPTION C DISCHARGED (kg/yr)	OPTION C REMOVED (kg/yr)
Arsenic	0.1	0.0	0.1	0.0	0.1	0.0	0.1
Cadmium	0.0	0.0	0.0	0.0	0.0	0.0	0.0
Lead	111.0	0.0	111.0	0.0	111.0	0.0	111.0
Zinc	5.4	0.0	5.4	0.0	5.4	0.0	5.4
TOTAL TOXIC METALS	116.4	0.0	116.5	0.0	116.5	0.0	116.5
TSS	1,380.8	0.0	1,380.8	0.0	1,380.8	0.0	1,380.8
TOTAL POLLUTANTS	1,497.2	0.0	1,497.3	0.0	1,497.3	0.0	1,497.3
FLOW (l/yr)		0		0		0	

NOTE: TOTAL TOXIC METALS = Arsenic + Cadmium + Lead + Zinc
TOTAL POLLUTANTS = Total Toxic Metals + TSS

OPTION A = Lime Precipitation and Sedimentation
OPTION B = Option A, plus In-process Flow Reduction
OPTION C = Option B, plus Sulfide Precipitation and Sedimentation, and Multimedia Filtration

Table XII-2

PSES WASTEWATER DISCHARGE RATES FOR THE PRIMARY LEAD SUBCATEGORY

Wastewater Stream	PSES Normalized Discharge Rate l/kkg	gal/ton	Production Normalizing Parameter
Sinter Plant Materials Handling Wet Air Pollution Control	360	86	Sinter plant production
Blast Furnace Wet Air Pollution Control	0	0	
Blast Furnace Slag Granulation	0	0	
Dross Reverberatory Slag Granulation Wastewater	5,757	1,381	Slag, speiss, or matte granulated
Dross Reverberatory Furnace Wet Air Pollution Control	0	0	
Zinc Fuming Wet Air Pollution Control	0	0	
Hard Lead Refining Slag Granulation	0	0	
Hard Lead Refining Wet Air Pollution Control	0	0	
Facility Washdown	0	0	
Employee Hand Wash	3.3	0.79	Lead bullion produced
Respirator Wash	5.3	1.3	Lead bullion produced
Laundering of Uniforms	16	3.7	Lead bullion produced

Table XII-3

PSNS WASTEWATER DISCHARGE RATES FOR THE PRIMARY LEAD SUBCATEGORY

Wastewater Stream	PSNS Normalized Discharge Rate l/kkg	gal/ton	Production Normalizing Parameter
Sinter Plant Materials Handling Wet Air Pollution Control	0	0	
Blast Furnace Wet Air Pollution Control	0	0	
Blast Furnace Slag Granulation	0	0	
Dross Reverberatory Slag Granulation Wastewater	0	0	
Dross Reverberatory Furnace Wet Air Pollution Control	0	0	
Zinc Fuming Wet Air Pollution Control	0	0	
Hard Lead Refining Slag Granulation	0	0	
Hard Lead Refining Wet Air Pollution Control	0	0	
Facility Washdown	0	0	
Employee Hand Wash	3.3	0.79	Lead bullion produced
Respirator Wash	5.3	1.3	Lead bullion produced
Laundering of Uniforms	16	3.7	Lead bullion produced

TABLE XII-4

PSES FOR THE PRIMARY LEAD SUBCATEGORY

(a) Sinter Plant Materials Handling Wet Air Pollution Control PSES

Pollutant or Pollutant Property	Maximum for Any One Day	Maximum for Monthly Average
Metric Units - mg/kkg of sinter production English Units - lbs/billion lbs of sinter production		
Cadmium	72.000	28.800
*Lead	100.800	46.800
*Zinc	367.200	151.200

(b) Blast Furnace Wet Air Pollution Control PSES

Pollutant or Pollutant Property	Maximum for Any One Day	Maximum for Monthly Average
Metric Units - mg/kkg of blast furnace lead bullion produced English Units - lbs/billion lbs of blast furnace lead bullion produced		
Cadmium	0.000	0.000
*Lead	0.000	0.000
*Zinc	0.000	0.000

* Regulated Pollutant

TABLE XII-4 (Continued)

PSES FOR THE PRIMARY LEAD SUBCATEGORY

(c) Blast Furnace Slag Granulation PSES

Pollutant or Pollutant Property	Maximum for Any One Day	Maximum for Monthly Average
Metric Units - mg/kkg of blast furnace lead bullion produced English Units - lbs/billion lbs of blast furnace lead bullion produced		
Cadmium	0.000	0.000
*Lead	0.000	0.000
*Zinc	0.000	0.000

(d) Dross Reverberatory Slag Granulation PSES

Pollutant or Pollutant Property	Maximum for Any One Day	Maximum for Monthly Average
Metric Units - mg/kkg of slag, matte, or speiss granulated English Units - lbs/billion lbs of slag, matte, or speiss granulated		
Cadmium	1,515.000	460.600
*Lead	1,612.000	748.400
*Zinc	5,872.000	2,418.000

* Regulated Pollutant

TABLE XII-4 (Continued)

PSES FOR THE PRIMARY LEAD SUBCATEGORY

(e) Dross Reverberatory Furnace Wet Air Pollution Control PSES

Pollutant or Pollutant Property	Maximum for Any One Day	Maximum for Monthly Average
Metric Units - mg/kkg of dross reverberatory furnace production English Units - lbs/billion lbs of dross reverberatory furnace production		
Cadmium	0.000	0.000
*Lead	0.000	0.000
*Zinc	0.000	0.000

(f) Zinc Fuming Furnace Wet Air Pollution Control PSES

Pollutant or Pollutant Property	Maximum for Any One Day	Maximum for Monthly Average
Metric Units - mg/kkg of blast furnace lead bullion produced English Units - lbs/billion lbs of blast furnace lead bullion produced		
Cadmium	0.000	0.000
*Lead	0.000	0.000
*Zinc	0.000	0.000

* Regulated Pollutant

TABLE XII-4 (Continued)

PSES FOR THE PRIMARY LEAD SUBCATEGORY

(g) Hard Lead Refining Slag Granulation PSES

Pollutant or Pollutant Property	Maximum for Any One Day	Maximum for Monthly Average
Metric Units - mg/kkg of hard lead produced English Units - lbs/billion lbs of hard lead produced		
Cadmium	0.000	0.000
*Lead	0.000	0.000
*Zinc	0.000	0.000

(h) Hard Lead Refining Wet Air Pollution Control PSES

Pollutant or Pollutant Property	Maximum for Any One Day	Maximum for Monthly Average
Metric Units - mg/kkg of hard lead produced English Units - lbs/billion lbs of hard lead produced		
Cadmium	0.000	0.000
Lead	0.000	0.000
Zinc	0.000	0.000

* Regulated Pollutant

TABLE XII-4 (Continued)

PSES FOR THE PRIMARY LEAD SUBCATEGORY

(i) Facility Washdown PSES

Pollutant or Pollutant Property	Maximum for Any One Day	Maximum for Monthly Average
Metric Units - mg/kkg of lead bullion produced English Units - lbs/billion lbs of lead bullion produced		
Cadmium	0.000	0.000
*Lead	0.000	0.000
*Zinc	0.000	0.000

(j) Employee Handwash PSES

Pollutant or Pollutant Property	Maximum for Any One Day	Maximum for Monthly Average
Metric Units - mg/kkg of lead bullion produced English Units - lbs/billion lbs of lead bullion produced		
Cadmium	0.660	0.264
Lead	0.924	0.429
Zinc	3.366	1.386

* Regulated Pollutant

TABLE XII-4 (Continued)

PSES FOR THE PRIMARY LEAD SUBCATEGORY

(k) Respirator Wash PSES

Pollutant or Pollutant Property	Maximum for Any One Day	Maximum for Monthly Average
Metric Units - mg/kkg of lead bullion produced English Units - lbs/billion lbs of lead bullion produced		
Cadmium	1.060	0.424
Lead	1.484	0.689
Zinc	5.406	2.226

(l) Laundering of Uniforms PSES

Pollutant or Pollutant Property	Maximum for Any One Day	Maximum for Monthly Average
Metric Units - mg/kkg of lead bullion produced English Units - lbs/billion lbs of lead bullion produced		
Cadmium	3.200	1.280
*Lead	4.340	2.015
*Zinc	15.810	6.510

* Regulated Pollutant

TABLE XII-5

PSES FOR THE PRIMARY LEAD SUBCATEGORY

(a) Sinter Plant Materials Handling Wet Air Pollution Control PSNS

Pollutant or Pollutant Property	Maximum for Any One Day	Maximum for Monthly Average
Metric Units - mg/kkg of sinter production English Units - lbs/billion lbs of sinter production		
Cadmium	0.000	0.000
*Lead	0.000	0.000
*Zinc	0.000	0.000

(b) Blast Furnace Wet Air Pollution Control PSNS

Pollutant or Pollutant Property	Maximum for Any One Day	Maximum for Monthly Average
Metric Units - mg/kkg of blast furnace lead bullion produced English Units - lbs/billion lbs of blast furnace lead bullion produced		
Cadmium	0.000	0.000
*Lead	0.000	0.000
*Zinc	0.000	0.000

* Regulated Pollutant

TABLE XII-5 (Continued)

PSES FOR THE PRIMARY LEAD SUBCATEGORY

(c) Blast Furnace Slag Granulation PSNS

Pollutant or Pollutant Property	Maximum for Any One Day	Maximum for Monthly Average
Metric Units - mg/kkg of blast furnace lead bullion produced English Units - lbs/billion lbs of blast furnace lead bullion produced		
Cadmium	0.000	0.000
*Lead	0.000	0.000
*Zinc	0.000	0.000

(d) Dross Reverberatory Slag Granulation PSNS

Pollutant or Pollutant Property	Maximum for Any One Day	Maximum for Monthly Average
Metric Units - mg/kkg of slag, matte, or speiss granulated English Units - lbs/billion lbs of slag, matte, or speiss granulated		
Cadmium	0.000	0.000
*Lead	0.000	0.000
*Zinc	0.000	0.000

* Regulated Pollutant

TABLE XII-5 (Continued)

PSES FOR THE PRIMARY LEAD SUBCATEGORY

(e) Dross Reverberatory Furnace Wet Air Pollution Control PSNS

Pollutant or Pollutant Property	Maximum for Any One Day	Maximum for Monthly Average
Metric Units - mg/kkg of dross reverberatory furnace production English Units - lbs/billion lbs of dross reverberatory furnace production		
Cadmium	0.000	0.000
*Lead	0.000	0.000
*Zinc	0.000	0.000

(f) Zinc Fuming Furnace Wet Air Pollution Control PSNS

Pollutant or Pollutant Property	Maximum for Any One Day	Maximum for Monthly Average
Metric Units - mg/kkg of blast furnace lead bullion produced English Units - lbs/billion lbs of blast furnace lead bullion produced		
Cadmium	0.000	0.00
*Lead	0.000	0.000
*Zinc	0.000	0.000

* Regulated Pollutant

TABLE XII-5 (Continued)

PSES FOR THE PRIMARY LEAD SUBCATEGORY

(g) Hard Lead Refining Slag Granulation PSNS

Pollutant or Pollutant Property	Maximum for Any One Day	Maximum for Monthly Average
Metric Units - mg/kkg of hard lead produced English Units - lbs/billion lbs of hard lead produced		
Cadmium	0.000	0.000
*Lead	0.000	0.000
*Zinc	0.000	0.000

(h) Hard Lead Refining Wet Air Pollution Control PSNS

Pollutant or Pollutant Property	Maximum for Any One Day	Maximum for Monthly Average
Metric Units - mg/kkg of hard lead produced English Units - lbs/billion lbs of hard lead produced		
Cadmium	0.000	0.000
Lead	0.000	0.000
Zinc	0.000	0.000

* Regulated Pollutant

TABLE XII-5 (Continued)

PSES FOR THE PRIMARY LEAD SUBCATEGORY

(i) Facility Washdown PSNS

Pollutant or Pollutant Property	Maximum for Any One Day	Maximum for Monthly Average
Metric Units - mg/kkg of lead bullion produced English Units - lbs/billion lbs of lead bullion produced		
Cadmium	0.000	0.000
*Lead	0.000	0.000
*Zinc	0.000	0.000

(j) Employee Handwash PSNS

Pollutant or Pollutant Property	Maximum for Any One Day	Maximum for Monthly Average
Metric Units - mg/kkg of lead bullion produced English Units - lbs/billion lbs of lead bullion produced		
Cadmium	0.660	0.264
*Lead	0.924	0.429
*Zinc	3.366	1.386

* Regulated Pollutant

TABLE XII-5 (Continued)

PSES FOR THE PRIMARY LEAD SUBCATEGORY

(k) Respirator Wash PSNS

Pollutant or Pollutant Property	Maximum for Any One Day	Maximum for Monthly Average
Metric Units - mg/kkg of lead bullion produced English Units - lbs/billion lbs of lead bullion produced		
Cadmium	1.060	0.424
*Lead	1.484	0.689
*Zinc	5.406	2.226

(l) Laundering of Uniforms PSNS

Pollutant or Pollutant Property	Maximum for Any One Day	Maximum for Monthly Average
Metric Units - mg/kkg of lead bullion produced English Units - lbs/billion lbs of lead bullion produced		
Cadmium	3.200	1.280
*Lead	4.340	2.015
*Zinc	15.810	6.510

* Regulated Pollutant

THIS PAGE INTENTIONALLY LEFT BLANK

SECTION XIII

BEST CONVENTIONAL POLLUTANT CONTROL TECHNOLOGY

EPA is not promulgating best conventional pollutant control technology (BCT) for the primary lead subcategory at this time.

THIS PAGE INTENTIONALLY LEFT BLANK

NONFERROUS METALS MANUFACTURING POINT SOURCE CATEGORY

DEVELOPMENT DOCUMENT SUPPLEMENT

for the

Secondary Lead Subcategory

William K. Reilly
Administrator

Rebecca Hanmer
Acting Assistant Administrator for Water

Martha Prothro, Director
Office of Water Regulations and Standards

Thomas P. O'Farrell, Director
Industrial Technology Division

Ernst P. Hall, P.E., Chief
Metals Industry Branch
and
Technical Project Officer

May 1989

U.S. Environmental Protection Agency
Office of Water
Office of Water Regulations and Standards
Industrial Technology Division
Washington, D. C. 20460

Page Intentionally Blank

SECONDARY LEAD SUBCATEGORY

TABLE OF CONTENTS

Section		Page
I	SUMMARY	1837
II	CONCLUSIONS	1841
III	SUBCATEGORY PROFILE	1861
	Description of Secondary Lead Production	1861
	Raw Materials	1861
	Scrap Pretreatment	1861
	Battery Breaking by Shear or Saw	1861
	Hammer-Mill Battery-Breaking	1862
	Battery Case Classifiers	1862
	Low-Energy Shredders	1862
	Whole Battery Charging	1862
	Lead Paste Desulfurization	1862
	Smelting Operations	1863
	Refining and Casting	1864
	Process Wastewater Sources	1865
	Other Wastewater Sources	1865
	Age, Production and Process Profile	1865
IV	SUBCATEGORIZATION	1873
	Factors Considered in Subdividing the Secondary Lead Subcategory	1873
	Other Factors	1873
	Production Normalizing Parameters	1874
V	WATER USE AND WASTEWATER CHARACTERISTICS	1875
	Wastewater Sources, Discharge Rates, and Characteristics	1876
	Battery Cracking	1879
	Blast, Reverberatory, or Rotary Furnace Wet Air Pollution Control	1879
	Kettle Wet Air Pollution Control	1880
	Lead Paste Desulfurization	1880
	Casting Contact Cooling Water	1880
	Truck Wash	1880
	Facility Washdown	1881
	Battery Case Classification	1881
	Employee Handwash	1881
	Employee Respirator Wash	1881
	Laundering of Uniforms	1882

TABLE OF CONTENTS (Continued)

Section		Page
VI	SELECTION OF POLLUTANTS	1943
	Conventional and Nonconventional Pollutant Parameters	1944
	Conventional and Nonconventional Pollutant Parameters Selected	1944
	Toxic Pollutants	1944
	Toxic Pollutants Never Detected	1945
	Toxic Pollutants Never Found Above Their Analytical Quantification Concentration	1945
	Toxic Pollutants Present Below Concentrations Achievable by Treatment	1945
	Toxic Pollutants Detected in a Small Number of Sources	1945
	Toxic Pollutants Selected for Consideration in Establishing Limitations	1945
VII	CONTROL AND TREATMENT TECHNOLOGIES	1967
	Current Control and Treatment Practices	1959
	Battery Cracking	1959
	Blast, Reverberatory, and Rotary Furnace Wet Air Pollution Control	1960
	Kettle Wet Air Pollution Control	1960
	Lead Paste Desulfurization	1960
	Casting Contact Cooling Water	1960
	Truck Wash	1960
	Facility Washdown	1960
	Battery Case Classification	1962
	Wastewater from Industrial Hygiene Compliance	1962
	Control and Treatment Options	1963
	Option A	1963
	Option B	1964
	Option C	1964
	Control and Treatment Options Rejected	1964
	Option D	1964
	Option F	1964
VIII	COSTS, ENERGY, AND NONWATER QUALITY ASPECTS	1967
	Treatment Options Costed for Existing Sources	1967
	Option A	1967
	Option B	1967
	Option C	1967
	Cost Methodology	1968
	Nonwater Quality Aspects	1969
	Energy Requirements	1970
	Solid Waste	1970
	Air Pollution	1971

TABLE OF CONTENTS (Continued)

Section		Page
IX	BEST PRACTICABLE CONTROL TECHNOLOGY CURRENTLY AVAILABLE	1975
	Technical Approach to BPT	1975
	Industry Cost and Pollutant Removal Estimates	1977
	BPT Options Selection	1978
	Wastewater Discharge Rates	1978
	Battery Cracking	1979
	Blast, Reverberatory, or Rotary Furnace Wet Air Pollution Control	1980
	Kettle Wet Air Pollution Control	1981
	Lead Paste Desulfurization	1981
	Casting Contact Cooling Water	1982
	Truck Wash	1982
	Facility Washdown	1982
	Battery Case Classification	1983
	Employee Handwash	1983
	Employee Respirator Wash	1983
	Laundering of Uniforms	1983
	Regulated Pollutant Parameters	1983
	Effluent Limitations	1984
X	BEST AVAILABLE TECHNOLOGY ECONOMICALLY ACHIEVABLE	1993
	Technical Approach to BAT	1993
	Option A	1994
	Option B	1994
	Recycle of Casting Water Through Cooling Towers	1995
	Option C	1995
	Industry Cost and Pollutant Removal Estimates	1995
	Pollutant Removal Estimates	1995
	Compliance Costs	1996
	BAT Option Selection - Proposal	1996
	BAT Option Selection - Promulgation	1997
	Wastewater Discharge Rates	1998
	Casting Contact Cooling Water	1998
	Regulated Pollutant Parameters	1999
	Effluent Limitations	2000
XI	NEW SOURCE PERFORMANCE STANDARDS	2013
	Technical Approach to BDT	2013
	BDT Option Selection	2014
	Regulated Pollutant Parameters	2014
	New Source Performance Standards	2015

TABLE OF CONTENTS (Continued)

Section		Page
XII	PRETREATMENT STANDARDS	2023
	Technical Approach to Pretreatment	2023
	Pretreatment Standards for Existing Sources and New Sources	2024
	Industry Cost and Pollutant Removal Estimates	2024
	PSES Option Selection	2025
	PSNS Option Selection	2025
	Regulated Pollutant Parameters	2025
	Pretreatment Standards	2026
XIII	BEST CONVENTIONAL POLLUTANT CONTROL TECHNOLOGY	2043

SECONDARY LEAD SUBCATEGORY

LIST OF TABLES

Number		Page
III-1	INITIAL OPERATING YEAR SUMMARY OF PLANTS IN THE SECONDARY LEAD SUBCATEGORY BY DISCHARGE TYPE	1867
III-2	PRODUCTION RANGES FOR THE SECONDARY LEAD SUBCATEGORY	1868
III-3	SUMMARY OF SECONDARY LEAD SUBCATEGORY PROCESSES AND ASSOCIATED WASTE STREAMS	1869
V-1	WATER USE AND DISCHARGE RATES FOR BATTERY CRACKING OPERATIONS	1883
V-2	SECONDARY LEAD SAMPLING DATA BATTERY CRACKING RAW WASTEWATER	1884
V-3	WATER USE AND DISCHARGE RATES FOR BLAST REVERBERATORY FURNACE WET AIR POLLUTION CONTROL	1889
V-4	SECONDARY LEAD SAMPLING DATA BLAST AND REVERBERATORY FURNACE SCRUBBER LIQUOR RAW WASTEWATER	1890
V-5	WATER USE AND DISCHARGE RATES FOR KETTLE WET AIR POLLUTION CONTROL	1894
V-6	SECONDARY LEAD SAMPLING DATA KETTLE SCRUBBER LIQUOR RAW WASTEWATER	1895
V-7	WATER USE AND DISCHARGE RATES FOR CASTING CONTACT COOLING	1896
V-8	WATER USE AND DISCHARGE RATES FOR TRUCK WASH	1896

LIST OF TABLES (Continued)

Number		Page
V-9	SECONDARY LEAD SAMPLING DATA TRUCK WASH RAW WASTEWATER	1897
V-10	WATER USE AND DISCHARGE RATES FOR FACILITY WASHDOWN	1900
V-11	WATER USE AND DISCHARGE RATES FOR BATTERY CASE CLASSIFICATION	1900
V-12	SECONDARY LEAD SAMPLING DATA HAND WASH RAW WASTEWATER	1901
V-13	SECONDARY LEAD SAMPLING DATA RESPIRATOR WASH RAW WASTEWATER	1904
V-14	SECONDARY LEAD WASTEWATER SAMPLING DATA LAUNDRY RAW WASTEWATER	1907
V-15	SECONDARY LEAD WASTEWATER SAMPLING DATA MISCELLANEOUS RAW WASTEWATER	1910
V-16	SECONDARY LEAD WASTEWATER SAMPLING DATA TREATMENT PLANT SAMPLES - PLANT A	1913
V-17	SECONDARY LEAD WASTEWATER SAMPLING DATA TREATMENT PLANT SAMPLES - PLANT B	1917
V-18	SECONDARY LEAD WASTEWATER SAMPLING DATA TREATMENT PLANT SAMPLES - PLANT C	1918

LIST OF TABLES (Continued)

Number		Page
V-19	SECONDARY LEAD WASTEWATER SAMPLING DATA TREATMENT PLANT SAMPLES - PLANT D	1920
V-20	SECONDARY LEAD WASTEWATER SAMPLING DATA TREATMENT PLANT SAMPLES - PLANT E	1922
V-21	SECONDARY LEAD WASTEWATER SAMPLING DATA TREATMENT PLANT SAMPLES - PLANT G	1924
V-22	SECONDARY LEAD WASTEWATER SAMPLING DATA TREATMENT PLANT SAMPLES - PLANT H	1932
VI-1	FREQUENCY OF OCCURRENCE OF TOXIC POLLUTANTS SECONDARY LEAD RAW WASTEWATER	1951
VI-2	TOXIC POLLUTANTS NEVER DETECTED	1955
VI-3	TOXIC POLLUTANTS NEVER FOUND ABOVE THEIR ANALYTICAL QUANTIFICATION CONCENTRATION	1957
VIII-1	COST OF COMPLIANCE FOR THE SECONDARY LEAD SUBCATEGORY, DIRECT DISCHARGERS	1973
VIII-2	COST OF COMPLIANCE FOR THE SECONDARY LEAD SUBCATEGORY, INDIRECT DISCHARGERS	1973
IX-1	BPT WASTEWATER DISCHARGE RATES FOR THE SECONDARY LEAD SUBCATEGORY	1985
IX-2	BPT EFFLUENT LIMITATIONS FOR THE SECONDARY LEAD SUBCATEGORY	1986

LIST OF TABLES (Continued)

Number		Page
X-1	POLLUTANT REMOVAL ESTIMATES FOR SECONDARY LEAD DIRECT DISCHARGERS	2001
X-2	BAT WASTEWATER DISCHARGE RATES FOR THE SECONDARY LEAD SUBCATEGORY	2002
X-3	BAT EFFLUENT LIMITATIONS FOR THE SECONDARY LEAD SUBCATEGORY	2003
XI-1	NSPS WASTEWATER DISCHARGE RATES FOR THE SECONDARY LEAD SUBCATEGORY	2016
XI-2	NSPS FOR THE SECONDARY LEAD SUBCATEGORY	2017
XII-1	POLLUTANT REMOVAL ESTIMATES FOR SECONDARY LEAD INDIRECT DISCHARGERS	2027
XII-2	PSES WASTEWATER DISCHARGE RATES FOR THE SECONDARY LEAD SUBCATEGORY	2028
XII-3	PSNS WASTEWATER DISCHARGE RATES FOR THE SECONDARY LEAD SUBCATEGORY	2029
XII-4	PSES FOR THE SECONDARY LEAD SUBCATEGORY	2030
XII-5	PSNS FOR THE SECONDARY LEAD SUBCATEGORY	2036

LIST OF FIGURES

Number		Page
III-1	SECONDARY LEAD SMELTING PROCESS	1870
III-2	GEOGRAPHIC LOCATIONS OF SECONDARY LEAD SUBCATEGORY PLANTS	1871
V-1	SAMPLING SITES AT SECONDARY LEAD PLANT A	1935
V-2	SAMPLING SITES AT SECONDARY LEAD PLANT B	1936
V-3	SAMPLING SITES AT SECONDARY LEAD PLANT C	1937
V-4	SAMPLING SITES AT SECONDARY LEAD PLANT D	1938
V-5	SAMPLING SITES AT SECONDARY LEAD PLANT E	1939
V-6	SAMPLING SITES AT SECONDARY LEAD PLANT F	1940
V-7	SAMPLING SITES AT SECONDARY LEAD PLANT G	1941
V-8	SAMPLING SITES AT SECONDARY LEAD PLANT H	1942
IX-1	BPT TREATMENT SCHEME FOR THE SECONDARY LEAD SUBCATEGORY	1992
X-1	BAT TREATMENT SCHEME FOR OPTION A	2009
X-2	BAT TREATMENT SCHEME FOR OPTION B	2010
X-3	BAT TREATMENT SCHEME FOR OPTION C	2011

Page Intentionally Blank

SECTION I

SUMMARY

This supplement provides a compilation and analysis of the background material used to develop these secondary lead subcategory effluent limitations and standards. The secondary lead subcategory is comprised of 49 plants. Of the 49 plants, eight discharge directly to rivers, lakes, or streams; 26 discharge to publicly owned treatment works (POTW); and 15 do not discharge process wastewater.

EPA first studied the secondary lead subcategory to determine whether differences in raw materials, final products, manufacturing processes, equipment, age and size of plants, and water usage, required the development of separate effluent limitations and standards for different segments of the subcategory. This involved a detailed analysis of wastewater discharge and treated effluent characteristics, including (1) the processes used (2) the sources and volume of water used, (3) the sources of pollutants and wastewaters in the plant; and (4) the constituents (including toxic pollutants) and volume of wastewaters.

Several distinct control and treatment technologies (both in-plant and end-of-pipe) applicable to the secondary lead subcategory were identified. The Agency analyzed both historical and newly generated data on the performance of these technologies, including their nonwater quality environmental impacts and air quality, solid waste generation, and energy requirements. EPA also studied various flow reduction techniques reported in the data collection portfolios (dcp) and plant visits.

Engineering costs were prepared for each of the control and treatment options considered for the subcategory. These costs were then used by the Agency to estimate the impact of implementing the various options on the subcategory. For each control and treatment option that the Agency found to be most effective and technically feasible in controlling the discharge of pollutants, the number of potential closures, number of employees affected, and impact on price were estimated. These results are reported in a separate document entitled Economic Impact Analysis of Effluent Standards and Limitations for the Nonferrous Smelting and Refining Industry.

Based on consideration of the above factors, EPA identified various control and treatment technologies which formed the basis for BPT and selected control and treatment appropriate for each set of standards and limitations. The mass limitations and standards as promulgated for BPT, BAT, NSPS, PSES, and PSNS are presented in Section II.

After examining the various treatment technologies, the Agency has identified BPT to represent the average of the best existing technology. Metals removal based on lime precipitation and sedimentation is the basis for the BPT limitations. Wastewater discharge rates used in developing BPT effluent limitations represent the average of the subcategory discharge and usage for process wastewater. To meet the BPT effluent limitations based on this technology, the secondary lead subcategory is estimated to incur a capital cost of $1.63 million (1982 dollars) and an annual cost of $1.12 million (1982 dollars).

For BAT, the Agency has built upon the BPT basis of lime precipitation and sedimentation for metals removed by adding in-process control technologies which include recycle of process water from air pollution control and metal contact cooling waste streams. Filtration is added as an effluent polishing step to the end-of-pipe treatment scheme. To meet the BAT effluent limitations, the secondary lead subcategory will incur an estimated capital cost of $1.86 million (1982 dollars) and an annual cost of $1.24 million (1982 dollars).

The best demonstrated technology, BDT, which is the technical basis of NSPS, is equivalent to BAT with additional flow reduction based on dry air pollution control of kettle refining, or alternately, complete recycle of kettle scrubber liquor. In selecting BDT, EPA recognizes that new plants have the opportunity to implement the best and most efficient manufacturing processes and treatment technology.

The Agency selected the same technology for PSES as for BAT. To meet the pretreatment standards for existing sources, the secondary lead subcategory will incur an estimated capital cost of $4.26 million (1982 dollars) and an annual cost of $2.51 million (1978 dollars).

For pretreatment standards for new sources (PSNS), the Agency selected end-of-pipe treatment and in-process flow reduction control techniques equivalent to BDT. As such, the PSNS are identical to the NSPS for all waste streams.

SECTION II

CONCLUSIONS

EPA has divided the secondary lead subcategory into eleven subdivisions or building blocks for the purpose of effluent limitations and standards. These building blocks are:

(a) Battery cracking;
(b) Blast, reverberatory, or rotary furnace wet air pollution control;
(c) Kettle wet air pollution control;
(d) Lead paste desulfurization;
(e) Casting contact cooling;
(f) Truck wash;
(g) Facility washdown;
(h) Battery case classification;
(i) Employee hand wash;
(j) Employee respirator wash; and
(k) Laundering of uniforms.

BPT is promulgated based on the performance achievable by the application of chemical precipitation and sedimentation (lime and settle) technology. The following BPT effluent limitations are promulgated:

(a) Battery Cracking BPT Effluent Limitations

Pollutant or Pollutant Property	Maximum for Any One Day	Maximum for Monthly Average
Metric Units - mg/kg of lead scrap produced English Units - lbs/million lbs of lead scrap produced		
Antimony	1.932	0.862
Arsenic	1.407	0.579
Lead	0.283	0.135
Zinc	0.983	0.411
Ammonia (as N)	0.000	0.000
Total Suspended Solids	27.600	13.130
pH	Within the range of 7.0 to 10.0 at all times	

(b) Blast, Reverberatory, or Rotary Furnace Wet Air Pollution Control BPT Effluent Limitations

Pollutant or Pollutant Property	Maximum for Any One Day	Maximum for Monthly Average
Metric Units - mg/kg of lead produced from smelting English Units - lbs/million lbs of lead produced from smelting		
Antimony	7.491	3.341
Arsenic	5.455	2.245
Lead	1.096	0.522
Zinc	3.811	1.592
Ammonia (as N)	0.000	0.000
Total Suspended Solids	107.000	50.900
pH	Within the range of 7.0 to 10.0 at all times	

(c) Kettle Wet Air Pollution Control BPT

Pollutant or Pollutant Property	Maximum for Any One Day	Maximum for Monthly Average
Metric Units - mg/kg of lead produced from refining English Units - lbs/million lbs of lead produced from refining		
Antimony	0.129	0.058
Arsenic	0.094	0.039
Lead	0.019	0.009
Zinc	0.066	0.027
Ammonia (as N)	0.000	0.000
Total Suspended Solids	1.845	0.878
pH	Within the range of 7.0 to 10.0 at all times	

(d) Lead Paste Desulfurization BPT

Pollutant or Pollutant Property	Maximum for Any One Day	Maximum for Monthly Average
Metric Units - mg/kg of lead processed through desulfurization English Units - lbs/million lbs of lead processed through desulfurization		
Antimony	0.000	0.000
Arsenic	0.000	0.000
Lead	0.000	0.000
Zinc	0.000	0.000
Ammonia (as N)	0.000	0.000
Total Suspended Solids	0.000	0.000
pH	Within the range of 7.0 to 10.0 at all times	

(e) Casting Contact Cooling BPT

Pollutant or Pollutant Property	Maximum for Any One Day	Maximum for Monthly Average
Metric Units - mg/kg of lead cast English Units - lbs/million lbs of lead cast		
Antimony	0.634	0.283
Arsenic	0.462	0.190
Lead	0.093	0.044
Zinc	0.323	0.135
Ammonia (as N)	0.000	0.000
Total Suspended Solids	9.061	4.310
pH	Within the range of 7.0 to 10.0 at all times	

(f) Truck Wash BPT

Pollutant or Pollutant Property	Maximum for Any One Day	Maximum for Monthly Average
Metric Units - mg/kg of lead produced from smelting English Units - lbs/million lbs of lead produced from smelting		
Antimony	0.060	0.027
Arsenic	0.044	0.018
Lead	0.009	0.004
Zinc	0.031	0.013
Ammonia (as N)	0.000	0.000
Total Suspended Solids	0.861	0.410
pH	Within the range of 7.0 to 10.0 at all times	

(g) Facility Washdown BPT

Pollutant or Pollutant Property	Maximum for Any One Day	Maximum for Monthly Average
Metric Units - mg/kg of lead produced from smelting English Units - lbs/million lbs of lead produced from smelting		
Antimony	0.000	0.000
Arsenic	0.000	0.000
Lead	0.000	0.000
Zinc	0.000	0.000
Ammonia (as N)	0.000	0.000
Total Suspended Solids	0.000	0.000
pH	Within the range of 7.0 to 10.0 at all times	

(h) Battery Case Classification BPT

Pollutant or Pollutant Property	Maximum for Any One Day	Maximum for Monthly Average
Metric Units - mg/kg of lead scrap produced English Units - lbs/million lbs of lead scrap produced		
Antimony	0.000	0.000
Arsenic	0.000	0.000
Lead	0.000	0.000
Zinc	0.000	0.000
Ammonia (as N)	0.000	0.000
Total Suspended Solids	0.000	0.000
pH	Within the range of 7.0 to 10.0 at all times	

(i) Employee Handwash BPT

Pollutant or Pollutant Property	Maximum for Any One Day	Maximum for Monthly Average
Metric Units - mg/kg of lead produced from smelting English Units - lbs/million lbs of lead produced from smelting		
Antimony	0.077	0.035
Arsenic	0.056	0.023
Lead	0.011	0.005
Zinc	0.039	0.016
Ammonia (as N)	0.000	0.000
Total Suspended Solids	1.107	0.527
pH	Within the range of 7.0 to 10.0 at all times	

(j) Employee Respirator Wash BPT

Pollutant or Pollutant Property	Maximum for Any One Day	Maximum for Monthly Average
Metric Units - mg/kg of lead produced from smelting English Units - lbs/million lbs of lead produced from smelting		
Antimony	0.126	0.056
Arsenic	0.092	0.038
Lead	0.018	0.009
Zinc	0.064	0.027
Ammonia (as N)	0.000	0.000
Total Suspended Solids	1.804	0.858
pH	Within the range of 7.0 to 10.0 at all times	

(k) Laundering of Uniforms BPT

Pollutant or Pollutant Property	Maximum for Any One Day	Maximum for Monthly Average
Metric Units - mg/kg of lead produced from smelting English Units - lbs/million lbs of lead produced from smelting		
Antimony	0.367	0.164
Arsenic	0.268	0.110
Lead	0.054	0.026
Zinc	0.187	0.078
Ammonia (as N)	0.000	0.000
Total Suspended Solids	5.248	2.496
pH	Within the range of 7.0 to 10.0 at all times	

BAT is promulgated based on the performance achievable by the application of chemical precipitation, sedimentation, and multimedia filtration (lime, settle, and filter) technology and in-process flow reduction control methods. The following BAT effluent limitations are promulgated for existing sources:

(a) Battery Cracking BAT

Pollutant or Pollutant Property	Maximum for Any One Day	Maximum for Monthly Average
Metric Units - mg/kg of lead scrap produced English Units - lbs/million lbs of lead scrap produced		
Antimony	1.299	0.579
Arsenic	0.936	0.384
Lead	0.189	0.087
Zinc	0.687	0.283
Ammonia (as N)	0.000	0.000

(b) Blast, Reverberatory, or Rotary Furnace Wet Air Pollution Control BAT

Pollutant or Pollutant Property	Maximum for Any One Day	Maximum for Monthly Average
Metric Units - mg/kg of lead produced from smelting English Units - lbs/million lbs of lead produced from smelting		
Antimony	5.038	2.245
Arsenic	3.628	1.448
Lead	0.731	0.339
Zinc	2.662	1.096
Ammonia (as N)	0.000	0.000

(c) Kettle Wet Air Pollution Control BAT

Pollutant or Pollutant Property	Maximum for Any One Day	Maximum for Monthly Average
Metric Units - mg/kg of lead produced from refining English Units - lbs/million lbs of lead produced from refining		
Antimony	0.087	0.039
Arsenic	0.063	0.026
Lead	0.136	0.006
Zinc	0.046	0.019
Ammonia (as N)	0.000	0.000

(d) Lead Paste Desulfurization BAT

Pollutant or Pollutant Property	Maximum for Any One Day	Maximum for Monthly Average
Metric Units - mg/kg of lead processed through desulfurization English Units - lbs/million lbs of lead processed through desulfurization		
Antimony	0.000	0.000
Arsenic	0.000	0.000
Lead	0.000	0.000
Zinc	0.000	0.000
Ammonia (as N)	0.000	0.000

(e) Casting Contact Cooling BAT

Pollutant or Pollutant Property	Maximum for Any One Day	Maximum for Monthly Average
Metric Units - mg/kg of lead cast English Units - lbs/million lbs of lead cast		
Antimony	0.042	0.019
Arsenic	0.031	0.013
Lead	0.006	0.003
Zinc	0.022	0.009
Ammonia (as N)	0.000	0.000

(f) Truck Wash BAT

Pollutant or Pollutant Property	Maximum for Any One Day	Maximum for Monthly Average
Metric Units - mg/kg of lead produced from smelting English Units - lbs/million lbs of lead produced from smelting		
Antimony	0.041	0.018
Arsenic	0.029	0.012
Lead	0.006	0.003
Zinc	0.021	0.009
Ammonia (as N)	0.000	0.000

(g) Facility Washdown BAT

Pollutant or Pollutant Property	Maximum for Any One Day	Maximum for Monthly Average
Metric Units - mg/kg of lead produced from smelting English Units - lbs/million lbs of lead produced from smelting		
Antimony	0.000	0.000
Arsenic	0.000	0.000
Lead	0.000	0.000
Zinc	0.000	0.000
Ammonia (as N)	0.000	0.000

(h) Battery Case Classification BAT

Pollutant or Pollutant Property	Maximum for Any One Day	Maximum for Monthly Average
Metric Units - mg/kg of lead scrap produced English Units - lbs/million lbs of lead scrap produced		
Antimony	0.000	0.000
Arsenic	0.000	0.000
Lead	0.000	0.000
Zinc	0.000	0.000
Ammonia (as N)	0.000	0.000

(i) Employee Handwash BAT

Pollutant or Pollutant Property	Maximum for Any One Day	Maximum for Monthly Average
Metric Units - mg/kg of lead produced from smelting English Units - lbs/million lbs of lead produced from smelting		
Antimony	0.052	0.023
Arsenic	0.038	0.015
Lead	0.008	0.004
Zinc	0.028	0.011
Ammonia (as N)	0.000	0.000

(j) Employee Respirator Wash BAT

Pollutant or Pollutant Property	Maximum for Any One Day	Maximum for Monthly Average
Metric Units - mg/kg of lead produced from smelting English Units - lbs/million lbs of lead produced from smelting		
Antimony	0.085	0.038
Arsenic	0.061	0.025
Lead	0.012	0.006
Zinc	0.045	0.018
Ammonia (as N)	0.000	0.000

(k) Laundering of Uniforms BAT

Pollutant or Pollutant Property	Maximum for Any One Day	Maximum for Monthly Average
Metric Units - mg/kg of lead produced from smelting English Units - lbs/million lbs of lead produced from smelting		
Antimony	0.247	0.110
Arsenic	0.178	0.073
Lead	0.036	0.017
Zinc	0.131	0.054
Ammonia (as N)	0.000	0.000

4. NSPS are promulgated based on the performance achievable by the application of chemical precipitation, sedimentation, and multimedia filtration (lime, settle, and filter) technology, in-process flow reduction control methods, and the elimination of pollutant discharged from kettle air pollution control through the use of dry scrubbing methods. The following effluent standards are promulgated for new sources:

(a) Battery Cracking NSPS

Pollutant or Pollutant Property	Maximum for Any One Day	Maximum for Monthly Average
Metric Units - mg/kg of lead scrap produced English Units - lbs/million lbs of lead scrap produced		
Antimony	1.299	0.579
Arsenic	0.936	0.384
Lead	0.189	0.087
Zinc	0.687	0.283
Ammonia (as N)	0.000	0.000
Total Suspended Solids	10.100	8.076
pH	Within the range of 7.0 to 10.0 at all times	

(b) Blast, Reverberatory, or Rotary Furnace Wet Air Pollution Control NSPS

Pollutant or Pollutant Property	Maximum for Any One Day	Maximum for Monthly Average
Metric Units - mg/kg of lead produced from smelting English Units - lbs/million lbs of lead produced from smelting		
Antimony	5.038	2.245
Arsenic	3.268	1.448
Lead	0.731	0.339
Zinc	2.662	1.096
Ammonia (as N)	0.000	0.000
Total Suspended Solids	39.150	31.320
pH	Within the range of 7.0 to 10.0 at all times	

(c) Kettle Wet Air Pollution Control NSPS

Pollutant or Pollutant Property	Maximum for Any One Day	Maximum for Monthly Average
Metric Units - mg/kg of lead produced from refining English Units - lbs/million lbs of lead produced from refining		
Antimony	0.000	0.000
Arsenic	0.000	0.000
Lead	0.000	0.000
Zinc	0.000	0.000
Ammonia (as N)	0.000	0.000
Total Suspended Solids	0.000	0.000
pH	Within the range of 7.0 to 10.0 at all times	

(d) Lead Paste Desulfurization NSPS

Pollutant or Pollutant Property	Maximum for Any One Day	Maximum for Monthly Average
Metric Units - mg/kg of lead processed through desulfurization English Units - lbs/million lbs of lead processed through desulfurization		
Antimony	0.000	0.000
Arsenic	0.000	0.000
Lead	0.000	0.000
Zinc	0.000	0.000
Ammonia (as N)	0.000	0.000
Total Suspended Solids	0.000	0.000
pH	Within the range of 7.0 to 10.0 at all times	

(e) Casting Contact Cooling NSPS

Pollutant or Pollutant Property	Maximum for Any One Day	Maximum for Monthly Average
Metric Units - mg/kg of lead cast English Units - lbs/million lbs of lead cast		
Antimony	0.042	0.019
Arsenic	0.031	0.013
Lead	0.006	0.003
Zinc	0.022	0.009
Ammonia (as N)	0.000	0.000
Total Suspended Solids	0.330	0.264
pH	Within the range of 7.0 to 10.0 at all times	

(f) Truck Wash NSPS

Pollutant or Pollutant Property	Maximum for Any One Day	Maximum for Monthly Average
Metric Units - mg/kg of lead produced from smelting English Units - lbs/million lbs of lead produced from smelting		
Antimony	0.041	0.018
Arsenic	0.029	0.012
Lead	0.006	0.003
Zinc	0.021	0.009
Ammonia (as N)	0.000	0.000
Total Suspended Solids	0.315	0.252
pH	Within the range of 7.0 to 10.0 at all times	

(g) Facility Washdown NSPS

Pollutant or Pollutant Property	Maximum for Any One Day	Maximum for Monthly Average
Metric Units - mg/kg of lead produced from smelting English Units - lbs/million lbs of lead produced from smelting		
Antimony	0.000	0.000
Arsenic	0.000	0.000
Lead	0.000	0.000
Zinc	0.000	0.000
Ammonia (as N)	0.000	0.000
Total Suspended Solids	0.000	0.000
pH	Within the range of 7.0 to 10.0 at all times	

(h) Battery Case Classification NSPS

Pollutant or Pollutant Property	Maximum for Any One Day	Maximum for Monthly Average
Metric Units - mg/kg of lead scrap produced English Units - lbs/million lbs of lead scrap produced		
Antimony	0.000	0.000
Arsenic	0.000	0.000
Lead	0.000	0.000
Zinc	0.000	0.000
Ammonia (as N)	0.000	0.000
Total Suspended Solids	0.000	0.000
pH	Within the range of 7.0 to 10.0 at all times	

(i) Employee Handwash NSPS

Pollutant or Pollutant Property	Maximum for Any One Day	Maximum for Monthly Average
Metric Units - mg/kg of lead produced from smelting English Units - lbs/million lbs of lead produced from smelting		
Antimony	0.052	0.023
Arsenic	0.038	0.015
Lead	0.008	0.004
Zinc	0.028	0.011
Ammonia (as N)	0.000	0.000
Total Suspended Solids	0.405	0.324
pH	Within the range of 7.0 to 10.0 at all times	

(j) Employee Respirator Wash NSPS

Pollutant or Pollutant Property	Maximum for Any One Day	Maximum for Monthly Average
Metric Units - mg/kg of lead produced from smelting English Units - lbs/million lbs of lead produced from smelting		
Antimony	0.085	0.038
Arsenic	0.061	0.025
Lead	0.012	0.006
Zinc	0.045	0.018
Ammonia (as N)	0.000	0.000
Total Suspended Solids	0.660	0.528
pH	Within the range of 7.0 to 10.0 at all times	

(k) Laundering of Uniforms NSPS

Pollutant or Pollutant Property	Maximum for Any One Day	Maximum for Monthly Average
Metric Units - mg/kg of lead produced from smelting English Units - lbs/million lbs of lead produced from smelting		
Antimony	0.247	0.110
Arsenic	0.178	0.073
Lead	0.036	0.017
Zinc	0.131	0.054
Ammonia (as N)	0.000	0.000
Total Suspended Solids	1.920	1.536
pH	Within the range of 7.0 to 10.0 at all times	

PSES is promulgated based on the performance achievable by the application of chemical precipitation, sedimentation, and filtration (lime, settle, and filter) technology and in-process flow reduction control methods. The following pretreatment standards are promulgated.

(a) Battery Cracking PSES

Pollutant or Pollutant Property	Maximum for Any One Day	Maximum for Monthly Average
Metric Units - mg/kg of lead scrap produced English Units - lbs/million lbs of lead scrap produced		
Antimony	1.299	0.579
Arsenic	0.936	0.384
Lead	0.189	0.087
Zinc	0.687	0.283
Ammonia (as N)	0.000	0.000

(b) Blast, Reverberatory, or Rotary Furnace Wet Air Pollution Control PSES

Pollutant or Pollutant Property	Maximum for Any One Day	Maximum for Monthly Average
Metric Units - mg/kg of lead produced from smelting English Units - lbs/million lbs of lead produced from smelting		
Antimony	5.038	2.245
Arsenic	3.268	1.448
Lead	0.731	0.339
Zinc	2.662	1.096
Ammonia (as N)	0.000	0.000

(c) Kettle Wet Air Pollution Control PSES

Pollutant or Pollutant Property	Maximum for Any One Day	Maximum for Monthly Average
Metric Units - mg/kg of lead produced from refining English Units - lbs/million lbs of lead produced from refining		
Antimony	0.087	0.039
Arsenic	0.063	0.026
Lead	0.013	0.006
Zinc	0.046	0.019
Ammonia (as N)	0.000	0.000

(d) Lead Paste Desulfurization PSES

Pollutant or Pollutant Property	Maximum for Any One Day	Maximum for Monthly Average
Metric Units - mg/kg of lead processed through desulfurization English Units - lbs/million lbs of lead processed through desulfurization		
Antimony	0.000	0.000
Arsenic	0.000	0.000
Lead	0.000	0.000
Zinc	0.000	0.000
Ammonia (as N)	0.000	0.000

(e) Casting Contact Cooling PSES

Pollutant or Pollutant Property	Maximum for Any One Day	Maximum for Monthly Average
Metric Units - mg/kg of lead cast English Units - lbs/million lbs of lead cast		
Antimony	0.042	0.019
Arsenic	0.031	0.013
Lead	0.006	0.003
Zinc	0.022	0.009
Ammonia (as N)	0.000	0.000

(f) Truck Wash PSES

Pollutant or Pollutant Property	Maximum for Any One Day	Maximum for Monthly Average
Metric Units - mg/kg of lead produced from smelting English Units - lbs/million lbs of lead produced from smelting		
Antimony	0.041	0.018
Arsenic	0.029	0.012
Lead	0.006	0.003
Zinc	0.021	0.009
Ammonia (as N)	0.000	0.000

(g) Facility Washdown PSES

Pollutant or Pollutant Property	Maximum for Any One Day	Maximum for Monthly Average
Metric Units - mg/kg of lead produced from smelting English Units - lbs/million lbs of lead produced from smelting		
Antimony	0.000	0.000
Arsenic	0.000	0.000
Lead	0.000	0.000
Zinc	0.000	0.000
Ammonia (as N)	0.000	0.000

(h) Battery Case Classification PSES

Pollutant or Pollutant Property	Maximum for Any One Day	Maximum for Monthly Average
Metric Units - mg/kg of lead scrap produced English Units - lbs/million lbs of lead scrap produced		
Antimony	0.000	0.000
Arsenic	0.000	0.000
Lead	0.000	0.000
Zinc	0.000	0.000
Ammonia (as N)	0.000	0.000

(i) Employee Handwash PSES

Pollutant or Pollutant Property	Maximum for Any One Day	Maximum for Monthly Average
Metric Units - mg/kg of lead produced from smelting English Units - lbs/million lbs of lead produced from smelting		
Antimony	0.052	0.023
Arsenic	0.038	0.015
Lead	0.008	0.004
Zinc	0.028	0.011
Ammonia (as N)	0.000	0.000

(j) Employee Respirator Wash PSES

Pollutant or Pollutant Property	Maximum for Any One Day	Maximum for Monthly Average
Metric Units - mg/kg of lead produced from smelting English Units - lbs/million lbs of lead produced from smelting		
Antimony	0.085	0.038
Arsenic	0.061	0.025
Lead	0.012	0.006
Zinc	0.045	0.018
Ammonia (as N)	0.000	0.000

(k) Laundering of Uniforms PSES

Pollutant or Pollutant Property	Maximum for Any One Day	Maximum for Monthly Average
Metric Units - mg/kg of lead produced from smelting English Units - lbs/million lbs of lead produced from smelting		
Antimony	0.247	0.110
Arsenic	0.178	0.073
Lead	0.036	0.017
Zinc	0.131	0.054
Ammonia (as N)	0.000	0.000

PSNS are promulgated based on the performance achievable by the application of chemical precipitation, sedimentation, and multimedia filtration (lime, settle, and filter) technology and in-process flow reduction control methods. The following pretreatment standards are promulgated:

(a) Battery Cracking PSNS

Pollutant or Pollutant Property	Maximum for Any One Day	Maximum for Monthly Average
Metric Units - mg/kg of lead scrap produced English Units - lbs/million lbs of lead scrap produced		
Antimony	1.299	0.579
Arsenic	0.936	0.384
Lead	0.189	0.087
Zinc	0.687	0.283
Ammonia (as N)	0.000	0.000

(b) Blast, Reverberatory, or Rotary Furnace Wet Air Pollution Control PSNS

Pollutant or Pollutant Property	Maximum for Any One Day	Maximum for Monthly Average
Metric Units - mg/kg of lead produced from smelting English Units - lbs/million lbs of lead produced from smelting		
Antimony	5.038	2.245
Arsenic	3.268	1.448
Lead	0.731	0.339
Zinc	2.662	1.096
Ammonia (as N)	0.000	0.000

(c) Kettle Wet Air Pollution Control PSNS

Pollutant or Pollutant Property	Maximum for Any One Day	Maximum for Monthly Average
Metric Units - mg/kg of lead produced from refining English Units - lbs/million lbs of lead produced from refining		
Antimony	0.000	0.000
Arsenic	0.000	0.000
Lead	0.000	0.000
Zinc	0.000	0.000
Ammonia (as N)	0.000	0.000

(d) Lead Paste Desulfurization PSNS

Pollutant or Pollutant Property	Maximum for Any One Day	Maximum for Monthly Average
Metric Units - mg/kg of lead processed through desulfurization English Units - lbs/million lbs of lead processed through desulfurization		
Antimony	0.000	0.000
Arsenic	0.000	0.000
Lead	0.000	0.000
Zinc	0.000	0.000
Ammonia (as N)	0.000	0.000

(e) Casting Contact Cooling PSNS

Pollutant or Pollutant Property	Maximum for Any One Day	Maximum for Monthly Average
Metric Units - mg/kg of lead cast English Units - lbs/million lbs of lead cast		
Antimony	0.042	0.019
Arsenic	0.031	0.013
Lead	0.006	0.003
Zinc	0.022	0.009
Ammonia (as N)	0.000	0.000

(f) Truck Wash PSNS

Pollutant or Pollutant Property	Maximum for Any One Day	Maximum for Monthly Average
Metric Units - mg/kg of lead produced from smelting English Units - lbs/million lbs of lead produced from smelting		
Antimony	0.041	0.018
Arsenic	0.029	0.012
Lead	0.006	0.003
Zinc	0.021	0.009
Ammonia (as N)	0.000	0.000

(g) Facility Washdown PSNS

Pollutant or Pollutant Property	Maximum for Any One Day	Maximum for Monthly Average
Metric Units - mg/kg of lead produced from smelting English Units - lbs/million lbs of lead produced from smelting		
Antimony	0.000	0.000
Arsenic	0.000	0.000
Lead	0.000	0.000
Zinc	0.000	0.000
Ammonia (as N)	0.000	0.000

(h) Battery Case Classification PSNS

Pollutant or Pollutant Property	Maximum for Any One Day	Maximum for Monthly Average
Metric Units - mg/kg of lead scrap produced English Units - lbs/million lbs of lead scrap produced		
Antimony	0.000	0.000
Arsenic	0.000	0.000
Lead	0.000	0.000
Zinc	0.000	0.000
Ammonia (as N)	0.000	0.000

(i) Employee Handwash PSNS

Pollutant or Pollutant Property	Maximum for Any One Day	Maximum for Monthly Average
Metric Units - mg/kg of lead produced from smelting English Units - lbs/million lbs of lead produced from smelting		
Antimony	0.052	0.023
Arsenic	0.038	0.015
Lead	0.008	0.004
Zinc	0.028	0.011
Ammonia (as N)	0.000	0.000

(j) Employee Respirator Wash PSNS

Pollutant or Pollutant Property	Maximum for Any One Day	Maximum for Monthly Average
Metric Units - mg/kg of lead produced from smelting English Units - lbs/million lbs of lead produced from smelting		
Antimony	0.085	0.038
Arsenic	0.061	0.025
Lead	0.012	0.006
Zinc	0.045	0.018
Ammonia (as N)	0.000	0.000

(k) Laundering of Uniforms PSNS

Pollutant or Pollutant Property	Maximum for Any One Day	Maximum for Monthly Average
Metric Units - mg/kg of lead produced from smelting English Units - lbs/million lbs of lead produced from smelting		
Antimony	0.247	0.110
Arsenic	0.178	0.073
Lead	0.036	0.017
Zinc	0.131	0.054
Ammonia (as N)	0.000	0.000

SECTION III

SUBCATEGORY PROFILE

This section of the secondary lead supplement describes the raw materials and processes used in converting lead-bearing scrap to metallic lead and lead-based alloys and presents a profile of the secondary lead plants identified in this study.

DESCRIPTION OF SECONDARY LEAD PRODUCTION

There are three major processes involved in secondary lead production scrap pretreatment, smelting, and refining and casting. Figure III-1 (page 1870) is a block flow diagram depicting the various process steps involved in secondary lead manufacture. The following discussion summarizes the raw materials and the processes used with emphasis on the steps where water may be used. Not all secondary lead plants perform all of the process steps described.

RAW MATERIALS

The principal raw material for secondary lead production is storage battery plates and other scrap reclaimed from discarded batteries. Minor amounts of solder, babbitt, cable coverings, type metal, soft lead, and antimonial lead, as well as drosses and residues generated as a result of operations within the secondary lead plant, are also utilized.

SCRAP PRETREATMENT

The scrap pretreatment process may involve crushing or cutting discarded batteries, crushing of drosses and oversize scrap, and sweating of lead scrap containing other metals. The general crushing operations reduce the pieces of scrap to a suitable size using machinery such as jaw crushers. Sweating involves charging scrap to a furnace where the lead value is separated by selective melting. The molten lead is collected and cast and the residue is removed from the furnace. Reverberatory furnaces are used for this operation. Particulate emissions can be controlled with a baghouse, a scrubber, or both. Preparing discarded batteries for smelting is called battery cracking or breaking and there are a number of different approaches used in battery breaking. The different methods are described below.

Battery Breaking by Shear or Saw

Many smelters dismantle batteries in a hand operation in which employees (1) separate plastic and rubber batteries, (2) cut the top of the battery off, and (3) empty the contents of the battery onto a pile. Typically, front-end loaders then move the battery parts to storage and disposal.

Hammer Mill Battery Breaking

In order to speed up the process, remove employees from exposure and utilize plastic battery cases for fuel or resale, some plants use hammer mills to break batteries. Unfortunately, this approach continues to require hand separation of plastic and rubber cased batteries and manual handling of rubber cased batteries.

Battery Case Classifiers

A number of flotation type battery classifiers are currently used in today's smelters. The technique uses a combination of shears, saws, and hammer mills to reduce battery scrap to small pieces. Battery cases and tops are conveyed directly from the battery breaker to a hammer mill for crushing. The crushed cases and tops are then separated through specific gravity differences in a counter flow flotation system using water. The classifier produces output streams of hard lead (grids and posts), oxide and sulfate sludge, plastic, and rubber. The advantages of this system are (1) positive control of furnace feed enables use of more sophisticated furnaces, e.g., rotary, and (2) separate recycling of plastic case material. Wash water, water for flotation, and a small quantity of battery electrolyte are the sources of wastewater from the battery classifier.

Low-Energy Shredders

At least five secondary smelters have (or have had) low energy shredders installed for breaking batteries. This system uses a low rpm, low energy shredding device to slowly shred batteries into chargeable or separable pieces.

Whole Battery Charging

This technique, developed at the Bergsoe smelter in Denmark, purposely utilizes as little battery breaking as possible (only about 20 percent of the battery mass needs to be broken). The acid is drained from the battery before charging. The unbroken batteries are mixed with other charge materials on concrete beds using a rubber-tired front end loader. After the charge is prepared, it is loaded into the furnace with a front end loader.

The battery cracking operation may be performed either on- or off-site. Spent electrolyte, along with saw or shredder cooling water and wash water, constitutes a major source of wastewater at plants where battery cracking is performed.

Lead Paste Desulfurization

One plant currently operates a patented process to convert lead sulfate to lead oxide. Lead sulfate, in the form of paste or mud, is a product of battery breaking and classification. In this process, lead sulfate is leached with aqueous ammonium carbonate to produce lead carbonate and aqueous ammonium sulfate. The

insoluble lead carbonate is then filtered from the ammonium sulfate solution and calcined to produce lead oxide. Lead oxide is refined to pure or metallic lead (see discussion below). Carbon dioxide evolved during calcination is recovered and reacted with aqueous ammonia to make additional ammonium carbonate solution for the leach step. The filtrate, an ammonium sulfate solution, is sent to a crystallizer or a spray drier to recover solid ammonium sulfate which can be sold as a by-product. Ammonia, carbon dioxide, and water are recovered by absorption and used as makeup for the ammonium carbonate leach solution.

It is reported that since the ammonia and water are recycled within the process, there is no wastewater discharged from lead paste desulfurization. The principal advantage of this process is the reduction of noxious sulfur oxide (SO_x) emissions during smelting, while producing a useful by-product, ammonium sulfate. Removal of sulfur from the lead thus eliminates the need for flue gas desulfurization units in the smelting process.

SMELTING OPERATIONS

The smelting operation takes place in either a reverberatory or a blast furnace. In the reverberatory furnace, heat is radiated from the burner flame and the furnace roof and walls onto the melt. It is usually one of the least expensive furnaces to operate because the flame and hot combustion products come in direct contact with the melt.

Reverberatory smelting partially purifies and compacts lead scrap and paste. The charge to the furnace can be untreated scrap (where the sweating and smelting operations are combined), treated scrap, or a mixture of both. The process steps for this operation are: (1) charging the scrap to the furnace, (2) melting the scrap, (3) allowing the slag to rise to the surface of the metal, (4) tapping the slag as feed for the blast furnace, and (5) tapping the molten lead. The product lead can then be sent either to the refining and casting operation, cast into semisoft or hard lead (antimonial) ingots, or converted to various forms of lead oxide using kettle (Barton pot) or reverberatory oxidation methods.

The secondary lead blast furnace is a refractory-lined steel cylinder with air ports known as tuyeres located at the bottom, through which air is supplied by a blower. Coke, used as fuel, is placed in the shaft in alternating layers along with scrap, slag, and limestone (a flux). One of the most important control variables is the addition rate of combustion air through the tuyeres. Preheating the combustion air may increase the efficiency of the furnace.

The product of the blast furnace is semisoft or hard lead produced from pretreated scrap, reverberatory slag, and recycled blast furnace slag (rerun slag). A typical charge for the blast furnace is composed of 4.5 percent rerun slag, 4.5 percent scrap cast iron, 3.0 percent limestone, 5.5 percent coke, which serves

both as a fuel and as a reducing agent, and 82.5 percent lead oxides, drosses, scrap, and reverberatory slags obtained from other smelting and refining operations.

Emissions from reverberatory and blast furnaces are usually controlled with baghouses, although wet scrubbers may be used. Most secondary lead plants which practice wet scrubbing of furnace emissions utilize some degree of recycle of the scrubbing liquor.

REFINING AND CASTING

Softening, alloying, and refining processes take place in kettle furnaces which are larger versions of pot furnaces. Kettles may be cylindrical or rectangular in shape and are normally used to melt metals with melting points below 760°C. They are usually poured by tilting, dipping, or pumping. These large pot or kettle furnaces may have many small burners along all sides. They are usually natural gas or oil fired.

The product of the kettle softening and refining process is soft, high purity lead. The process steps involved are (a) charging the preheated kettle furnace with an intermediate semisoft or hard lead obtained from the smelting operation, (b) melting the charge, (c) fluxing and agitating the molten charge, (d) skimming the slag, and (e) pouring and casting the soft lead into ingots.

Fluxes which may be used include sodium hydroxide, sodium nitrate, aluminum, aluminum chloride, sawdust, sulfur, and air. Sodium hydroxide, sodium nitrate, or air may be used to reduce the antimony content. Aluminum reacts preferentially with antimony, copper, and nickel to form drosses, as does sulfur with copper. Adding sawdust to the molten metal forms carbon which produces elemental lead by the reduction of lead oxide. This process is known as dry drossing.

The operating temperatures of refining kettles range between 371 to 482°C. Emissions are normally vented through a baghouse, although wet scrubbing also may be used. Solid wastes, consisting of drosses and skimmings along with baghouse dust, are generally recycled to the blast furnace.

The alloying and refining process utilizes the same type furnace as the kettle softening and refining operation and involves treatment and adjustment of the composition of the lead to produce the desired alloy. Antimony, arsenic, copper, silver, and tin are commonly used for lead alloys.

Cooling of lead or lead alloy castings is usually done with indirect (noncontact) cooling water in closed loop recirculating systems. Contact cooling may also produce a small volume discharge stream.

PROCESS WASTEWATER SOURCES

In summary, the principal generators of wastewater in secondary lead production are:

1. Battery cracking,
2. Furnace wet air pollution control,
3. Kettle wet air pollution control,
4. Lead paste desulfurization,
5. Casting contact cooling water,
6. Truck wash,
7. Facility washdown,
8. Battery case classification,
9. Employee hand wash,
10. Employee respirator wash, and
11. Laundering of uniforms.

OTHER WASTEWATER SOURCES

There are other wastewater streams associated with the production of secondary lead smelters such as stormwater runoff and groundwater seepage. These waste streams are not considered as part of this rulemaking. EPA believes that the flows and pollutant loadings associated with these wastewaters are best handled by the appropriate permit authority on a case-by-case basis under the authority of Section 402(a) of the Clean Water Act.

AGE, PRODUCTION, AND PROCESS PROFILE

After the 1983 proposal, EPA became aware of 12 secondary lead plants which were previously not included in the subcategory data base. Additionally, 16 plants closed or have ceased secondary lead production since the initial 1977 dcp survey was conducted.

Figure III-2 (page 1871) shows the location of the 49 secondary lead plants currently operating in the United States. These plants are predominantly located in or near major urban centers where most of the raw materials are readily available. Of the 49 secondary plants shown, 16 plants (33 percent) are located west of the Mississippi River. The remaining 33 plants are located in two bands east of the Mississippi, around the Great Lakes and in the South.

An additional 19 plants remelt or alloy secondary lead. These plants are not considered as part of the secondary lead subcategory. All 19 of these plants achieve zero discharge of waste water.

As seen from Figure III-2 (page 1871), plants discharging to POTW (indirect dischargers) and zero discharge plants (zero dischargers) are found in all areas, while plants discharging directly to receiving waters are found in the East and South.

Table III-1 (page 1867) shows that the median age of secondary lead plants is within a span of 25 to 44 years. Table III-2 (page 1868) shows that, for the 48 plants providing lead production data, only nine produce over 20,000 kkg per year. Most secondary lead plants are relatively small operations; roughly two-thirds produce under 15,000 kkg per year.

Table III-3 (page 1869) provides a summary of the number of plants in the secondary lead industry which utilize the various process operations discussed previously, and the number of plants which generate wastewater associated with each process. All plants practicing battery cracking generate wastewater. For the other processes, most plants avoid producing wastewater by utilizing dry air pollution control methods (e.g., baghouses) where an pollution controls are implemented.

Table III-1

INITIAL OPERATING YEAR (RANGE) SUMMARY OF PLANTS
IN THE SECONDARY LEAD SUBCATEGORY BY DISCHARGE TYPE

Type of Plant Discharge	Plant Age Range (Years) 1983 to 1974 0-10	1973 to 1969 10-15	1968 to 1959 15-25	1958 to 1949 25-35	1948 to 1939 35-45	1938 to 1929 45-55	1928 to 1919 55-65	1918 to 1904 65-80	Before 1904 80+	Insuff. Data	Total
Direct	0	3	1	1	2	0	0	1	0	0	8
Indirect	2	3	2	2	1	2	2	2	0	10	26
Zero	1	2	2	3	2	3	1	0	0	1	15
Total	3	8	5	6	5	5	3	3	0	11	49

TABLE III-2

PRODUCTION RANGES FOR THE SECONDARY LEAD SUBCATEGORY

Production Ranges (kkg/yr)	Number of Plants
0 - 2500	7
2501 - 5000	6
5001 - 10000	9
10001 - 15000	11
15001 - 20000	6
20001 - 30000	6
30001 - +	3
Not Reported	1
Total Number Plants	49

TABLE III-3

SUMMARY OF SECONDARY LEAD SUBCATEGORY PROCESSES AND ASSOCIATED WASTE STREAMS

Process	Number of Plants With Process	Number of Plants Generating Wastewater*
Battery Cracking	35	35
-Battery Case Classification	8	8
-Led Paste Desulfurization	1	1
-Lead Dross Preparation	4	0
Smelting	48	-
-Air Pollution Control	48	7
Lead Oxide Production	11	1
Refining and Alloying	42	-
-Air Pollution Control	28	10
Casting	26	9

* Through reuse or evaporation practices, a plant may generate a wastewater from a process but not discharge it.

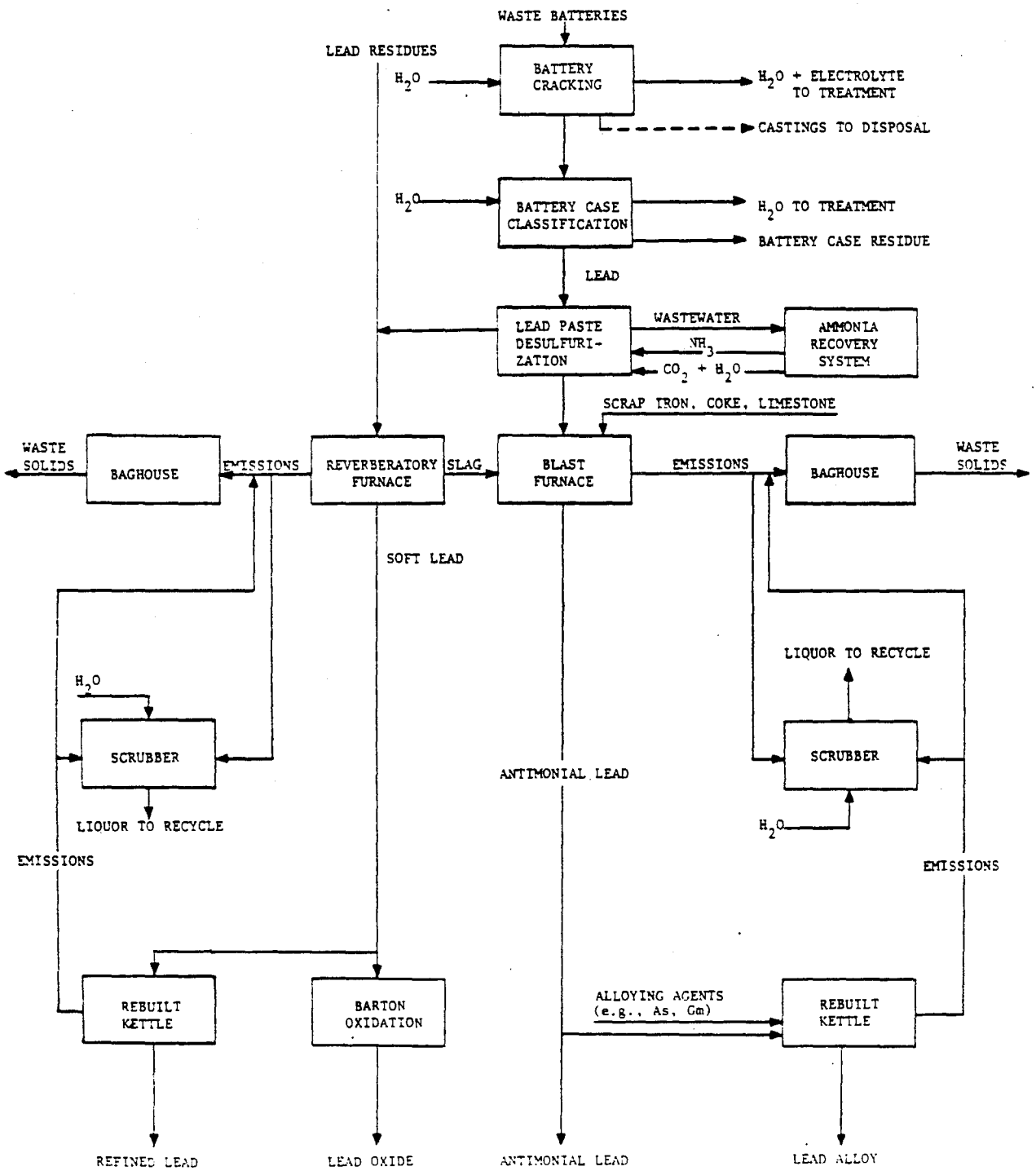

Figure III-1

SECONDARY LEAD SMELTING PROCESS

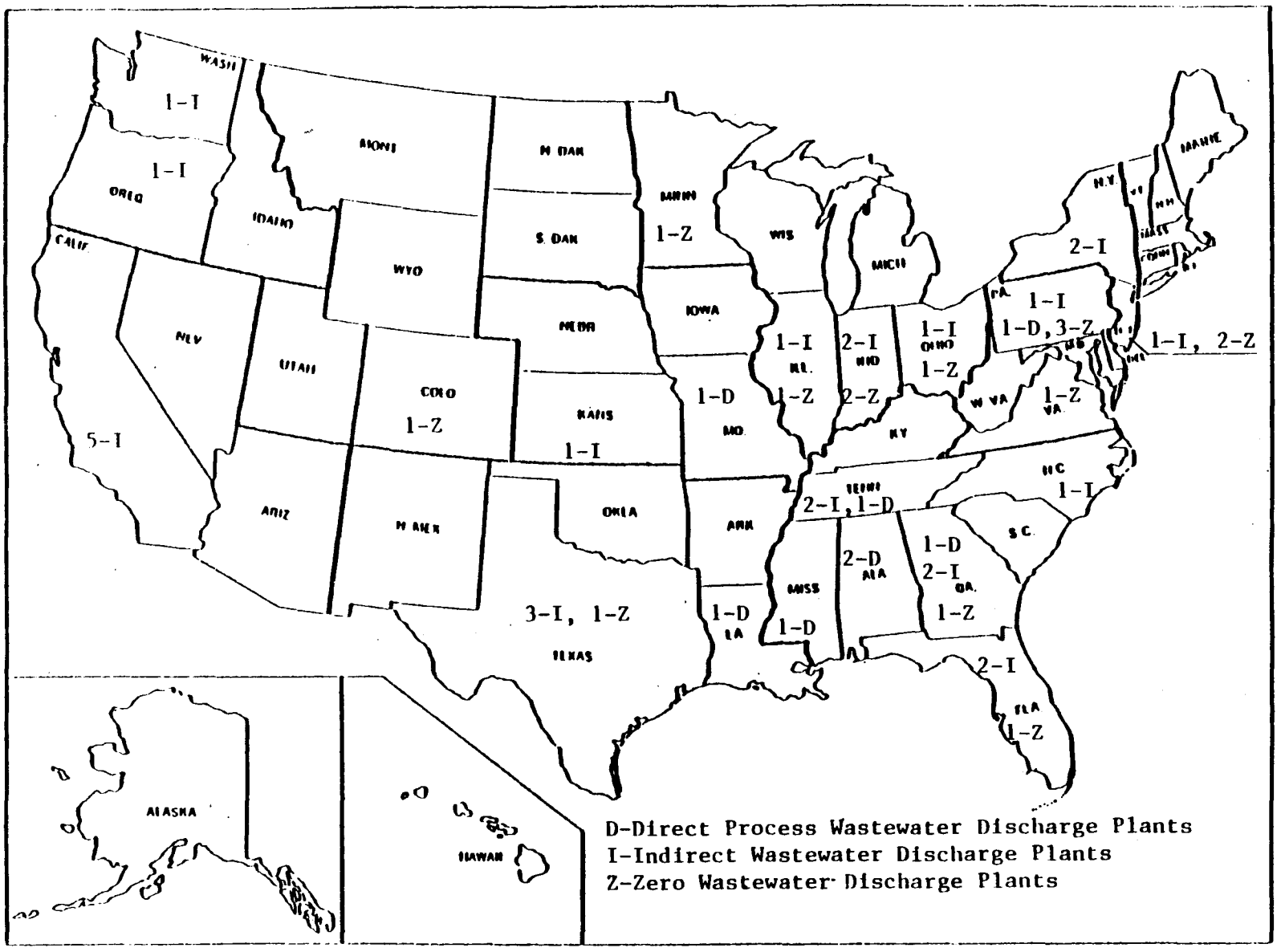

Figure III-2

GEOGRAPHIC LOCATIONS OF SECONDARY LEAD PLANTS

Page Intentionally Blank

SECTION IV

SUBCATEGORIZATION

This section summarizes the factors considered during the designation of the secondary lead subcategory and its related subdivisions. EPA promulgated BPT and BAT effluent limitations, and NSPS, PSES, and PSNS for the secondary lead subcategory in March 1984.

FACTORS CONSIDERED IN SUBDIVIDING THE SECONDARY LEAD SUBCATEGORY

The factors listed for general subcategorization were each evaluated when considering subdivision of the secondary lead subcategory. In the discussion that follows, the factors will be described as they pertain to this particular subcategory.

The rationale for considering segmentation of the secondary lead subcategory is based primarily on the production process used. Within this subcategory, a number of different operations are performed, which may or may not have a water use or discharge, and which may require the establishment of separate effluent limitations and standards. While secondary lead production is still considered a single subcategory, a more thorough examination of the production processes, water use and discharge practices, and pollutant generation rates has illustrated the need for limitations and standards based on a specific set of waste streams. Limitations and standards will be based on specific flow allowances for the following building blocks:

1. Battery cracking,
2. Furnace wet air pollution control,
3. Kettle wet air pollution control,
4. Lead paste desulfurization,
5. Casting contact cooling water,
6. Truck wash,
7. Facility washdown,
8. Battery case classification,
9. Employee hand wash,
10. Employee respirator wash, and
11. Laundering of uniforms.

OTHER FACTORS

The other factors considered in this evaluation were shown to be inappropriate as a bases for further segmentation of the secondary lead subcategory. Air pollution control methods, treatment costs, nonwater quality aspects, and total energy requirements were each shown to be functions of the selected subcategorization factors -- metal product, raw materials, and production processes. As such, they support the method of subcategorization which has been applied. As discussed in

Section IV of Vol. I, such other factors as plant age, plant size, and the number of employees were also evaluated and determined to be inappropriate for use as bases for subcategorization of nonferrous metal plants.

PRODUCTION NORMALIZING PARAMETERS

The effluent limitations and standards developed in this document establish mass limitations on the discharge of specific pollutant parameters. To allow these regulations to be applied to plants with various production capacities, the mass of pollutant discharged must be related to a unit of production. This factor is known as the production normalizing parameter (PNP). In general, the amount of lead produced by the respective manufacturing process is used as the PNP. This is based on the premise that the amount of water generated is proportional to the amount of product made. Variations in the association between the amount of water generated and the amount of product made are not felt to be significant enough to prevent the establishment of effluent limitations and standards. The PNP's for the secondary lead building blocks are as follows:

	Building Block	PNP
1.	Battery cracking	kkg of lead scrap produced
2.	Furnace wet air pollution control	kkg of lead produced from smelting
3.	Kettle wet air pollution control	kkg of lead produced from refining
4.	Lead paste desulfurization	kkg of lead processed through desulfurization
5.	Casting contact cooling water	kkg of lead cast
6.	Truck wash	kkg of lead produced from smelting
7.	Facility washdown	kkg of lead produced from smelting
8.	Battery case classification	kkg of lead scrap produced
9.	Employee hand wash	kkg of lead produced from smelting
10.	Employee respirator wash	kkg of lead produced from smelting
11.	Laundering of uniforms	kkg of lead produced from smelting

SECTION V

WATER USE AND WASTEWATER CHARACTERISTICS

This section describes the characteristics of wastewater associated with the secondary lead subcategory. Data used to quantify wastewater flow and pollutant concentrations are presented, summarized, and discussed. The contribution of specific production processes to the overall wastewater discharge from secondary lead plants is identified whenever possible.

Two principal data sources were used: data collection portfolios (dcp) and field sampling results. Data collection portfolios contain information regarding wastewater flows and production levels.

In order to quantify the pollutant discharge from secondary lead plants, a field sampling program was conducted. A complete list of the pollutants considered and a summary of the techniques used in sampling and laboratory analyses are included in Section V of Vol. I. Wastewater samples were collected in two phases: screening and verification. The first phase, screen sampling, was to identify which toxic pollutants were present in the wastewaters from production of the various metals. Screening samples were analyzed for 125 of the 126 toxic pollutants and other pollutants deemed appropriate. Because the analytical standard for TCDD was judged to be too hazardous to be made generally available, samples were never analyzed for this pollutant. There is no reason to expect that TCDD would be present in nonferrous metals manufacturing wastewater. A total of 10 plants were selected for screen sampling in the nonferrous metals manufacturing category, one of them being a secondary lead facility. Verification sampling was conducted at seven secondary lead plants. In general, the samples were analyzed for three classes of pollutants: toxic organic pollutants, toxic metal pollutants, and criteria pollutants (which includes both conventional and nonconventional pollutants).

Two additional verification sampling efforts were conducted between the February 1983 proposal and the March 1984 promulgation. Both plants are integrated battery manufacturing and secondary lead smelting facilities. EPA believed additional process and wastewater data were needed to completely characterize the secondary lead subcategory.

As described in Section IV of this supplement, the secondary lead subcategory has been further segmented into 11 building blocks, so that the regulation contains mass discharge limitations and standards for 11 process waste waters. Differences in the wastewater characteristics associated with these building blocks are to be expected. For this reason, wastewater streams corresponding to each segment are addressed separately in the discussions that follow.

WASTEWATER SOURCES, DISCHARGE RATES, AND CHARACTERISTICS

The wastewater data presented in this section were evaluated in light of production process information compiled during this analysis. From this information, it was possible to identify the principal wastewater sources in the secondary lead subcategory. These wastewater sources include:

1. Battery cracking,
2. Furnace wet air pollution control,
3. Kettle wet air pollution control,
4. Lead paste desulfurization,
5. Casting contact cooling water,
6. Truck wash,
7. Facility washdown,
8. Battery case classification,
9. Employee hand wash,
10. Employee respirator wash, and
11. Laundering of uniforms.

Waste streams number 4 and 6 through 11 were added after the February 1983 proposal as a result of comments and new data received by the Agency. Through specific data requests, new dcp, and telephone contacts, the Agency determined that these building blocks should be included within the secondary lead subcategory. Wastewater from two secondary lead facilities was sampled after proposal to verify that these streams were sufficiently contaminated to warrant treatment. All of this new information was available for public comment in the Notice of Availability of Information published on November 4, 1983 (49 FR 50906).

Data supplied by dcp responses were evaluated and two flow-to-production ratios were calculated for each stream. These two ratios, normalized water use and normalized wastewater discharge flow rate, differ by the water flow rates used in their calculation. Water use is defined as the volume of water or other fluid (e.g., battery electrolyte) required for or generated in a given process per mass of lead produced by the process and is therefore based on the sum of recycle and makeup flows to a given process. The production normalized discharge flow rate is defined as the volume of wastewater actually discharged from a given process for further treatment, disposal, or discharge per mass of lead produced. Differences between the water use and discharge flows associated with a given stream may result from combinations of recycle, evaporation, and carryover on the product. The production values used in calculating these ratios correspond to the production normalizing parameter (PNP) assigned to each stream, as discussed in Section IV of this supplement. The production normalized flows were compiled by stream type. An attempt was made to identify factors that could account for variations in the water use from plant to plant. This information is summarized in this section. A similar analysis of factors affecting the normalized wastewater flow rates is presented in Sections IX, X, XI, and XII where representative

BPT, BAT, BDT, and pretreatment discharge flows are selected for use in calculating effluent limitations.

After proposal, EPA became aware of 12 secondary lead plants which were previously not included in the subcategory. Wastewater flow rates and production data were solicited from these plants through dcp, special requests, and telephone contacts. Additionally, 16 plants either closed or ceased production of secondary lead. Some data from plants already in the Agency's data base were updated or revised because of comments received concerning the proposed regulations. The new data were used to revise and evaluate production normalized flow rates where appropriate (see Section IX). Data from the closed plants are included in this section and throughout the remainder of this document. The Agency believes that flow and production data from these plants provide useful measures of the relationship between production and discharge. In light of this conclusion (and indications that some of the plant closures may not be permanent), the Agency is using these data in its consideration of BPT and BAT performance.

In order to quantify the concentrations of pollutants present in wastewaters from secondary lead plants, wastewater samples were collected at seven plants before proposal. Data from one of the seven plants (Plant G) were not used in determining the proposed regulation but are included for promulgation. After proposal, two additional integrated secondary lead and battery manufacturing facilities were sampled. Analytical data pertaining to battery manufacturing is not presented in this document; it can be found in the Battery Manufacturing Development Document. Block diagrams indicating the locations of sampling points and the production processes involved for each of these nine plants are given in Figures V-1 through V-9 (pages 1934 - 1941).

Raw wastewater sampling data for the secondary lead industry are presented in Tables V-2 (page 1884), V-4 (page 1890), V-6 (page 1895), V-9 (page 1897), V-12 (page 1901), V-13 (page 1904), V-14 (page 1907), and V-15 (page 1910). Treated wastewater sampling data are shown in Tables V-16 through V-22 (pages 1913 - 1932). The stream codes displayed in the tables may be used to identify the location of each of the samples on the process flow diagrams in Figures V-1 through V-9 (pages 1934 - 1941). Where no data are listed for a specific day of sampling, the wastewater samples for the stream were not collected. If the analysis did not detect a pollutant in a waste stream, the pollutant was omitted from the table.

The data tables include some samples measured at concentrations considered not quantifiable. The base neutral extractables, acid extractables, and volatile organics are considered not quantifiable at concentrations equal to or less than 0.010 mg/l. Below this concentration, organic analytical results are not quantitatively accurate; however, the analyses are useful to indicate the presence of a particular pollutant. The pesticide

fraction is not considered quantifiable below concentrations of 0.005 mg/l. Nonquantifiable results are designated in the tables with an asterisk (double asterisk for pesticides).

These detection limits shown on the data tables are not the same in all cases as the published detection limits for these pollutants by the same analytical methods. The detection limits used were reported with the analytical data and hence are the appropriate limits to apply to the data. Detection limit variation can occur as a result of a number of laboratory-specific, equipment-specific, and daily operator-specific factors. These factors can include day-to-day differences in machine calibration, variation in stock solutions, and variation in operators.

The statistical analysis of data includes some samples measured at concentrations considered not quantifiable. Data reported as an asterisk are considered as detected but below quantifiable concentrations, and a value of zero is used for averaging. Toxic organic, nonconventional, and conventional data reported with a "less than" sign are considered as detected, but not further quantifiable. A value of zero is also used for averaging. If a pollutant is reported as not detected, it is excluded in calculating the average. Finally, toxic metal values reported as less than a certain value were considered as not detected, and a value of zero was used in the calculation of the average. For example, three samples reported as ND, *, and 0.021 mg/l have an average value of 0.010 mg/l. In selecting pollutants and pollutant parameters for specific regulation, individual samples were used rather than average values.

The method by which each sample was collected and composited is indicated on the data tables by a code number, as follows:

1 one-time grab
2 24-hour manual composite
3 24-hour automatic composite
4 48-hour manual composite
5 48-hour automatic composite
6 72-hour manual composite
7 72-hour automatic composite
8 8-hour manual composite

In the data collection portfolios, the secondary lead plants which discharge were asked to specify the presence or absence of the toxic pollutants in their effluent. Of the 49 secondary lead smelters, 23 responded to this portion of the questionnaire. All plants responding to the organic compounds portion reported that all toxic organic pollutants were known to be absent or believed to be absent from their wastewater.

The responses for the toxic metals are summarized below.

Pollutant	Known Present	Believed Present	Believed Absent	Known Absent
Antimony	13	6	4	-
Arsenic	9	7	7	-
Cadmium	7	7	6	3
Chromium	3	5	11	4
Copper	12	2	8	1
Lead	18	4	-	-
Mercury	2	4	13	4
Nickel	6	4	11	2
Silver	2	3	18	-
Thallium	1	6	17	3
Zinc	10	7	6	-

BATTERY CRACKING

Plants utilizing lead-acid batteries as a source of process raw materials produce a wastewater stream associated with the battery cracking operation. Battery cracking involves the breaking of battery cases by any of a number of methods described in Section III. Wastewater may be generated in the form of electrolyte drained from the battery cases, by the use of saw or breaker cooling water, and by area wash water. All 35 plants currently having battery cracking operations generate wastewater. Table V-1 (page 1883) summarizes the normalized discharge flows for these plants in terms of liters per metric ton of lead scrap produced (recovered) from battery cracking operations. The Agency knows of no reason to differentiate discharge flows based on the method used to break batteries. The discharge flows include the operations that generate the most wastewater, i.e., battery electrolyte, saw or breaker contact cooling water, and area wash water. Table V-2 (page 1884) summarizes the field sampling data for the toxic, conventional, and nonconventional pollutants detected. This waste stream contains quantifiable concentrations of toxic organics. The metals antimony, arsenic, cadmium, copper, and zinc are generally present in concentrations from 1 to 47 mg/l. Lead concentrations range from approximately 5 to 1,300 mg/l. Treatable concentrations of total suspended solids, and oil and grease, and low pH (less than 2) also characterize the raw wastewater from this building block.

BLAST, REVERBERATORY, OR ROTARY FURNACE WET AIR POLLUTION CONTROL

Blast, rotary, and reverberatory furnaces used in the smelting operation in secondary lead plants generally require some type of air pollution control to limit emissions, especially of particulates and sulfur oxide compounds. Out of 48 plants having smelting operations, seven use lime or sodium wet air pollution control devices; 41 use dry air pollution control. Table V-3 (page 1889) summarizes the water use and discharge rates for these plants. Sampling and analytical data obtained on furnace

scrubbing liquor are shown in Table V-4 (page 1890). Treatable concentrations of toxic metals, oil and grease, and total suspended solids characterize this wastewater stream.

KETTLE WET AIR POLLUTION CONTROL

Kettles used in refining and alloying operations in secondary lead plants may also produce air pollutants, especially particulate matter, which may require control. Ten of the 42 plants reporting the use of refining and alloying kettles use wet air pollution control. Table V-5 (1894) shows the production normalized water use and discharge rates for these plants. Data obtained on the kettle scrubber liquor at one of these plants (presented in Table V-6 page 1895) contained measurable concentrations of ammonia and treatable concentrations of total suspended solids, arsenic, and lead (50 to 380 mg/l) with measurable concentrations of other metals.

LEAD PASTE DESULFURIZATION

One plant operates a process to convert lead sulfate paste into lead oxide using ammonium carbonate. All "wastewater" streams generated in the process are recycled. Ammonium sulfate solids are sold as by-products. The plant with this operation does not discharge wastewater from the process. No sampling of this water was conducted but it is expected to contain lead and total suspended solids.

CASTING CONTACT COOLING WATER

Contact cooling water may be used in the casting operation. The cooling water is frequently recycled and may be totally evaporated, but a small stream may be blown down to limit the buildup of dissolved solids, which may cause surface imperfections on the cast metal. Nine plants of the 46 reporting the use of a casting operation use direct contact cooling. The normalized water use and discharge data for these plants are summarized in Table V-7 (page 1896). The Agency used wastewater sampling data for casting contact cooling from a nonferrous metals forming lead ingot casting operation to evaluate if this contains treatable concentrations of pollutants. The Agency believes that lead ingot casting contact cooling water from nonferrous forming is similar in characteristic to casting contact cooling water from secondary lead smelters because of the similarity of the operations. The casting contact cooling water from nonferrous forming contains treatable concentrations of lead and total suspended solids. This stream has a pH of approximately 7.8.

TRUCK WASH

Some plants wash trucks and pallets that are used to haul scrap batteries. Wastewater use and discharge rates for this waste stream are presented in Table V-8 (page 1896). Wastewater

sampling data for truck wash were collected after proposal from two secondary lead facilities (see Table V-9 1897). This wastewater contains treatable concentrations of arsenic, cadmium, chromium, lead, nickel, zinc, oil and grease, and total suspended solids. The wastewater is also acidic (pH of 3).

FACILITY WASHDOWN

Nine plants report using water to wash floors and equipment as a control of fugitive lead emissions. Table V-10 (1900) presents the water use and discharge rates practiced at the nine plants. Wastewater samples from secondary lead plants were not taken but analogous wastewater from a battery manufacturing plant contains treatable concentrations of toxic metals and total suspended solids. The battery manufacturing data are included in the administrative record supporting this regulation.

BATTERY CASE CLASSIFICATION

Eight plants operate battery case classification processes. Lead and battery cases are separated using water as a flotation medium. All eight plants generate wastewater. Water use and wastewater discharge rates are presented in Table V-11 (1900). Waste water samples for this waste stream were not collected by the Agency. However, data for five parameters were submitted by a secondary lead plant operating this process. These data, included in the administrative record, show treatable concentrations of arsenic, antimony, lead, and zinc. This wastewater is also very acidic (pH of approximately 2.9). Although not analyzed, total suspended solids are also expected to be present at a treatable concentration.

EMPLOYEE HAND WASH

Secondary lead plant employees must wash their hands before breaks and end-of-shift to reduce occupational lead exposures. The Agency obtained water use and sampling data for this waste stream to discern whether a flow allowance was needed. Very little flow data were available for this stream. The method for determining the regulatory flow allowance is presented in Section IX - Wastewater Discharge Rates. Flow and sampling data were collected by the Agency at two integrated secondary lead smelter and battery manufacturing plants. The Agency has determined that each employee uses approximately 4.53 liters (1.2 gallons) of wash water per day. Wastewater samples indicate that this wastewater is basic (pH of 8.0) and contains treatable concentrations of copper, lead, zinc, total suspended solids, and oil and grease. Wastewater sampling data are presented in Table V-12 (page 1901).

EMPLOYEE RESPIRATOR WASH

Respirators worn at secondary lead smelters to reduce occupational lead exposures must be cleaned daily. The Agency collected water use and wastewater sampling data for this stream

at two integrated secondary lead battery manufacturing plants. The Agency has determined that approximately 7.34 liters (1.94 gallons) of wash water are used per employee per day to clean respirators. This flow includes germicide used to disinfect the respirators. Calculation of the production normalized discharge allowance for this waste stream is discussed in Section IX. Wastewater sampling data, shown in Table V-13 (page 1904), indicate the presence of copper, lead, zinc, and total suspended solids in this water. The pH is neutral (7.0).

LAUNDERING OF UNIFORMS

Employee uniforms must be laundered daily to meet industrial hygiene requirements. The Agency measured flows and sampled this wastewater since industry data were not available. Data were collected at two secondary lead-battery manufacturing facilities. The Agency has determined that approximately 21.6 liters (5.7 gallons) of water per employee per day are used for laundering of uniforms. The regulatory flow allowance for this stream is discussed in Section IX. Wastewater sampling data for this waste stream are presented in Table V-14 (page 1907). These data show treatable concentrations of lead, zinc, and total suspended solids. The pH is slightly acidic (6.0).

TABLE V-1

WATER USE AND DISCHARGE RATES FOR BATTERY CRACKING OPERATIONS
(l/kkg of lead scrap produced)

Plant Code	Percent Recycle	Production Normalized Water Use and Discharge Rate
222	0	139
223	0	775
224	0	834
225	0	763
227	0	384
234	0	437
236	0	142
239	0	154
244	0	306
246*	0	315
248	0	1618
249	0	442
250	0	1984
254	0	796
263	0	1046
264	0	1647
265	0	1084
266	0	4669
271	0	81
272	0	5086
273	0	286
391	0	922
392	0	369
428	0	244
652	0	429
655	0	905
4210*	0	671
4211	0	377
6601	0	467
6602	0	484
6603	0	617
6604	0	NR
6605	0	292
6606	0	671
6611	0	NR
9001	0	1063
9002*	0	638
26001	0	705
26003*	0	600

NOTE: Water use and discharge rate are the same for all plants in data base.
* - Plant closed.
NR - Data not reported in dcp

Table V-2

SECONDARY LEAD SAMPLING DATA
BATTERY CRACKING
RAW WASTEWATER

Pollutants (a)	Stream Code	Sample Type†	Concentrations (mg/l, Except as Noted) Source	Day 1	Day 2	Day 3	Average
Toxic Pollutants							
23. chloroform	73	2		ND	0.014	0.026	0.02
	106	2		*	*	ND	*
	208	1		ND			
47. bromoform	73	2	ND	ND	ND		
	106	2		ND	ND	0.049	0.049
	208	1		ND			
66. bis(2-ethylhexyl) phthalate	73	7	0.575	0.575			0.575
	106	7		0.585			0.585
	152	3		*	0.2	*	0.067
	208	2		ND			
68. di-n-butyl phthalate	73	7	*	*			*
	106	7		0.028			0.028
	152	3		ND	*	ND	*
	208	2		ND			
69. di-n-octyl phthalate	73	7	*	*			*
	106	7		0.026			0.026
	208	2		ND			
71. dimethyl phthalate	73	7	ND	ND			
	106	7		0.013			0.013
	208	2		ND			
76. chrysene	73	7	ND	ND			
	106	7		0.545			0.545
	208	2		ND			
77. acenaphthylene	73	7	*	ND			
	106	7		0.035			0.035
	208	2		ND			

Table V-2 (Continued)

SECONDARY LEAD SAMPLING DATA
BATTERY CRACKING
RAW WASTEWATER

	Pollutants (a)	Stream Code	Sample Type†	Concentrations (mg/l, Except as Noted) Source	Day 1	Day 2	Day 3	Average
84.	pyrene	73	7	*	ND			
		106	7		0.013			0.013
		208	2		ND			
114.	antimony	73	7	<0.1	95			95
		106	7		77			77
		152	3		16	12	49	26
		208	2		18.41			18.41
		412	8	<0.01	24	12	47	27
115.	arsenic	73	7	<0.01	8.5			8.5
		106	7		9.1			9.1
		152	3		1.2	3	8	4.1
		412	8	<0.01	0.43	0.78	1.8	1.0
117.	beryllium	73	7	<0.001	0.002		0.03	0.016
		106	7		0.003			0.003
		152	3		0.006	0.007	0.002	0.005
		412	8	<0.005	<0.05	<0.05	<0.05	<0.05
118.	cadmium	73	7	0.03	1		0.09	0.545
		106	7		3			3
		152	3		2.1	2.2	4.8	3
		208	2		3			3
		412	8	<0.02	5.2	1.8	15.4	7.4
119.	chromium	73	7	<0.005	0.4		0.06	0.23
		106	7		1			1
		152	3		0.15	0.23	0.27	0.22
		208	2		0.43			0.43
		412	8	<0.02	0.4	0.2	1	0.5

Table V-2 (Continued)

SECONDARY LEAD SAMPLING DATA
BATTERY CRACKING
RAW WASTEWATER

	Pollutants (a)	Stream Code	Sample Type	Concentrations (mg/l Except as Noted) Source	Day 1	Day 2	Day 3	Average
120.	copper	73	7	0.01	4		0.7	2.35
		106	7		6			6
		152	3		3.5	3.4	4.0	3.6
		208	2		1.8			1.8
		412	8	0.15	24	11.5	14.5	16.6
121.	cyanide	73	3		0.004	0.008	0.007	0.006
		106	7		3.0	4.0	6.0	4.3
		208	2		<0.01			<0.01
122.	lead	73	7	0.05	80		1	40.5
		106	7		40			40
		152	3		11	4.6	4.7	6.8
		208	2		92.2			92.2
		412	8	<0.05	605	1,300	277	727
123.	mercury	73	7	0.0001	0.0014		0.0061	0.00375
		106	7		0.0101			0.0101
		152	3		0.0004	0.0003	0.0005	0.0004
		208	2		<0.62			<0.62
124.	nickel	73	7	<0.005	1		ND	
		106	7		2			2
		152	3		0.65	0.98	1.1	0.91
		208	2		0.94			0.94
		412	8	<0.05	2	<0.05	6.5	3
126.	silver	73	7	<0.02	0.32			0.32
		106	7		0.16			0.16
		152	3		0.34	0.03	0.03	0.31
127.	thallium	73	7	<0.1	0.8			0.8
		106	7		1			1
		152	3		<0.001	<0.001	<0.001	<0.001
128.	zinc	73	7	0.1	5		3	4
		106	7		10			10
		152	3		3.1	4.8	4.0	4
		208	2		7.6			7.6
		412	8	<0.02	21.8	9	22.6	17.8

Table V-2 (Continued)

SECONDARY LEAD SAMPLING DATA
BATTERY CRACKING
RAW WASTEWATER

Pollutants (a)	Stream Code	Sample Type†	Concentrations (mg/l, Except as Noted) Source	Day 1	Day 2	Day 3	Average
Nonconventional							
aluminum	412	8	<0.1	20	9	38	22
ammonia	152	2		0.02	7.9	7.5	5.1
	412	8			15	<0.02	7.5
barium	412	8	0.05	<0.5	<0.5	<0.5	<0.5
boron	412	8	<0.1	6	2	9	6
calcium	412	8	51.5	93	39	166	99
chemical oxygen demand (COD)	73	7		384			384
	106	7		174			174
cobalt	412	8	<0.05	<0.5	<0.5	<0.5	<0.5
iron	412	8	<0.05	111	58	173	114
magnesium	412	8	22.3	29	15	60	34
manganese	412	8	<0.05	0.5	<0.05	11	4
molybdenum	412	8	<0.05	<0.5	<0.05	<0.5	<0.35
phenols (total; by 4-AAP method)	73	2		0.001	0.003	0.017	0.007
	106	2		0.022	0.016	0.009	0.01567
	208	2		<0.004			<0.004
sodium	412	8	7.1	142	58	375	190
tin	412	8	<0.05	<0.5	<0.05	<0.5	<0.35
titanium	412	8	<0.05	1.5	<0.05	<0.5	0.5

Table V-2 (Continued)

SECONDARY LEAD SAMPLING DATA
BATTERY CRACKING
RAW WASTEWATER

Pollutants (a)	Stream Code	Sample Type†	Concentrations (mg/l, Except as Noted) Source	Day 1	Day 2	Day 3	Average
Nonconventionals (Continued)							
total organic carbon (TOC)	73	7		330			330
	106	7		69			69
vanadium	412	8	<0.05	<0.5	<0.05	<0.5	0.35
yttrium	412	8	<0.05	<0.5	<0.05	<0.5	0.35
Conventionals							
oil and grease	73	1		65	56	56	59.0
	106	1		8	7	6	7.0
	412	1	5.4	2.2	>50,000	6,100	19,000
total suspended solids (TSS)	73	7		10,050			10,050
	106	7		1,447			1,447
	152	3		270	300	400	323
	208	5		0.2			0.2
	412	8	<1	2,000	75	20,200	7,400
pH (standard units)	73	1		2	2	2	
	106	1			1.1	0.6	
	152	1		1.9	1.7	1.0	
	208	1		0.6			
	412	8	7.0	3	1	1	

(a) No samples were analyzed for the acid extractables of toxic organic pollutants. Six samples were analyzed for the pesticide fraction; no pesticide was reported present above its analytical quantification limit. No toxic organic fractions were analyzed for stream 412.

†Sample type: Note: These numbers also apply to subsequent sampling data tables in this section.

1	One-time grab	5	48-hour automatic composite
2	24-hour manual composite	6	72-hour manual composite
3	24-hour automatic composite	7	72-hour automatic composite
4	48-hour manual composite	8	8-hour manual composite

* - Less than or equal to 0.01 mg/l.

** - Less than or equal to 0.005 mg/l.

TABLE V-3

WATER USE AND DISCHARGE RATES FOR
FURNACE WET AIR POLLUTION CONTROL
(l/kkg of lead produced from smelting)

Plant Code	Percent Recycle	Production Normalized Water Use and Discharge Rate	
266 (a)	0	3252	3252
26001	100	151050	0
272	83.7	40411	6587
265 (b)	83.3	11433	1909
265	93.3	26521	1776
234	100	942	0
222	97.8	NR	NR
6602	95	154752	7831
6611	99.8	NR	NR

(a) Since the 1977 dcp survey, this scrubber has been shut down.

(b) Plant 265 controls air emissions on two furnaces with separate scrubbers

NR - Not reported in dcp.

Table V-4

SECONDARY LEAD SAMPLING DATA
FURNACE WET AIR POLLUTION CONTROL
RAW WASTEWATER

Pollutants(a)	Stream Code	Sample Type	Concentrations (mg/l, Except as Noted) Source	Day 1	Day 2	Day 3	Average
Toxic Pollutants							
4. benzene	401	1	*	*	*	*	*
11. 1,1,1-trichloroethane	401	1	*	*	ND	ND	*
21. 2,4,6-trichlorophenol	401	3	ND	*	*	*	*
23. chloroform	401	1	*	*	*	*	*
31. 2,4-dichlorophenol	401	3	ND	*	*	*	*
39. fluoranthene	401	3	*	ND	*	ND	*
44. methylene chloride	401	1	*	*	*	*	*
57. 2-nitrophenol	401	3	ND	*	ND	ND	*
65. phenol	401	3	*	0.003	0.006	0.004	0.004
66. bis(2-ethylhexyl) phthalate	401	3	0.009	0.006	0.002	*	0.002
67. butyl benzyl phthalate	401	3	ND	ND	*	*	*
68. di-n-butyl phthalate	401	3	*	*	*	*	*
72. benzo(a)anthracene	401	3	*	ND	*	*	*
76. chrysene	401	3	*	*	*	*	*
78. anthracene (a)	401	3	*	*	*	ND	*
80. fluorene	401	3	*	*	*	*	*
81. phenanthrene (a)	401	3	*	*	*	ND	*
84. pyrene	401	3	*	ND	*	ND	*

Table V-4 (Continued)

SECONDARY LEAD SAMPLING DATA
FURNACE WET AIR POLLUTION CONTROL
RAW WASTEWATER

Pollutants(a)	Stream Code	Sample Type	Concentrations (mg/l, Except as Noted) Source	Day 1	Day 2	Day 3	Average
Toxic Pollutants (Continued)							
86. toluene	401	1	*	ND	*	*	*
89. aldrin	401	3	ND	**	ND	ND	**
96. beta-endosulfan	401	3	ND	0.003	ND	ND	0.003
97. endosulfan sulfate	401	3	**	ND	**	**	**
102. alpha-BHC	401	3	ND	**	ND	ND	**
105. delta-BHC	401	3	ND	ND	ND	**	**
114. antimony	401	3	5.700	0.560	0.390	14.000	4.98
115. arsenic	401	3	0.067	1.400	7.3	4.900	4.5
117. beryllium	401	3	<0.001	0.004	<0.001	0.012	0.005
118. cadmium	401	3	0.003	0.35	0.02	0.36	0.24
119. chromium (total)	401	3	0.005	0.28	0.010	0.25	0.18
120. copper	401	3	0.05	0.40	0.05	0.26	0.23
121. cyanide (total)	401	1	0.0074	<0.001	0.003	0.0015	0.0015
122. lead	401 176	3	0.008	1.7 23	0.006	1.4	1.0 23
123. mercury	401	3	<0.0002	<0.0002	0.097	0.096	0.064
124. nickel	401	3	<0.001	4.9	0.45	4.6	3.3
125. selenium	401	3	8.8	10	7.9	15	10
126. silver	401	3	0.02	0.38	<0.001	0.30	0.22
127. thallium	401	3	<0.001	2.6	0.037	3.2	1.9
128. zinc	401	3	0.04	0.32	0.03	0.32	0.22

Table V-4 (Continued)

SECONDARY LEAD SAMPLING DATA
FURNACE WET AIR POLLUTION CONTROL
RAW WASTEWATER

Pollutants(a)	Stream Code	Sample Type	Concentrations (mg/l, Except as Noted) Source	Day 1	Day 2	Day 3	Average
Nonconventional Pollutants							
Alkalinity	401	3	160	27,000	18,000	28,000	24,000
Aluminum	401	3	NA				NA
Ammonia	401	3	2.1	2.5	<0.01	<0.01	0.83
Barium	401	3	NA				NA
Boron	401	3	NA				NA
Calcium	401	3	23	5.0	2.3	2.6	3.3
Chemical Oxygen Demand (COD)	401	3	<1	20,000	28,000	25,000	24,000
Chloride	401	3		NA			NA
Cobalt	401	3		NA			NA
Fluoride	401	3		NA			NA
Iron	401	3		NA			NA
Magnesium	401	3	11	26	3.5	24	17
Manganese	401	3		NA			NA
Molybdenum	401	3		NA			NA
Phenolics	401	1	<0.001	<0.001	<0.001	0.100	0.033
Phosphate	401	3		NA			NA
Sodium	401	3		NA			NA
Sulfate	401	3	55	770	780	780	780
Tin	401	3		NA			NA

Table V-4 (Continued)

SECONDARY LEAD SAMPLING DATA
FURNACE WET AIR POLLUTION CONTROL
RAW WASTEWATER

Pollutants(a)	Stream Code	Sample Type	Concentrations (mg/l, Except as Noted) Source	Day 1	Day 2	Day 3	Average
Conventional Pollutants							
Oil and Grease	401	1	7.3	12	12	45	23
Total Suspended Solids (TSS)	401	3	22	650	940	1,000	860
	176	1		28,000			28,000
pH (standard units)	401	3	6.9	7.3	7.4	6.8	

(a) Stream 176 was analyzed only for lead and TSS.

* - Less than or equal to 0.01 mg/l

** - Less than or equal to 0.005 mg/l

NA - not analyzed

TABLE V-5

WATER USE AND DISCHARGE RATES FOR
KETTLE WET AIR POLLUTION CONTROL
(l/kkg of lead produced from kettle furnaces)

Plant Code	Percent Recycle	Production Normalized Water Use	Discharge Rate
26001	100	151050	0 (a)
655	100	3071	0 (a)
391	100	361	0 (a)
273	91.7	21900	1818
264	96	1845	74
250	-	1718	0 (b)
225	100	11373	0 (a)
224	100	5724	45 (c)
223	100	7089	0 (a)
6611 (d)	99.8	NR	NR

(a) - Infrequent batch discharge; frequency and flow not reported

(b) - 100 percent of the wastewater is recycled to decasing washing

(c) - Based on batch discharge once per week

(d) - Use same scrubber system on smelting furnace

NR - Not reported in dcp

Table V-6

SECONDARY LEAD SAMPLING DATA
KETTLE SCRUBBER LIQUOR
RAW WASTEWATER

Pollutants (a)	Stream Code	Sample Type	Concentrations (mg/l, Except as Noted) Source	Day 1	Day 2	Day 3	Average
Toxic Pollutants							
115. arsenic	151	3		40	60	50	50
117. beryllium	151	3		0.001	0.008	0.001	0.003
118. cadmium	151	3		1.2	0.43	0.41	0.68
119. chromium	151	3		0.003	0.002	0.001	0.002
120. copper	151	3		0.59	1.1	0.73	0.807
122. lead	151	3		75	95	29	66.3
123. mercury	151	3		0.0003	0.0025	0.0027	0.0018
124. nickel	151	3		0.37	0.32	0.54	0.41
126. silver	151	3		0.003	0.002	0.002	0.0023
128. zinc	151	3		0.17	0.17	0.15	0.16
Nonconventional							
ammonia	151	1		22	25	29	25.33
Conventional							
total suspended solids (TSS)	151	3		240	550	340	376.7
pH (standard units)	151	1		8.1	8.0	7.8	

(a) No samples were analyzed for either the acid extractable or volatile fractions of the toxic organic pollutants. Three samples were analyzed for the pesticide fraction; none was detected above its analytical quantification limit.

TABLE V-7

WATER USE AND DISCHARGE RATES FOR
CASTING CONTACT COOLING
(l/kkg of lead cast)

Plant Code	Percent Recycle	Production Normalized Water Use	Discharge Rate
4211	100 (a)	171	0
26001	100	504	0
427	0	120	120
422	0	963	963
248	0	5	5
244	0	184	184
234	0 (a)	22	22
224	0	33	33
247	NR	(b)	(b)
252	NR	(b)	(b)

(a) 100 percent recycle or evaporation

(b) Reported in dcp as "insignificant"

(c) Plant closed

NR Not reported in dcp

TABLE V-8

WATER USE AND DISCHARGE RATES FOR
TRUCK WASH
(l/kkg of lead produced from smelting)

Plant Code	Percent Recycle	Production Normalized Water Use	Discharge Rate
227	0	12.6	12.6
234	0	29.7	29.7

Table V-9 (Continued)

SECONDARY LEAD SAMPLING DATA
TRUCK WASH
RAW WASTEWATER

Pollutants(a)	Stream Code	Sample Type	Concentrations (mg/l, Except as Noted) Source	Day 1	Day 2	Day 3	Average
Nonconventional Pollutants (Continued)							
Boron	417	1	<0.1			0.1	0.1
	455	1	<0.1			0.8	0.8
Calcium	417	1	51.5			104	
	455	1	93.2			1,200	1,200
Cobalt	417	1	<0.05			<0.05	<0.05
	455	1	<0.05			0.05	0.05
Iron	417	1	<0.05			53.8	53.8
	455	1	<0.05			1,050	1,050
Magnesium	417	1	22.3			34.4	34.4
	455	1	27.2			42.6	42.6
Manganese	417	1	<0.05			1.15	1.15
	455	1	<0.05			7.2	7.2
Molybdenum	417	1	<0.05			<0.05	<0.05
	455	1	<0.05			<0.05	<0.05
Sodium	417	1	7.1			37.6	37.6
	455	1	14.9			107	107
Tin	417	1	<0.05			<0.05	<0.05
	455	1	<0.05			<0.5	<0.5
Titanium	417	1	<0.05			0.1	0.1
	455	1	<0.05			0.05	0.05
Vanadium	417	1	<0.05			<0.05	<0.05
	455	1	<0.05			0.1	0.1
Yttrium	417	1	<0.05			<0.05	<0.05
	455	1	<0.05			<0.05	<0.05

Table V-9

SECONDARY LEAD SAMPLING DATA
TRUCK WASH
RAW WASTEWATER

Pollutants(a)	Stream Code	Sample Type	Concentrations (mg/l, Except as Noted) Source	Day 1	Day 2	Day 3	Average
Toxic Pollutants							
114. antimony	417	1	<0.01			0.810	0.810
	455	1	<0.01			0.31	0.31
115. arsenic	417	1	<0.01			0.060	0.060
	455	1	<0.01			0.05	0.05
117. beryllium	417	1	<0.005			<0.005	<0.005
	455	1	<0.005			<0.005	<0.005
118. cadmium	417	1	<0.02			0.24	0.24
	455	1	<0.02			0.04	0.04
119. chromium (total)	417	1	<0.02			0.14	0.14
	455	1	<0.02			0.18	0.18
120. copper	417	1	0.15			0.8	0.8
	455	1	0.15			1.2	1.2
122. lead	417	1	<0.05			63.4	63.4
	455	1	<0.05			20.9	20.9
124. nickel	417	1	<0.05			0.15	0.15
	455	1	<0.05			0.25	0.25
128. zinc	417	1	<0.02			6.12	6.12
	455	1	<0.02			1.58	1.58
Nonconventional Pollutants							
Aluminum	417	1	<0.1			160	160
	455	1	0.1			37.8	37.8
Ammonia	417	1	NA			NA	
	455	1	NA			NA	
Barium	417	1	0.05			0.35	0.35
	455	1	<0.05			0.05	0.05

Table V-9 (Continued)

SECONDARY LEAD SAMPLING DATA
TRUCK WASH
RAW WASTEWATER

Pollutants(a)	Stream Code	Sample Type	Concentrations (mg/l, Except as Noted) Source	Day 1	Day 2	Day 3	Average
Conventional Pollutants							
Oil and Grease	417	1	5.4			26	26
	455	1	<1			7	7
Total Suspended Solids (TSS)	417	1	<1			1,080	1,080
	455	1	9.0			2,500	2,500
pH (standard units)	417	1	7.0			3.0	
	455	1	7.0			3.0	

(a) The toxic organic fractions were not analyzed for these streams.

NA - Not analyzed

TABLE V-10

WATER USE AND DISCHARGE RATES FOR FACILITY WASHDOWN
(l/kkg of lead produced from smelting)

Plant Code	Percent Recycle	Production Normalized Water Use	Production Normalized Discharge Rate
224	0	550	550
239	NR*	817	817
249	0	1535	1535
271	NR*	2540	2540
655	86*	646	646
6603	0	237	237
6604	0	NR	NR
6605	0	876	876
6608	NR	NR	NR

* - Practices recycle and reuse after treatment

NR - Data not reported in dcp

TABLE V-11

WATER USE AND DISCHARGE RATES FOR BATTERY CASE CLASSIFICATION
(l/kkg of lead scrap produced)

Plant Code	Percent Recycle	Production Normalized Water Use	Production Normalized Discharge Rate (a)
223	NR *	1268	1268
224	0	796	796
227	0	5546	5546
239	NR	409	409
271	NR *	15400	15400
6601	88.2*	2624	2624
6603	0	1314	1314
6605	0	2915	2915

(a) Includes some batch discharge normalized to continuous basis

* - Practices recycle and reuse after treatment

NR Data not reported in dcp

Table V-12

SECONDARY LEAD SAMPLING DATA
HAND WASH
RAW WASTEWATER

Pollutants(a)	Stream Code	Sample Type	Concentrations (mg/l, Except as Noted) Source	Day 1	Day 2	Day 3	Average
Toxic Pollutants							
114. antimony	416	1	<0.01			0.04	0.04
	451	1	<0.01			0.42	0.42
115. arsenic	416	1	<0.01			0.03	0.03
	451	1	<0.01			0.03	0.03
117. beryllium	416	1	<0.005			<0.005	<0.005
	451	1	<0.005			<0.005	<0.005
118. cadmium	416	1	<0.02			<0.02	<0.02
	451	1	<0.02			<0.02	<0.02
119. chromium (total)	416	1	<0.02			<0.02	<0.02
	451	1	<0.02			0.02	0.02
120. copper	416	1	0.15			0.7	0.7
	451	1	0.15			1.05	1.05
122. lead	416	1	<0.05			13.9	13.9
	451	1	<0.05			8.6	8.6
124. nickel	416	1	<0.05			0.05	0.05
	451	1	<0.05			<0.05	<0.05
128. zinc	416	1	<0.02			0.36	0.36
	451	1	<0.02			1.3	1.3
Nonconventional Pollutants							
Aluminum	416	1	<0.1			0.1	0.1
	451	1	0.1			0.3	0.3
Ammonia	416	1	NA			NA	
	451	1	NA			NA	
Barium	416	1	0.05			0.1	0.1
	451	1	<0.05			0.05	0.05

Table V-12 (Continued)

SECONDARY LEAD SAMPLING DATA
HAND WASH
RAW WASTEWATER

Pollutants(a)	Stream Code	Sample Type	Concentrations (mg/l, Except as Noted) Source	Day 1	Day 2	Day 3	Average
Nonconventional Pollutants (Continued)							
Boron	416	1	<0.1			29.9	29.9
	451	1	<0.1			12.5	12.5
Calcium	416	1	51.5			27.2	27.2
	451	1	93.2			104	104
Cobalt	416	1	<0.05			<0.05	<0.05
	451	1	<0.05			<0.05	<0.05
Iron	416	1	<0.05			0.65	0.65
	451	1	<0.05			1.45	1.45
Magnesium	416	1	22.3			11.2	11.2
	451	1	27.2			29.2	29.2
Manganese	416	1	<0.05			<0.05	<0.05
	451	1	<0.05			<0.05	<0.05
Molybdenum	416	1	<0.05			<0.05	<0.05
	451	1	<0.05			<0.05	<0.05
Sodium	416	1	7.1			123	123
	451	1	14.9			293	293
Tin	416	1	<0.05			<0.05	<0.05
	451	1	<0.05			<0.05	<0.05
Titanium	416	1	<0.05			<0.05	<0.05
	451	1	<0.05			<0.05	<0.05
Vanadium	416	1	<0.05			<0.05	<0.05
	451	1	<0.05			<0.05	<0.05
Yttrium	416	1	<0.05			<0.05	<0.05
	451	1	<0.05			<0.05	<0.05

Table V-12 (Continued)

SECONDARY LEAD SAMPLING DATA
HAND WASH
RAW WASTEWATER

Pollutants(a)	Stream Code	Sample Type	Concentrations (mg/l, Except as Noted) Source	Day 1	Day 2	Day 3	Average
Conventional Pollutants							
Oil and Grease	416	1	5.4			330	330
	451	1	<1			<1	<1
Total Suspended Solids (TSS)	416	1	<1			14	14
	451	1	9.0			490	490
pH (standard units)	416	1	7.0			8.0	
	451	1	7.0			8.0	

(a) The toxic organic fractions were not analyzed for these streams.

NA - not analyzed

Table V-13

SECONDARY LEAD SAMPLING DATA
RESPIRATOR WASH
RAW WASTEWATER

Pollutants(a)	Stream Code	Sample Type	Concentrations (mg/l, Except as Noted) Source	Day 1	Day 2	Day 3	Average
Toxic Pollutants							
114. antimony	415	1	<0.01			<0.01	<0.01
	453	1	<0.01		<0.01		<0.01
	454	1	<0.01		0.06		0.06
115. arsenic	415	1	<0.01			<0.01	<0.01
	453	1	<0.01		<0.01		<0.01
	454	1	<0.01		0.03		0.03
117. beryllium	415	1	<0.005			<0.05	<0.05
	453	1	<0.005		<0.005		<0.005
	454	1	<0.005		<0.005		<0.005
118. cadmium	415	1	<0.02			<0.02	<0.02
	453	1	<0.02		<0.02		<0.02
	454	1	<0.02		0.04		0.04
119. chromium (total)	415	1	<0.02			0.62	0.62
	453	1	<0.02		<0.02		<0.02
	454	1	<0.02		<0.02		<0.02
120. copper	415	1	0.15			0.5	0.5
	453	1	0.15		0.3		0.3
	454	1	0.15		0.4		0.4
122. lead	415	1	<0.05			5.9	5.9
	453	1	<0.05		0.3		0.3
	454	1	<0.05		5.15		5.15
124. nickel	415	1	<0.05			0.4	0.4
	453	1	<0.05		<0.05		<0.05
	454	1	<0.05		<0.05		<0.05
128. zinc	415	1	<0.02			0.52	0.52
	453	1	<0.02		0.3		0.3
	454	1	<0.02		1.04		1.04

Table V-13 (Continued)

SECONDARY LEAD SAMPLING DATA
RESPIRATOR WASH
RAW WASTEWATER

Pollutants(a)	Stream Code	Sample Type	Concentrations (mg/l, Except as Noted) Source	Day 1	Day 2	Day 3	Average
Nonconventional Pollutants							
Aluminum	415	1	<0.1			<0.1	<0.1
	453	1	0.1		<0.1		<0.1
	454	1	0.1		<0.1		<0.1
Ammonia	415	1	NA			NA	
	453	1	NA			NA	
	454	1	NA			NA	
Barium	415	1	0.05			<0.05	<0.05
	453	1	<0.5		<0.05		<0.05
	454	1	<0.5		<0.05		<0.05
Boron	415	1	<0.1			<0.1	<0.1
	453	1	<0.1		<0.1		<0.1
	454	1	<0.1		<0.1		<0.1
Calcium	415	1	51.5			39.5	39.5
	453	1	93.2		85.5		85.5
	454	1	93.2		91.3		91.3
Cobalt	415	1	<0.05			<0.05	<0.05
	453	1	<0.05		<0.05		<0.05
	454	1	<0.05		<0.05		<0.05
Iron	415	1	<0.05			0.35	0.35
	453	1	<0.05		<0.05		<0.05
	454	1	<0.05		0.35		0.35
Magnesium	415	1	22.3			15.2	15.2
	453	1	27.2		25.3		25.3
	454	1	27.2		25.3		25.3
Manganese	415	1	<0.05			<0.05	<0.05
	453	1	<0.05		<0.05		<0.05
	454	1	<0.05		<0.05		<0.05

Table V-13 (Continued)

SECONDARY LEAD SAMPLING DATA
RESPIRATOR WASH
RAW WASTEWATER

Pollutants(a)	Stream Code	Sample Type	Concentrations (mg/l, Except as Noted) Source	Day 1	Day 2	Day 3	Average
Nonconventional Pollutants (Continued)							
Molybdenum	415	1	<0.05			<0.05	<0.05
	453	1	<0.05		<0.05		<0.05
	454	1	<0.05		<0.05		<0.05
Sodium	415	1	7.1			40.9	40.9
	453	1	14.9		25.6		25.6
	454	1	14.9		18.3		18.3
Tin	415	1	<0.05			<0.05	<0.05
	453	1	<0.05		<0.05		<0.05
	454	1	<0.05		<0.05		<0.05
Titanium	415	1	<0.05			<0.05	<0.05
	453	1			<0.05		<0.05
	454	1			<0.05		<0.05
Vanadium	415	1	<0.05			<0.05	<0.05
	453	1			<0.05		<0.05
	454	1			<0.05		<0.05
Yttrium	415	1	<0.05			<0.05	<0.05
	453	1			<0.05		<0.05
	454	1			<0.05		<0.05
Conventional Pollutants							
Oil and Grease	415	1	5.4			5	5
	453	1	<1		6.2		6.2
	454	1	<1		NA		
Total Suspended Solids (TSS)	415	1	<1			14	14
	453	1	9.0		7.0		7.0
	454	1	9.0		21		21
pH (standard units)	415	1	7.0			7.0	
	453	1	7.0		7.0		
	454	1	7.0		7.0		

(a) The toxic organic fractions were not analyzed for these streams

NA - not analyzed

Table V-14

SECONDARY LEAD WASTEWATER SAMPLING DATA
LAUNDRY
RAW WASTEWATER

Pollutants(a)	Stream Code	Sample Type	Concentrations (mg/l, Except as Noted) Source	Day 1	Day 2	Day 3	Average
Toxic Pollutants							
114. antimony	414	1	<0.01			0.06	0.06
	452	1	<0.01			0.15	0.15
115. arsenic	414	1	<0.01			<0.01	<0.01
	452	1	<0.01			0.02	0.02
117. beryllium	414	1	<0.005			<0.005	<0.005
	452	1	<0.005			<0.005	<0.005
118. cadmium	414	1	<0.02			<0.02	<0.02
	452	1	<0.02			<0.02	<0.02
119. chromium (total)	414	1	<0.02			<0.02	<0.02
	452	1	<0.02			<0.02	<0.02
120. copper	414	1	0.15			0.25	0.25
	452	1	0.15			0.2	0.2
122. lead	414	1	<0.05			11.5	11.5
	452	1	<0.05			14.9	14.9
124. nickel	414	1	<0.05			<0.05	<0.05
	452	1	<0.05			<0.05	<0.05
128. zinc	414	1	<0.02			0.1	0.1
	452	1	<0.02			1.06	1.00
Nonconventional Pollutants							
Aluminum	414	1	<0.1			0.2	0.2
	452	1	0.1			0.3	0.3
Ammonia	414	1	NA			NA	
	452	1	NA			NA	

Table V-14 (Continued)

SECONDARY LEAD WASTEWATER SAMPLING DATA
LAUNDRY
RAW WASTEWATER

Pollutants(a)	Stream Code	Sample Type	Concentrations (mg/l, Except as Noted) Source	Day 1	Day 2	Day 3	Average
Nonconventional Pollutants (Continued)							
Barium	414	1	0.05			0.05	0.05
	452	1	<0.05			0.1	0.1
Boron	414	1	<0.1			0.2	0.2
	452	1	<0.1			<0.1	<0.1
Calcium	414	1	51.5			37.8	37.8
	452	1	93.2			94.1	94.1
Cobalt	414	1	<0.05			<0.05	<0.05
	452	1	<0.05			<0.05	<0.05
Iron	414	1	<0.05			0.55	0.55
	452	1	<0.05			1.35	1.35
Magnesium	414	1	22.3			14.8	14.8
	452	1	27.2			25.5	25.5
Manganese	414	1	<0.05			<0.05	<0.05
	452	1	<0.05			<0.05	<0.05
Molybdenum	414	1	<0.05			<0.05	<0.05
	452	1	<0.05			<0.05	<0.05
Sodium	414	1	7.1			78.9	78.9
	452	1	14.9			26.9	26.9
Tin	414	1	<0.05			<0.05	<0.05
	452	1	<0.05			<0.05	<0.05
Titanium	414	1	<0.05			<0.05	<0.05
	452	1	<0.05			<0.05	<0.05
Vanadium	414	1	<0.05			<0.05	<0.05
	452	1	<0.05			<0.05	<0.05
Yttrium	414	1	<0.05			<0.05	<0.05
	452	1	<0.05			<0.05	<0.05

Table V-14 (Continued)

SECONDARY LEAD WASTEWATER SAMPLING DATA
LAUNDRY
RAW WASTEWATER

Pollutants(a)	Stream Code	Sample Type	Concentrations (mg/l, Except as Noted) Source	Day 1	Day 2	Day 3	Average
Conventional Pollutants							
Oil and Grease	414	1	5.4			8.4	8.4
	452	1	<1			90	90
Total Suspended Solids (TSS)	414	1	<1			160	160
	452	1	9.0			110	110
pH (standard units)	414	1	7.0			6.0	
	452	1	7.0			6.0	

(a) The toxic organic fractions were not analyzed for these streams

NA - not analyzed

Table V-15

SECONDARY LEAD WASTEWATER SAMPLING DATA
MISCELLANEOUS
RAW WASTEWATER

	Pollutants(a)	Stream Code	Sample Type	Concentrations (mg/l, Except as Noted) Source	Day 1	Day 2	Day 3	Average
Toxic Pollutants								
23.	chloroform	20	1		0.024	0.012	0.018	0.018
		75	2		0.049	0.018	0.079	0.047
39.	fluoranthene	75	6	*	0.027			0.027
44.	methylene chloride	20	1		0.06	ND	ND	0.06
56.	nitrobenzene	20	7		ND			
		108	2		0.016			0.016
66.	bis(2-ethylhexyl) phthalate	20	7		0.027			0.027
		75	6	0.575	0.865			0.865
		108	2		0.031			0.031
67.	butyl benzyl phthalate	75	6	*	0.089			0.089
68.	di-n-butyl phthalate	20	7		0.031			0.031
		108	2		0.014			0.014
69.	di-n-octyl phthalate	75	6	*	0.019			0.019
76.	chrysene (b)	20	7		<0.04			<0.04
		75	6	ND	0.139			0.139
		108	2		ND			
78.	anthracene (c)	20	7		<0.04			<0.04
81.	phenanthrene (c)	108	2		*			*
84	pyrene	75	6	*	0.038			0.038
87.	trichloroethylene	20	1		ND	*	<0.27	*
114.	antimony	20	7		16			16
		75	6	<0.1	45			45
		76	1	<0.1	0.6			0.6
		77	1	<0.1	11			11
		108	2		83			83
		411	8	<0.01	21	13	12	15
		413	8	<0.01	45	120	110	91

Table V-15 (Continued)

SECONDARY LEAD WASTEWATER SAMPLING DATA
MISCELLANEOUS
RAW WASTEWATER

Pollutants(a)	Stream Code	Sample Type	Concentrations (mg/l, Except as Noted) Source	Day 1	Day 2	Day 3	Average
Toxic Pollutants (Continued)							
115. arsenic	20	7		3			3
	75	6	<0.01	6.4			6.4
	76	1	<0.01	0.01			0.01
	77	1	<0.01	1.2			1.2
	108	2		16			16
	411	8	<0.01	4.9	2.8	1.7	3.1
	413	8	<0.01	14	34	14	20
117. beryllium	411	8	<0.005	<0.05	<0.05	<0.05	<0.05
	413	8	<0.005	<0.005	<0.05	<0.005	<0.02
118. cadmium	411	8	<0.02	21.6	6	2.6	10
	413	8	<0.02	38.1	103	33.8	58.3
119. chromium (total)	411	8	<0.02	0.2	<0.2	<0.2	0.06
	413	8	<0.02	0.66	1.6	0.96	1.07
120. copper	20	7		3			3
	75	6	0.01	3		<0.006	3
	108	2		10			10
	411	8	0.15	6.5	3.5	1.5	3.8
	413	8	0.15	41.6	36.5	23.9	34
121. cyanide	20	7		<0.001	<0.001	0.004	0.002
	75	6		0.007	0.006	0.013	0.0087
	108	2		0.006			0.006
122. lead	20	7		7			7
	75	6	0.05	80		<0.02	40
	108	2		7			7
	175	1		9.9			9
	411	8	<0.05	15.5	14.0	21.0	16.8
	413	8	<0.05	13.9	14.5	10.6	13.0
123. mercury	20	7		0.006			0.006
	75	6	0.0001	0.0007		<0.0001	0.0004
	108	2		0.0126			0.0126

Table V-15 (Continued)

SECONDARY LEAD WASTEWATER SAMPLING DATA
MISCELLANEOUS
RAW WASTEWATER

Pollutants(a)	Stream Code	Sample Type	Concentrations (mg/l, Except as Noted) Source	Day 1	Day 2	Day 3	Average
Toxic Pollutants (Continued)							
124. nickel	20	7		1			1
	75	6	<0.005	<0.9		<0.005	<0.45
	108	2		2			2
	411	8	<0.05	5	2.5	1.5	3
	413	8	<0.05	17.3	48	24.6	29.9
126. silver	20	7		<0.25			<0.25
	75	6	<0.02	0.04			0.04
	76	1	<0.02	<0.02			<0.02
	77	1	<0.02	<0.02			<0.02
	108	2		0.07			0.07
127. thallium	20	7		<0.05			<0.05
	75	6	<0.1	0.3			0.3
	76	1	<0.1	<0.1			<0.1
	77	1	<0.1	<0.1			<0.1
	108	2		0.5			0.5
128. zinc	20	7		3			3
	75	6	0.1	4		0.6	2.3
	108	2		20			20
	411	8	<0.02	38.4	14.6	5.8	19.6
	413	8	<0.02	97.9	120	67.2	95.0
Nonconventional Pollutants							
aluminum	411	8	<0.1	24	17	15	18
	413	8	<0.1	52.3	94	66.4	70.9
ammonia	20	1		4.86	25.08	6.42	12.12
	413	8	NA	NA	7	<0.02	3.5
barium	411	8	0.05	<0.5	<0.5	<0.5	<0.5
	413	8	0.05	<0.5	<0.5	<0.5	<0.5
boron	411	8	<0.1	2	2	<1	1.3
	413	8	<0.1	5.7	12	9.5	9.0
calcium	411	8	51.5	754	471	639	621
	413	8	51.5	52.8	437	635	374

Table V-15 (Continued)

SECONDARY LEAD WASTEWATER SAMPLING DATA
MISCELLANEOUS
RAW WASTEWATER

Pollutants(a)	Stream Code	Sample Type	Concentrations (mg/l, Except as Noted) Source	Day 1	Day 2	Day 3	Average
Nonconventional Pollutants (Continued)							
chemical oxygen demand (COD)	20	7		65			65
	75	2		152			152
	108	2		144			144
cobalt	411	8	<0.05	<0.5	<0.5	<0.5	<0.5
	413	8	<0.05	0.4	1	0.6	0.6
iron	411	8	<0.05	173	129	67.5	123
	413	8	<0.05	754	1,170	982	968
magnesium	411	8	22.3	4,390	7,040	7,390	6,270
	413	8	22.3	258	233	234	241
manganese	411	8	<0.05	2.5	2	2	2.1
	413	8	<0.05	1.35	2	1.45	1.6
molybdenum	411	8	<0.05	<0.5	<0.5	<0.5	<0.5
	413	8	<0.05	<0.05	<0.5	<0.05	<0.2
phenols (total; by 4-AAP method)	20	1		0.007	0.012	0.006	0.0083
	75	2		0.006	0.018	0.01	0.011
	108	2		0.01			0.01
sodium	411	8	7.1	661	559	538	586
	413	8	7.1	1,170	1,420	823	1,140
tin	411	8	<0.05	<5	<5	<5	<5
	413	8	<0.05	<0.5	<5	<0.5	<2
titanium	411	8	<0.05	2.5	2	0.5	1.6
	413	8	<0.05	5.7	3.5	5.25	4.8
total organic carbon (TOC)	20	7		4			4
	75	2		44			44
	108	2		70			70

Table V-15 (Continued)

SECONDARY LEAD WASTEWATER SAMPLING DATA
MISCELLANEOUS
RAW WASTEWATER

Pollutants(a)	Stream Code	Sample Type	Concentrations (mg/l, Except as Noted) Source	Day 1	Day 2	Day 3	Average
Nonconventional Pollutants (Continued)							
vanadium	411	8	<0.05	<0.5	<0.5	<0.5	<0.5
	413	8	<0.05	0.1	<0.5	0.15	0.08
yttrium	411	8	<0.05	<0.5	<0.5	<0.5	<0.5
	413	8	<0.05	<0.05	<0.5	<0.05	<0.2
Conventional Pollutants							
oil and grease	20	1		76	23	22	40.3
	75	2		23	36	16	25
	108	1		7			7
	411	1	5.4	14	4.1	62/18[d]	19.3
	413	1	5.4	3.3	9,900	3,000	4,300
total suspended solids (TSS)	20	7		428			428
	75	2		1,122			1,122
	108	2		836			836
	175	1		<1			<1
	411	8	<1	680	140	490/1,330[d]	650
	413	8	<1	4,600	6,700	8,530	6,600
pH (standard units)	20	1		1.2	1.2	2.2	
	75	1		2	3	2	
	108	1		0.8			
	411	8	7.0	1	3.2	2.5	
	413	8	7.0	1.1	1	1	

(a) One sample was analyzed for the acid extractable toxic organic pollutants, and eight samples were analyzed for the pesticide fraction; none of these pollutants was reported present above its analytical quantification limit. No toxic organic fractions were analyzed for streams 411 and 413.

(b) Chrysene, in stream code 20 only, is reported with anthracene and phenanthrene.

(c) Reported together.

(d) These data represent duplicate analyses for oil and grease and total suspended solids.

NA - not analyzed

Table V-16

SECONDARY LEAD WASTEWATER SAMPLING DATA
TREATMENT PLANT SAMPLES - PLANT A

	Pollutants	Stream Code	Sample Type	Concentrations (mg/l, Except as Noted) Source	Day 1	Day 2	Day 3	Average
Toxic Pollutants								
23.	chloroform	74	2		0.017	0.015	0.037	0.023
66.	bis(2-ethylhexyl) phthalate	74	6	0.575	0.021			0.021
67.	butyl benzyl phthalate	74	6	*	ND	ND		
69.	di-n-octyl phthalate	74	6	*	ND	ND		
114.	antimony	74	6	<0.1	20			20
115.	arsenic	74	6	<0.01	2.9			2.9
117.	beryllium	74	6	<0.001	<0.01	<0.001		<0.0055
118.	cadmium	74	6	0.03	0.4	<0.002		0.4
119.	chromium	74	6	<0.005	0.2	0.03		0.12
120.	copper	74	6	0.01	1	0.2		0.6
121.	cyanide	74	6		<0.001	<0.001	<0.001	<0.001
122.	lead	74	6	0.05	6	0.2		3.1
12[illegible].	mercury	74	6	0.0001	0.0004	0.0004		0.0004
124.	nickel	74	6	<0.005	0.6	<0.005		0.6
26.	silver	74	6	<0.02	<0.02			<0.02
127.	thallium	74	6	<0.1	0.2			0.2
128.	zinc	74	6	0.1	3	0.7		1.85

Table V-16 (Continued)

SECONDARY LEAD WASTEWATER SAMPLING DATA
TREATMENT PLANT SAMPLES - PLANT A

Pollutants	Stream Code	Sample Type	Concentrations (mg/l, Except as Noted) Source	Day 1	Day 2	Day 3	Average
Nonconventional							
chemical oxygen demand (COD)	74	2		32			32
chloride	74	2		309			309
phenols (total; by 4AAP method)	74	2		0.008	0.01	0.007	0.008
total organic carbon (TOC)	74	2		19			19
Conventional							
oil and grease	74	2		3	ND	28	15.5
total suspended solids (TSS)	74	2		351			351
pH (standard units)	74	1		2	3	4	

Table V-17

SECONDARY LEAD WASTEWATER SAMPLING DATA
TREATMENT PLANT SAMPLES - PLANT B

Pollutants	Stream Code	Sample Type	Concentrations (mg/l, Except as Noted) Source	Day 1	Day 2	Day 3	Average
Toxic Pollutants							
114. antimony	206	2		1.22			1.22
	207	2		1.13			1.13
118. cadmium	206	2		0.03			0.03
	207	2		0.11			0.11
119. chromium	206	2		0.09			0.09
	207	2		0.09			0.09
120. copper	206	2		0.04			0.04
	207	2		0.16			0.16
122. lead	206	2		0.27			0.27
	207	2		11.7			11.7
123. mercury	206	2		<0.0002			<0.0002
	207	2		0.00066			0.00066
124. nickel	206	2		0.15			0.15
	207	2		0.14			0.14
128. zinc	206	2		0.06			0.06
	207	2		0.58			0.58
Nonconventional							
phenols (total: by 4-AAP method)	206	5		<0.004			<0.004
	207	5		<0.004			<0.004
Conventional							
total suspended solids (TSS)	206	5		0.01			0.01
	207	5		0.05			0.05
pH (standard units)	206	5		8.3			
	207	5		1.4			

Table V-18

SECONDARY LEAD WASTEWATER SAMPLING DATA
TREATMENT PLANT SAMPLES - PLANT C

Pollutants	Stream Code	Sample Type	Concentrations (mg/l, Except as Noted) Source	Day 1	Day 2	Day 3	Average
Toxic Pollutants							
23. chloroform	107	2		0.028	0.03		0.03
30. 1,2-trans-dichloro-ethylene	107	2		0.026	0.013		0.0195
66. bis(2-ethylhexyl) phthalate	107	2		0.0199	0.022		0.0205
87. trichloroethylene	107	2		<0.02800	*		*
114. antimony	107	2		<0.1000	1.1		0.5
	109	1		0.7			0.7
118. cadmium	107	2		0.02	<0.002		0.02
119. chromium	107	2		0.07	0.04		0.055
120. copper	107	2		0.02	0.03		0.025
121. cyanide	107	2		0.001	<0.001		0.001
122. lead	107	2		0.2	0.2		0.2
123. mercury	107	2		<0.1	<0.1		<0.1
124. nickel	107	2		0.02	<0.005		0.01
127. thallium	107	2		<0.1	0.1		0.1
128. zinc	107	2		0.1	0.1		0.1
Nonconventional							
chemical oxygen demand (COD)	107	2		55	63		59
total organic carbon (TOC)	107	2		21	48		34.5
phenols (total; by 4-AAP method)	107	2		0.006	0.004		0.005

Table V-18 (Continued)

SECONDARY LEAD WASTEWATER SAMPLING DATA
TREATMENT PLANT SAMPLES - PLANT C

Pollutants	Stream Code	Sample Type	Concentrations (mg/l, Except as Noted) Source	Day 1	Day 2	Day 3	Average
Conventional							
oil and grease	107	1		4	5		4.5
total suspended solids (TSS)	107	2		51	84		67.5
pH (standard units)	107	1		8.8			8.8

Page Intentionally Blank

Table V-19 (Continued)

SECONDARY LEAD WASTEWATER SAMPLING DATA
TREATMENT PLANT SAMPLES - PLANT D

Pollutants	Stream Code	Sample Type	Concentrations (mg/l, Except as Noted)				
			Source	Day 1	Day 2	Day 3	Average
Conventional							
oil and grease	21	1		6	6	4	5
total suspended solids (TSS)	21	1		177			177
pH (standard units)	21	1		8.5	8.6	6.8	

Table V-20

SECONDARY LEAD WASTEWATER SAMPLING DATA
TREATMENT PLANT SAMPLES - PLANT E

Pollutants	Stream Code	Sample Type	Source	Concentrations (mg/l, Except as Noted) Day 1	Day 2	Day 3	Average
Toxic Pollutants							
66. bis(2-ethylhexyl) phthalate	153	2		*	*		*
	154	1		*	0.02	*	0.0067
	155	1		0.02	*	*	0.067
	156	2		*	*	0.1	0.033
68. di-n-butyl phthalate	153	2		ND	ND		
	154	1		ND	ND	ND	
	155	1		*	ND	ND	*
	156	2		ND	ND	ND	ND
76. chrysene	155	1		*	ND	*	*
	156	2		ND	ND	ND	
78. anthracene (a)	155	1		*	*	*	*
81. phenanthrene (a)	156	2		ND	ND	ND	
114. antimony	153	2		0.2	0.3		0.25
	154	1		0.3	1.3	1.4	1
	156	2		9	1.5	0.5	3.7
115. arsenic	153	2		0.03	0.16		0.095
	155	1		200	160	88	149.3
	156	2		18	18	4	13.3
17. beryllium	153	2		0.03	<0.001		<0.03
	154	1		0.001	0.004	0.001	0.002
	155	1		<0.001	<0.001	0.001	0.0003
	156	2		0.002	0.002	0.001	0.017
118. cadmium	153	1		0.048	0.046		0.047
	154	1		0.04	0.08	0.12	0.08
	155	1		0.29	0.039	0.028	0.119
	156	2		1.8	2.4	1.7	2.0
119. chromium	153	2		0.02	0.035		0.28
	154	1		0.003	0.006	0.006	0.005
	155	1		0.002	0.001	0.001	0.0013
	156	2		0.2	0.19	0.21	0.2
120. copper	153	2		0.07	0.08		0.075
	154	1		0.07	0.17	0.25	0.163
	155	1		0.2	0.07	0.06	0.11
	156	2		4.5	4.9	3.6	4.3

Table V-20 (Continued)

SECONDARY LEAD WASTEWATER SAMPLING DATA
TREATMENT PLANT SAMPLES - PLANT E

Pollutants	Stream Code	Sample Type	Source	Concentrations (mg/l, Except as Noted) Day 1	Day 2	Day 3	Average
122. lead	153	3		1.7	0.72		1.21
	154	1		0.19	0.42	0.69	0.43
	155	1		40	39	36	38.3
	156	2		11	7.8	7.6	8.8
123. mercury	153	2		0.0003	0.0004		0.00035
	154	1		0.0004	0.0004	0.0003	0.00036
	155	1		0.0014	0.001	0.0006	0.001
	156	2		0.0009	0.0006	0.0008	0.0008
124. nickel	153	2		0.16	0.111		0.135
	154	1		0.13	0.12	0.13	0.1267
	155	1		0.11	0.07	0.001	0.0604
	156	2		0.92	0.9	1.1	0.973
126. silver	153	2		0.001	0.03		0.015
	154	1		0.008	0.002	0.002	0.004
	155	1		0.002	0.002	0.006	0.003
	156	2		0.004	0.009	0.014	0.009
127. thallium	155	1		<0.001	<0.001	<9.001	<0.001
	156	2		0.009	0.003	0.002	0.004
128. zinc	153	2		0.18	0.09		0.135
	154	1		0.08	0.17	0.3	0.183
	155	1		0.17	0.03	0.07	0.09
	156	2		5.2	5.5	3.4	4.7
Nonconventional							
ammonia	153	2		0.11	3.4		1.75
	154	1		0.01	2	1.9	1.3
	155	1		19	27	27	24
	156	2		0.02	3.2	2	1.7
Conventional							
total suspended solids (TSS)	153	2		730	180		455
	154	1		24	23	45	30.7
	155	1		72	98	120	97
	156	2		59	42	27	43
pH (standard units)	153	1		11	8.6		
	154	1		11	3.6	3.9	
	155	1		7.6	4.2	7.6	
	156	1		1.6	1.5	2.3	

(a) Measured together

Table V-21

SECONDARY LEAD WASTEWATER SAMPLING DATA
TREATED WASTEWATER SAMPLES - PLANT G

Pollutants(a)	Stream Code	Sample Type	Concentrations (mg/l, Except as Noted) Source	Day 1	Day 2	Day 3	Average
Toxic Pollutants							
4. benzene	402	1	*	*	*	*	*
	403	1		*	*	*	*
	404	1		*	*	*	*
	405	1		*	*	*	*
6. carbon tetrachloride	403	1		ND	*	*	*
	404	1	*	*	*	*	*
10. 1,2-dichloroethane	402	1	*	ND	ND	*	*
	403	1		ND	ND	*	*
	404	1		ND	ND	*	*
	405	1		ND	*	ND	*
13. 1,1-dichloroethane	403	1		ND	*	ND	*
15. 1,1,2,2-tetrachloro-ethane	405	1	ND	*	ND	*	*
21. 2,4,6-trichlorophenol	403	3		*	ND	ND	*
	404	3		*	ND	ND	*
	405	3		*	ND	ND	*
23. chloroform	402	1	*	*	*	*	*
	403	1		*	*	*	*
	404	1		*	*	*	*
	405	1		*	*	*	*
29. 1,1-dichloroethylene	403	1		ND	*	ND	*
34. 2,4-dimethylphenol	404	3		*	ND	ND	*
	405	3		*	ND	ND	*
38. ethylbenzene	402	1	*	ND	*	*	*
	403	1		*	*	*	*
	404	1		*	*	*	*
	405	1		*	*	ND	*

Table V-21 (Continued)

SECONDARY LEAD WASTEWATER SAMPLING DATA
TREATED WASTEWATER SAMPLES - PLANT G

Pollutants(a)	Stream Code	Sample Type	Concentrations (mg/l, Except as Noted) Source	Day 1	Day 2	Day 3	Average
Toxic Pollutants (Continued)							
39. fluoranthene	402	3	*	*	*	*	*
	403	3		*	*	*	*
	404	3		*	*	*	*
	405	3		ND	*	ND	*
44. methylene chloride	402	1	*	*	*	*	*
	403	1		*	*	*	*
	404	1		*	*	*	*
	405	1		*	*	*	*
47. bromoform (tribromomethane)	402	1	ND	ND	*	*	*
	403	1		ND	*	*	*
	404	1		ND	*	*	*
	405	1		ND	*	*	*
48. dichlorobromomethane	402	1	ND	ND	ND	*	*
	404	1		ND	ND	*	*
49. trichlorofluoromethane	402	1	ND	ND	ND	*	*
	403	1		*	ND	*	*
	404	1		ND	*	*	*
	405	1		*	ND	ND	*
55. naphthalene	402	3	ND	ND	NA	*	*
	404	3		ND	*	ND	*
57. 2-nitrophenol	402	3	ND	*	ND	ND	*
	404	3		*	ND	ND	*
	405	3	ND	*	ND	ND	*
65. phenol	402	3	*	*	NA	*	*
	403	3		*	*	*	*
	404	3		*	*	*	*
	405	3		*	*	*	*

Table V-21 (Continued)

SECONDARY LEAD WASTEWATER SAMPLING DATA
TREATED WASTEWATER SAMPLES - PLANT G

Pollutants(a)	Stream Code	Sample Type	Concentrations (mg/l, Except as Noted) Source	Day 1	Day 2	Day 3	Average
Toxic Pollutants (Continued)							
66. bis(2-ethylhexyl) phthalate	402	3	0.009	0.160	0.160	0.099	0.140
	403	3		*	*	*	*
	404	3		*	*	*	*
	405	3		*	*	*	*
67. butyl benzyl phthalate	402	3	ND	*	0.010	*	*
	403	3		*	*	*	*
	404	3		*	*	*	*
	405	3		*	*	*	*
68. di-n-butyl phthalate	402	3	*	*	*	*	
	403	3		*	*	*	*
	404	3		*	NA	*	*
	405	3		*	*	*	*
69. di-n-octyl phthalate	402	3	ND	0.010	0.010	*	*
	404	3		ND	*	*	*
70. diethyl phthelate	402	3	ND	ND	*	*	*
	404	3		ND	*	ND	*
72. benzo(a)anthracene	402	3	*	ND	*	*	*
	403	3		*	ND	*	*
	404	3		*	*	*	*
	405	3		*	*	*	*
76. chrysene	402	3	*	*	*	*	*
	403	3		*	*	*	*
	404	3		*	*	*	*
	405	3		*	*	*	*
78. anthracene (b)	402	3	*	*	*	*	*
	403	3		*	*	*	*
	404	3		*	*	*	*
	405	3		*	*	*	*

Table V-21 (Continued)

SECONDARY LEAD WASTEWATER SAMPLING DATA
TREATED WASTEWATER SAMPLES - PLANT G

Pollutants(a)	Stream Code	Sample Type	Concentrations (mg/l, Except as Noted) Source	Day 1	Day 2	Day 3	Average
Toxic Pollutants (Continued)							
80. fluorene	402	3	*	*	*	*	*
	403	3		*	*	*	*
	404	3		NA	*	*	*
	405	3		*	*	*	*
81. phenanthrene (b)	402	3	*	*	*	*	*
	403	3		*	*	*	*
	404	3		*	*	*	*
	405	3		*	*	*	*
84. pyrene	402	3	*	*	*	*	*
	403	3		*	*	ND	*
	404	3		*	*	*	*
85. tetrachloroethylene	403	1	*	ND	ND	*	*
	404	1		ND	ND	*	*
86. toluene	402	1	*	*	*	*	*
	403	1		*	*	*	*
	404	1		*	*	*	*
	405	1		*	*	*	*
87. trichloroethylene	402	1	*	ND	ND	*	*
	403	1		ND	ND	*	*
	404	1		*	*	*	*
89. aldrin	403	3		ND	*	ND	*
	404	3		*	ND	ND	*
93. 4,4'-DDE	403	3		ND	**	ND	**
95. alpha-endosulfan	402	3	ND	ND	**	ND	**
97. endosulfan sulfate	402	3	**	ND	**	ND	**
	403	3		ND	**	**	**
	404	3		**	**	**	**
	405	3		**	**	**	**

Table V-21 (Continued)

SECONDARY LEAD WASTEWATER SAMPLING DATA
TREATED WASTEWATER SAMPLES - PLANT G

Pollutants(a)	Stream Code	Sample Type	Concentrations (mg/l, Except as Noted) Source	Day 1	Day 2	Day 3	Average
Toxic Pollutants (Continued)							
103. beta-BHC	402	3	ND	ND	**	ND	**
	403	3		**	ND	ND	**
	405	3		**	ND	ND	**
104. gamma-BHC	403	3		ND	**	ND	**
	405	3		**	**	ND	**
105. delta-BHC	402	3	ND	ND	**	ND	**
114. antimony	402	3	5.700	<0.001	9.400	7.400	5.6
	403	3		5.300	7.200	9.8[d]	7.4
	404	3		0.990	6.700	7.100	4.9
	405	3		9.800[b]	2.900	4.1	5.6
115. arsenic	402	3	0.067	6.000	<0.005[c]	1.000	2.333
	403	3		2.000	<0.005[c]	3.7	1.9
	404	3		0.650[b]	0.47	0.860	0.66
	405	3		0.022	1.400	1.4	0.940
117. beryllium	402	3	<0.001	0.002	<0.001	<0.001	0.001
	403	3		<0.001	<0.001	<0.001	<0.001
	404	3		<0.001	<0.001	<0.001	<0.001
	405	3		<0.001[b]	<0.001	<0.001	<0.001
118. cadmium	402	3	0.003	8.1	3.2	3.4	4.9
	403	3		4.5	2.4	2.7[b]	3.2
	404	3		2.9	2.8	2.2	2.6
	405	3		2.4[b]	2.4	2.2	2.3
119. chromium (total)	402	3	0.005	0.96	0.70	0.57	0.74
	403	3		0.060	0.009	0.004[b]	0.024
	404	3		0.082	0.039	0.017	0.046
	405	3		0.006[b]	0.012	0.012	0.01
120. copper	402	3	0.05	3.2	3.0	2.4	2.8
	403	3		2.4	1.6	2.0[b]	2.0
	404	3		1.8	1.7	2.0[b]	1.8
	405	3		1.5	1.4	1.6	1.5

Table V-21 (Continued)

SECONDARY LEAD WASTEWATER SAMPLING DATA
TREATED WASTEWATER SAMPLES - PLANT G

Pollutants(a)	Stream Code	Sample Type	Concentrations (mg/l, Except as Noted) Source	Day 1	Day 2	Day 3	Average
Toxic Pollutants (Continued)							
121. cyanide (total)	402	1	0.0074	0.0094	0.023	0.011	0.014
	403	1		0.0074	<0.001[b]	0.0035	0.0036
	404	1		0.0035	<0.001	0.0015	0.0016
	405	1		0.0045[b]	0.0015	<0.001	0.002
122. lead	402	3	0.008	11	92	52	51
	403	3		16	8.4	5.1[b]	9.8
	404	3		12	5.9	13	43
	405	3		0.83	0.40	0.55	0.59
123. mercury	402	3	<0.0002	0.0014	0.0016	0.0017	0.0015
	403	3		0.027	0.017	0.0047	0.016
	404	3		0.030	0.015[b]	0.015[b]	0.020
	405	3		<0.0002	0.0037	0.0069	0.004
124. nickel	402	3	<0.001	4.2	2.5	1.8	2.8
	403	3		3.1	1.6	2.1[b]	2.2
	404	3		1.7	1.9	1.5	1.7
	405	3		1.7[b]	1.8	1.6	1.7
125. selenium	402	3	8.8	9.5	9.7	12	10
	403	3		11	11	14[b]	12
	404	3		12	12	13	12
	405	3		11[b]	9.9	12	10
126. silver	402	3	0.02	0.02	0.02	0.03	0.02
	403	3		0.02	<0.001	0.02[b]	0.01
	404	3		0.02	<0.001	<0.001	0.006
	405	3		<0.001[b]	<0.001	<0.001	<0.001
127. thallium	402	3	<0.001	0.38	0.35	0.40	0.37
	403	3	3	0.23	0.22	0.38	0.27
	404	3		0.051	0.20	0.25	0.16
	405	3		0.22	0.20	0.25	0.22

Table V-21 (Continued)

SECONDARY LEAD WASTEWATER SAMPLING DATA
TREATED WASTEWATER SAMPLES - PLANT G

Pollutants(a)	Stream Code	Sample Type	Concentrations (mg/l, Except as Noted) Source	Day 1	Day 2	Day 3	Average
Toxic Pollutants (Continued)							
128. zinc	402	3	0.04	2.0	1.5	1.4	1.6
	403	3		0.80	0.68	0.92[b]	0.8
	404	3		0.81	0.74	0.73	0.76
	405	3		0.38	0.42	0.60	0.46
Nonconventional Pollutants							
Alkalinity	402	3	160	0	0	0	0
	403	3		180	80[b]	0[b]	86
	404	3		260	280	120	220
	405	3		500[b]	240	0	246
Ammonia	402	3	2.1	11,000	15,000	12,000	12,700
	403	3		7,200[b]	6,800	5,700	6,600
	404	3		7,200	5,700	6,000	6,300
	405	3		7,200	6,500	5,100	6,300
Calcium	402	3	23	6.1	63	6.0	25
	403	3		27	32	23	27
	404	3		34	3.9	3.6	13
	405	3		36[b]	7.2	7.9	17
Chemical Oxygen Demand (COD)	402	3	<1	440	300	360	370
	403	3		400[b]	120	380	300
	404	3		320	160	240	240
	405	3		130	130	200[b]	153
Magnesium	402	3	11	42	37	28	35
	403	3		19	22	30	23
	404	3		21	25	25	23
	405	3		22[b]	20	23	21
Phenolics	402	1	<0.001	<0.001	0.170	<0.001	0.056
	403	1		<0.001	<0.001	<0.001[b]	<0.001
	404	1		<0.001	<0.001	<0.001	<0.001
	405	1		<0.001	<0.001	<0.001	<0.001

Table V-21 (Continued)

SECONDARY LEAD WASTEWATER SAMPLING DATA
TREATED WASTEWATER SAMPLES - PLANT G

Pollutants(a)	Stream Code	Sample Type	Concentrations (mg/l, Except as Noted) Source	Day 1	Day 2	Day 3	Average
Nonconventional Pollutants (Continued)							
Sulfate	402	3	55	860	940	670	820
	403	3		780	780	720	760
	404	3		800	810	810	810
	405	3		870	860	840	860
Conventional Pollutants							
Oil and Grease	402	1	7.3	53	54	63	56
	403	1		7.3	17	20	14
	404	1		5.4	21	20	15
	405	1		7.6	13	6	8.8
Total Suspended Solids (TSS)	402	3	22	1,400	830	800	1,010
	403	3		250	150	240	210
	404	3		340	170	240	250
	405	3		110	140	280	180
pH	402	1	6.9	7.1	6.7	7.0	
	403	1		7.3	6.3	6.4	
	404	1		7.7	7.6	7.2	
	405	1		7.7	7.7	7.5	

(a) Three samples for each stream were analyzed for all toxic organic pollutants.

(b) Average of duplicate analysis

(c) Chemical matrix interference

NA - not analyzed

Table V-22

SECONDARY LEAD WASTEWATER SAMPLING DATA
TREATED WASTEWATER SAMPLES - PLANT H

	Pollutants(a)	Stream Code	Sample Type	Concentrations (mg/l, Except as Noted) Source	Day 1	Day 2	Day 3	Average
Toxic Pollutants								
114.	antimony	418	2	<0.01	2.1	3.6	7	4.2
		419	3	<0.01	1.3	1.6	1.7	1.5
		420	3	<0.01	1.4	1.5	2.4	1.7
115.	arsenic	418	2	<0.01	0.42	0.54	0.94	0.63
		419	3	<0.01	<0.01	<0.01	<0.01	<0.01
		420	3	<0.01	0.1	<0.01	<0.01	0.03
117.	beryllium	418	2	<0.005	<0.05	<0.05	<0.05	<0.05
		419	3	<0.005	<0.005	<0.05	<0.05	<0.04
		420	3	<0.005	<0.005	<0.05	<0.05	<0.04
118.	cadmium	418	2	<0.02	1.8	1.6	2	1.8
		419	3	<0.02	0.04	<0.2	<0.2	0.01
		420	3	<0.02	0.04	<0.2	<0.2	0.01
119.	chromium (total)	418	2	<0.02	<0.2	<0.2	<0.2	<0.2
		419	3	<0.02	<0.02	<0.2	<0.2	<0.14
		420	3	<0.02	<0.02	<0.2	<0.2	<0.14
120.	copper	418	2	0.15	0.5	1	2.5	1.3
		419	3	0.15	0.05	<0.5	<0.5	0.02
		420	3	0.15	0.05	<0.5	<0.5	0.02
122.	lead	418	2	<0.05	25	21.0	41.0	29
		419	3	<0.05	0.1	0.07	0.19	0.12
		420	3	<0.05	0.1	0.260	0.15	0.17
124.	nickel	418	2	<0.05	0.5	0.5	1.5	0.8
		419	3	<0.05	<0.05	<0.5	<0.5	<0.4
		420	3	<0.05	<0.05	<0.5	<0.5	<0.4
128.	zinc	418	2	<0.02	3.2	2.6	10.8	5.5
		419	3	<0.02	<0.02	<0.2	<0.2	<0.14
		420	3	<0.02	<0.02	<0.2	<0.2	<0.14

Table V-22 (Continued)

SECONDARY LEAD WASTEWATER SAMPLING DATA
TREATED WASTEWATER SAMPLES - PLANT H

Pollutants(a)	Stream Code	Sample Type	Concentrations (mg/l, Except as Noted) Source	Day 1	Day 2	Day 3	Average
Nonconventional Pollutants							
Aluminum	418	2	<0.1	4	4	8	5.3
	419	3	<0.1	0.2	<1	<1	0.06
	420	3	<0.1	<0.1	<1	<1	<0.7
Barium	418	2	0.05	<0.5	<0.5	<0.5	<0.5
	419	3	0.05	0.05	<0.5	<0.5	0.02
	420	3	0.05	0.05	<0.5	<0.5	0.02
Boron	418	2	<0.1	<1	<1	1	0.3
	419	3	<0.1	0.1	<1	<1	0.03
	420	3	<0.1	0.1	<1	<1	0.03
Calcium	418	2	51.5	256	117	206	196
	419	3	51.5	644	735	862	747
	420	3	51.5	725	799	981	835
Cobalt	418	2	<0.05	<0.5	<0.5	<0.5	<0.5
	419	3	<0.05	<0.05	<0.5	<0.5	<0.4
	420	3	<0.05	<0.05	<0.5	<0.5	<0.4
Iron	418	2	<0.05	21	30.5	54.5	35
	419	3	<0.05	0.1	<0.5	<0.5	0.03
	420	3	<0.05	0.1	<0.5	<0.5	0.03
Magnesium	418	2	22.3	1,290	984	797	1,023
	419	3	22.3	849	1,050	1,070	990
	420	3	22.3	867	1,230	887	995
Manganese	418	2	<0.05	1	1	2	1.3
	419	3	<0.05	0.150	<0.5	<0.5	0.05
	420	3	<0.05	0.15	<0.5	<0.5	0.05
Molybdenum	418	2	<0.05	<0.5	<0.5	<0.5	<0.5
	419	3	<0.05	<0.05	<0.5	<0.5	<0.4
	420	3	<0.05	<0.05	<0.5	<0.5	<0.4

Table V-22 (Continued)

SECONDARY LEAD WASTEWATER SAMPLING DATA
TREATED WASTEWATER SAMPLES - PLANT H

Pollutants(a)	Stream Code	Sample Type	Concentrations (mg/l, Except as Noted) Source	Day 1	Day 2	Day 3	Average
Nonconventional Pollutants (Continued)							
Sodium	418	2	7.1	192	124	171	162
	419	3	7.1	142	132	150	141
	420	3	7.1	140	123	150	137
Tin	418	2	<0.05	<0.5	<0.5	<0.5	<0.5
	419	3	<0.05	<0.5	<0.5	<0.5	<0.5
	420	3	<0.05	<0.05	<0.5	<0.5	<0.4
Titanium	418	2	<0.05	<0.5	<0.5	<0.5	<0.5
	419	3	<0.05	<0.05	<0.5	<0.5	<0.4
	420	3	<0.05	<0.05	<0.5	<0.5	<0.4
Vanadium	418	2	<0.05	<0.5	<0.5	<0.5	<0.5
	419	3	<0.05	<0.05	<0.5	<0.5	<0.4
	420	3	<0.05	<0.05	<0.5	<0.5	<0.4
Yttrium	418	2	<0.05	<0.5	<0.5	<0.5	<0.5
	419	3	<0.05	<0.05	<0.5	<0.5	<0.4
	420	3	<0.05	<0.05	<0.5	<0.5	<0.4
Conventional Pollutants							
Oil and Grease	418	1	5.4	2	9.4	12	8
	419	1	5.4	9	<1	2	4
	420	1	5.4	<1	<1	<1	<1
Total Suspended Solids (TSS)	418	2	<1	22	95	200	100
	419	3	<1	140	46	25	70
	420	3	<1	37	56	22	38
pH (standard units)	418	2	7.0	3.4	1	1	
	419	3	7.0	9.0	9.0	9.0	
	420	3	7.0	9.5	9.5	9.5	

(a) These streams were not analyzed for toxic organic pollutants.

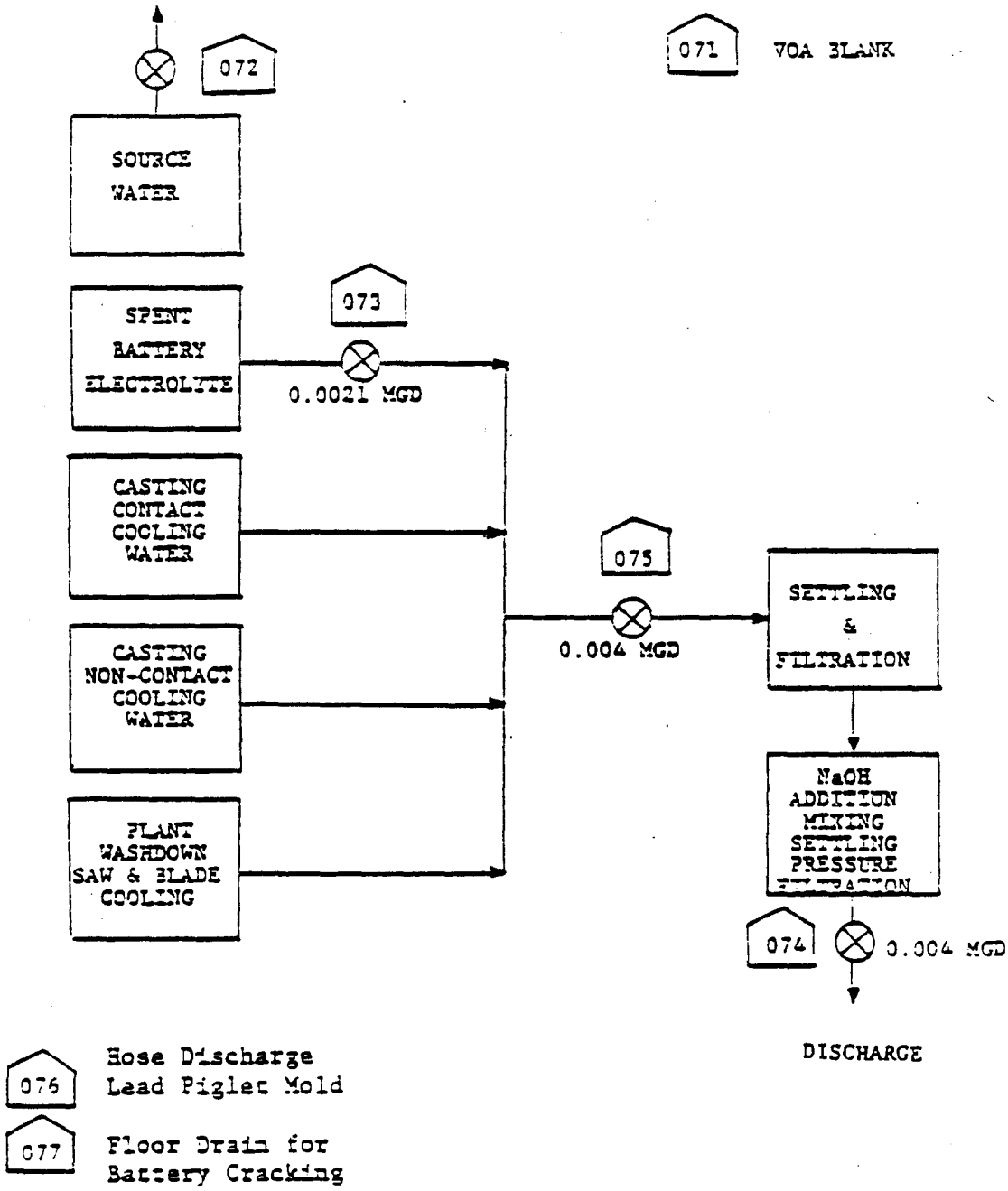

Figure V-1

SAMPLING SITES AT SECONDARY LEAD PLANT A

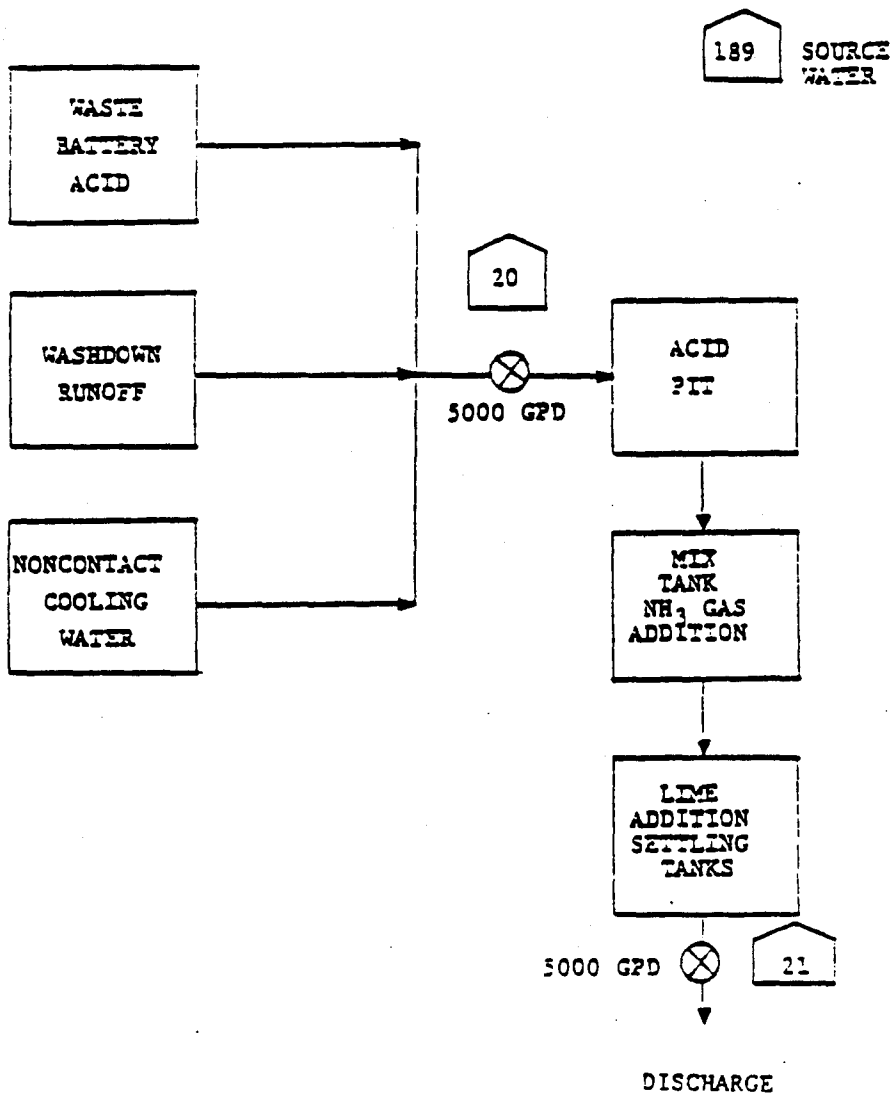

Figure V-4

SAMPLING SITES AT SECONDARY LEAD PLANT D

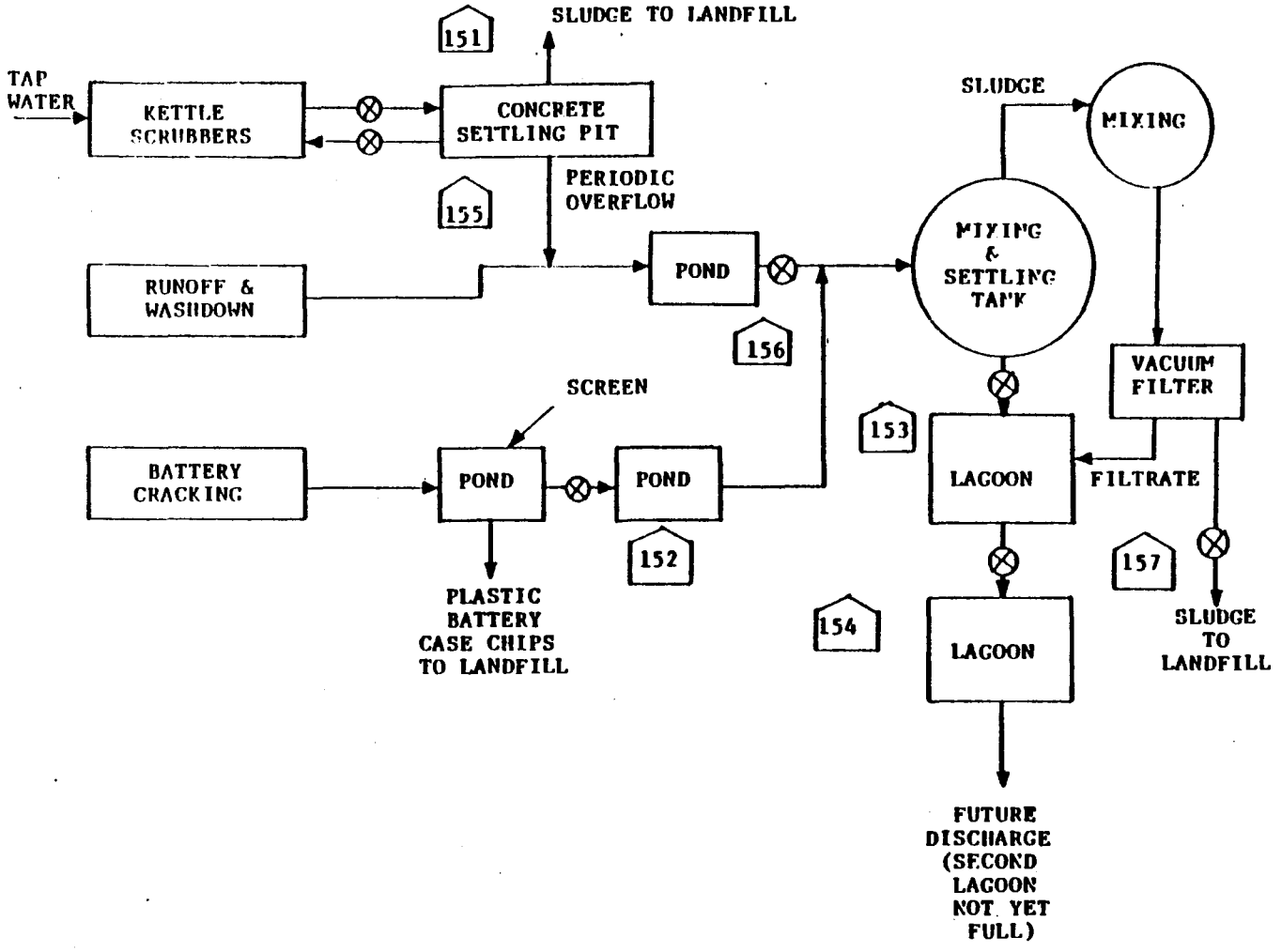

Figure V-5

SAMPLING SITES AT SECONDARY LEAD PLANT E

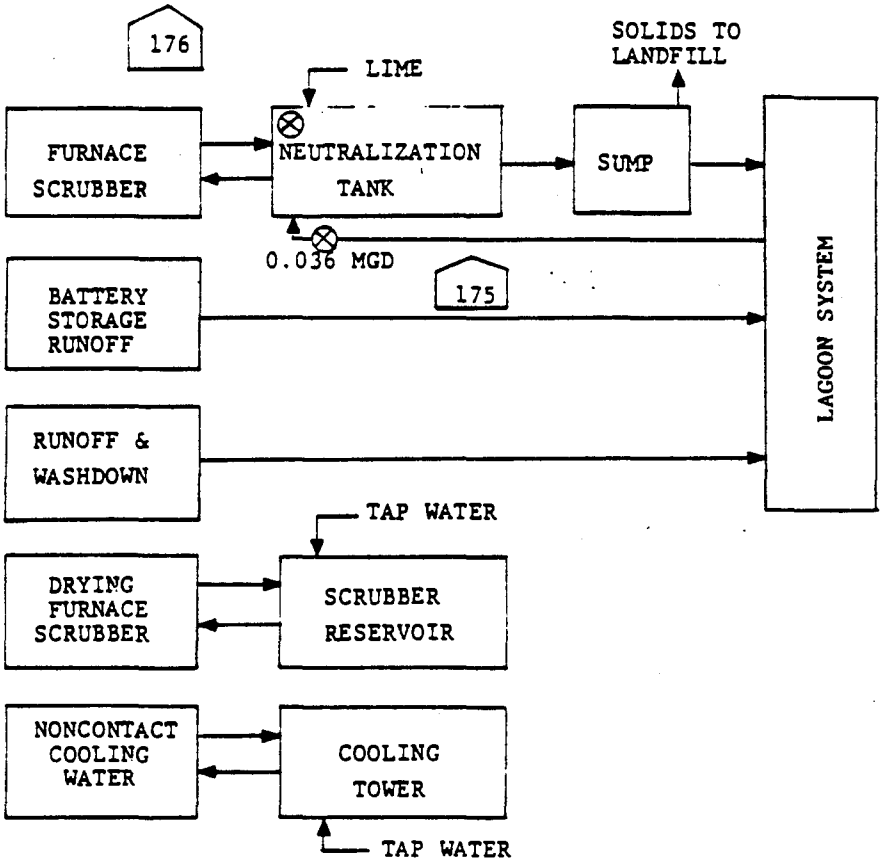

Figure V-6

SAMPLING SITES AT SECONDARY LEAD PLANT F

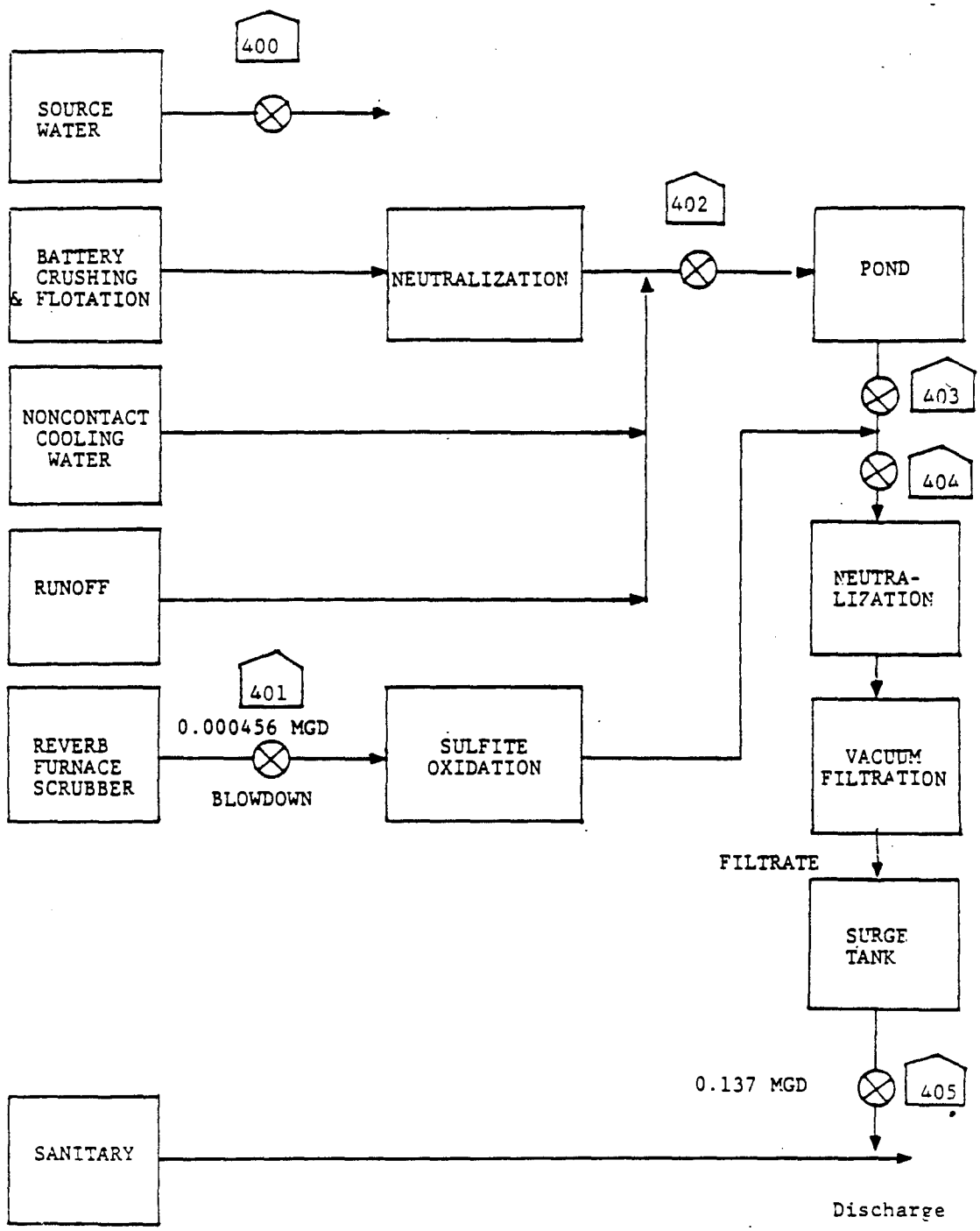

Figure V-7

SAMPLING SITES AT SECONDARY LEAD PLANT G

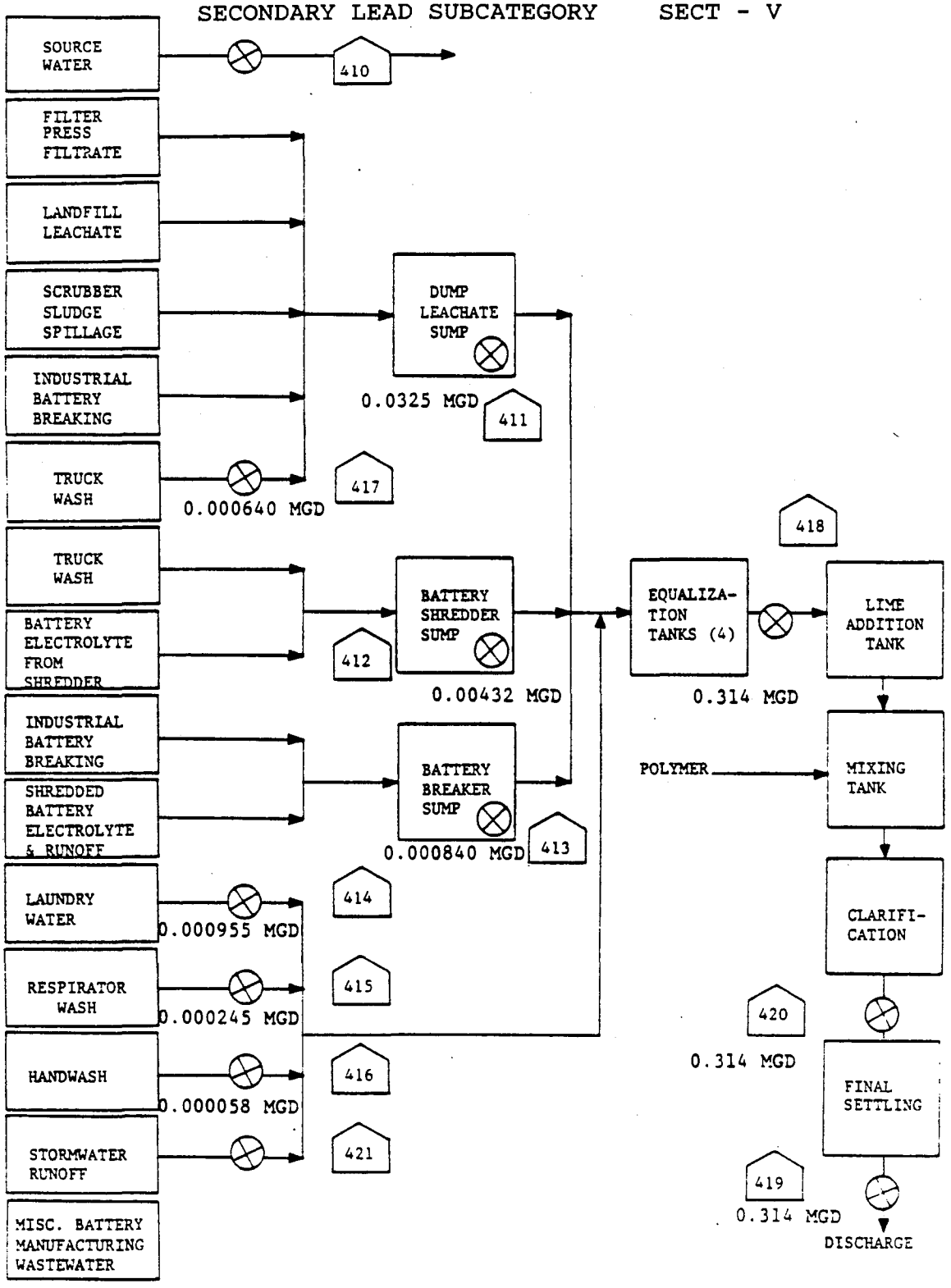

Figure V-8

SAMPLING SITES AT SECONDARY LEAD PLANT H

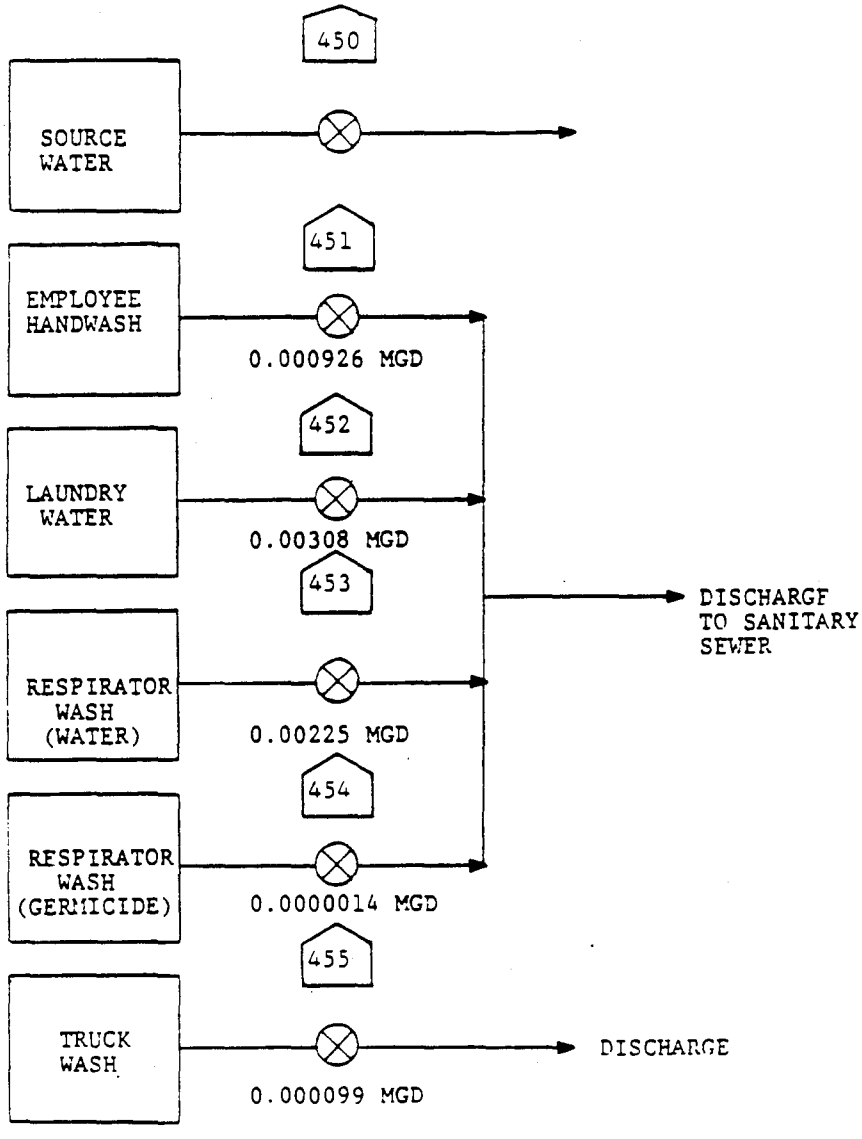

Figure V-9

SAMPLING SITES AT SECONDARY LEAD PLANT I

Page Intentionally Blank

SECTION VI

SELECTION OF POLLUTANTS

This section examines chemical analysis data presented in Section V from secondary lead plants, and discusses the selection or exclusion of pollutants for potential limitation. Each pollutant selected for potential limitation is discussed in of Vol. I. That discussion provides information about where the pollutant originates (i.e., whether it is a naturally occurring substance, process metal, or a manufactured compound); general physical properties and the form of the pollutant; toxic effects of the pollutant in humans and other animals; and behavior of the pollutant in POTW at the concentrations expected in industrial discharges.

The discussion that follows describes the analysis that was performed to select or exclude pollutants for further consideration for limitations and standards. Pollutants are further considered for limitation if they are present in concentrations treatable by the technologies considered in this analysis. The concentrations used for the toxic metals were the long-term performance values achievable by lime precipitation, sedimentation, and filtration. The concentrations used for the toxic organics were the long-term performance values achievable by carbon adsorption.

As discussed in Section V, EPA collected additional wastewater sampling data after the February 1983 proposal in an attempt to further characterize wastewater in the secondary lead subcategory. As a result of the new data, the Agency revised its pollutant frequency of occurrence analysis was revised.

After proposal, the Agency re-evaluated the treatment performance of activated carbon adsorption to control toxic organic pollutants. The treatment performance for the acid extractable, base-neutral extractable, and volatile organic pollutants has been set equal to the analytical quantification limit of 0.010 mg/l. The analytical quantification limit for pesticides and total phenols (by 4-AAP method) is 0.005 mg/l, which is below the 0.010 mg/l accepted for the other toxic organics. However, to be consistent, the treatment performance of 0.010 mg/l is used for pesticides and total phenols. The 0.010 mg/l concentration is achievable, assuming enough carbon is used in the column and a suitable contact time is allowed. The frequency of occurrence for 36 of the toxic pollutants has been redetermined based on the revised treatment performance value. However, no toxic organic pollutants have been selected for further consideration for limitation in this subcategory.

CONVENTIONAL AND NONCONVENTIONAL POLLUTANTS

This study examined samples from the secondary lead subcategory for three conventional pollutant parameters (oil and grease, total suspended solids, and pH) and four nonconventional pollutant parameters (ammonia, chemical oxygen demand, total organic carbon, and total phenols).

CONVENTIONAL AND NONCONVENTIONAL POLLUTANT PARAMETERS SELECTED

The following conventional and nonconventional pollutant parameters were selected for limitation in this subcategory:

ammonia
total suspended solids (TSS)
pH

Ammonia was detected in all 11 samples analyzed. Quantifiable concentrations ranged from 0.2 to 29 mg/l. Although none of these concentrations are above the 32 mg/l considered achievable with ammonia steam stripping, ammonia is selected for limitation. Only one kettle scrubber waste stream was sampled, and ammonia is known to be present in this stream with concentrations of 22, 25, and 29 mg/l. Ammonia is used in many wastewater treatment plants in the subcategory as a neutralizing agent. EPA believes that use of ammonia for wastewater treatment causes ammonia carried in recycled sludges to volatilize in the kettle. For this reason, ammonia is selected for limitation.

Total suspended solids ranged from 7 to 28,000 mg/l in 36 samples. All but three of the observed concentrations are above that considered achievable by treatment. Further, most of the methods used to remove toxic metals do so by converting these metals to precipitates. Meeting a limitation on total suspended solids also helps ensure that removal of these precipitated toxic metals has been effective. For these reasons, total suspended solids is considered for limitation in this subcategory.

The pH of a wastewater measures its relative acidity or alkalinity. In this study, the pH values observed ranged from 0.6 to 8.1. Many harmful effects may be caused by extreme pH values or by rapid changes in pH. Therefore, pH is considered for limitation in this subcategory.

TOXIC POLLUTANTS

The frequency of occurrence of the toxic pollutants in the waste water samples taken is presented in Table VI-1 (page 1951). These data provide the basis for the selection or exclusion of specific pollutants, as discussed below. Table VI-1 is based on the raw wastewater data from streams 73, 75, 208, 106, 108, 151, 152, 176, 401, 411, 412, 413, 414, 415, 416, 417, 451, 452, 453, 454, and 455 (see Section V). Treatment plant sampling data were not used in the frequency count.

TOXIC POLLUTANTS NEVER DETECTED

The toxic pollutants listed in Table VI-2 (page 1955) were not detected in any wastewater samples from this subcategory. They are not selected for consideration in establishing limitations.

TOXIC POLLUTANTS NEVER FOUND ABOVE THEIR ANALYTICAL QUANTIFICATION LIMIT

Toxic pollutants which are not detectable include those pollutants whose concentrations fall below EPA's nominal detection limit. The toxic pollutants listed in Table VI-3 (page 1957) were never found above their analytical quantification concentration in any wastewater samples from this subcategory; therefore, they are not selected for consideration in establishing limitations.

TOXIC POLLUTANTS PRESENT BELOW CONCENTRATIONS ACHIEVABLE BY TREATMENT

The pollutants listed below are not selected for consideration in establishing limitations because they were not found in any wastewater samples from this subcategory above concentrations considered achievable by existing or identified treatment technologies. These pollutants are discussed individually following the list.

47. bromoform
65. phenol
117. beryllium

Bromoform was detected in only one of 13 samples, and that one was below the concentration to which identified treatment can reduce its concentration (0.010 mg/l). Bromoform is thus not selected for consideration for limitation.

Phenol was found above its analytical quantification limit in three of four samples analyzed, but the highest concentration reported was 0.006 mg/l, and identified treatment can reduce its concentration only to 0.010 mg/l. Phenol is thus not selected for further consideration in establishing limitations.

Beryllium exceeded its analytical quantification limit in only two of 34 samples, with concentrations of 0.03 and 0.012 mg/l. These are below the concentration to which available treatment can reduce beryllium concentrations (0.20 mg/l), so beryllium is not selected for consideration for limitation.

TOXIC POLLUTANTS DETECTED IN A SMALL NUMBER OF SOURCES

Toxic pollutants detectable in the effluent from only a small number of sources within the subcategory and uniquely related to only those sources are not appropriate for limitation in a

national regulation. The following pollutants were not selected for limitation on this basis.

23. chloroform
39. fluoranthene
56. nitrobenzene
66. bis(2-ethylhexyl) phthalate
67. butyl benzyl phthalate
68. di-n-butyl phthalate
69. di-n-octyl phthalate
71. dimethyl phthalate
76. chrysene
77. acenaphthylene
84. pyrene
121. cyanide
123. mercury
125. selenium

Although these pollutants were not selected for consideration in establishing nationwide limitations, it may be appropriate, on a case-by-case basis, for the local permit writer to specify effluent limitations.

Chloroform, a common laboratory solvent, was detected in 10 of 13 samples, ranging from below the analytical quantification limit to 0.079 mg/l. Five of the 10 sample concentrations of chloroform detected were above the treatable concentration (0.010 mg/l). All five treatable samples were taken from the same plant. The presence of this pollutant is not attributable to materials or processes associated with the secondary lead subcategory. EPA suspects sample contamination as the source of this pollutant. In the dcp, all responding plants indicated that this pollutant was known to be absent or believed to be absent. For these reasons, chloroform is not selected for consideration for limitation.

Fluoranthene was detected above its treatable concentration in one of 11 samples analyzed, with a concentration of 0.027 mg/l. The concentration to which treatment is effective is 0.01 mg/l. Since fluoranthene was found in only one waste stream, and since all responding plants indicated in their dcp that this pollutant was known to be absent or believed to be absent, it is not selected for further consideration for limitation.

Nitrobenzene occurred above its treatable concentration (0.010 mg/l) in only one of the 11 samples, where it measured 0.016 mg/l. Two other samples of this waste stream at two different plants were reported as not detected. This site-specific result is not sufficient to characterize the whole subcategory, therefore, nitrobenzene is not selected for further consideration for limitation.

Bis(2-ethylhexyl) phthalate was found above both its analytical quantification limit and its treatable concentration (0.01 mg/l) in five of 11 samples, with a maximum concentration of 0.585

mg/l. The presence of this pollutant is not attributable to materials or processes associated with the secondary lead subcategory. It is commonly used as a plasticizer in laboratory and field sampling equipment. EPA suspects sample contamination as the source of this pollutant. Also, in the dcp all responding plants indicated that this pollutant was known to be absent or believed to be absent. Therefore, bis(2-ethylhexyl) phthalate is not selected for further consideration for limitation.

One of 11 samples analyzed for butyl benzyl phthalate was found to contain a concentration above its analytical quantification limit. This value was above the 0.010 mg/l concentration considered achievable with treatment. The presence of this pollutant is not attributable to materials or processes associated with the secondary lead subcategory. It is commonly used as a plasticizer in laboratory and field sampling equipment. EPA suspects sample contamination as the source of this pollutant. Also, in the dcp all responding plants indicated that this pollutant was known to be absent or believed to be absent. It is thus not selected for further consideration for limitation.

Two of 11 samples analyzed for di-n-butyl phthalate were found to contain concentrations above its analytical quantification limit, one of these above the 0.010 mg/l concentration considered achievable with treatment. The presence of this pollutant is not attributable to materials or processes associated with the secondary lead subcategory. It is commonly used as a plasticizer in laboratory and field sampling equipment. EPA suspects sample contamination as the source of this pollutant. Also, in the dcp all responding plants indicated that this pollutant was known to be absent or believed to be absent. It is thus not selected for further consideration for limitation.

Di-n-octyl phthalate was found above its analytical quantification limit (0.01 mg/l) in two of 11 samples. The presence of this pollutant is not attributable to materials or processes associated with the secondary lead subcategory. It is commonly used as a plasticizer in laboratory and field sampling equipment. EPA suspects sample contamination as the source of this pollutant. Also, in the dcp all responding plants indicated that this pollutant was known to be absent or believed to be absent. Therefore, di-n-octyl phthalate is not selected for further consideration for limitation.

Dimethyl phthalate was found in only one of 11 samples analyzed. The concentration detected was above the concentration considered achievable with treatment (0.010 mg/l). The presence of this pollutant is not attributable to materials or processes associated with the secondary lead subcategory. It is commonly used as a plasticizer in laboratory and field sampling equipment. EPA suspects sample contamination as the source of this pollutant. Also, in the dcp all responding plants indicated that this pollutant was known to be absent or believed to be absent. For these reasons, dimethyl phthalate is not selected for further consideration for limitation.

Chrysene was reported present above its analytical quantification limit in two of 11 samples. The two reported concentrations of chrysene were 0.139 and 0.545 mg/l, which are above the 0.010 mg/l concentration considered attainable with treatment. The process waste stream that produced the 0.545 mg/l value, also produced five not detected values at two other facilities. Chrysene is not considered characteristic of the subcategory because it was found in only two samples from two different process waste streams. Therefore, chrysene is not selected for further consideration for limitation.

Acenaphthylene occurred above its treatable concentration (0.010 mg/l) in only one of 11 samples, where it measured 0.035 mg/l. Two other samples of this waste stream at two different plants were reported as not detected. This site-specific result is not sufficient to characterize the whole subcategory, so acenaphthylene is not selected for further consideration for limitation.

Pyrene exceeded its analytical quantification limit (0.010 mg/l) in only two of 11 samples. The two reported concentrations of pyrene were 0.013 mg/l and 0.038 mg/l. These two values are from two different process waste streams. This site-specific result is not sufficient to characterize the whole subcategory. Also, in the dcp all responding plants indicated that this pollutant was known to be absent or believed to be absent. Therefore, pyrene is not selected for further consideration for limitation.

Cyanide was found at a treatable concentration in three of 14 samples, all at the same plant. All three concentrations (3.0, 4.0, and 6.0 mg/l) that were reported above the 0.047 mg/l concentration considered attainable are from the same plant. Because of the site-specificity of this result, cyanide not selected for consideration for limitation.

Mercury was found at treatable concentrations in two of 16 samples. Both treatable samples, with concentrations of 0.097 and 0.096 mg/l, were taken at the same plant. Because of the site-specificity of this result, mercury is not selected for further consideration for limitation.

Selenium was detected in three of 14 samples, with three detections occurring at the same plant. All three samples exceeded the 0.2 mg/l treatable concentration, with concentrations of 7.9, 10, and 15 mg/l. Because of the site-specificity of this result, selenium is not selected for further consideration for limitation.

TOXIC POLLUTANTS SELECTED FOR FURTHER CONSIDERATION FOR LIMITATIONS

The toxic pollutants listed below were selected for establishing limitations and standards for this subcategory. The toxic pollutants selected are each discussed following the list.

114. antimony
115. arsenic
118. cadmium
119. chromium
120. copper
122. lead
124. nickel
126. silver
127. thallium
128. zinc

Twenty of 34 samples analyzed for antimony exhibited concentrations over the treatable concentration (0.47 mg/l). Most of these were above 10 mg/l, with a maximum of 120 mg/l. Antimony is thus selected for further consideration for limitation.

Arsenic was found above its treatable concentration (0.34 mg/l) in 22 of 33 samples analyzed. Treatable concentrations ranged from 0.43 to 34 mg/l. Arsenic is thus selected for further consideration for limitation.

Twenty-four of 36 samples analyzed for cadmium were found to have concentrations in excess of the treatable concentration (0.049 mg/l). Treatable concentrations ranged from 0.24 to 103 mg/l. Therefore, cadmium is selected for further consideration for limitation.

Chromium was found to exceed its treatable concentration (0.07 mg/l) in 21 of 36 samples, with a maximum of 1.6 mg/l. Therefore, chromium is selected for further consideration for limitation.

Copper was found above its treatable concentration (0.39 mg/l) in 29 of 36 samples analyzed, with a maximum of 41.6 mg/l. Therefore, copper is selected for further consideration for limitation.

Lead was detected above its treatable concentration (0.08 mg/l) in 34 of 37 samples analyzed. Treatable concentrations ranged from 0.3 to 1,300 mg/l, with the majority above 10 mg/l. Lead is thus selected for further consideration for limitation.

Twenty-two of 37 samples analyzed for nickel exhibited concentrations exceeding its treatable concentration (0.22 mg/l). Treatable concentrations ranged from 0.25 to 48 mg/l. Therefore, nickel is selected for further consideration for limitation.

Silver was found above its treatable concentration (0.07 mg/l) in five of 14 samples, ranging from 0.16 to 0.34 mg/l. The treatable concentrations were found in four different waste streams.

Therefore, silver is selected for further consideration for limitation.

Thallium was detected above its treatable concentration (0.34 mg/l) in five of 14 samples, ranging from 0.5 to 3.2 mg/l. The treatable concentrations were found in four different waste streams. Therefore, thallium is selected for further consideration for limitation.

Zinc was found above its treatable concentration (0.23 mg/l) in 30 of 36 samples analyzed. Most of these were above 1.0 mg/l, with a high of 48 mg/l. Zinc is thus selected for further consideration for limitation.

Table VI-1

FREQUENCY OF OCCURRENCE OF TOXIC POLLUTANTS
SECONDARY LEAD
RAW WASTEWATER

Pollutant	Analytical Quantification Concentration (mg/l) (a)	Treatable Concentration (mg/l) (b)	Number of Streams Analyzed	Number of Samples Analyzed	ND	Detected Below Quantification Concentration	Detected Below Treatable Concentration	Detected Above Treatable Concentration
1 acenaphthene	0.010	0.010	7	11	11			
2. acrolein	0.010	0.010	5	13	13			
3. acrylonitrile	0.010	0.010	5	13	13			
4. benzene	0.010	0.010	5	13	10	3		
5. benzidine	0.010	0.010	7	11	11			
6. carbon tetrachloride	0.010	0.010	5	13	13			
7. chlorobenzene	0.010	0.010	5	13	13			
8. 1,2,4-trichlorobenzene	0.010	0.010	7	11	11			
9. hexachlorobenzene	0.010	0.010	7	11	11			
10. 1,2-dichloroethane	0.010	0.010	5	13	13			
11. 1,1,1-trichloroethane	0.010	0.010	5	13	12	1		
12. hexachloroethane	0.010	0.010	7	11	11			
13. 1,1-dichloroethane	0.010	0.010	5	13	13			
14. 1,1,2-trichloroethane	0.010	0.010	5	13	13			
15. 1,1,2,2-tetrachloroethane	0.010	0.010	5	13	13			
16. chloroethane	0.010	0.010	5	13	13			
17. bis(chloromethyl) ether	0.010	0.010	5	13	13			
18. bis(2-chloroethyl) ether	0.010	0.010	7	11	11			
19. 2-chloroethyl vinyl ether	0.010	0.010	5	13	13			
20. 2-chloronaphthalene	0.010	0.010	7	11	11			
21. 2,4,6-trichlorophenol	0.010	0.010	2	4	1	3		
22. parachlorometa cresol	0.010	0.010	2	4	4			
23. chloroform	0.010	0.010	5	13	3	5		5
24. 2-chlorophenol	0.010	0.010	2	4	4			
25. 1,2-dichlorobenzene	0.010	0.010	7	11	11			
26. 1,3-dichlorobenzene	0.010	0.010	7	11	11			
27. 1,4-dichlorobenzene	0.010	0.010	7	11	11			
28. 3,3'-dichlorobenzidine	0.010	0.010	7	11	11			
29. 1,1-dichloroethylene	0.010	0.010	5	13	13			
30. 1,2-trans-dichloroethylene	0.010	0.010	5	13	13			
31. 2,4-dichlorophenol	0.010	0.010	2	4	1	3		
32. 1,2-dichloropropane	0.010	0.010	5	13	13			
33. 1,3-dichloropropylene	0.010	0.010	5	13	13			
34. 2,4-dimethylphenol	0.010	0.010	2	4	4			
35. 2,4-dinitrotoluene	0.010	0.010	7	11	11			
36. 2,6-dinitrotoluene	0.010	0.010	7	11	11			
37. 1,2-diphenylhydrazine	0.010	0.010	7	11	11			

Table VI-1 (Continued)

FREQUENCY OF OCCURRENCE OF TOXIC POLLUTANTS
SECONDARY LEAD
RAW WASTEWATER

Pollutant	Analytical Quantification Concentration (mg/l) (a)	Treatable Concentration (mg/l) (b)	Number of Streams Analyzed	Number of Samples Analyzed	ND	Detected Below Quantification Concentration	Detected Below Treatable Concentration	Detected Above Treatable Concentration
38. ethylbenzene	0.010	0.010	5	13	13			
39. fluoranthene	0.010	0.010	7	11	9	1		1
40. 4-chlorophenyl phenyl ether	0.010	0.010	7	11	10	1		
41. 4-bromophenyl phenyl ether	0.010	0.010	7	11	11			
42. bis(2-chloroisopropyl) ether	0.010	0.010	7	11	11			
43. bis(2-chloroethoxy) methane	0.010	0.010	5	13	13			
44. methylene chloride	0.010	0.010	5	13	10	3		
45. methyl chloride	0.010	0.010	5	13	13			
46. methyl bromide	0.010	0.010	5	13	13			
47. bromoform	0.010	0.010	5	13	12		1	
48. dichlorobromomethane	0.010	0.010	5	13	13			
49. trichlorofluoromethane	0.010	0.010	5	13	13			
50. dichlorodifluoromethane	0.010	0.010	5	13	13			
51. chlorodibromomethane	0.010	0.010	5	13	13			
52. hexachlorobutadiene	0.010	0.010	7	11	11			
53. hexachlorocyclopentadiene	0.010	0.010	7	11	11			
54. isophorone	0.010	0.010	7	11	11			
55. naphthalene	0.010	0.010	7	11	11			
56 nitrobenzene	0.010	0.010	7	11	10			1
57. 2-nitrophenol	0.010	0.010	2	4	3	1		
58. 4-nitrophenol	0.010	0.010	2	4	4			
59. 2,4-dinitrophenol	0.010	0.010	2	4	4			
60. 4,6-dinitro-o-cresol	0.010	0.010	2	4	4			
61. N-nitrosodimethylamine	0.010	0.010	7	11	11			
62. N-nitrosodiphenylamine	0.010	0.010	7	11	11			
63. N-nitrosodi-n-propylamine	0.010	0.010	7	11	11			
64. pentachlorophenol	0.010	0.010	2	4	4			
65. phenol	0.010	0.010	2	4	1		3	
66. bis(2-ethylhexyl) phthalate	0.010	0.010	7	11	1	5		5
67. butyl benzyl phthalate	0.010	0.010	7	11	8	2		1
68. di-n-butyl phthalate	0.010	0.010	7	11	4	5	1	1
69. di-n-octyl phthalate	0.010	0.010	7	11	8	1		2
70. diethyl phthalate	0.010	0.010	7	11	11			
71. dimethyl phthalate	0.010	0.010	7	11	10			1
72. benzo(a)anthracene	0.010	0.010	7	11	9	2		
73. benzo(a)pyrene	0.010	0.010	7	11	11			
74. 3,4-benzofluoranthene	0.010	0.010	7	11	11			
75. benzo(k)fluoranthene	0.010	0.010	7	11	11			
76. chrysene	0.010	0.010	7	11	6	3		2

Table VI-1 (Continued)

FREQUENCY OF OCCURRENCE OF TOXIC POLLUTANTS
SECONDARY LEAD
RAW WASTEWATER

Pollutant	Analytical Quantification Concentration (mg/l) (a)	Treatable Concentration (mg/l) (b)	Number of Streams Analyzed	Number of Samples Analyzed	ND	Detected Below Quantification Concentration	Detected Below Treatable Concentration	Detected Above Treatable Concentration
77. acenaphthylene	0.010	0.010	7	11	10			1
78. anthracene (c)	0.010	0.010	7	11	8	3		
79. benzo(ghi)perylene	0.010	0.010	7	11	11			
80. fluorene	0.010	0.010	7	11	8	3		
81. phenanthrene (c)	0.010	0.010	7	11	8	3		
82. dibenzo(a,h)anthracene	0.010	0.010	7	11	11			
83. indeno(1,2,3-cd)pyrene	0.010	0.010	7	11	11			
84. pyrene	0.010	0.010	7	11	8	1		2
85. tetrachloroethylene	0.010	0.010	5	13	13			
86. toluene	0.010	0.010	5	13	11	2		
87. trichloroethylene	0.010	0.010	5	13	13			
88. vinyl chloride	0.010	0.010	5	13	13			
89. aldrin	0.005	0.010	6	11	10	1		
90. dieldrin	0.005	0.010	6	11	9	2		
91. chlordane	0.005	0.010	6	11	8	3		
92. 4,4'-DDT	0.005	0.010	6	11	9	2		
93. 4,4'-DDE	0.005	0.010	6	11	9	2		
94. 4,4'-DDD	0.005	0.010	6	11	10	1		
95. alpha-endosulfan	0.005	0.010	6	11	11			
96. beta-endosulfan	0.005	0.010	6	11	9	2		
97. endosulfan sulfate	0.005	0.010	6	11	9	2		
98. endrin	0.005	0.010	6	11	10	1		
99. endrin aldehyde	0.005	0.010	6	11	10	1		
100. heptachlor	0.005	0.010	6	11	8	3		
101. heptachlor epoxide	0.005	0.010	6	11	9	2		
102. alpha-BHC	0.005	0.010	6	11	9	2		
103. beta-BHC	0.005	0.010	6	11	8	3		
104. gamma-BHC	0.005	0.010	6	11	8	3		
105. delta-BHC	0.005	0.010	6	11	11			
106. PCB-1242 (d)	0.005	0.010	6	11	8	3		
107. PCB-1254 (d)	0.005	0.010	6	11	8	3		
108. PCB-1221 (d)	0.005	0.010	6	11	8	3		
109. PCB-1232 (e)	0.005	0.001	6	11	8	3		
110. PCB-1248 (e)	0.005	0.010	6	11	8	3		
111. PCB-1260 (e)	0.005	0.010	6	11	8	3		
112. PCB-1016 (e)	0.005	0.010	6	11	8	3		
113. toxaphene	0.005	0.010	6	11	11			
114. antimony	0.100	0.470	20	34	6	3	5	20
115. arsenic	0.10	0.340	19	33	4		7	22

Table VI-1 (Continued)

FREQUENCY OF OCCURRENCE OF TOXIC POLLUTANTS
SECONDARY LEAD
RAW WASTEWATER

Pollutant	Analytical Quantification Concentration (mg/l) (a)	Treatable Concentration (mg/l) (b)	Number of Streams Analyzed	Number of Samples Analyzed	ND	Detected Below Quantification Concentration	Detected Below Treatable Concentration	Detected Above Treatable Concentration
116. asbestos	10 MFL	10 MFL	2	3	3			
117. beryllium	0.010	0.200	20	34	20	12	2	
118. cadmium	0.002	0.049	20	36	8		4	24
119. chromium	0.005	0.070	20	36	8	3	4	21
120. copper	0.009	0.390	20	36	1		6	29
121. cyanide (f)	.02	0.047	6	14	1	7	3	3
122. lead	0.020	0.080	21	37	2	1		34
123. mercury	0.0001	0.036	8	16	2	1	11	2
124. nickel	0.005	0.220	20	36	11		3	22
125. selenium	0.01	0.200	8	14	11			3
126. silver	0.02	0.070	8	14	1	4	4	5
127. thallium	0.100	0.340	8	14	7	1	1	5
128. zinc	0.050	0.230	20	36	1	1	4	30
129. 2,3,7,8-tetrachlorodibenzo-p-dioxin (TCDD)	Not Analyzed							

(a) Analytical quantification concentration was reported with the data (see Section V).

(b) Treatable concentrations are based on performance of lime precipitation, sedimentation, and filtration for toxic metal pollutants and activated carbon adsorption for toxic organic pollutants.

(c), (d), (e) Reported together.

(f) Analytical quantification concentration for EPA Method 335.2, Total Cyanide Methods for Chemical Analysis of Water and Wastes, EPA-600/4-79-020, March 1979.

TABLE VI-2

TOXIC POLLUTANTS NEVER DETECTED

1. acenaphthene
2. acrolein
3. acrylonitrile
5. benzidene
6. carbon tetrachloride (tetrachloromethane)
7. chlorobenzene
8. 1,2,4-trichlorobenzene
9. hexachlorobenzene
10. 1,2-dichloroethane
12. hexachlorethane
13. 1,1-dichloroethane
14. 1,1,2-trichloroethane
15. 1,1,2,2-tetrachloroethane
16. chloroethane
17. DELETED
18. bis(2-chloroethyl)ether
19. 2-chloroethyl vinyl ether (mixed)
20. 2-chloronaphthalene
22. parachlorometa cresol
24. 2-chlorophenol
25. 1,2-dichlorobenzene
26. 1,3-dichlorobenzene
27. 1,4-dichlorobenzene
28. 3,3'-dichlorobenzidine
29. 1,1-dichloroethylene
30. 1,2-trans-dichloroethylene
32. 1,2-dichloropropane
33. 1,2-dichloropropylene (1,3-dichloropropene)
34. 2,4-dimethylphenol
35. 2,4-dinitrotoluene
36. 2,6-dinitrotoluene
37. 1,2-diphenylhydrazine
38. ethylbenzene
41. 4-bromophenyl phenyl ether
42. bis(2-chloroisopropyl)ether
43. bis(2-chloroethoxy)methane
45. methyl chloride (chloromethane)
46. methyl bromide (bromomethane)
48. dichlorobromomethane
49. DELETED
50. DELETED
51. chlorodibromomethane
52. hexachlorobutadiene
53. hexachlorocyclopentadiene
54. isophorone
55. naphthalene

TABLE VI-2 (Continued)

TOXIC POLLUTANTS NEVER DETECTED

58. 4-nitrophenol
59. 2,4-dinitrophenol
60. 4,6-dinitro-o-cresol
61. N-nitrosodimethylamine
62. N-nitrosodiphenylamine
63. N-nitrosodi-n-propylamine
64. pentachlorophenol
70. diethyl phthalate
73. benzo(a)pyrene
74. 3,4-benzofluoranthene
75. benzo(k)fluoranthene
79. benzo(ghi)perylene
82. dibenzo(a,h)anthracene
83. indeno(1,2,3-cd)pyrene
85. tetrachloroethylene
87. trichloroethylene
88. vinyl chloride
95. alpha-endosulfan
105. delta-BHC
113. toxaphene
116. asbestos
129. 2,3,7,8-tetrachlorodibenzo-p-dioxin (TCDD)

TABLE VI-3

TOXIC POLLUTANTS NEVER FOUND ABOVE THEIR ANALYTICAL QUANTIFICATION LIMIT

4. benzene
11. 1,1,1-trichloroethane
21. 2,4,6-trichlorophenol
31. 2,4-dichlorophenol
40. 4-chlorophenyl phenyl ether
44. methylene chloride
57. 2-nitrophenol
72. benzo(a)anthracene (1,2-benzanthracene)
78. anthracene (a)
80. fluorene
81. phenanthrene (a)
86. toluene
89. aldrin
90. dieldrin
91. chlordane
92. 4,4'-DDT
93. 4,4'-DDE
94. 4,4'-DDD
96. beta-endosulfan
97. endosulfan sulfate
98. endrin
99. endrin aldehyde
100. heptachlor
101. heptachlor epoxide
102. a-BHC-Alpha
103. b-BHC-Beta
104. r-BHC (lindane)-Gamma
106. PCB-1242 (Arochlor 1242) (b)
107. PCB-1254 (Arochlor 1254) (b)
108. PCB-1221 (Arochlor 1221) (b)
109. PCB-1232 (Arochlor 1232) (c)
110. PCB-1248 (Arochlor 1248) (c)
111. PCB-1260 (Arochlor 1260) (c)
112. PCB-1016 (Arochlor 1016) (c)

(a), (b), (c) Reported together, as a combined value

Page Intentionally Blank

SECTION VII

CONTROL AND TREATMENT TECHNOLOGIES

The preceding sections of this supplement discussed the wastewater sources, flows, and characteristics of the wastewaters from secondary lead plants. This section summarizes the description of these wastewaters and indicates the level of treatment which is currently practiced by the secondary lead subcategory for each waste stream.

CURRENT CONTROL AND TREATMENT PRACTICES

This section presents a summary of the control and treatment technologies that are currently applied to each of the sources generating wastewater in this subcategory. As discussed in Section V, wastewater associated with the secondary lead subcategory is characterized by the presence of the toxic metal pollutants and suspended solids. This analysis is supported by the raw (untreated) wastewater data presented for specific sources as well as combined waste streams in Section V. Generally, these pollutants are present in each of the waste streams at concentrations above treatability, so these waste streams are commonly combined for treatment to reduce the concentrations of these pollutants. Construction of one wastewater treatment system for combined treatment allows plants to take advantage of economies of scale and, in some instances, to combine streams of differing alkalinity to reduce treatment chemical requirements. Twenty-four plants in this subcategory currently have lime precipitation and sedimentation or caustic precipitation and sedimentation treatment, and seven have lime precipitation, sedimentation and filtration. As such, three options have been selected for consideration for BPT, BAT, BDT, and pretreatment in this subcategory, based on combined treatment of these compatible waste streams.

BATTERY CRACKING

Wastewater from the battery cracking operation may result from the following sources:

1. Waste battery electrolyte,
2. Saw or breaker cooling water, and
3. Area washdown.

The combined wastewater from these sources has the characteristics of the battery electrolyte; pollutant concentrations are strongly dependent on the amount of dilution from the other water sources. In general, this wastewater is characterized by treatable concentrations of suspended and dissolved solids, toxic metals, and arsenic. Of the 35 plants with battery cracking surveyed, four do not currently have any

control on this wastewater stream; they either discharge it or use contract disposal. The majority neutralize the spent acid using various neutralizing agents. Ammonia, lime, and caustic are the most common chemicals used to raise the wastewater pH. Thirty-one plants provide for settling of solids after neutralization with sedimentation equipment (e.g., clarifiers). Seven plants filter the treated wastewater; in two of these plants the filtration step occurs after sedimentation, and in the others filtration is used alone to remove suspended solids. Several plants add polymer to enhance the settling of this wastewater. One plant combines battery cracking wastewater with stormwater runoff, noncontact cooling water, water softener backflush and sanitary wastes after preliminary treatment, consisting of neutralization with ammonia and sedimentation. Approximately 20 percent of the combined wastewater is evaporated in a cooling tower and recycled to the plant process. Cooling tower blowdown is treated by ion exchange and then discharged. This allows the plant to effectively recycle or evaporate 90 percent of its wastewater. Treated water is recycled in four of the plants; others send it to ponds, or discharge it either directly or to a POTW.

BLAST, REVERBERATORY, AND ROTARY FURNACE WET AIR POLLUTION CONTROL

Air emissions from the blast, rotary, and reverberatory furnaces contain particulate matter and sulfur oxides (SO_x) which must be removed to meet air emissions standards. Either dry or wet methods may be used for particulate control; of the 48 plants surveyed which have blast, rotary, or reverberatory furnaces, 41 utilize baghouses or dry scrubbers, while seven plants have wet lime or sodium scrubbers to control sulfur oxide emissions. One of the seven plants operates two scrubbers on two different smelting furnaces. Furnace scrubbing solution contains treatable concentrations of suspended solids and lead. All of the seven plants with wet scrubbers recycle a portion of the scrubber water; the average recycle ratio is 94 percent. Two plants indicate they recycle 100 percent of the scrubber water. All seven plants use an alkaline scrubbing solution to neutralize the sulfur oxide fumes. The neutralizing agents used are lime (two plants), ammonia (one plant), and soda ash (one plant). Three plants also settle or filter the scrubber liquor before recycle. Treated wastewater is discharged to a POTW in the plants not practicing total recycle.

KETTLE WET AIR POLLUTION CONTROL

Kettles used in the refining and alloying operation may produce a gaseous stream which may require control, primarily to reduce particulate emissions. Of the plants surveyed, 14 do not control kettle emissions, 18 use dry controls (baghouses), and the remaining 10 use wet scrubbers. Kettle scrubber effluent contains lead, arsenic, other alloying metals, and suspended solids at treatable concentrations. Nine of the 10 plants with wet scrubbers recycle the scrubber water; the average recycle

ratio is over 98 percent, with six plants reporting 100 percent recycle. However, in conversations with the Secondary Lead Smelters Association, the Agency has learned that these six 100 percent recycling plants discharge their scrubber liquor on a batch basis. Although these discharges were not quantified at five of the six plants, some are as infrequent as one time per month. These plants did not report the treatment practiced (if any) on the batch discharge. The remaining plant utilizes the scrubber wastewater in the battery cracking operation. Of the two plants not using 100 percent recycle, one treats the blowdown using sodium carbonate, sedimentation and filtration, while the other does not treat the blowdown. Both plants discharge the blowdown to a POTW.

LEAD PASTE DESULFURIZATION

As discussed in Section V, one plant operates a process to convert lead sulfate paste into lead oxide using ammonium carbonate. This process is designed for zero discharge of wastewater, with all product streams being recycled or recovered for sale. No wastewater treatment is needed.

CASTING CONTACT COOLING WATER

Water may be used in the casting operation to accelerate the cooling of the cast metal. Of the plants surveyed, only nine use direct contact cooling. One plant uses total recycle of the cooling water, two rely on total or partial evaporation to eliminate the wastewater, and one of these also practices recycle. The remaining plants discharge wastewater with no treatment.

TRUCK WASH

Most of the 35 plants which crack batteries wash the trucks used to haul the raw material. Only four plants report treating the waste wash water. One plant evaporates the wastewater completely. Another plant treats the wastewater in its central treatment system consisting of lime, polymer addition, and sedimentation. A third plant neutralizes the wastewater with soda ash and settles in a concrete pit; the pit effluent is reused for truck washing. Solids are recycled to the smelting furnace. The fourth plant neutralizes the wastewater with caustic and settles in a clarifier.

FACILITY WASHDOWN

Of the nine plants reporting the use of water for equipment and floor wash to control fugitive lead emissions, eight treat the water before reuse or discharge. The following treatment schemes are currently practiced:

1. Neutralization with ammonia, polyelectrolyte addition, sedimentation and reuse;

2. Wash water is mixed with treated sanitary waste and discharged to a septic lagoon;

3. Neutralization with soda ash, sedimentation, and reuse;

4. Neutralization with caustic, sedimentation with a clarifier and reuse;

5. Neutralization with caustic, sedimentation, followed by lime and settle treatment;

6. Sedimentation, pH adjustment (chemical not specified), sedimentation, filtration, and discharge to a percolation pond;

7. Cooling tower followed by ion-exchange before discharge; and

8. Sedimentation, pH adjustment (chemical not specified), and final sedimentation followed by reuse.

BATTERY CASE CLASSIFICATION

Eight plants use water for a flotation medium during classification of scrap battery materials. All eight plants treat this wastewater before recycle or discharge. The following treatment schemes are currently in place:

1. Neutralization with ammonia and sedimentation - one plant,

2. Lime neutralization and sedimentation - two plants,

3. Neutralization with soda ash and sedimentation followed by reuse - one plant,

4. Neutralization with caustic and sedimentation - one plant,

5. Sedimentation, pH adjustment (chemical unspecified), and final sedimentation followed by reuse - one plant;

6. Sedimentation, pH adjustment (chemical unspecified), sedimentation, filtration and discharge to a percolation pond. Reuse of water from pond - one plant; and

7. Neutralization with ammonia, polyelectrolyte addition, and clarification followed by reuse.

WASTEWATER FROM INDUSTRIAL HYGIENE COMPLIANCE

Most secondary lead smelters are required to reduce occupational lead exposures by laundering employee uniforms, washing employee respirators and ensuring that employees use hand wash facilities. Through wastewater sampling efforts after proposal, the Agency

determined that these wastewaters are contaminated and warrant treatment. All plants did not report these wastewater streams present. The Agency assumed that all plants operating smelting furnaces would be required to comply with applicable industrial hygiene regulations. Most plants reporting these wastewater streams do not treat the discharge, but segregate this wastewater from other process wastewater and discharge it to POTW. One plant reports settling laundry water before discharge to a POTW. Another plant neutralizes laundry water with ammonia, along with other process water. Neutralization is followed by sedimentation.

CONTROL AND TREATMENT OPTIONS CONSIDERED

As the sampling and analytical data in Section V indicate, the wastewaters from the secondary lead subcategory contain various types of contaminants. The primary constituents of concern are dissolved metals, suspended solids, dissolved solids, and pH extremes or fluctuations. The Agency examined three control and treatment technology options since proposal that are applicable to the wastewaters from the secondary lead subcategory.

OPTION A

Option A for the secondary lead subcategory requires treatment technologies to reduce pollutant mass. The Option A treatment scheme consists of lime and settle treatment (chemical precipitation and sedimentation) applied to the combined streams of battery cracking wastewater, furnace air pollution scrubbing wastewater, casting contact cooling water, kettle air pollution scrubbing wastewater, truck wash, facility washdown, battery case classification wastewater, and industrial hygiene wastewater. Treatment is followed by the complete recycle of facility washdown and battery case classification wastewater. Preliminary treatment with oil skimming is also required for waste streams containing treatable concentrations of oil and grease. Chemical precipitation is used to remove metals by the addition of lime, followed by gravity sedimentation. Suspended solids is also removed in the process. At proposal, this option also required dry control methods to control air emissions from kettle refining or alternately, 100 percent recycle of kettle scrubber liquor. However, data gathered through Section 308 requests indicate that a periodic blowdown is needed, and so a discharge allowance now is provided. Although a specific mass limitation is not provided for oil and grease, oil skimming is needed for battery cracking, furnace wet air pollution control, truck wash, laundry, handwash, and respirator wash wastewater to ensure proper metals removal. Oil and grease interferes with the chemical addition and mixing required for chemical precipitation treatment.

OPTION B

Option B for the secondary lead subcategory requires control and treatment to reduce the discharge of wastewater volume and pollutant mass. Option B includes preliminary treatment with oil skimming (where required), chemical precipitation and sedimentation, total recycle of treated facility washdown and battery case classification wastewater, plus wastewater flow reduction to reduce the volume of wastewater discharged. Water recycle and reuse are the principal control mechanisms for flow reduction.

OPTION C

Option C for the secondary lead subcategory consists of Option B, (in-process flow reduction, oil skimming (where required), lime precipitation, sedimentation, and total recycle of treated facility washdown and battery case classification wastewater) with the addition of multimedia filtration at the end of Option B treatment. Multimedia filtration is used to remove suspended solids, including precipitated metals, below the concentration attainable by gravity sedimentation. The filter suggested is of the gravity, mixed-media type, although other forms of filters such as rapid sand filters or pressure filters would perform satisfactorily. The addition of filters also provides for consistent removal during periods when there are rapid increases in flows or loadings of pollutants to the treatment system.

CONTROL AND TREATMENT OPTIONS REJECTED

Two additional treatment technologies were considered prior to proposing effluent limitations for this subcategory as discussed below. Activated alumina and reverse osmosis were rejected because they were not demonstrated in the nonferrous metals manufacturing category nor were they readily transferable from other categories.

None of the toxic organic pollutants were selected for further consideration in establishing limitations for the secondary lead subcategory. Therefore, Option E, which includes activated carbon adsorption for organic removal, was not applicable to this subcategory.

OPTION D

Option D for the secondary lead subcategory consists of Option C, (in-process flow reduction, lime precipitation, sedimentation, multimedia filtration) with the addition of activated alumina technology at the end of Option C treatment. The activated alumina process is used to remove dissolved arsenic which remains after lime precipitation.

OPTION F

Option F for the secondary lead subcategory consists of Option C, (in-process flow reduction, lime precipitation, sedimentation, multimedia filtration) with the addition of reverse osmosis and multiple-effect evaporation technology at the end of Option C treatment. Option F is used for complete recycle of the treated water by controlling the concentration of dissolved solids. Multiple-effect evaporation is used to dewater brines rejected from reverse osmosis.

SECTION VIII

COSTS, ENERGY, AND NONWATER QUALITY ASPECTS

This section describes the method used to develop the costs associated with the control and treatment technologies discussed in Section VII for wastewaters from secondary lead plants. The energy requirements of the considered options as well as solid waste and air pollution aspects are also discussed in this section.

TREATMENT OPTIONS COSTED FOR EXISTING SOURCES

As discussed in Section VII, three control and treatment options are considered for treating wastewater from the secondary lead subcategory. Cost estimates have been developed for each of these control and treatment options. The control and treatment options are presented schematically in Figures X-1 through X-3 (pages 2009 - 2011), and summarized below.

OPTION A

Option A for the secondary lead subcategory consists of preliminary treatment with oil skimming (where required), lime precipitation and sedimentation end-of-pipe technology. Total recycle of facility washdown and battery case classification wastewater is also required for Option A.

OPTION B

Option B for the secondary lead subcategory requires control and treatment technologies to reduce the discharge of wastewater volume and pollutant mass. The recycle of casting contact cooling water through cooling towers and the recycle of wet air pollution control water through holding tanks are the control mechanisms for flow reduction. The Option B end-of-pipe treatment technology consists of preliminary treatment with oil skimming (where required), plus lime precipitation and sedimentation with total recycle of facility washdown and battery case classification wastewater.

OPTION C

Option C for the secondary lead subcategory consists of all the control and treatment technologies of Option B (in-process flow reduction through cooling towers and holding tanks; lime precipitation and sedimentation and total recycle of facility washdown, and battery case classification wastewater end-of-pipe treatment, and preliminary treatment with oil skimming (where required)) with the addition of multimedia filtration to the end-of-pipe treatment scheme.

COST METHODOLOGY

A detailed discussion of the methodology used to develop the compliance costs is presented in Section VIII of the General Development Document. Plant-by-plant compliance costs have been estimated for the nonferrous metals manufacturing category and are presented in the administrative record supporting this regulation. A comparison of the proposal and the revised costs for the final regulation are presented in Tables VIII-1 and VIII-2 (page1973) for the direct and indirect dischargers, respectively.

Each of the major assumptions used to develop compliance costs are presented in Section VIII of Vol. 1. Each subcategory contains a unique set of waste streams requiring certain subcategory-specific assumptions to develop compliance costs. Seven major assumptions are discussed briefly below.

(1) For plants having existing treatment of insufficient capacity, the required capital costs are based on providing the incremental capacity needed and annual costs are based on operation of a single system at the expanded capacity.

(2) Information available to the Agency is not detailed enough to determine if all industrial hygiene waste streams, truck wash, and floor wash, are present at each plant. Therefore, where EPA had no information on these wastewater sources, the Agency assumed all of these are present at the regulatory flow rate. Although a discharge allowance for floor wash is not necessary, EPA included extra treatment capacity to accommodate this need. Acceptable floor wash water may be obtained from recycling treated wastewater. Therefore, costs are included for a holding tank after chemical precipitation and settling to recycle water for floor wash use under all options.

(3) Lime addition is used in most cases throughout the secondary lead subcategory in estimating costs for chemical precipitation. However, if a plant currently uses ammonia, soda ash, or caustic as the chemical precipitant, the costs are based on caustic addition.

(4) Annual costs for contract hauling are not included when sludge from existing treatment is recycled either to a smelter or back to a process. If a plant has a lagoon for sedimentation and sludge storage, the investment costs for sedimentation and vacuum filtration are not included since these technologies would probably not be installed to comply with the effluent limitations. However, operation and maintenance costs for these technologies (and contract hauling) were included as an estimate of the cost likely to be incurred by the plant to ultimately dispose of the sludge. All sludges

produced through wastewater treatment are considered to be nonhazardous in estimating costs. However, the EPA cost for solid waste disposal is equivalent to hazardous waste disposal. In addition, the Agency performed a sensitivity analysis in which sludge disposal costs were doubled without an increase in plant closures.

(5) Compliance costs for three plants that are integrated with battery manufacturing operations are estimated only for multimedia filtration of the amount of waste water associated with secondary lead operations. Costs were developed for a treatment configuration assuming filtration of an amount of wastewater equal to the secondary lead subcategory flow, following centralized lime and settle treatment of combined flows. At two plants the secondary lead flow consists only of wastewater from industrial hygiene practices. The third plant produces battery cracking, furnace scrubber, and kettle scrubber wastewater but at rates lower than the BPT regulatory discharge flows (see Section IX). The Agency adopted this method of costing because the plants are battery manufacturing plants, and the wastewater from the manufacturing operations is very large in comparison to the secondary lead wastewater flow. Therefore, all other compliance costs are attributed to the battery manufacturing regulation.

(6) The costs of holding tanks to achieve recycle of furnace scrubber liquor and kettle scrubber liquor were not included in compliance costs since the holding tanks are an integral part of the air pollution control system and are not the basis of wastewater treatment. All 17 plants operating furnace or kettle scrubbers practice recycle exceeding 83 percent.

(7) Recycle of casting contact cooling water is based on recycle through cooling towers. Annual costs associated with maintenance and chemicals to prevent biological growth, corrosion, and scale formation are included in the estimated compliance costs. If a plant currently recycles casting contact cooling water, capital costs of the recycled equipment (piping, pumps, and cooling towers) were not included in the compliance costs.

NONWATER QUALITY ASPECTS

Nonwater quality impacts specific to the secondary lead subcategory including energy requirements, solid waste and air pollution are discussed below.

ENERGY REQUIREMENTS

The methodology used for determining the energy requirements for the various options is discussed in Section VIII of Vol. 1. Energy requirements for the three options considered are estimated at 5.17 MW-hr/yr, 5.23 MW-hr/yr, and 5.42 MW-hr/yr for Options A, B, and C respectively. Option C represents roughly two percent of a typical plant's electrical usage. It is therefore concluded that the energy requirements of the treatment options considered will have no significant impact on total plant energy consumption. Option C would increase energy requirements over Option A by approximately 4.8 percent.

SOLID WASTE

Sludges associated with the secondary lead subcategory will necessarily contain additional quantities (and concentrations) of toxic metal pollutants.

Wastes generated by secondary metal industries can be regulated as hazardous. However, the Agency examined the solid wastes that would be generated at secondary lead plants by the suggested treatment technologies and believes they are not hazardous wastes under the Agency's regulations implementing Section 3001 of the Resource Conservation and Recovery Act. None of these wastes are listed specifically as hazardous, nor are they likely to exhibit a characteristic of hazardous waste. This judgment is made based on the recommended technology of lime precipitation, sedimentation and filtration. By the addition of excess lime (5-10 percent) during treatment, similar sludges, specifically toxic metal bearing sludges, generated by other industries such as the iron and steel industry passed the Extraction Procedure (EP) toxicity test. See 40 CFR 261.24. The Agency believes that the wastewater sludges will similarly not be EP toxic if the recommended technology is applied.

The Agency received several comments from the secondary lead subcategory claiming sludges generated through the use of lime as a wastewater treatment chemical were hazardous due to lead. To properly evaluate these comments, the Agency requested specific data and information from the commenters. From the material received, it appears lime sludges at two secondary lead and battery manufacturing plants sometimes exhibit toxicity due to lead (six of the 19 samples exhibited EP toxicity in the data submitted). The Agency contends these sludges would not have been classified as hazardous under RCRA if a small amount (5-10 percent) of excess lime had been used during wastewater treatment. (The Agency's trip reports for these facilities indicate that the facilities do not use excess lime to treat wastewater). A third plant (operated by one of the two companies), which tests its lime sludges on a batch-by-batch basis, indicated that it disposed of its wastewater treatment sludges as a hazardous material less than two percent of the time (over a two year period), indicating that operation of the treatment system affects sludge quality.

It is also the Agency's understanding, based on comments, that one of the facilities disposing of lime sludges as a hazardous waste has entered into an agreement with a local landfill at preferential rates. The Agency contends that if this plant did not have a local disposal site to dispose of its lime sludge as hazardous, it could operate its treatment system using excess lime, which would make the sludges nonhazardous.

The Agency has recalculated the compliance costs for the secondary lead subcategory on a plant-by-plant basis. In the cost model, a contract hauling fee of $90 per ton (as nonhazardous waste) was used in estimating annual costs. The Agency solicited data on sludge disposal costs and only received information from one corporation. Data submitted by the commenter show the contract hauling costs when sludges are disposed of as hazardous wastes ranging from $90 to $110 per ton. This would indicate that the Agency's sludge disposal costs are conservative when lime sludges are disposed of as nonhazardous wastes. In addition, the Agency doubled the contract hauling costs for secondary lead sludge from $90 per ton to $180 per ton and found no economic impacts for this subcategory.

The Agency also received comments stating it had not accounted for additional costs of sludge disposal in states where hazardous waste disposal is more stringent than the federal requirements. The Agency is not aware of any state regulations more stringent than the federal EP toxicity test, except for the state of California. However, California only requires additional paperwork for wastes that fail their procedure but pass the federal EP toxicity test, and does not impose additional disposal costs or requirements.

Although it is the Agency's view that solid wastes generated as a result of these guidelines are not expected to be hazardous, generators of these wastes must test the waste to determine if the wastes meet any of the characteristics of hazardous waste (see 40 CFR 262.11).

If these wastes should be identified or are listed as hazardous, they will come within the scope of RCRA's "cradle to grave" hazardous waste management program, requiring regulation from the point of generation to point of final disposition. EPA's generator standards would require generators of hazardous nonferrous metals manufacturing wastes to meet containerization, labeling, recordkeeping, and reporting requirements; if plants dispose of hazardous wastes off-site, they would have to prepare a manifest which would track the movement of the wastes from the generator's premises to a permitted off-site treatment, storage, or disposal facility. See 40 CFR 262.20 45 FR 33142 (May 19, 1980), as amended at 45 FR 86973 (December 31, 1980). The transporter regulations require transporters of hazardous wastes to comply with the manifest system to assure that the wastes are delivered to a permitted facility. See 40 CFR 263.20 45 FR 33151 (May 19, 1980), as amended at 45 FR 86973 (December

31, 1980). Finally, RCRA Regulations establish standards for hazardous waste treatment, storage, and disposal facilities allowed to receive such wastes. See 40 CFR Part 464 46 FR 2802 (January 12, 1981), 47 FR 32274 (July 26, 1982).

Even if these wastes are not identified as hazardous, they still must be disposed of in compliance with the Subtitle D open dumping standards, implementing 4004 of RCRA. See 44 FR 53438 (September 13, 1979). The Agency has calculated as part of the costs for wastewater treatment the cost of hauling and disposing of these wastes. EPA estimates that implementation of lime, settle, and filter technology will produce approximately 5,100 tons of sludge per year at 20 percent solids. Multimedia filtration technology will not result in any significant amount of sludge over that generated by lime precipitation.

AIR POLLUTION

There is no reason to believe that any substantial air pollution problems will result from implementation of chemical precipitation, sedimentation, and multimedia filtration. These technologies transfer pollutants to solid waste and do not involve air stripping or any other physical process likely to transfer pollutants to air. Water vapor containing some particulate matter will be released in the drift from cooling tower systems; however, the Agency does not consider this impact to be significant.

TABLE VIII-1

COST OF COMPLIANCE FOR THE SECONDARY LEAD SUBCATEGORY
DIRECT DISCHARGERS
(March, 1982 Dollars)

Option	Proposal Costs Capital	Proposal Costs Annual	Promulgation Costs Capital	Promulgation Costs Annual
A	639000	310000	1630000	1120000
B	639000	310000	1630000	1120000
C	2880000	1850000	1860000	1240000

TABLE VIII-2

COST OF COMPLIANCE FOR THE SECONDARY LEAD SUBCATEGORY
INDIRECT DISCHARGERS
(March, 1982 Dollars)

Option	Proposal Costs Capital	Proposal Costs Annual	Promulgation Costs Capital	Promulgation Costs Annual
A	1660000	758000	3690000	2240000
B	2020000	760000	3720000	2240000
C	4130000	2640000	4260000	2510000

Page Intentionally Blank

SECTION IX

BEST PRACTICABLE CONTROL TECHNOLOGY CURRENTLY AVAILABLE

This section defines the effluent characteristics attainable through the application of best practicable control technology currently available (BPT), Section 301(b)(a)(A). BPT reflects the existing performance by plants of various sizes, ages, and manufacturing processes within the secondary lead subcategory, as well as the established performance of the recommended BPT systems. Particular consideration is given to the treatment already in place at plants within the data base.

The factors considered in identifying BPT include the total cost of applying the technology in relation to the effluent reduction benefits from such application, the age of equipment and facilities involved, the manufacturing processes used, nonwater quality environmental impacts (including energy requirements), and other factors the Administrator considers appropriate. In general, the BPT level represents the average of the existing performances of plants of various ages, sizes, processes, or other common characteristics. Where existing performance is uniformly inadequate, BPT may be transferred from a different subcategory or category. Limitations based on transfer of technology are supported by a rationale concluding that the technology is, indeed, transfer able, and a reasonable prediction that it will be capable of achieving the prescribed effluent limits (see Tanner's Council of America v. Train, 540 F.2d 1188 (4th Cir. 1176). BPT focuses on end-of-pipe treatment rather than process changes or internal controls, except where such practices are common subcategory practice.

TECHNICAL APPROACH TO BPT

The Agency studied the nonferrous metals manufacturing category to identify the processes used, the wastewaters generated, and the treatment processes installed. Information was collected from industry using data collection portfolios, and specific plants were sampled and the wastewaters analyzed. Additional data used in the final rule were obtained through comments, new dcp, and specific data requests. Some of the factors which must be considered in establishing effluent limitations based on BPT have already been discussed. The age of equipment and facilities, processes used, and raw materials were taken into account in subcategorization and subdivision and are discussed fully in Section IV. Nonwater quality impacts and energy requirements are considered in Section VIII.

As explained in Section IV, the secondary lead subcategory has been segmented into 11 building blocks each of which is a potential wastewater sources. Since the water use, discharge rates, and pollutant characteristics of each of these wastewaters

is potentially unique, effluent limitations will be developed for each of the 11 building blocks.

For each of the segments, a specific approach was followed for the development of BPT mass limitations. To account for production and flow variability from plant to plant, a unit of production or production normalizing parameter (PNP) was determined for each waste stream which could then be related to the flow from the process to determine a production normalized flow. Selection of the PNP for each process element is discussed in Section IV. Each process within the subcategory was then analyzed to determine (1) whether or not operations included generated wastewater, (2) specific flow rates generated, and (3) the specific production normalized flows for each process. This analysis is discussed in detail in Section V. Nonprocess wastewater such as rainfall runoff and noncontact cooling water is not considered in the analysis.

Normalized flows were analyzed to determine which flow was to be used as part of the basis for BPT mass limitations. The selected flow (sometimes referred to as a BPT regulatory flow or BPT discharge rate) reflects the water use controls which are common practices within the subcategory. The BPT normalized flow is based on the average of all applicable data. Plants with normalized flows above the average may have to implement some method of flow reduction to achieve the BPT limitations. In most cases, this will involve improving housekeeping practices, better maintenance to limit water leakage, or reducing excess flow by turning down a flow valve. It is not believed that these modifications would incur any costs for the plants.

For the development of effluent limitations, mass limitations were calculated for each wastewater source or subdivision. This calculation was made on a stream-by-stream basis, primarily because plants in this category may perform one or more of the operations in various combinations. The mass limitations (milligrams of pollutant per kilogram of production unit -- mg/kg) were calculated by multiplying the BPT normalized flow (l/kkg) by the concentration achievable using the BPT treatment system (mg/l) for each pollutant parameter to be limited under BPT.

The mass limitations which are allowed under BPT for each plant will be the sum of the individual mass loadings for the various wastewater sources which are found at particular plants. Accordingly, all the wastewater generated within a plant may be combined for treatment in a single or common treatment system, but the effluent limitations for these combined wastewaters are based on the various wastewater sources which actually contribute to the combined flow. This method accounts for the variety of combinations of wastewater sources and production processes which may be found at secondary lead plants.

The Agency usually establishes wastewater limitations in terms of mass rather than concentration. This approach prevents the use

of dilution as a treatment method (except for controlling pH). The production normalized wastewater flow (l/kkg) is a link between the production operations and the effluent limitations. The pollutant discharge attributable to each operation can be calculated from the normalized flow and effluent concentration achievable by the treatment technology and summed to derive an appropriate limitation for each subcategory.

BPT effluent limitations are based on the average of the wastewater discharge flows for each building block combined with the commonly used treatment methods in the subcategory. Section VII discusses the various treatment technologies which are currently in place for each wastewater source. In most cases, the current treatment levels consist of chemical precipitation and sedimentation (lime and settle technology) and a combination of reuse and recycle to reduce flow.

The overall effectiveness of end-of-pipe treatment for the removal of wastewater pollutants is improved by the application of water flow controls within the process to limit the volume of wastewater requiring treatment. The controls or in-process technologies recommended under BPT include only those measures which are commonly practiced within the subcategory and which reduce flows to meet the production normalized flow for each operation.

In making technical assessments of data, reviewing manufacturing processes, and assessing wastewater treatment technology options, both indirect and direct dischargers have been considered as a single group. An examination of plants and processes did not indicate any process differences based on the type of discharge, whether it be direct or indirect.

INDUSTRY COST AND POLLUTANT REMOVAL ESTIMATES

In balancing costs in relation to pollutant removal estimates, EPA considers the volume and nature of existing discharges, the volume and nature of discharges expected after application of BPT, the general environmental effects of the pollutants, and the cost and economic impacts of the required pollution control level. The Act does not require or permit consideration of water quality problems attributable to particular point sources or industries, or water quality improvements in particular water quality bodies. Accordingly, water quality considerations were not the basis for selecting BPT. See Weyerhaeuser Company v. Costle, 590 F.2d 1011 (D.C. Cir. 1978).

The methodology for calculating pollutant removal estimates and plant compliance costs is discussed in Section X. Table X-2 (page 2002) shows the estimated pollutant removals for each treatment option for direct dischargers. Compliance costs for direct dischargers are presented in Table VIII-1 (page 1973).

BPT OPTION SELECTION

The BPT treatment scheme (Figure IX-1 page 1992) consists of complete recycle of facility washdown and battery case classification wastewater following chemical precipitation and sedimentation (lime and settle) end-of-pipe technology. Although a specific mass limitation is not provided for oil and grease, oil skimming is included in EPA cost estimates for battery cracking, furnace wet air pollution control, truck wash, laundry, hand wash, and respirator wash wastewater to ensure proper metals removal. Oil and grease interferes with the chemical addition and mixing required for chemical precipitation treatment. The BPT treatment is equivalent to Option A described in Section VII. The promulgated technology is equivalent to the proposed technology with the addition of oil skimming and the omission of complete recycle of kettle scrubbing wastewater. The promulgated BPT will result in the removal of approximately 25,354 kg/yr of toxic metal pollutants and 2,852,000 kg/yr of conventional pollutants from the estimated raw discharge. The estimated capital cost of BPT is $1,630,000 (March, 1982 dollars) and the estimated annual cost is $1,120,000 (March, 1982 dollars).

In the proposed limitations, ammonia was given a discharge allowance of zero to prevent the discharge of kettle scrubber liquor. Data gathered through special requests have shown those plants previously thought to be recycling kettle scrubber liquor 100 percent do actually have a periodic discharge. EPA is promulgating a discharge allowance of zero for ammonia for secondary lead plants. Ammonia in secondary lead wastewaters is the result of its use as a wastewater treatment chemical. Effluent data from a secondary lead plant were found to have ammonia in its treated effluent at an average concentration of 6,500 mg/l. It is the Agency's understanding that ammonia is used because it reduces the amount of sludge generated and produces a sludge more amenable for reuse as a raw material than lime sludges. However, the use of caustic as a wastewater treatment chemical is also widely demonstrated in the secondary lead subcategory. Caustic is as applicable as ammonia for reducing sludge generation and producing sludges that can be recycled. In developing plant-by-plant costs, the Agency provided costs for substituting neutralization with caustic for neutralization with lime or ammonia. This will eliminate the discharge of ammonia and still produce a sludge acceptable for recycling. However, if a plant chooses to continue using ammonia as a treatment chemical, it will have to maintain zero discharge of ammonia.

WASTEWATER DISCHARGE RATES

A BPT discharge rate is calculated for each subdivision based on the average of the flows of the existing plants, as determined from analysis of the dcp. The discharge rate is used with the achievable treatment concentrations to determine BPT effluent limitations. Since the discharge rate may be different for each wastewater source, separate production normalized discharge rates

for each of the 11 wastewater sources are discussed below and summarized in Table IX-1 (page 1985). The discharge rates generally are normalized on a production basis by relating the amount of wastewater generated to the mass of the intermediate product which is produced by the process associated with the waste stream in question. These production normalizing parameters, or PNP's, are also listed in Table IX-1.

In light of the comments received on the flow allowances used in the 1983 proposal, the Agency reviewed existing flow and production information from data collection portfolios and solicited additional information through specific data requests. The Agency also performed engineering site visits at two integrated secondary lead and battery manufacturing plants. These additional data have been used by the Agency to develop flow allowances for five waste streams not considered at proposal. Three of these wastewater streams -- hand wash, respirator wash, and laundries -- result from occupational hygiene needs. Flow allowances have also been developed for truck washing. The Agency also considered whether to provide allowances for three other streams, facility washdown, lead paste desulfurization, and battery case classification, but determined that no allowance required because treated effluent can be used as makeup water or because complete recycle and reuse is practiced. Flow allowances for each of the 11 wastewater streams identified in the secondary lead subcategory are discussed below.

BATTERY CRACKING

The BPT wastewater discharge rate used at proposal for battery cracking was 940 l/kkg (225 gal/ton) of lead produced. All 32 of the plants with this process discharged this wastewater at rates ranging from 80.5 to 5,086 l/kkg (19.3 to 1,220 gal/ton). None of the plants practiced recycle of this wastewater, therefore the BPT rate was the average discharge rate of 32 plants.

The BPT wastewater discharge rate for battery cracking is 673 l/kkg (161 gal/ton) of lead scrap produced. This rate is based on the average of the discharge flows from 30 plants with this process. Water use and discharge rates are presented in Table V-1. The promulgated BPT allowance is different from the proposed BPT allowance because two plants included in the calculation of the allowance at proposal were deleted from the average at promulgation. Plants 266 and 272 were excluded from the average because of excessive water use compared to the other 30 plants. The Agency believes there is no technical justification for such high water usage. Data from five plants which submitted new dcps subsequent to proposal further support the promulgated BPT allowance. Inclusion of the new data in the calculation of the regulatory flow allowance could have resulted in a difference of less than four percent from the promulgated allowance (673 l/kkg). The Agency received no comments requesting differentiation in flow allowances based on battery breaking methods.

Since the new data support the promulgated flow allowance, the new data were not included in the regulatory flow calculation. Twenty of the 35 plants with this wastewater stream meet the BPT discharge rate.

BLAST, REVERBERATORY, OR ROTARY FURNACE WET AIR POLLUTION CONTROL

The BPT regulatory wastewater discharge rate for blast and reverberatory furnace wet air pollution control was 3,380 l/kkg (811 gal/ton) of lead produced. This rate was allocated only for those plants having wet air pollution control for smelting operations. Of the 47 plants with this process, seven used wet air scrubbing devices. One of the seven plants did not report sufficient production data to calculate a discharge rate but reported a recycle rate of 97.8 percent. One plant discharged with no recycle. Two plants practiced partial recycle, ranging from 83.3 to 93.3 percent. (One plant operates two separate scrubbers on different smelting furnaces.) Two of the seven plants achieved zero discharge by 100 percent recycle. Extensive recycling is possible for this wastewater stream, but a zero discharge may not be technically feasible unless a recycle system controls dissolved solids build-up, the wastewater is evaporated, or there is a production operation that can accept the quality of treated wastewater. Some of these zero discharge possibilities are site-specific and, therefore, are not applicable to the secondary lead subcategory as a whole. The discharge rates from the four discharging scrubbers ranged from 1,776 to 6,587 l/kkg (426 to 1,580 gal/ton). The average of these four discharges was the basis for the BPT rate. Wastewater rates for blast and reverberatory furnace wet air pollution control are presented in Table V-3 of the proposed secondary lead supplemental development document.

The BPT regulatory wastewater discharge rate for furnace wet air pollution control is 2,610 l/kkg (626 gal/ton) of lead produced from smelting. This rate is based on 90 percent recycle of the average water use for three scrubbers at Plants 265 and 272. (One plant operates separate scrubbers on two smelting furnaces). The actual recycle rates of the three scrubbers range from 83.3 to 93.3 percent. Recycle exceeding 83 percent is demonstrated for all eight furnace scrubbers currently operated in the subcategory. Water use and discharge rates are presented in Table V-3 (page 1889). The final BPT regulatory discharge allowance differs from the proposed BPT discharge allowance. As discussed above, the proposed allowance was based on the average wastewater discharge from four scrubbers at three plants. One of these plants did not practice recycle and has since shut down its scrubber. This plant (#266) was not included in the calculation of the promulgated discharge allowance because no recycle was practiced at this plant and the allowance is based on widely demonstrated recycle. Data from new dcps received subsequent to proposal were also excluded from calculation of the discharge allowance. One plant reports recycling 99.8 percent of its scrubber water but does not provide sufficient information to

calculate production normalized water use. A second plant (#6602), which practices 95 percent recycle, was excluded from the calculation of the discharge allowance because of excessive water use. The water use at this plant is almost four times that of the highest water user included in the calculation. The Agency believes there is no technical justification for such high water use. All seven plants operating furnace scrubbers use alkaline scrubber solutions to neutralize the sulfur oxides (SO_x) removed from the furnace off-gases. Neutralizing agents used are lime, caustic, soda ash, and ammonia. The Agency received no comments requesting differentiation in flow allowances based on type of scrubber solution. Three of the five plants reporting sufficient information to calculate discharge rates meet the promulgated BPT discharge rate.

KETTLE WET AIR POLLUTION CONTROL

No BPT regulatory wastewater discharge allowance was provided for kettle scrubbing wastewater at proposal. Twenty-eight plants reported controlling kettle air emissions; 19 used dry controls (baghouses), and nine used scrubbers. Six plants reported practicing complete recycle of the scrubber liquor and one plant used the liquor in the battery cracking and decasing operation. The remaining two plants practiced recycle of 91.7 and 96 percent. Since complete recycle of kettle scrubber wastewater was so widely demonstrated in this subcategory, the Agency believed that zero discharge of wastewater pollutants was feasible for all secondary lead kettle wet air pollution control.

The BPT regulatory wastewater discharge allowance is 45 l/kkg (11 gal/ton) of lead produced from refining. Data gathered through specific data requests after proposal have shown those plants previously thought to practice 100 percent recycle of kettle scrubber liquor actually have a periodic discharge. As shown in Table V-5 (page 1894), only three plants reported sufficient information to calculate production normalized discharge rates. The BPT regulatory discharge rate is based on the discharge from Plant 224, which practices 99.2 percent recycle if the periodic discharge is normalized on a continuous basis. Plants 264 and 273 were excluded because of excessively high discharge rates compared to Plant 224. The discharge rate for Plants 264 and 273 are approximately two times and 40 times higher, respectively, than the discharge rate for Plant 224. The Agency can find no technical reason for such variation in discharge practices at these plants.

LEAD PASTE DESULFURIZATION

No BPT wastewater discharge allowance is provided for lead paste desulfurization. Only one plant currently operates this process and no wastewater is discharged.

CASTING CONTACT COOLING WATER

The BPT wastewater discharge rate used at proposal for casting contact cooling water was 221 l/kkg (53.1 gal/ton) of lead cast. At proposal, 11 of the 66 secondary lead plants with casting operations, generated wastewater from the process. Three plants practiced total recycle and two plants reported discharging "insignificant" amounts of wastewater. Six plants were once-through dischargers, with flow rates ranging from 5 to 963 l/kkg (1 to 231 gal/ton). Wastewater rates for casting contact cooling are presented in Table V-7 (page 1896). The BPT discharge rate was based on the average of the six discharging plants.

The BPT regulatory discharge allowance for casting contact cooling is 221 l/kkg (53.1 gal/ton) of lead cast. This is equivalent to the proposed flow allowance. The Agency received no new flow data for casting contact cooling and thus sees no reason to change the proposed allowance.

TRUCK WASH

The BPT regulatory wastewater discharge rate for truck wash is 21 l/kkg (5 gal/ton) of lead produced from smelting. This allowance includes wastewater discharge from washing pallets on which scrap batteries are transported. Although many plants which crack batteries generate wastewater from truck and pallet washing, the Agency measured flow data from only two plants. However, there is no reason to think that truck and pallet washing varies appreciably from plant to plant. Truck wash flows were calculated by measuring the water flow rate from hoses used for washing and the time required to wash a truck. The pallet washing flow was calculated by multiplying the average number of pallets per truck by the average flow rate from the hoses used to wash the trucks and an assumed time needed to wash one pallet. The number of pallets contained in a truck was calculated from average truck dimensions and was determined to be 20. The washing of one pallet was assumed to take 10 seconds. The pallet flow was calculated as 125 liters (33 gallons) per truck. Truck wash at two facilities was measured at 151 liters (40 gallons) and 125 liters (33 gallons) per truck. The production normalized flow rates for combined truck and pallet wash are presented in Table V-8 (page 1896). The BPT regulatory flow rate is the average production normalized discharge at the two plants with the addition of pallet washing.

FACILITY WASHDOWN

No BPT wastewater discharge allowance is provided for facility washdown. The Agency believes this wastewater can be treated and reused as wash water. Recycle or reuse of this wastewater after treatment is currently demonstrated in four of the nine plants reporting this wastewater. Compliance costs include the larger size treatment equipment needed to accommodate this wastewater stream.

BATTERY CASE CLASSIFICATION

No BPT wastewater discharge allowance is provided for battery case classification wastewater. The Agency believes this wastewater can be treated and reused in this process based on demonstrated practices. Four of the eight plants with this wastewater stream currently reuse battery case classification wastewater after treatment. Compliance costs include the larger size treatment equipment needed to accommodate this waste stream.

EMPLOYEE HAND WASH

The BPT regulatory wastewater discharge allowance for employee hand wash is 27 l/kkg (6.5 gal/ton) of lead produced from smelting. This allowance is needed for plants to meet industrial hygiene requirements. Since flow data were not available for all but two plants in the subcategory, the discharge allowance was determined in the following manner. Available production data and number of employees at each plant (taken from the dcp) were used to calculate a factor of 0.0217 employees per year per ton of smelting production. From sampling efforts at two integrated secondary lead battery manufacturing plants, it was determined that the average employee uses 1,132.5 liters (300 gallons) per year of water for hand wash (based on three washes per day, 250 days per year). This results in the production normalized flow of 27 l/kkg (6.5 gal/ton).

EMPLOYEE RESPIRATOR WASH

The BPT wastewater discharge allowance for employee respirator wash is 44 l/kkg (10.5 gal/ton) of lead produced from smelting. This allowance is needed for plants to meet industrial hygiene requirements. This allowance was determined with the same method used for employee hand wash. The production factor of 0.0217 employees per year per ton of production was multiplied by the average water use per employee at two plants (1,836 liters or 485 gallons per year).

LAUNDERING OF UNIFORMS

The BPT regulatory wastewater discharge allowance for laundering of uniforms is 128 l/kkg (30.7 gal/ton) of lead produced from smelting. This allowance is needed for plants to meet industrial hygiene requirements. The methodology used to determine this rate is the same as employee handwash. From the sampling effort, it was found that the average water use per employee is 5,356 liters (1,415 gallon) per year. The production factor is 0.0217 employees per year per ton of production. This results in the allowance of 129 l/kkg (30.7 gal/ton). This allowance is only intended for those plants that launder uniforms on-site.

REGULATED POLLUTANT PARAMETERS

The raw wastewater concentrations from individual operations and the subcategory as a whole were examined to select certain

pollutants and pollutant parameters for consideration for limitation. This examination and evaluation was presented in Section VI. A total of seven pollutants or pollutant parameters are selected for limitation under BPT and are listed below:

114. antimony
115. arsenic
122. lead
128. zinc

ammonia
total suspended solids (TSS)
pH

EFFLUENT LIMITATIONS

The treatable concentrations achievable by the proposed BPT treatment scheme are explained in Section VII of Vol. 1 and summarized there in Table VII-21 (page 248). The treatable concentrations (both one day maximum and monthly average values) are multiplied by the BPT normalized discharge flows summarized in Table IX-1 to calculate the mass of pollutants allowed to be discharged per mass of product. The results of these calculations in milligrams of pollutant per kilogram of product represent the BPT effluent limitations and are presented in Table IX-2 (page 1986) for each individual waste stream.

Table IX-1

BPT WASTEWATER DISCHARGE RATES FOR THE SECONDARY LEAD SUBCATEGORY

Wastewater Stream	BPT Normalized Discharge Rate		Production Normalizing Parameter
	l/kkg	gal/ton	
Battery Cracking	673	161	kkg of lead scrap produced
Furnace Wet Air Pollution Control	2,610	626	kkg of lead produced from smelting
Kettle Wet Air Pollution Control	45	11	kkg of lead produced from kettle furnaces
Lead Paste Desulfurization	0	0	kkg of lead processed through desulfurization
Casting Contact Cooling Water	221	53	kkg of lead cast
Truck Wash	21	5	kkg of lead produced from smelting
Facility Washdown	0	0	kkg of lead produced from smelting
Battery Case Classification	0	0	kkg of lead scrap produced
Employee Hand Wash	27	6.5	kkg of lead produced from smelting
Employee Respirator Wash	44	10.5	kkg of lead produced from smelting
Laundering of Uniforms	128	30.7	kkg of lead produced from smelting

TABLE IX-2

BPT EFFLUENT LIMITATIONS FOR THE SECONDARY LEAD SUBCATEGORY

(a) Battery Cracking BPT

Pollutant or Pollutant Property	Maximum for Any One Day	Maximum for Monthly Average
Metric Units - mg/kg of lead scrap produced English Units - lbs/million lbs of lead scrap produced		
*Antimony	1.932	0.861
*Arsenic	1.407	0.579
Cadmium	0.229	0.101
Chromium	0.296	0.121
Copper	1.279	0.673
*Lead	0.283	0.135
Nickel	1.292	0.855
Silver	0.276	0.114
Thallium	1.380	0.612
*Zinc	0.983	0.411
*Ammonia (as N)	0.000	0.000
*TSS	27.590	13.120
*pH	Within the range of 7.5 to 10.0 at all times	

(b) Blast, Reverberatory, or Rotary Furnace Wet Air Pollution Control BPT

Pollutant or Pollutant Property	Maximum for Any One Day	Maximum for Monthly Average
Metric Units - mg/kg of lead produced from smelting English Units - lbs/million lbs of lead produced from smelting		
*Antimony	7.491	3.341
*Arsenic	5.455	2.245
Cadmium	0.887	0.392
Chromium	1.148	0.470
Copper	4.959	2.610
*Lead	1.096	0.522
Nickel	5.011	3.315
Silver	1.070	0.444
Thallium	5.351	2.375
*Zinc	3.811	1.592
*Ammonia (as N)	0.000	0.000
*TSS	107.000	50.900
*pH	Within the range of 7.5 to 10.0 at all times	

*Regulated Pollutant

TABLE IX-2 (Continued)

BPT EFFLUENT LIMITATIONS FOR THE SECONDARY LEAD SUBCATEGORY

(c) Kettle Wet Air Pollution Control BPT

Pollutant or Pollutant Property	Maximum for Any One Day	Maximum for Monthly Average
Metric Units - mg/kg of lead produced from refining English Units - lbs/million lbs of lead produced from refining		
*Antimony	0.129	0.058
*Arsenic	0.094	0.039
Cadmium	0.015	0.007
Chromium	0.020	0.008
Copper	0.086	0.045
*Lead	0.016	0.009
Nickel	0.086	0.057
Silver	0.018	0.008
Thallium	0.092	0.041
*Zinc	0.066	0.027
*Ammonia (as N)	0.000	0.000
*TSS	1.845	0.878
*pH	Within the range of 7.5 to 10.0 at all times	

(d) Lead Paste Desulfurization BPT

Pollutant or Pollutant Property	Maximum for Any One Day	Maximum for Monthly Average
Metric Units - mg/kg of lead produced through desulfurization English Units - lbs/million lbs of lead produced through desulfurization		
*Antimony	0.000	0.000
*Arsenic	0.000	0.000
Cadmium	0.000	0.000
Chromium	0.000	0.000
Copper	0.000	0.000
*Lead	0.000	0.000
Nickel	0.000	0.000
Silver	0.000	0.000
Thallium	0.000	0.000
*Zinc	0.000	0.000
*Ammonia (as N)	0.000	0.000
*TSS	0.000	0.000
*pH	Within the range of 7.5 to 10.0 at all times	

*Regulated Pollutant

TABLE IX-2 (Continued)

BPT EFFLUENT LIMITATIONS FOR THE SECONDARY LEAD SUBCATEGORY

(e) Casting Contact Cooling BPT

Pollutant or Pollutant Property	Maximum for Any One Day	Maximum for Monthly Average
Metric Units - mg/kg of lead cast English Units - lbs/million lbs of lead cast		
*Antimony	0.634	0.283
*Arsenic	0.462	0.190
Cadmium	0.075	0.033
Chromium	0.097	0.040
Copper	0.420	0.221
*Lead	0.093	0.044
Nickel	0.424	0.281
Silver	0.091	0.038
Thallium	0.453	0.201
*Zinc	0.323	0.135
*Ammonia (as N)	0.000	0.000
*TSS	9.061	4.310
*pH	Within the range of 7.5 to 10.0 at all times	

(f) Truck Wash BPT

Pollutant or Pollutant Property	Maximum for Any One Day	Maximum for Monthly Average
Metric Units - mg/kg of lead produced from smelting English Units - lbs/million lbs of lead produced from smelting		
*Antimony	0.060	0.027
*Arsenic	0.044	0.018
Cadmium	0.007	0.003
Chromium	0.009	0.004
Copper	0.040	0.021
*Lead	0.009	0.004
Nickel	0.040	0.027
Silver	0.009	0.004
Thallium	0.043	0.019
*Zinc	0.031	0.013
*Ammonia (as N)	0.000	0.000
*TSS	0.861	0.410
*pH	Within the range of 7.5 to 10.0 at all times	

*Regulated Pollutant

TABLE IX-2 (Continued)

BPT EFFLUENT LIMITATIONS FOR THE SECONDARY LEAD SUBCATEGORY

(g) Facility Washdown BPT

Pollutant or Pollutant Property	Maximum for Any One Day	Maximum for Monthly Average
Metric Units - mg/kg of lead produced from smelting English Units - lbs/million lbs of lead produced from smelting		
*Antimony	0.000	0.000
*Arsenic	0.000	0.000
Cadmium	0.000	0.000
Chromium	0.000	0.000
Copper	0.000	0.000
*Lead	0.000	0.000
Nickel	0.000	0.000
Silver	0.000	0.000
Thallium	0.000	0.000
*Zinc	0.000	0.000
*Ammonia (as N)	0.000	0.000
*TSS	0.000	0.000
*pH	Within the range of 7.5 to 10.0 at all times	

(h) Battery Case Classification BPT

Pollutant or Pollutant Property	Maximum for Any One Day	Maximum for Monthly Average
Metric Units - mg/kg of lead scrap produced English Units - lbs/million lbs of lead scrap produced		
*Antimony	0.000	0.000
*Arsenic	0.000	0.000
Cadmium	0.000	0.000
Chromium	0.000	0.000
Copper	0.000	0.000
*Lead	0.000	0.000
Nickel	0.000	0.000
Silver	0.000	0.000
Thallium	0.000	0.000
*Zinc	0.000	0.000
*Ammonia (as N)	0.000	0.000
*TSS	0.000	0.000
*pH	Within the range of 7.5 to 10.0 at all times	

*Regulated Pollutant

TABLE IX-2 (Continued)

BPT EFFLUENT LIMITATIONS FOR THE SECONDARY LEAD SUBCATEGORY

(i) Employee Handwash BPT

Pollutant or Pollutant Property	Maximum for Any One Day	Maximum for Monthly Average
Metric Units - mg/kg of lead produced from smelting English Units - lbs/million lbs of lead produced from smelting		
*Antimony	0.077	0.035
*Arsenic	0.056	0.023
Cadmium	0.009	0.004
Chromium	0.012	0.005
Copper	0.051	0.027
*Lead	0.011	0.005
Nickel	0.052	0.034
Silver	0.011	0.005
Thallium	0.055	0.025
*Zinc	0.039	0.016
*Ammonia (as N)	0.000	0.000
*TSS	1.107	0.527
*pH	Within the range of 7.5 to 10.0 at all times	

(i) Employee Respirator Wash BPT

Pollutant or Pollutant Property	Maximum for Any One Day	Maximum for Monthly Average
Metric Units - mg/kg of lead produced from smelting English Units - lbs/million lbs of lead produced from smelting		
*Antimony	0.126	0.056
*Arsenic	0.092	0.038
Cadmium	0.015	0.007
Chromium	0.019	0.008
Copper	0.084	0.044
*Lead	0.018	0.009
Nickel	0.084	0.056
Silver	0.018	0.007
Thallium	0.090	0.040
*Zinc	0.064	0.027
*Ammonia (as N)	0.000	0.000
*TSS	1.804	0.858
*pH	Within the range of 7.5 to 10.0 at all times	

*Regulated Pollutant

TABLE IX-2 (Continued)

BPT EFFLUENT LIMITATIONS FOR THE SECONDARY LEAD SUBCATEGORY

(j) Laundering Uniforms BPT

Pollutant or Pollutant Property	Maximum for Any One Day	Maximum for Monthly Average
Metric Units - mg/kg of lead produced from smelting English Units - lbs/million lbs of lead produced from smelting		
*Antimony	0.367	0.164
*Arsenic	0.268	0.110
Cadmium	0.044	0.019
Chromium	0.056	0.023
Copper	0.243	0.128
*Lead	0.054	0.026
Nickel	0.246	0.163
Silver	0.052	0.022
Thallium	0.262	0.116
*Zinc	0.187	0.078
*Ammonia (as N)	0.000	0.000
*TSS	5.248	2.496
*pH	Within the range of 7.5 to 10.0 at all times	

*Regulated Pollutant

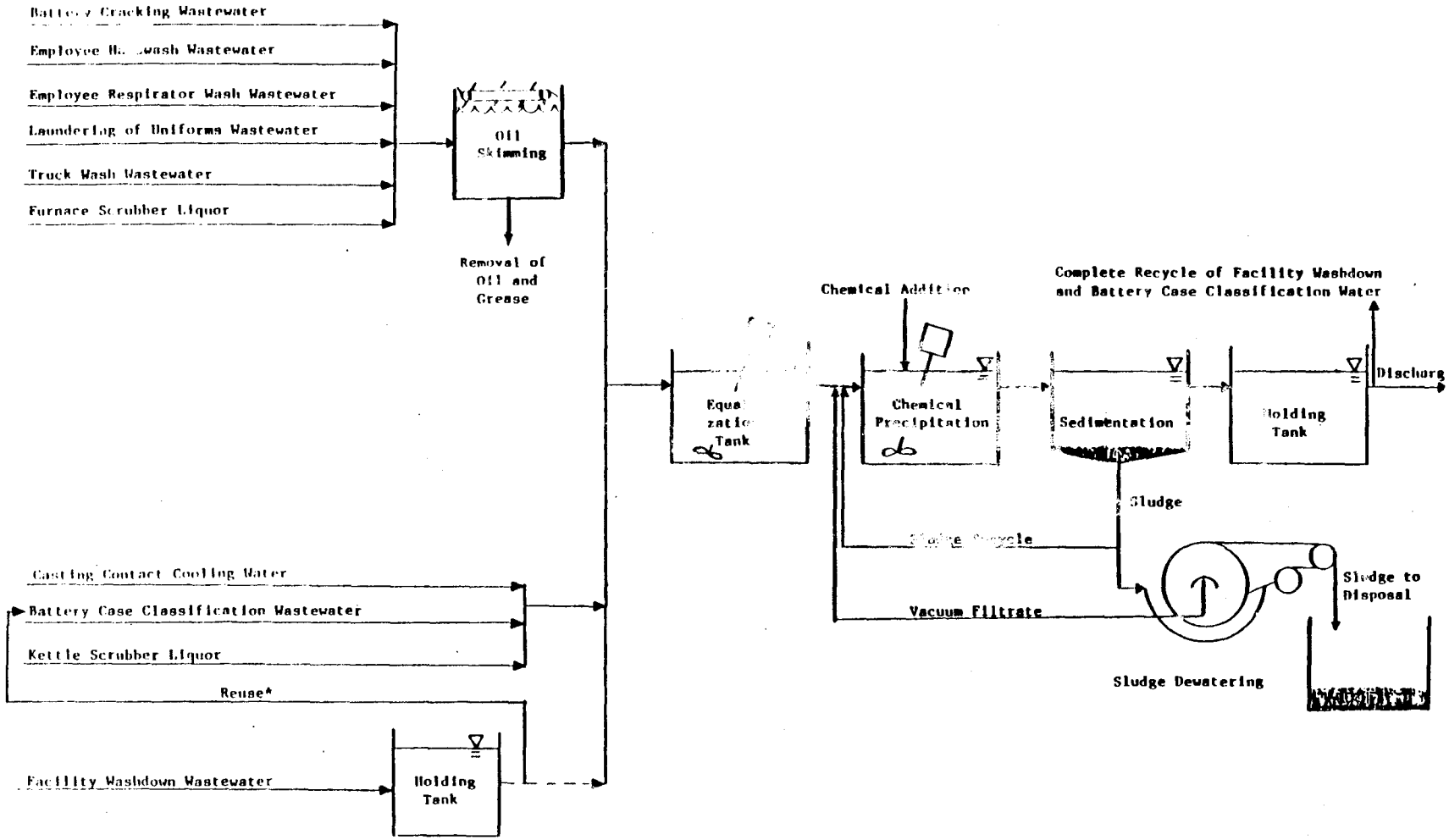

*Facility Washdown Wastewater is reused as Battery Case Classification makeup water. Any excess Facility Washdown Wastewater is sent to treatment.

Figure IX-1

BPT TREATMENT SCHEME

SECTION X

BEST AVAILABLE TECHNOLOGY ECONOMICALLY ACHIEVABLE

These effluent limitations are based on the best control and treatment technology used by a specific point source within the industrial category or subcategory, or by another category where it is transferable. Emphasis is placed on additional treatment techniques applied at the end of the treatment systems currently used, as well as reduction of the amount of water used and discharged, process control, and treatment technology optimization.

The factors considered in assessing best available technology economically achievable (BAT) include the age of equipment and facilities involved, the process used, process changes, nonwater quality environmental impacts (including energy requirements), and the costs of application of such technology (Section 304(b)(2)(B) of the Clean Water Act). BAT represents the best available technology economically achievable at plants of various ages, sizes, processes, or other characteristics. Where the Agency has found the existing performance to be uniformly inadequate, BAT may be transferred from a different subcategory or category. BAT may include process changes or internal controls, even when not in common subcategory practice.

The statutory assessment of BAT considers costs, but does not require a balancing of costs against effluent reduction benefits (see Weyerhaeuser v. Costle, 590 F.2d 1011 (D.C. Cir. 1978)). However, in assessing BAT, the Agency has given substantial weight to the economic achievability of the technology.

TECHNICAL APPROACH TO BAT

The Agency reviewed and evaluated a wide range of technology options to ensure that the most effective and beneficial technologies were used as the basis of BAT. The Agency examined three technology options which could be applied to the secondary lead subcategory as alternatives for the basis of BAT effluent limitations.

In summary, the treatment technologies considered for BAT are presented below:

Option A is based on:

- Preliminary treatment with oil skimming (where required),
- Chemical precipitation and sedimentation, and
- Complete recycle of facility washdown and battery case classification wastewater after treatment.

Option B is based on:

- o In-process flow reduction of casting contact cooling water,
- o Preliminary treatment with oil skimming (where required),
- o Chemical precipitation and sedimentation, and
- o Complete recycle of facility washdown and battery classification wastewater after treatment.

Option C is based on:

- o In-process flow reduction of casting contact cooling water,
- o Preliminary treatment with oil skimming (where required),
- o Chemical precipitation and sedimentation,
- o Complete recycle of facility washdown and battery case classification wastewater after treatment, and
- o Multimedia filtration.

The three options examined for BAT are discussed in greater detail below. The first option considered (Option A) is the same as the BPT treatment technology which was presented in the previous section.

OPTION A

Option A for the secondary lead subcategory is equivalent to the control and treatment technologies which were analyzed for BPT in Section IX. The BPT end-of-pipe treatment scheme consists of preliminary treatment with oil skimming (where required), chemical precipitation, and sedimentation (lime and settle) end-of-pipe technology (see Figure X-1 page 2009). Although a specific mass limitation is not provided for oil and grease at BAT, oil skimming is needed to remove oil and grease from battery cracking, furnace wet air pollution control, truck wash, laundry, hand wash, and respirator wash wastewater to ensure proper metals removal. Oil and grease interferes with chemical addition and mixing required for chemical precipitation treatment. The discharge rates for Option A are equal to the discharge rates allocated to each stream as a BPT discharge flow.

OPTION B

Option B for the secondary lead subcategory achieves lower pollutant discharge by building upon the Option A end-of-pipe treatment technology. In-process flow reduction measures are added to the Option A treatment consisting of oil skimming, chemical precipitation and sedimentation (see Figure X-2 page 2010). These flow reduction measures result in concentration of pollutants in other effluents. As previously explained, treatment of a more concentrated effluent allows achievement of a greater net pollutant removal and introduces possible economic benefits associated with treating a lower volume of wastewater.

The following method is used in Option B to reduce process waste water generation and discharge rates:

Recycle of Casting Contact Cooling Water Through Cooling Towers

The function of casting contact cooling water is to quickly remove heat from the newly formed lead ingots. Therefore, the principal requirements of the water are that it be cool and not contain dissolved solids at a concentration that would cause water marks or other surface imperfections. There is sufficient experience within the category with the cooling and recycling of casting contact cooling wastewater to assure the success of this technology using cooling towers or heat exchangers. Recycle is currently practiced at two of the eight plants in the secondary lead subcategory reporting data for casting contact cooling. A blowdown or periodic cleaning is likely to be needed to prevent a build-up of dissolved and suspended solids. EPA has determined that a blowdown of 10 percent of the water applied in a process is adequate.

OPTION C

Option C for the secondary lead subcategory consists of the Option B treatment in-process flow reduction, oil skimming (where required), chemical precipitation, sedimentation, and complete recycle of treated facility washdown and battery case classification wastewater plus multimedia filtration technology added at the end of Option B treatment (see Figure X-3 page 2011). Multimedia filtration is used to remove suspended solids, including precipitates of toxic metals, beyond the concentration attainable by gravity sedimentation. The filter suggested is of the gravity, mixed media type, although other filters, such as rapid sand filters or pressure filters, would perform satisfactorily.

INDUSTRY COST AND POLLUTANT REMOVAL ESTIMATES

As a means of evaluating each technology option, EPA developed estimates of the pollutant removal estimates and the compliance costs associated with each option. The methodologies are described below.

POLLUTANT REMOVAL ESTIMATES

A complete description of the methodology used to calculate the estimated pollutant removal achieved by the application of the various treatment options is presented in Section X of Vol. I. The pollutant removal estimates have been revised from proposal based on comments and new data. However, the methodology for calculating pollutant removals was not changed. The data used for estimating pollutant removals are the same as those used to revise the compliance costs.

Sampling data collected during the field sampling program were used to characterize the major wastewater streams considered for

regulation. At each sampled facility, the sampling data were production normalized for each building block (i.e., mass of pollutant generated per mass of product manufactured). This value, referred to as the raw waste, was used to estimate the mass of toxic pollutants generated within the secondary lead subcategory. By multiplying the total subcategory production for a unit operation by the corresponding raw waste value, the mass of pollutant generated for that unit operation was estimated.

The volume of wastewater discharged after the application of each treatment option was estimated for each operation at each plant by comparing the actual discharge to the regulatory flow. The smaller of the two values was selected and summed with the other plant flows. The mass of pollutant discharged was then estimated by multiplying the achievable concentration values attainable by the option (mg/l) by the estimated volume of process wastewater discharged by the subcategory. The mass of pollutant removed is simply the difference between the estimated mass of pollutant generated within the subcategory and the mass of pollutant discharged after application of the treatment option.

The pollutant removal estimates for direct discharges in the secondary lead subcategory are presented in Table X-1 (page 2001).

COMPLIANCE COSTS

Compliance costs estimated at proposal were estimated using cost curves, which related the total costs associated with installation and operation of wastewater treatment technologies to plant process wastewater discharge. EPA applied these curves on a per plant basis, a plant's costs -- both capital, and operating and maintenance -- being determined by what treatment it has in place and by its individual process wastewater discharge (from dcp). The final step was to annualize the capital costs, and to sum the annualized capital costs, and the operating and maintenance costs, yielding the total annual cost of compliance for the subcategory.

Since proposal, the cost estimation methodology has been changed as discussed in Section VIII of this supplement. A design model and plant specific information were used to size a wastewater treatment system for each discharging facility. After completion of the design, capital and annual costs were estimated for each unit of the wastewater treatment system. Capital costs rely on vendor quotes, while annual costs were developed from the literature. The revised compliance costs for direct dischargers are presented in Table VIII-1 (page 1973).

BAT OPTION SELECTION - PROPOSAL

At proposal, EPA selected both Option B and Option C as the basis for alternative BAT effluent limitations for the secondary lead subcategory due to current adverse structural economic changes that were not reflected in the Agency's economic analysis. These

alternative limitations were based on lime precipitation, sedimentation, and in-process control technologies to reduce the volume of process wastewater discharged for Option B and the addition of multimedia filtration for Option C.

Activated alumina (Option D) was considered; however, this technology was rejected because it was not demonstrated in this subcategory nor was it clearly transferable to nonferrous wastewater. Reverse osmosis (Option F) was considered for the purpose of achieving zero discharge of process wastewater; however, the Agency ultimately rejected this technology because it was determined that its performance for this specific purpose was not adequately demonstrated in this subcategory nor was it clearly transferable from another subcategory or category.

BAT OPTION SELECTION - PROMULGATION

After proposal the Agency obtained data through special requests, dcp submittals, and telephone contacts. Additionally, two secondary lead facilities were sampled to further characterize wastewater. The new data were used to recalculate compliance costs and pollutant removal estimates and evaluate regulatory flow allowances where appropriate.

EPA is promulgating BAT effluent mass limitations based on the promulgated BPT treatment with additional reduction in pollutant discharge achieved through in-process flow reduction over BPT levels and the use of multimedia filtration as an effluent polishing step. The BAT treatment consists of preliminary treatment with oil skimming (where required), in-process flow reduction, lime precipitation, sedimentation, and multimedia filtration. Wastewater flow reduction over BPT levels is based on recycle of casting contact cooling water through cooling towers. The promulgated BAT flow allowances are identical to the promulgated BPT flow allowances except for casting contact cooling. The end-of-pipe treatment technology basis for BAT limitations being promulgated is the same as that for the proposed Alternative B limitations. The Agency has revised the compliance costs and economic analysis. Results of this analysis indicate filtration as an end-of-pipe polishing step is economically achievable.

Implementation of the promulgated BAT would remove 25,700 kg of toxic metals annually. The promulgated BAT effluent mass limitations will result in the removal of 350 kg/yr of toxic pollutants above the estimated BPT discharge. The selected option is economically achievable. The Agency believes this incremental removal justifies selection of filtration as part of BAT model technology. In addition, filtration is demonstrated at seven secondary lead plants. The estimated capital investment cost of BAT is $1.86 million (March, 1982 dollars) and the estimated annual cost is $1.24 million (March, 1982 dollars).

As discussed in the BPT Option Selection, EPA is promulgating zero discharge of ammonia for secondary lead plants. Ammonia in

secondary lead wastewaters is the result of its use as a wastewater treatment chemical.

It is the Agency's understanding that ammonia is used because it reduces the amount of sludge generated and produces a sludge more amenable for reuse as a raw material than lime sludges. However, the use of caustic as a wastewater treatment chemical is also widely demonstrated in the secondary lead subcategory. Caustic is as applicable as ammonia for reducing sludge generation and producing sludges that can be recycled. In developing plant-by-plant costs, the Agency evaluated costs for substituting neutralization with caustic for neutralization with lime or ammonia. This will eliminate the discharge of ammonia and still produce a sludge acceptable for recycling. However, if a plant chooses to continue using ammonia as a treatment chemical, it will have to maintain zero discharge of ammonia.

WASTEWATER DISCHARGE RATES

A BAT discharge rate was calculated for each subdivision based upon the flows of the existing plants, as determined from analysis of the data collection portfolios. The discharge rate is used with the achievable treatment concentration to determine BAT effluent limitations. Since the discharge rate may be different for each wastewater source, separate production normalized discharge rates for each of the 11 wastewater sources were determined and are summarized in Table X-2 (page 2002). The discharge rates are normalized on a production basis by relating the amount of wastewater generated to the mass of the intermediate product which is produced by the process associated with the waste stream in question. These production normalizing parameters (PNP) are also listed in Table X-2.

The BAT wastewater discharge rate equals the BPT wastewater discharge rate for all waste streams except casting contact cooling water. This stream is discussed below.

The Agency proposed zero discharge of wastewater pollutants from kettle scrubbers and flow reduction over BPT levels for furnace scrubbers. As discussed in Section IX, data gathered through specific data requests have shown those plants thought to practice 100 percent recycle of kettle scrubber liquor actually have a periodic discharge. A wastewater discharge allowance is provided for kettle scrubbers at BPT. However, the proposed BPT discharge allowance has been changed for promulgation and is now based on 90 percent recycle. Further flow reduction is not demonstrated in the subcategory. The allowance is based on 90 percent recycle of scrubber liquor and is equal to the BPT discharge allowance.

CASTING CONTACT COOLING WATER

The BAT wastewater regulatory discharge allowance is 22 l/kkg (5.3 gal/ton), based on 90 percent recycle of the BPT discharge allowance. Ten of the 46 plants currently reporting casting

operations use contact cooling water. Two plants achieve zero discharge through 100 percent recycle or evaporation. Six plants are once-through dischargers with flow rates ranging from 5 to 963 l/kkg (1 to 231 gal/ton). Four of the eight plants reporting flow data meet the BAT discharge allowance.

REGULATED POLLUTANT PARAMETERS

In implementing the terms of the Consent Agreement in NRDC v. Train, Op. Cit., and 33 U.S.C. 1314(b)(2)(A and B) (1976), the Agency placed particular emphasis on the toxic pollutants. The raw wastewater concentrations from individual operations and the subcategory as a whole were examined to select certain pollutants and pollutant parameters for consideration for limitation. This examination and evaluation, presented in Section VI, concluded that 13 pollutants or pollutant parameters are present in secondary lead wastewaters at concentrations that can be effectively reduced by identified treatment technologies.

The high cost associated with analysis for toxic metal pollutants has prompted EPA to develop an alternative method for regulating and monitoring toxic pollutant discharges from the nonferrous metals manufacturing category. Rather than developing specific effluent mass limitations and standards for each of the toxic metals found in treatable concentrations in the raw wastewater from a given subcategory, the Agency is promulgating effluent mass limitations only for those pollutants generated in the greatest quantities as shown by the pollutant removal analysis. The pollutants selected for specific limitation are listed below:

114. antimony
115. arsenic
122. lead
128. zinc
ammonia (as N)

By establishing limitations and standards for certain toxic metal pollutants, dischargers will attain the same degree of control over toxic metal pollutants as they would have been required to achieve had all the toxic metal pollutants been directly limited.

This approach is justified technically since the treatment effectiveness concentrations used for lime precipitation and sedimentation technology are based on optimized treatment for concomitant multiple metals removal. Thus, even though metals have somewhat different theoretical solubilities, they will be removed at very nearly the same rate in a lime precipitation and sedimentation treatment system operated for multiple metals removal. Filtration as part of the technology basis is likewise justified because this technology removes metals non-preferentially.

The toxic metal pollutants selected for specific limitation in the secondary lead subcategory to control the discharges of toxic metal pollutants are antimony, arsenic, lead, and zinc. The

following toxic pollutants are excluded from limitation on the basis that they are effectively controlled by the limitations developed for the selected toxic metals:

118. cadmium
119. chromium (Total)
120. copper
124. nickel
126. silver
127. thallium

Effluent mass limitations are promulgated to eliminate the discharge of ammonia. Ammonia is used by some plants in the secondary lead subcategory as a wastewater treatment chemical. Monitoring and analysis for ammonia is not necessary if ammonia is not used. Plants must demonstrate to the permit and control authority that ammonia is not used in the plant as a process or wastewater treatment chemical.

EFFLUENT LIMITATIONS

The concentrations, achievable by application of the BAT technology (Option C) are summarized in Table VII-21 (page 248) of Vol. 1. These treatment effectiveness concentrations (both one day maximum and monthly average) are multiplied by the BAT normalized discharge flows summarized in Table X-2 to calculate the mass of pollutants allowed to be discharged per mass of product. The results of these calculations in milligrams of pollutant per kilogram of product represent the BAT effluent limitations for the secondary lead subcategory. The BAT effluent limitations are presented in Table X-3 (page 2003) for each waste stream.

Table X-1

POLLUTANT REMOVAL ESTIMATES FOR SECONDARY LEAD DIRECT DISCHARGERS

POLLUTANT	TOTAL RAW WASTE (kg/yr)	OPTION A DISCHARGED (kg/yr)	OPTION A REMOVED (kg/yr)	OPTION B DISCHARGED (kg/yr)	OPTION B REMOVED (kg/yr)	OPTION C DISCHARGED (kg/yr)	OPTION C REMOVED (kg/yr)
Arsenic	1,784.5	119.9	1,664.6	119.9	1,664.6	79.9	1,704.6
Antimony	3,572.7	164.6	3,408.1	164.6	3,408.1	110.5	3,462.2
Cadmium	169.9	18.6	151.3	18.6	151.3	11.5	158.4
Chromium	333.8	19.7	314.0	19.7	314.0	16.5	317.3
Lead	18,693.5	28.2	18,665.3	28.2	18,665.3	18.8	18,674.7
Nickel	578.1	174.0	404.1	174.0	404.1	51.7	526.3
Silver	40.2	23.5	16.7	23.5	16.7	16.5	23.7
Thallium	262.0	117.5	144.5	117.5	144.5	79.9	182.1
Copper	330.5	136.3	194.2	136.3	194.2	91.7	238.9
Zinc	468.4	77.6	390.8	77.6	390.8	54.1	414.3
TOTAL TOXIC METALS	26,233.6	879.9	25,353.7	879.9	25,353.7	531.0	25,702.6
Aluminum	8,753.7	526.6	8,227.2	526.6	8,227.2	350.3	8,403.5
Ammonia	494.9	0.0	494.9	0.0	494.9	0.0	494.9
Iron	9,759.5	96.4	9,663.2	96.4	9,663.2	65.8	9,693.7
TOTAL NONCONVENTIONALS	19,008.2	623.0	18,385.2	623.0	18,385.2	416.1	18,592.1
TSS	2,853,536.0	2,821.0	2,850,715.1	2,821.0	2,850,715.1	611.2	2,852,924.8
Oil & Grease	4,082.0	2,350.8	1,731.2	2,350.8	1,731.2	2,350.8	1,731.2
TOTAL CONVENTIONALS	2,857,618.0	5,171.8	2,852,446.3	5,171.8	2,852,446.3	2,962.0	2,854,656.0
TOTAL POLLUTANTS	2,902,859.8	6,674.6	2,896,185.2	6,674.6	2,896,185.2	3,909.1	2,898,950.7
FLOW (l/yr)	235,080,000		235,080,000		235,080,000		

NOTE: TOTAL TOXIC METALS = Arsenic + Antimony + Cadmium + Chromium + Lead + Nickel + Silver + Thallium + Copper + Zinc

TOTAL NONCONVENTIONALS = Aluminum + Ammonia + Iron

OPTION A = Lime Precipitation, Sedimentation, and Oil Skimming

OPTION B = Option A, plus In-process Flow Reduction

OPTION C = Option B, plus Multimedia Filtration

Table X-2

BAT WASTEWATER DISCHARGE RATES FOR THE SECONDARY LEAD SUBCATEGORY

Wastewater Stream	BAT Normalized Discharge Rate		Production Normalizing Parameter
	l/kkg	gal/ton	
Battery Cracking	673	161	kkg of lead scrap produced
Furnace Wet Air Pollution Control	2,610	626	kkg of lead produced from smelting
Kettle Wet Air Pollution Control	45	11	kkg of lead produced from kettle furnaces
Lead Paste Desulfurization	0	0	kkg of lead processed through desulfurization
Casting Contact Cooling Water	22	5.3	kkg of lead cast
Truck Wash	21	5	kkg of lead produced from smelting
Facility Washdown	0	0	kkg of lead produced from smelting
Battery Case Classification	0	0	kkg of lead scrap produced
Employee Hand Wash	27	6.5	kkg of lead produced from smelting
Employee Respirator Wash	44	10.5	kkg of lead produced from smelting
Laundering of Uniforms	128	30.7	kkg of lead produced from smelting

TABLE X-3

BAT EFFLUENT LIMITATIONS FOR THE SECONDARY LEAD SUBCATEGORY

(a) Battery Cracking BAT

Pollutant or Pollutant Property	Maximum for Any One Day	Maximum for Monthly Average
Metric Units - mg/kg of lead scrap produced English Units - lbs/million lbs of lead scrap produced		
*Antimony	1.299	0.579
*Arsenic	0.935	0.384
Cadmium	0.135	0.054
Chromium	0.249	0.101
Copper	0.861	0.411
*Lead	0.188	0.087
Nickel	1.370	0.249
Silver	0.195	0.081
Thallium	0.942	0.411
*Zinc	0.686	0.283
*Ammonia (as N)	0.000	0.000

(b) Blast, Reverberatory, or Rotary Furnace Wet Air Pollution Control BAT

Pollutant or Pollutant Property	Maximum for Any One Day	Maximum for Monthly Average
Metric Units - mg/kg of lead produced from smelting English Units - lbs/million lbs of lead produced from smelting		
*Antimony	5.037	2.245
*Arsenic	3.628	1.488
Cadmium	0.522	0.209
Chromium	0.966	0.392
Copper	3.341	1.592
*Lead	0.731	0.339
Nickel	1.436	0.966
Silver	0.757	0.313
Thallium	3.654	1.592
*Zinc	2.662	1.096
*Ammonia (as N)	0.000	0.000

*Regulated Pollutant

TABLE X-3 (Continued)

BAT EFFLUENT LIMITATIONS FOR THE SECONDARY LEAD SUBCATEGORY

(c) Kettle Wet Air Pollution Control BAT

Pollutant or Pollutant Property	Maximum for Any One Day	Maximum for Monthly Average
Metric Units - mg/kg of lead produced from refining English Units - lbs/million lbs of lead produced from refining		
*Antimony	0.087	0.039
*Arsenic	0.063	0.026
Cadmium	0.009	0.004
Chromium	0.017	0.007
Copper	0.058	0.027
*Lead	0.013	0.006
Nickel	0.025	0.017
Silver	0.013	0.005
Thallium	0.063	0.027
*Zinc	0.046	0.019
*Ammonia (as N)	0.000	0.000

(d) Lead Paste Desulfurization BAT

Pollutant or Pollutant Property	Maximum for Any One Day	Maximum for Monthly Average
Metric Units - mg/kg of lead produced through desulfurization English Units - lbs/million lbs of lead produced through desulfurization		
*Antimony	0.000	0.000
*Arsenic	0.000	0.000
Cadmium	0.000	0.000
Chromium	0.000	0.000
Copper	0.000	0.000
*Lead	0.000	0.000
Nickel	0.000	0.000
Silver	0.000	0.000
Thallium	0.000	0.000
*Zinc	0.000	0.000
*Ammonia (as N)	0.000	0.000

*Regulated Pollutant

TABLE X-3 (Continued)

BAT EFFLUENT LIMITATIONS FOR THE SECONDARY LEAD SUBCATEGORY

(e) Casting Contact Cooling BAT

Pollutant or Pollutant Property	Maximum for Any One Day	Maximum for Monthly Average
Metric Units - mg/kg of lead cast English Units - lbs/million lbs of lead cast		
*Antimony	0.042	0.019
*Arsenic	0.031	0.013
Cadmium	0.004	0.002
Chromium	0.008	0.003
Copper	0.028	0.013
*Lead	0.006	0.003
Nickel	0.012	0.008
Silver	0.006	0.003
Thallium	0.031	0.013
*Zinc	0.022	0.009
*Ammonia (as N)	0.000	0.000

(f) Truck Wash BAT

Pollutant or Pollutant Property	Maximum for Any One Day	Maximum for Monthly Average
Metric Units - mg/kg of lead produced from smelting English Units - lbs/million lbs of lead produced from smelting		
*Antimony	0.041	0.018
*Arsenic	0.029	0.012
Cadmium	0.004	0.002
Chromium	0.008	0.003
Copper	0.027	0.013
*Lead	0.006	0.003
Nickel	0.012	0.008
Silver	0.006	0.003
Thallium	0.029	0.013
*Zinc	0.021	0.009
*Ammonia (as N)	0.000	0.000

*Regulated Pollutant

TABLE X-3 (Continued)

BAT EFFLUENT LIMITATIONS FOR THE SECONDARY LEAD SUBCATEGORY

(g) Facility Washdown BAT

Pollutant or Pollutant Property	Maximum for Any One Day	Maximum for Monthly Average
Metric Units - mg/kg of lead produced from smelting English Units - lbs/million lbs of lead produced from smelting		
*Antimony	0.000	0.000
*Arsenic	0.000	0.000
Cadmium	0.000	0.000
Chromium	0.000	0.000
Copper	0.000	0.000
*Lead	0.000	0.000
Nickel	0.000	0.000
Silver	0.000	0.000
Thallium	0.000	0.000
*Zinc	0.000	0.000
*Ammonia (as N)	0.000	0.000

(h) Battery Case Classification BAT

Pollutant or Pollutant Property	Maximum for Any One Day	Maximum for Monthly Average
Metric Units - mg/kg of lead scrap produced English Units - lbs/million lbs of lead scrap produced		
*Antimony	0.000	0.000
*Arsenic	0.000	0.000
Cadmium	0.000	0.000
Chromium	0.000	0.000
Copper	0.000	0.000
*Lead	0.000	0.000
Nickel	0.000	0.000
Silver	0.000	0.000
Thallium	0.000	0.000
*Zinc	0.000	0.000
*Ammonia (as N)	0.000	0.000

*Regulated Pollutant

TABLE X-3 (Continued)

BAT EFFLUENT LIMITATIONS FOR THE SECONDARY LEAD SUBCATEGORY

(i) Employee Handwash BAT

Pollutant or Pollutant Property	Maximum for Any One Day	Maximum for Monthly Average
Metric Units - mg/kg of lead produced from smelting English Units - lbs/million lbs of lead produced from smelting		
*Antimony	0.052	0.023
*Arsenic	0.038	0.015
Cadmium	0.005	0.002
Chromium	0.010	0.004
Copper	0.035	0.016
*Lead	0.008	0.004
Nickel	0.015	0.010
Silver	0.008	0.003
Thallium	0.038	0.016
*Zinc	0.028	0.011
*Ammonia (as N)	0.000	0.000

*Regulated Pollutant

TABLE X-3 (Continued)

BAT EFFLUENT LIMITATIONS FOR THE SECONDARY LEAD SUBCATEGORY

(i) Employee Respirator Wash BAT

Pollutant or Pollutant Property	Maximum for Any One Day	Maximum for Monthly Average
Metric Units - mg/kg of lead produced from smelting English Units - lbs/million lbs of lead produced from smelting		
*Antimony	0.085	0.038
*Arsenic	0.061	0.025
Cadmium	0.009	0.004
Chromium	0.016	0.007
Copper	0.056	0.027
*Lead	0.012	0.006
Nickel	0.024	0.016
Silver	0.013	0.005
Thallium	0.062	0.027
*Zinc	0.045	0.018
*Ammonia (as N)	0.000	0.000

(j) Laundering Uniforms BAT

Pollutant or Pollutant Property	Maximum for Any One Day	Maximum for Monthly Average
Metric Units - mg/kg of lead produced from smelting English Units - lbs/million lbs of lead produced from smelting		
*Antimony	0.247	0.110
*Arsenic	0.178	0.073
Cadmium	0.026	0.010
Chromium	0.047	0.019
Copper	0.164	0.078
*Lead	0.036	0.017
Nickel	0.070	0.047
Silver	0.037	0.015
Thallium	0.179	0.078
*Zinc	0.131	0.054
*Ammonia (as N)	0.000	0.000

*Regulated Pollutant

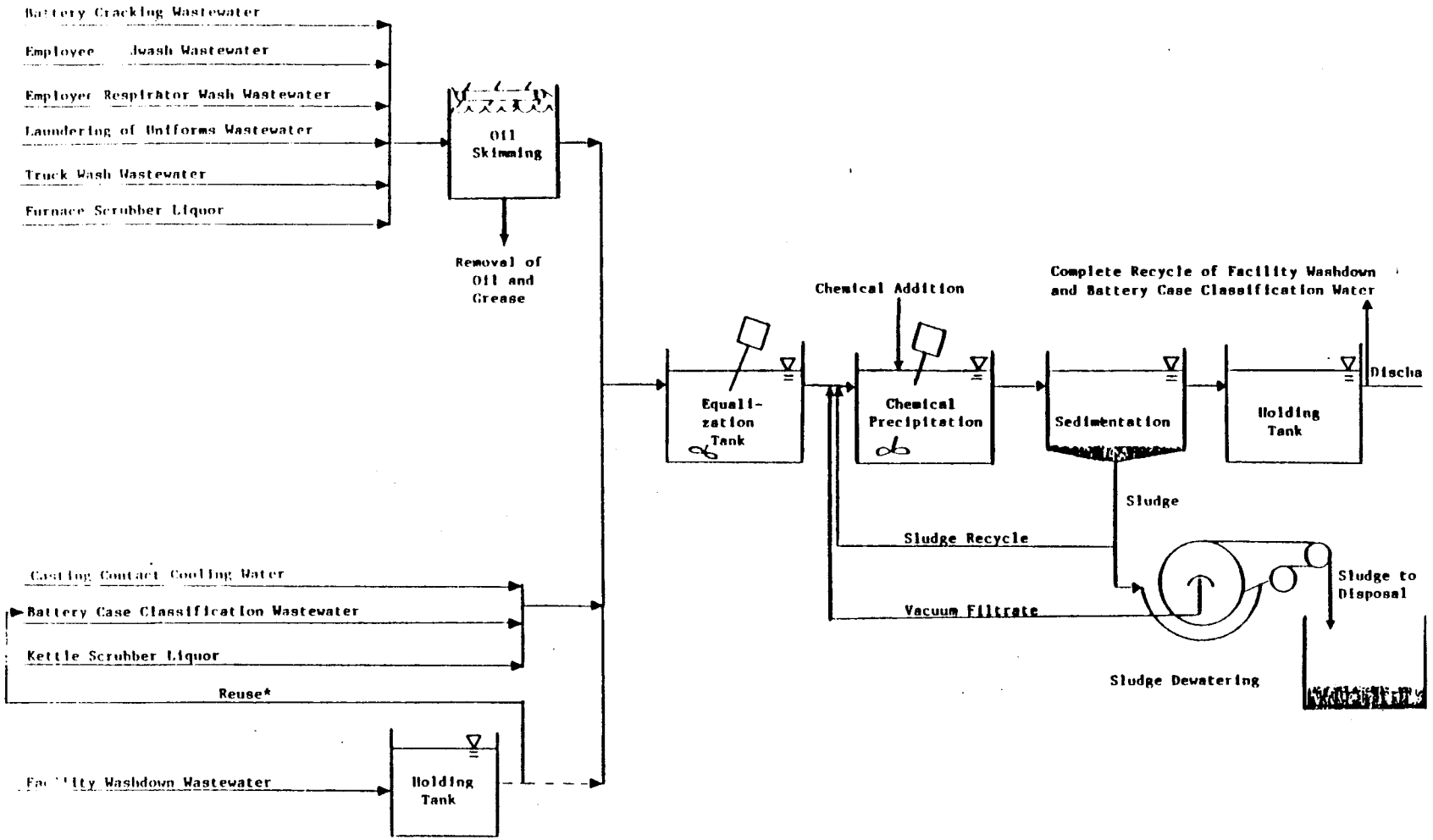

*Facility Washdown Wastewater is reused as Battery Case Classification makeup water. Any excess Facility Washdown Wastewater is sent to treatment.

Figure X-1

BAT TREATMENT SCHEME FOR OPTION A
SECONDARY LEAD SUBCATEGORY

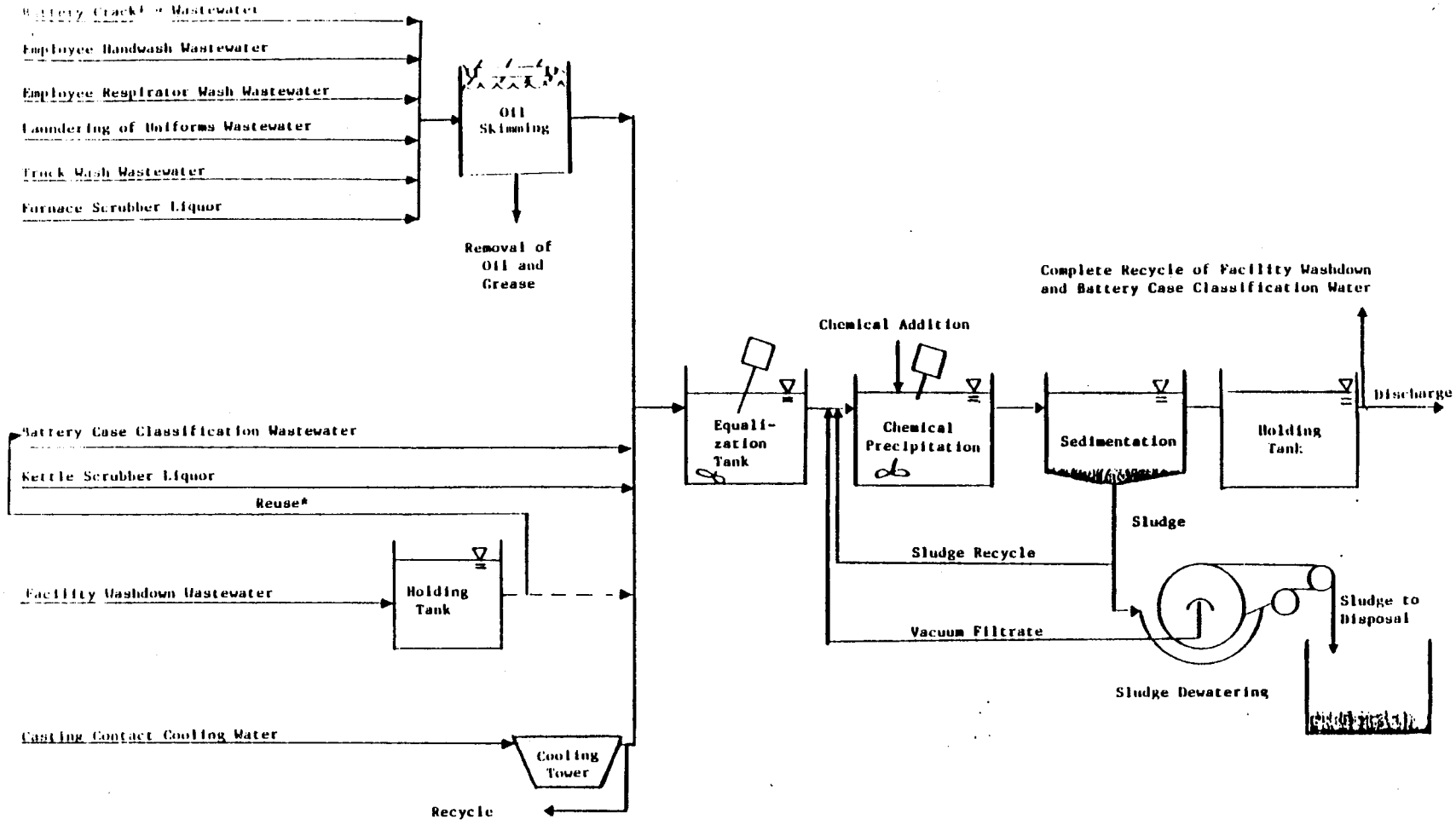

*Facility Washdown Wastewater is reused as Battery Case Classification makeup water. Any excess Facility Washdown Wastewater is sent to treatment.

Figure X-2

BAT TREATMENT SCHEME FOR OPTION B
SECONDARY LEAD SUBCATEGORY

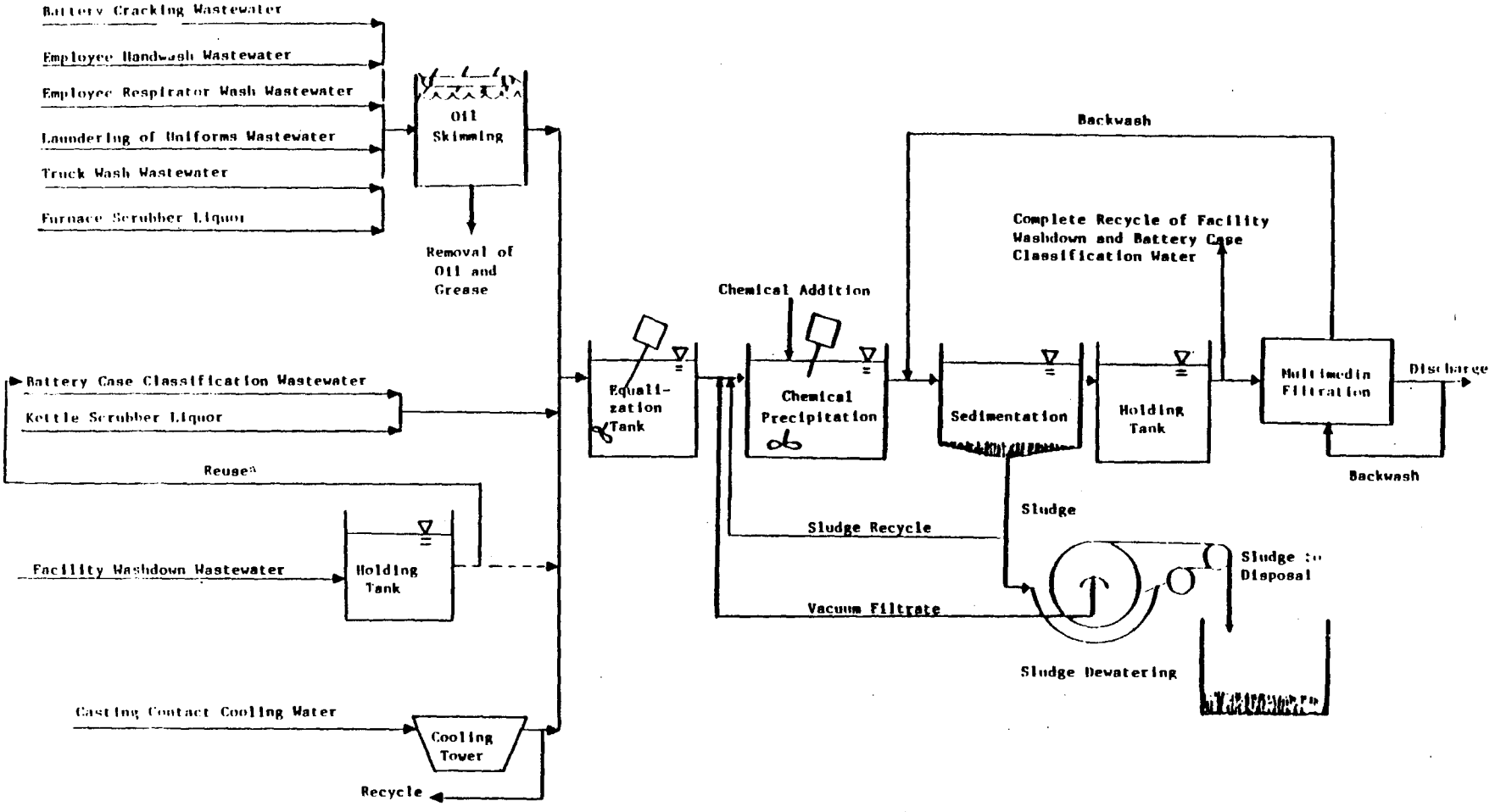

*Facility Washdown Wastewater is reused as Battery Case Classification makeup water. Any excess Facility Washdown Wastewater is sent to treatment.

Figure X-3

BAT TREATMENT SCHEME FOR OPTION C
SECONDARY LEAD SUBCATEGORY

Page Intentionally Blank

SECTION XI

NEW SOURCE PERFORMANCE STANDARDS

The basis for new source performance standards (NSPS) under Section 306 of the Act is the best available demonstrated technology (BDT). New plants have the opportunity to design the best and most efficient production processes and wastewater treatment technologies, without facing the added costs and restrictions encountered in retrofitting an existing plant. Therefore, Congress directed EPA to consider the best demonstrated process changes, in-plant controls, and end-of-pipe treatment technologies which reduce pollution to the maximum extent feasible.

This section describes the control technology for treatment of wastewater from new sources and presents mass discharge limitations of regulatory pollutants for NSPS in the secondary lead subcategory, based on the described control technology.

TECHNICAL APPROACH TO BDT

All of the treatment technology options applicable to a new source were previously considered for the BAT options. For this reason, three options were considered for BDT, which are all identical, with one exception, to the BAT options discussed in Section X. The kettle wet air pollution control discharge allowance is eliminated under BDT through use of dry air pollution control. Dry scrubbing is widely demonstrated for controlling emissions from kettle refining. Of the 28 plants with kettle air pollution control, 19 use dry scrubbing. The Agency also considered proposing dry scrubbing for controlling emissions from blast and reverberatory furnaces, but the nature of these emissions precludes the use of dry scrubbing. Exhaust gases from blast and reverberatory furnaces contain sulfur dioxide fumes, which require wet air pollution scrubbing.

The treatment technologies used for the three BDT options are:

OPTION A

- Preliminary treatment with oil skimming (where required),
- Chemical precipitation and sedimentation,
- Dry air pollution control of kettle refining, or alternately, complete recycle of kettle scrubber liquor, and
- Complete recycle of facility washdown and battery case classification wastewater after treatment.

OPTION B

- In-process flow reduction of casting contact cooling water,
- Preliminary treatment with oil skimming (where required),

- Chemical precipitation and sedimentation,
- Dry air pollution control of kettle refining, or alternately, complete recycle of kettle scrubber liquor, and
- Complete recycle of facility washdown and battery classification wastewater after treatment.

OPTION C

- In-process flow reduction of casting contact cooling water,
- Preliminary treatment with oil skimming (where required),
- Chemical precipitation and sedimentation,
- Dry air pollution control of kettle refining, or alternately, complete recycle of kettle scrubber liquor,
- Complete recycle of facility washdown and battery case classification wastewater after treatment, and
- Multimedia filtration.

Partial or complete reuse and recycle of wastewater is an essential part of each option. Reuse and recycle can precede or follow end-of-pipe treatment. A more detailed discussion of these treatment options is presented in Section X.

BDT OPTION SELECTION

EPA is promulgating NSPS for the secondary lead subcategory equal to the technology basis of BAT and is requiring additional flow reduction over BPT levels by using dry scrubbing to control emissions from kettle refining. Existing wet scrubbers are used to control emissions and prevent baghouse fires caused by sparking when sawdust and phosphorus are applied to the surface of the metal while in the kettle. Dry scrubbers can be used for this purpose if spark arrestors and settling chambers are installed to trap sparks. According to the Secondary Lead Smelters Association, this is a demonstrated and viable technology option. Dry scrubbing is not required at BAT because of the extensive retrofit costs of switching from wet to dry scrubbing.

The Agency recognizes that new sources have the opportunity to implement more advanced levels of treatment without incurring the costs of retrofit equipment, the costs of partial or complete shutdown necessary for installation of the new equipment, and the costs of startup and stabilization of the treatment system that existing plants would have. Specifically, the design of new plants can be based on recycle of contact cooling waters, recycle of air pollution control scrubber liquor, and use of dry air pollution equipment.

REGULATED POLLUTANT PARAMETERS

The Agency has no reason to believe that the pollutants that will be found in treatable concentrations in processes within new sources will be any different than with existing sources. Accordingly, pollutants and pollutant parameters selected for

limitation under NSPS, in accordance with the rationale of Sections VI and X, are identical to those selected for BAT. The conventional pollutant parameters TSS and pH are also selected for limitation.

NEW SOURCE PERFORMANCE STANDARDS

The NSPS discharge flows for each wastewater source are the same as the discharge rates for BAT except for kettle wet air pollution control and are presented in Table XI-1 (page 2016). The mass of pollutant allowed to be discharged per mass of product is calculated by multiplying the appropriate treatment effectiveness concentration by the production normalized wastewater discharge flows (l/kkg). These concentrations are listed in Table VII-21 (page 248) of Vol. I. New source performance standards are presented in Table XI-2 (page 2017).

Table XI-1

NSPS WASTEWATER DISCHARGE RATES FOR THE SECONDARY LEAD SUBCATEGORY

Wastewater Stream	NSPS Normalized Discharge Rate		Production Normalizing Parameter
	l/kkg	gal/ton	
Battery Cracking	673	161	kkg of lead scrap produced
Furnace Wet Air Pollution Control	2,610	626	kkg of lead produced from smelting
Kettle Wet Air Pollution Control	0	0	kkg of lead produced from kettle furnaces
Lead Paste Desulfurization	0	0	kkg of lead processed through desulfurization
Casting Contact Cooling Water	22	5.3	kkg of lead cast
Truck Wash	21	5	kkg of lead produced from smelting
Facility Washdown	0	0	kkg of lead produced from smelting
Battery Case Classification	0	0	kkg of lead scrap produced
Employee Hand Wash	27	6.5	kkg of lead produced from smelting
Employee Respirator Wash	44	10.5	kkg of lead produced from smelting
Laundering of Uniforms	128	30.7	kkg of lead produced from smelting

TABLE XI-2

NSPS FOR THE SECONDARY LEAD SUBCATEGORY

(a) Battery Cracking NSPS

Pollutant or Pollutant Property	Maximum for Any One Day	Maximum for Monthly Average
Metric Units - mg/kg of lead scrap produced English Units - lbs/million lbs of lead scrap produced		
*Antimony	1.299	0.579
*Arsenic	0.935	0.384
Cadmium	0.135	0.054
Chromium	0.249	0.101
Copper	0.861	0.411
*Lead	0.188	0.087
Nickel	1.370	0.249
Silver	0.195	0.081
Thallium	0.942	0.411
*Zinc	0.686	0.283
*Ammonia (as N)	0.000	0.000
*TSS	10.100	8.076
*pH	Within the range 7.5 to 10.0 at all times	

(b) Blast, Reverberatory, or Rotary Furnace Wet Air Pollution Control NSPS

Pollutant or Pollutant Property	Maximum for Any One Day	Maximum for Monthly Average
Metric Units - mg/kg of lead produced from smelting English Units - lbs/million lbs of lead produced from smelting		
*Antimony	5.037	2.245
*Arsenic	3.628	1.488
Cadmium	0.522	0.209
Chromium	0.966	0.392
Copper	3.341	1.592
*Lead	0.731	0.339
Nickel	1.436	0.966
Silver	0.757	0.313
Thallium	3.654	1.592
*Zinc	2.662	1.096
*Ammonia (as N)	0.000	0.000
*TSS	39.150	31.320
*pH	Within the range 7.5 to 10.0 at all times	

*Regulated Pollutant

TABLE XI-2 (Continued)

NSPS FOR THE SECONDARY LEAD SUBCATEGORY

(c) Kettle Wet Air Pollution Control NSPS

Pollutant or Pollutant Property	Maximum for Any One Day	Maximum for Monthly Average
Metric Units - mg/kg of lead produced from refining English Units - lbs/million lbs of lead produced from refining		
*Antimony	0.000	0.000
*Arsenic	0.000	0.000
Cadmium	0.000	0.000
Chromium	0.000	0.000
Copper	0.000	0.000
*Lead	0.000	0.000
Nickel	0.000	0.000
Silver	0.000	0.000
Thallium	0.000	0.000
*Zinc	0.000	0.000
*Ammonia (as N)	0.000	0.000
*TSS	0.000	0.000
*pH	Within the range 7.5 to 10.0 at all times	

(d) Lead Paste Desulfurization NSPS

Pollutant or Pollutant Property	Maximum for Any One Day	Maximum for Monthly Average
Metric Units - mg/kg of lead produced through desulfurization English Units - lbs/million lbs of lead produced through desulfurization		
*Antimony	0.000	0.000
*Arsenic	0.000	0.000
Cadmium	0.000	0.000
Chromium	0.000	0.000
Copper	0.000	0.000
*Lead	0.000	0.000
Nickel	0.000	0.000
Silver	0.000	0.000
Thallium	0.000	0.000
*Zinc	0.000	0.000
*Ammonia (as N)	0.000	0.000
*TSS	0.000	0.000
*pH	Within the range 7.5 to 10.0 at all times	

*Regulated Pollutant

TABLE XI-2 (Continued)

NSPS FOR THE SECONDARY LEAD SUBCATEGORY

(e) Casting Contact Cooling NSPS

Pollutant or Pollutant Property	Maximum for Any One Day	Maximum for Monthly Average
Metric Units - mg/kg of lead cast English Units - lbs/million lbs of lead cast		
*Antimony	0.042	0.019
*Arsenic	0.031	0.013
Cadmium	0.004	0.002
Chromium	0.008	0.003
Copper	0.028	0.013
*Lead	0.006	0.003
Nickel	0.012	0.008
Silver	0.006	0.003
Thallium	0.031	0.013
*Zinc	0.022	0.009
*Ammonia (as N)	0.000	0.000
*TSS	0.330	0.264
*pH	Within the range 7.5 to 10.0 at all times	

(f) Truck Wash NSPS

Pollutant or Pollutant Property	Maximum for Any One Day	Maximum for Monthly Average
Metric Units - mg/kg of lead produced from smelting English Units - lbs/million lbs of lead produced from smelting		
*Antimony	0.041	0.018
*Arsenic	0.029	0.012
Cadmium	0.004	0.002
Chromium	0.008	0.003
Copper	0.027	0.013
*Lead	0.006	0.003
Nickel	0.012	0.008
Silver	0.006	0.003
Thallium	0.029	0.013
*Zinc	0.021	0.009
*Ammonia (as N)	0.000	0.000
*TSS	0.315	0.252
*pH	Within the range 7.5 to 10.0 at all times	

*Regulated Pollutant

TABLE XI-2 (Continued)

NSPS FOR THE SECONDARY LEAD SUBCATEGORY

(g) Facility Washdown NSPS

Pollutant or Pollutant Property	Maximum for Any One Day	Maximum for Monthly Average
Metric Units - mg/kg of lead produced from smelting English Units - lbs/million lbs of lead produced from smelting		
*Antimony	0.000	0.000
*Arsenic	0.000	0.000
Cadmium	0.000	0.000
Chromium	0.000	0.000
Copper	0.000	0.000
*Lead	0.000	0.000
Nickel	0.000	0.000
Silver	0.000	0.000
Thallium	0.000	0.000
*Zinc	0.000	0.000
*Ammonia (as N)	0.000	0.000
*TSS	0.000	0.000
*pH	Within the range 7.5 to 10.0 at all times	

(h) Battery Case Classification NSPS

Pollutant or Pollutant Property	Maximum for Any One Day	Maximum for Monthly Average
Metric Units - mg/kg of lead scrap produced English Units - lbs/million lbs of lead scrap produced		
*Antimony	0.000	0.000
*Arsenic	0.000	0.000
Cadmium	0.000	0.000
Chromium	0.000	0.000
Copper	0.000	0.000
*Lead	0.000	0.000
Nickel	0.000	0.000
Silver	0.000	0.000
Thallium	0.000	0.000
*Zinc	0.000	0.000
*Ammonia (as N)	0.000	0.000
*TSS	0.000	0.000
*pH	Within the range 7.5 to 10.0 at all times	

*Regulated Pollutant

TABLE XI-2 (Continued)

NSPS FOR THE SECONDARY LEAD SUBCATEGORY

(i) Employee Handwash NSPS

Pollutant or Pollutant Property	Maximum for Any One Day	Maximum for Monthly Average
Metric Units - mg/kg of lead produced from smelting English Units - lbs/million lbs of lead produced from smelting		
*Antimony	0.052	0.023
*Arsenic	0.038	0.015
Cadmium	0.005	0.002
Chromium	0.010	0.004
Copper	0.035	0.016
*Lead	0.008	0.004
Nickel	0.015	0.010
Silver	0.008	0.003
Thallium	0.038	0.016
*Zinc	0.028	0.011
*Ammonia (as N)	0.000	0.000
*TSS	0.405	0.324
*pH	Within the range 7.5 to 10.0 at all times	

(i) Employee Respirator Wash NSPS

Pollutant or Pollutant Property	Maximum for Any One Day	Maximum for Monthly Average
Metric Units - mg/kg of lead produced from smelting English Units - lbs/million lbs of lead produced from smelting		
*Antimony	0.085	0.038
*Arsenic	0.061	0.025
Cadmium	0.009	0.004
Chromium	0.016	0.007
Copper	0.056	0.027
*Lead	0.012	0.006
Nickel	0.024	0.016
Silver	0.013	0.005
Thallium	0.062	0.027
*Zinc	0.045	0.018
*Ammonia (as N)	0.000	0.000
*TSS	0.660	0.528
*pH	Within the range 7.5 to 10.0 at all times	

*Regulated Pollutant

TABLE XI-2 (Continued)

NSPS FOR THE SECONDARY LEAD SUBCATEGORY

(j) Laundering Uniforms NSPS

Pollutant or Pollutant Property	Maximum for Any One Day	Maximum for Monthly Average
Metric Units - mg/kg of lead produced from smelting English Units - lbs/million lbs of lead produced from smelting		
*Antimony	0.247	0.110
*Arsenic	0.178	0.073
Cadmium	0.026	0.010
Chromium	0.047	0.019
Copper	0.164	0.078
*Lead	0.036	0.017
Nickel	0.070	0.047
Silver	0.037	0.015
Thallium	0.179	0.078
*Zinc	0.131	0.054
*Ammonia (as N)	0.000	0.000
*TSS	1.920	1.536
*pH	Within the range 7.5 to 10.0 at all times	

* Regulated Pollutant

SECTION XII

PRETREATMENT STANDARDS

PSES are designed to prevent the discharge of pollutants which pass through, interfere with, or are otherwise incompatible with the operation of publicly owned treatment works (POTW). The Clean Water Act of 1977 requires pretreatment for pollutants, such as toxic metals, that limit POTW sludge management alternatives. Section 307(c) of the Act requires EPA to promulgate pretreatment standards for new sources (PSNS) at the same time that it promulgates NSPS. New indirect discharge facilities, like new direct discharge facilities, have the opportunity to incorporate the best available demonstrated technologies, including process changes, in-plant controls, and end-of-pipe treatment technologies, and to use plant site selection to ensure adequate treatment system installation. Pretreatment standards are to be technology based, analogous to the best available technology for removal of toxic pollutants.

This section describes the control and treatment technologies for pretreatment of process wastewaters from existing sources and new sources in the secondary lead subcategory. Pretreatment standards for regulated pollutants are presented based on the selected control and treatment technologies.

TECHNICAL APPROACH TO PRETREATMENT

Before promulgating pretreatment standards, the Agency examines whether the pollutants discharged by the industry pass through the POTW or interfere with the POTW operation or its chosen sludge disposal practices. In determining whether pollutants pass through a well-operated POTW achieving secondary treatment, the Agency compares the percentage of a pollutant removed by POTW with the percentage removed by direct dischargers applying the best available technology economically achievable. A pollutant is deemed to pass through the POTW when the average percentage removed nationwide by well-operated POTW meeting secondary treatment requirements, is less than the percentage removed by direct dischargers complying with BAT effluent limitations for that pollutant.

This definition of pass through satisfies two competing objectives set by Congress: (1) that standards for indirect dischargers be equivalent to standards for direct dischargers, while at the same time, (2) that the treatment capability and performance of the POTW be recognized and taken into account in regulating the discharge of pollutants from indirect dischargers. The Agency compares percentage removal rather than the mass or concentration of pollutants discharged because the latter would not take into account the mass of pollutants discharged to the POTW from non-industrial sources nor the dilution of the pollutants in the POTW effluent to lower concentrations due to

the addition of large amounts of non-industrial wastewater.

PRETREATMENT STANDARDS FOR EXISTING AND NEW SOURCES

The treatment technology options for PSES and PSNS are the same as the BAT Options discussed in Section X. For promulgation PSNS requires that the kettle furnace air scrubbing waste stream be eliminated through the use of dry air pollution control. A more detailed discussion, including pollutants controlled by each treatment process and achievable treatment concentration for each option, is presented in Section VII of Vol. 1.

Treatment technologies considered for PSES:

OPTION A

- Chemical precipitation and sedimentation,
- Complete recycle of facility washdown and battery case classification wastewater after treatment.

OPTION B

- In-process flow reduction of casting contact cooling water,
- Chemical precipitation and sedimentation,
- Complete recycle of facility washdown and battery case classification wastewater after treatment.

OPTION C

- In-process flow reduction of casting contact cooling water,
- Chemical precipitation and sedimentation,
- Complete recycle of facility washdown and battery case classification wastewater after treatment, and
- Multimedia filtration.

COST AND POLLUTANT REMOVAL ESTIMATES

The cost and pollutant removal estimates of each treatment option were used to determine the most cost-effective option. The methodology applied in calculating pollutant removal estimates and plant compliance costs is discussed in Section X. Table XII-1 (page 2027) shows the estimated pollutant removals for indirect dischargers. Compliance costs are presented in Table VIII-2 (page 1973).

PSES OPTION SELECTION

EPA has selected Option C as the basis for PSES for the secondary lead subcategory. This technology is equivalent to the promulgated BAT. The Option C treatment consists of in-process flow reduction, chemical precipitation, sedimentation, and multimedia filtration. This selection follows the rationale used in the selection of BAT. This option prevents pass-through and equals promulgated BAT.

Implementation of the promulgated PSES limitations would remove annually an estimated 15,531 kg of toxic pollutants over estimated current discharge. Removals based on estimated raw discharge are approximately 46,500 kg of toxic pollutants. The final PSES effluent mass limitations will remove 620 kg/yr of toxic metals over the intermediate PSES option considered, which lacks filtration. Both options are economically achievable. The Agency believes the incremental removal justifies selection of filtration as part of PSES model technology. Filtration is currently demonstrated by five indirect discharging secondary lead plants. The estimated capital cost for achieving promulgated PSES is $4.26 million (March, 1982 dollars), and the estimated annual cost is $2.51 million.

PSNS OPTION SELECTION

The technology basis for promulgated PSNS is identical to NSPS. The PSNS treatment consists of in-process flow reduction, chemical precipitation, sedimentation, and multimedia filtration. The Agency recognizes that new sources have the opportunity to implement more advanced levels of treatment without incurring the costs of retrofitting and the costs of partial or complete shutdown necessary for installation of the new equipment that existing plants should have.

Promulgated PSNS prevents pass through and equals promulgated NSPS. The PSNS flow allowances are based on minimization of process wastewater wherever possible through use of cooling towers to recycling casting contact cooling water. Complete recycle of treated facility washdown and battery case classification wastewater is also included. Dry scrubbing is required for kettle air pollution control for the reasons provided in NSPS.

REGULATED POLLUTANT PARAMETERS

Pollutants and pollutant parameters selected for limitation in accordance with the rationale of Sections VI and X, are identical to those selected for limitation for BAT. EPA is promulgating PSES and PSNS for ammonia, antimony, arsenic, lead, and zinc to prevent pass-through. The conventional pollutants are not limited under PSES and PSNS because they are effectively controlled by POTW.

PRETREATMENT STANDARDS

The PSES and PSNS discharge flows are identical to the BAT discharge flows for all processes except PSNS for kettle air pollution control. These discharge flows are listed in Tables XII-2 and XII-3 (pages 2027 and 2028). The mass of pollutant allowed to be discharged per mass of product is calculated by multiplying the achievable treatment concentration (mg/l) by the normalized wastewater discharge flow (l/kkg). The achievable treatment concentrations are presented in Table VII-21 of Vol. I (page 248). Pretreatment standards for existing and new sources, as determined from the above procedure, are shown in Tables XII-4 and XII-5 (pages 2030 and 2036) for each waste stream.

Table XII-1

POLLUTANT REMOVAL ESTIMATES FOR SECONDARY LEAD INDIRECT DISCHARGERS

POLLUTANT	TOTAL RAW WASTE (kg/yr)	OPTION A DISCHARGED (kg/yr)	OPTION A REMOVED (kg/yr)	OPTION B DISCHARGED (kg/yr)	OPTION B REMOVED (kg/yr)	OPTION C DISCHARGED (kg/yr)	OPTION C REMOVED (kg/yr)
Arsenic	3,867.6	225.2	3,642.4	222.8	3,644.8	148.5	3,719.1
Antimony	6,907.1	309.1	6,598.0	305.8	6,601.3	205.3	6,701.8
Cadmium	338.4	34.9	303.5	34.5	303.9	21.4	317.0
Chromium	537.9	37.1	500.8	36.7	501.2	30.6	507.3
Lead	33,495.4	53.0	33,442.4	52.4	33,442.9	35.0	33,460.4
Nickel	523.7	326.8	196.9	323.3	200.4	96.1	427.6
Silver	44.0	44.0	0.0	43.7	0.3	30.6	13.4
Thallium	190.2	190.2	0.0	190.2	0.0	148.5	41.6
Copper	666.0	256.1	409.8	253.4	412.6	170.4	495.6
Zinc	916.8	145.7	771.1	144.2	772.6	100.5	816.3
TOTAL TOXIC METALS	47,487.0	1,622.1	45,864.9	1,607.0	45,880.0	987.0	46,500.1
Aluminum	19,652.6	989.2	18,663.4	978.7	18,674.0	651.0	19,001.6
Ammonia	1,527.2	0.0	1,527.2	0.0	1,527.2	0.0	1,527.2
Iron	21,902.6	181.1	21,721.5	179.1	21,723.4	122.3	21,780.2
TOTAL NONCONVENTIONALS	43,082.4	1,170.2	41,912.2	1,157.8	41,924.6	773.3	42,309.1
TSS	1,278,058.9	5,299.2	1,272,759.7	5,242.8	1,272,816.1	1,135.9	1,276,922.9
Oil & Grease	3,693.4	3,693.4	0.0	3,693.4	0.0	3,693.4	0.0
TOTAL CONVENTIONALS	1,281,752.2	8,992.6	1,272,759.7	8,936.2	1,272,816.1	4,829.3	1,276,922.9
TOTAL POLLUTANTS	1,372,321.7	11,784.9	1,360,536.8	11,701.0	1,360,620.7	6,589.6	1,365,732.1
FLOW (l/yr)	441,600,000		36,900,000		36,900,000		

NOTE: TOTAL TOXIC METALS = Arsenic + Antimony + Cadmium + Chromium + Lead + Nickel + Silver + Thallium + Copper + Zinc

TOTAL NONCONVENTIONALS = Aluminum + Ammonia + Iron

TOTAL CONVENTIONALS = TSS + Oil & Grease

OPTION A = Lime Precipitation and Sedimentation

OPTION B = Option A, plus In-process Flow Reduction

OPTION C = Option B, plus Multimedia Filtration

Table XII-2

PSES WASTEWATER DISCHARGE RATES FOR THE SECONDARY LEAD SUBCATEGORY

Wastewater Stream	PSES Normalized Discharge Rate		Production Normalizing Parameter
	l/kkg	gal/ton	
Battery Cracking	673	161	kkg of lead scrap produced
Furnace Wet Air Pollution Control	2,610	626	kkg of lead produced from smelting
Kettle Wet Air Pollution Control	45	11	kkg of lead produced from kettle furnaces
Lead Paste Desulfurization	0	0	kkg of lead processed through desulfurization
Casting Contact Cooling Water	22	5.3	kkg of lead cast
Truck Wash	21	5	kkg of lead produced from smelting
Facility Washdown	0	0	kkg of lead produced from smelting
Battery Case Classification	0	0	kkg of lead scrap produced
Employee Hand Wash	27	6.5	kkg of lead produced from smelting
Employee Respirator Wash	44	10.5	kkg of lead produced from smelting
Laundering of Uniforms	128	30.7	kkg of lead produced from smelting

Table XII-3

PSNS WASTEWATER DISCHARGE RATES FOR THE SECONDARY LEAD SUBCATEGORY

Wastewater Stream	PSNS Normalized Discharge Rate		Production Normalizing Parameter
	l/kkg	gal/ton	
Battery Cracking	673	161	kkg of lead scrap produced
Furnace Wet Air Pollution Control	2,610	626	kkg of lead produced from smelting
Kettle Wet Air Pollution Control	0	0	kkg of lead produced from kettle furnaces
Lead Paste Desulfurization	0	0	kkg of lead processed through desulfurization
Casting Contact Cooling Water	22	5.3	kkg of lead cast
Truck Wash	21	5	kkg of lead produced from smelting
Facility Washdown	0	0	kkg of lead produced from smelting
Battery Case Classification	0	0	kkg of lead scrap produced
Employee Hand Wash	27	6.5	kkg of lead produced from smelting
Employee Respirator Wash	44	10.5	kkg of lead produced from smelting
Laundering of Uniforms	128	30.7	kkg of lead produced from smelting

TABLE XII-4

PSES FOR THE SECONDARY LEAD SUBCATEGORY

(a) Battery Cracking PSES.

Pollutant or Pollutant Property	Maximum for Any One Day	Maximum for Monthly Average
Metric Units - mg/kg of lead scrap produced English Units - lbs/million lbs of lead scrap produced		
*Antimony	1.299	0.579
*Arsenic	0.935	0.384
Cadmium	0.135	0.054
Chromium	0.249	0.101
Copper	0.861	0.411
*Lead	0.188	0.087
Nickel	1.370	0.249
Silver	0.195	0.081
Thallium	0.942	0.411
*Zinc	0.686	0.283
*Ammonia (as N)	0.000	0.000

(b) Blast, Reverberatory, or Rotary Furnace Wet Air Pollution Control PSES

Pollutant or Pollutant Property	Maximum for Any One Day	Maximum for Monthly Average
Metric Units - mg/kg of lead produced from smelting English Units - lbs/million lbs of lead produced from smelting		
*Antimony	5.037	2.245
*Arsenic	3.628	1.488
Cadmium	0.522	0.209
Chromium	0.966	0.392
Copper	3.341	1.592
*Lead	0.731	0.339
Nickel	1.436	0.966
Silver	0.757	0.313
Thallium	3.654	1.592
*Zinc	2.662	1.096
*Ammonia (as N)	0.000	0.000

*Regulated Pollutant

TABLE XII-4 (Continued)

PSES FOR THE SECONDARY LEAD SUBCATEGORY

(c) Kettle Wet Air Pollution Control PSES

Pollutant or Pollutant Property	Maximum for Any One Day	Maximum for Monthly Average
Metric Units - mg/kg of lead produced from refining English Units - lbs/million lbs of lead produced from refining		
*Antimony	0.087	0.039
*Arsenic	0.063	0.026
Cadmium	0.009	0.004
Chromium	0.017	0.007
Copper	0.058	0.027
*Lead	0.013	0.006
Nickel	0.025	0.017
Silver	0.013	0.005
Thallium	0.063	0.027
*Zinc	0.046	0.019
*Ammonia (as N)	0.000	0.000

(d) Lead Paste Desulfurization PSES

Pollutant or Pollutant Property	Maximum for Any One Day	Maximum for Monthly Average
Metric Units - mg/kg of lead produced through desulfurization English Units - lbs/million lbs of lead produced through desulfurization		
*Antimony	0.000	0.000
*Arsenic	0.000	0.000
Cadmium	0.000	0.000
Chromium	0.000	0.000
Copper	0.000	0.000
*Lead	0.000	0.000
Nickel	0.000	0.000
Silver	0.000	0.000
Thallium	0.000	0.000
*Zinc	0.000	0.000
*Ammonia (as N)	0.000	0.000

*Regulated Pollutant

TABLE XII-4 (Continued)

PSES FOR THE SECONDARY LEAD SUBCATEGORY

(e) Casting Contact Cooling PSES

Pollutant or Pollutant Property	Maximum for Any One Day	Maximum for Monthly Average
Metric Units - mg/kg of lead cast English Units - lbs/million lbs of lead cast		
*Antimony	0.042	0.019
*Arsenic	0.031	0.013
Cadmium	0.004	0.002
Chromium	0.008	0.003
Copper	0.028	0.013
*Lead	0.006	0.003
Nickel	0.012	0.008
Silver	0.006	0.003
Thallium	0.031	0.013
*Zinc	0.022	0.009
*Ammonia (as N)	0.000	0.000

(f) Truck Wash PSES

Pollutant or Pollutant Property	Maximum for Any One Day	Maximum for Monthly Average
Metric Units - mg/kg of lead produced from smelting English Units - lbs/million lbs of lead produced from smelting		
*Antimony	0.041	0.018
*Arsenic	0.029	0.012
Cadmium	0.004	0.002
Chromium	0.008	0.003
Copper	0.027	0.013
*Lead	0.006	0.003
Nickel	0.012	0.008
Silver	0.006	0.003
Thallium	0.029	0.013
*Zinc	0.021	0.009
*Ammonia (as N)	0.000	0.000

*Regulated Pollutant

TABLE XII-4 (Continued)

PSES FOR THE SECONDARY LEAD SUBCATEGORY

(g) Facility Washdown PSES

Pollutant or Pollutant Property	Maximum for Any One Day	Maximum for Monthly Average
Metric Units - mg/kg of lead produced from smelting English Units - lbs/million lbs of lead produced from smelting		
*Antimony	0.000	0.000
*Arsenic	0.000	0.000
Cadmium	0.000	0.000
Chromium	0.000	0.000
Copper	0.000	0.000
*Lead	0.000	0.000
Nickel	0.000	0.000
Silver	0.000	0.000
Thallium	0.000	0.000
*Zinc	0.000	0.000
*Ammonia (as N)	0.000	0.000

(h) Battery Case Classification PSES

Pollutant or Pollutant Property	Maximum for Any One Day	Maximum for Monthly Average
Metric Units - mg/kg of lead scrap produced English Units - lbs/million lbs of lead scrap produced		
*Antimony	0.000	0.000
*Arsenic	0.000	0.000
Cadmium	0.000	0.000
Chromium	0.000	0.000
Copper	0.000	0.000
*Lead	0.000	0.000
Nickel	0.000	0.000
Silver	0.000	0.000
Thallium	0.000	0.000
*Zinc	0.000	0.000
*Ammonia (as N)	0.000	0.000

*Regulated Pollutant

TABLE XII-4 (Continued)

PSES FOR THE SECONDARY LEAD SUBCATEGORY

(i) Employee Handwash PSES

Pollutant or Pollutant Property	Maximum for Any One Day	Maximum for Monthly Average
Metric Units - mg/kg of lead produced from smelting English Units - lbs/million lbs of lead produced from smelting		
*Antimony	0.052	0.023
*Arsenic	0.038	0.015
Cadmium	0.005	0.002
Chromium	0.010	0.004
Copper	0.035	0.016
*Lead	0.008	0.004
Nickel	0.015	0.010
Silver	0.008	0.003
Thallium	0.038	0.016
*Zinc	0.028	0.011
*Ammonia (as N)	0.000	0.000

(i) Employee Respirator Wash PSES

Pollutant or Pollutant Property	Maximum for Any One Day	Maximum for Monthly Average
Metric Units - mg/kg of lead produced from smelting English Units - lbs/million lbs of lead produced from smelting		
*Antimony	0.085	0.038
*Arsenic	0.061	0.025
Cadmium	0.009	0.004
Chromium	0.016	0.007
Copper	0.056	0.027
*Lead	0.012	0.006
Nickel	0.024	0.016
Silver	0.013	0.005
Thallium	0.062	0.027
*Zinc	0.045	0.018
*Ammonia (as N)	0.000	0.000

*Regulated Pollutant

TABLE XII-4 (Continued)

PSES FOR THE SECONDARY LEAD SUBCATEGORY

(j) Laundering Uniforms PSES

Pollutant or Pollutant Property	Maximum for Any One Day	Maximum for Monthly Average
Metric Units - mg/kg of lead produced from smelting English Units - lbs/million lbs of lead produced from smelting		
*Antimony	0.247	0.110
*Arsenic	0.178	0.073
Cadmium	0.026	0.010
Chromium	0.047	0.019
Copper	0.164	0.078
*Lead	0.036	0.017
Nickel	0.070	0.047
Silver	0.037	0.015
Thallium	0.179	0.078
*Zinc	0.131	0.054
*Ammonia (as N)	0.000	0.000

* Regulated Pollutant

TABLE XII-5

PSNS FOR THE SECONDARY LEAD SUBCATEGORY

(a) Battery Cracking PSNS

Pollutant or Pollutant Property	Maximum for Any One Day	Maximum for Monthly Average
Metric Units - mg/kg of lead scrap produced English Units - lbs/million lbs of lead scrap produced		
*Antimony	1.299	0.579
*Arsenic	0.935	0.384
Cadmium	0.135	0.054
Chromium	0.249	0.101
Copper	0.861	0.411
*Lead	0.188	0.087
Nickel	1.370	0.249
Silver	0.195	0.081
Thallium	0.942	0.411
*Zinc	0.686	0.283
*Ammonia (as N)	0.000	0.000

(b) Blast, Reverberatory, or Rotary Furnace Wet Air Pollution Control PSNS

Pollutant or Pollutant Property	Maximum for Any One Day	Maximum for Monthly Average
Metric Units - mg/kg of lead produced from smelting English Units - lbs/million lbs of lead produced from smelting		
*Antimony	5.037	2.245
*Arsenic	3.628	1.488
Cadmium	0.522	0.209
Chromium	0.966	0.392
Copper	3.341	1.592
*Lead	0.731	0.339
Nickel	1.436	0.966
Silver	0.757	0.313
Thallium	3.654	1.592
*Zinc	2.662	1.096
*Ammonia (as N)	0.000	0.000

*Regulated Pollutant

TABLE XII-5 (Continued)

PSNS FOR THE SECONDARY LEAD SUBCATEGORY

(c) Kettle Wet Air Pollution Control PSNS

Pollutant or Pollutant Property	Maximum for Any One Day	Maximum for Monthly Average
Metric Units - mg/kg of lead produced from refining English Units - lbs/million lbs of lead produced from refining		
*Antimony	0.000	0.000
*Arsenic	0.000	0.000
Cadmium	0.000	0.000
Chromium	0.000	0.000
Copper	0.000	0.000
*Lead	0.000	0.000
Nickel	0.000	0.000
Silver	0.000	0.000
Thallium	0.000	0.000
*Zinc	0.000	0.000
*Ammonia (as N)	0.000	0.000

(d) Lead Paste Desulfurization PSNS

Pollutant or Pollutant Property	Maximum for Any One Day	Maximum for Monthly Average
Metric Units - mg/kg of lead produced through desulfurization English Units - lbs/million lbs of lead produced through desulfurization		
*Antimony	0.000	0.000
*Arsenic	0.000	0.000
Cadmium	0.000	0.000
Chromium	0.000	0.000
Copper	0.000	0.000
*Lead	0.000	0.000
Nickel	0.000	0.000
Silver	0.000	0.000
Thallium	0.000	0.000
*Zinc	0.000	0.000
*Ammonia (as N)	0.000	0.000

*Regulated Pollutant

TABLE XII-5 (Continued)

PSNS FOR THE SECONDARY LEAD SUBCATEGORY

(e) Casting Contact Cooling PSNS

Pollutant or Pollutant Property	Maximum for Any One Day	Maximum for Monthly Average
Metric Units - mg/kg of lead cast English Units - lbs/million lbs of lead cast		
*Antimony	0.042	0.019
*Arsenic	0.031	0.013
Cadmium	0.004	0.002
Chromium	0.008	0.003
Copper	0.028	0.013
*Lead	0.006	0.003
Nickel	0.012	0.008
Silver	0.006	0.003
Thallium	0.031	0.013
*Zinc	0.022	0.009
*Ammonia (as N)	0.000	0.000

TABLE XII-5 (Continued)

PSNS EFFLUENT LIMITATIONS FOR THE SECONDARY LEAD SUBCATEGORY

(f) Truck Wash PSNS

Pollutant or Pollutant Property	Maximum for Any One Day	Maximum for Monthly Average
Metric Units - mg/kg of lead produced from smelting English Units - lbs/million lbs of lead produced from smelting		
*Antimony	0.041	0.018
*Arsenic	0.029	0.012
Cadmium	0.004	0.002
Chromium	0.008	0.003
Copper	0.027	0.013
*Lead	0.006	0.003
Nickel	0.012	0.008
Silver	0.006	0.003
Thallium	0.029	0.013
*Zinc	0.021	0.009
*Ammonia (as N)	0.000	0.000

*Regulated Pollutant

TABLE XII-5 (Continued)

PSNS FOR THE SECONDARY LEAD SUBCATEGORY

(g) Facility Washdown PSNS

Pollutant or Pollutant Property	Maximum for Any One Day	Maximum for Monthly Average
Metric Units - mg/kg of lead produced from smelting English Units - lbs/million lbs of lead produced from smelting		
*Antimony	0.000	0.000
*Arsenic	0.000	0.000
Cadmium	0.000	0.000
Chromium	0.000	0.000
Copper	0.000	0.000
*Lead	0.000	0.000
Nickel	0.000	0.000
Silver	0.000	0.000
Thallium	0.000	0.000
*Zinc	0.000	0.000
*Ammonia (as N)	0.000	0.000

(h) Battery Case Classification PSNS

Pollutant or Pollutant Property	Maximum for Any One Day	Maximum for Monthly Average
Metric Units - mg/kg of lead scrap produced English Units - lbs/million lbs of lead scrap produced		
*Antimony	0.000	0.000
*Arsenic	0.000	0.000
Cadmium	0.000	0.000
Chromium	0.000	0.000
Copper	0.000	0.000
*Lead	0.000	0.000
Nickel	0.000	0.000
Silver	0.000	0.000
Thallium	0.000	0.000
*Zinc	0.000	0.000
*Ammonia (as N)	0.000	0.000

*Regulated Pollutant

TABLE XII-5 (Continued)

PSNS FOR THE SECONDARY LEAD SUBCATEGORY

(i) Employee Handwash PSNS

Pollutant or Pollutant Property	Maximum for Any One Day	Maximum for Monthly Average
Metric Units - mg/kg of lead produced from smelting English Units - lbs/million lbs of lead produced from smelting		
*Antimony	0.052	0.023
*Arsenic	0.038	0.015
Cadmium	0.005	0.002
Chromium	0.010	0.004
Copper	0.035	0.016
*Lead	0.008	0.004
Nickel	0.015	0.010
Silver	0.008	0.003
Thallium	0.038	0.016
*Zinc	0.028	0.011
*Ammonia (as N)	0.000	0.000

(i) Employee Respirator Wash PSNS

Pollutant or Pollutant Property	Maximum for Any One Day	Maximum for Monthly Average
Metric Units - mg/kg of lead produced from smelting English Units - lbs/million lbs of lead produced from smelting		
*Antimony	0.085	0.038
*Arsenic	0.061	0.025
Cadmium	0.009	0.004
Chromium	0.016	0.007
Copper	0.056	0.027
*Lead	0.012	0.006
Nickel	0.024	0.016
Silver	0.013	0.005
Thallium	0.062	0.027
*Zinc	0.045	0.018
*Ammonia (as N)	0.000	0.000

*Regulated Pollutant

TABLE XII-5 (Continued)

PSNS FOR THE SECONDARY LEAD SUBCATEGORY

(j) Laundering Uniforms PSNS

Pollutant or Pollutant Property	Maximum for Any One Day	Maximum for Monthly Average
Metric Units - mg/kg of lead produced from smelting English Units - lbs/million lbs of lead produced from smelting		
*Antimony	0.247	0.110
*Arsenic	0.178	0.073
Cadmium	0.026	0.010
Chromium	0.047	0.019
Copper	0.164	0.078
*Lead	0.036	0.017
Nickel	0.070	0.047
Silver	0.037	0.015
Thallium	0.179	0.078
*Zinc	0.131	0.054
*Ammonia (as N)	0.000	0.000

*Regulated Pollutant

Page Intentionally Blank

SECTION XIII

BEST CONVENTIONAL POLLUTANT CONTROL TECHNOLOGY

EPA is not promulgating best conventional pollutant control technology (BCT) for the secondary lead subcategory at this time.

Page Intentionally Blank

NONFERROUS METALS MANUFACTURING POINT SOURCE CATEGORY

DEVELOPMENT DOCUMENT SUPPLEMENT

for the

Primary Antimony Subcategory

William K. Reilly
Administrator

Rebecca Hanmer
Acting Assistant Administrator for Water

Martha Prothro, Director
Office of Water Regulations and Standards

Thomas P. O'Farrell, Director
Industrial Technology Division

Ernst P. Hall, P.E., Chief
Metals Industry Branch
and
Technical Project Officer

May 1989

U.S. Environmental Protection Agency
Office of Water
Office of Water Regulations and Standards
Industrial Technology Division
Washington, D. C. 20460

Page Intentionally Blank

PRIMARY ANTIMONY SUBCATEGORY

TABLE OF CONTENTS

Section		Page
I	SUMMARY	2053
II	CONCLUSIONS	2055
III	SUBCATEGORY PROFILE	2061
	Description of Primary Antimony Production	2061
	Raw Materials	2062
	Pyrometallurgical Processes	2062
	Leaching	2062
	Autoclaving	2062
	Electrowinning	2063
	Conversion to Antimony Trioxide	2063
	Process Wastewater Sources	2063
	Other Wastewater Sources	2064
	Age, Production, and Process Profile	2064
IV	SUBCATEGORIZATION	2071
	Factors Considered in Subcategorization	2071
	Factors Considered in Subdividing the Primary Antimony Subcategory	2071
	Other Factors	2072
	Production Normalizing Parameters	2072
V	WATER USE AND WASTEWATER CHARACTERISTICS	2073
	Wastewater Flow Rates	2074
	Wastewater Characteristics Data	2075
	Data Collection Portfolios	2075
	Field Sampling Data	2075
	Wastewater Characteristics and Flows by Subdivision	2075
	Sodium Antimonate Autoclave Wastewater	2076
	Fouled Anolyte	2076
	Cathode Antimony Wash Water	2077
VI	SELECTION OF POLLUTANT PARAMETERS	2083
	Conventional and Nonconventional Pollutant Parameters	2083
	Conventional Pollutant Parameters Selected	2083
	Priority Pollutants	2084
	Priority Pollutants Never Detected	2084
	Priority Pollutants Selected for Further Consideration in Limitations and Standards	2084

TABLE OF CONTENTS (Continued)

Section		Page
VII	CONTROL AND TREATMENT TECHNOLOGIES	2091
	Current Control and Treatment Practices	2091
	Sodium Antimonate Autoclave Wastewater	2091
	Fouled Anolyte	2091
	Cathode Antimony Wash Water	2092
	Control and Treatment Options	2092
	Option A	2092
	Option C	2092
VIII	COSTS, ENERGY, AND NONWATER QUALITY ASPECTS	2093
	Treatment Options for Existing Sources	2093
	Option A	2093
	Option C	2093
	Cost Methodology	2093
	Nonwater Quality Aspects	2094
	Energy Requirements	2094
	Solid Waste	2094
	Air Pollution	2095
IX	BEST PRACTICABLE CONTROL TECHNOLOGY CURRENTLY AVAILABLE	2097
	Technical Approach to BPT	2097
	Industry Cost and Pollutant Removal Estimates	2099
	BPT Option Selection	2099
	Wastewater Discharge Rates	2100
	Sodium Antimonate Autoclave Wastewater	2100
	Fouled Anolyte	2101
	Cathode Antimony Wash Water	2101
	Regulated Pollutant Parameters	2101
	Effluent Limitations	2102
X	BEST AVAILABLE TECHNOLOGY ECONOMICALLY ACHIEVABLE	2107
	Technical Approach to BAT	2107
	Option A	2108
	Option C	2108
	Industry Cost and Pollutant Removal Estimates	2108
	Pollutant Removal Estimates	2109
	Compliance Costs	2109
	BAT Option Selection - Proposal	2110
	BAT Option Selection - Promulgation	2110
	Wastewater Discharge Rates	2111
	Regulated Pollutant Parameters	2111
	Effluent Limitations	2112

TABLE OF CONTENTS (Continued)

Section		Page
XI	NEW SOURCE PERFORMANCE STANDARDS	2121
	Technical Approach to NSPS	2121
	NSPS Option Selection - Proposal	2122
	NSPS Option Selection - Promulgation	2122
	Regulated Pollutant Parameters	2122
	New Source Performance Standards	2122
XII	PRETREATMENT STANDARDS	2127
	Technical Approach to Pretreatment	2127
	Pretreatment Standards for New Sources	2128
	PSNS Option Selection - Proposal	2128
	PSNS Option Selection - Promulgation	2128
	Regulated Pollutant Parameters	2129
	Pretreatment Standards for New Sources	2129
XIII	BEST CONVENTIONAL POLLUTANT CONTROL TECHNOLOGY	2133

LIST OF TABLES

Table	Title	Page
III-1	Initial Operating Year (Range) Summary of Plants in the Primary Antimony Subcategory By Discharge Type	2065
III-2	Production Ranges for the Primary Antimony Subcategory	2066
III-3	Summary of Primary Antimony Subcategory and Associated Waste Streams	2067
V-1	Water Use and Discharge Rate for Sodium Antimonate Autoclave Wastewater	2078
V-2	Water Use and Discharge Rate for Fouled Anolyte	2078
V-3	Water Use and Discharge Rate for Cathode Antimony Wash Water	2078
V-4	Primary Antimony Sampling Data Fouled Anolyte Autoclave Discharge Raw Wastewater	2078
V-5	Post-Proposal Self sampling Data	2080
V-6	Presence of Toxic Metal Pollutants, dcp Data	2081
VI-1	Frequency of Occurrence of Priority Pollutants Primary Antimony Raw Wastewater	2086
VI-2	Priority Pollutants Never Detected	2087
VIII-1	Cost of Compliance for the Primary Antimony Subcategory Direct Dischargers	2096
IX-1	BPT Wastewater Discharge Rates for the Primary Antimony Subcategory	2103
IX-2	BPT Mass Limitations for the Primary Antimony Subcategory	2104

LIST OF TABLES (Continued)

Table	Title	Page
X-1	Pollutant Removal Estimates for Direct Dischargers in the Primary Antimony Subcategory	2113
X-2	Cost of Compliance for the Primary Antimony Subcategory Direct Dischargers	2114
X-3	BAT Wastewater Discharge Rates for the Primary Antimony Subcategory	2115
X-4	BAT Limitations for the Primary Antimony Subcategory	2116
XI-1	NSPS Wastewater Discharge Rates for the Primary Antimony Subcategory	2123
XI-2	NSPS for the Primary Antimony Subcategory	2124
XII-1	PSNS Wastewater Discharge Rates for the Primary Antimony Subcategory	2130
XII-2	PSNS for the Primary Antimony Subcategory	2131

LIST OF FIGURES

Figure	Title	Page
III-1	Primary Antimony Production Process (Pyrometallurgical)	2068
III-2	Primary Antimony Production Process (Hydrometallurgical)	2069
III-3	Geographic Locations of the Primary Antimony Subcategory Plants	2072
IX-1	BPT Treatment Scheme for the Primary Antimony Subcategory	2106
X-1	BAT Treatment Scheme for Option A	2118
X-2	BAT Treatment Scheme for Option C	2119

SECTION I

SUMMARY

This document and the administrative record provide the technical basis for promulgating effluent limitations based on best practicable technology (BPT) and best available technology (BAT) for existing direct dischargers, pretreatment standards for new indirect dischargers (PSNS), and standards of performance for new source direct dischargers (NSPS) for plants in the primary antimony subcategory.

The primary antimony subcategory is comprised of eight plants. Of the eight plants, one discharges directly to a river, four plants achieve zero discharge of process wastewater, and three plants generate no process wastewater.

EPA first studied the primary antimony subcategory to determine whether differences in raw materials, final products, manufacturing processes, equipment, age and size of plants, or water usage, required the development of separate effluent limitations and standards for different segments of the subcategory. This involved a detailed analysis of wastewater discharge and treated effluent characteristics, including (1) the sources and volume of water used, the processes used, and the sources of pollutants and wastewaters in the plant; and (2) the constituents of wastewaters, including priority pollutants. As a result, three subdivisions, or building blocks, have been identified for this subcategory that warrant separate effluent limitations. These include:

- Sodium antimonate autoclave wastewater,
- Fouled anolyte, and
- Cathode antimony wash water.

Several distinct control and treatment technologies (both in-plant and end-of-pipe) applicable to the primary antimony subcategory were identified. The Agency analyzed both historical and newly generated data on the performance of these technologies, including their nonwater quality environmental impacts and air quality, solid waste generation, and energy requirements. EPA also studied various flow reduction techniques reported in the data collection portfolios (dcp) and plant visits.

Engineering costs were prepared for each of the control and treatment options considered for the subcategory. These costs were then used by the Agency to estimate the impact of implementing the various options on the subcategory. For each control and treatment option that the Agency found to be most effective and technically feasible in controlling the discharge of pollutants, the number of potential closures, number of

employees affected, and impact on price were estimated. These results are reported in a separate document entitled "The Economic Impact Analysis of Effluent Limitations and Standards for the Nonferrous Metals Manufacturing Industry."

After examining the various treatment technologies, the Agency has identified BPT as the average of the best existing technology. Metals removal based on chemical precipitation and sedimentation technology, with sulfide precipitation preliminary pretreatment, is the basis for the BPT limitations. To meet the BPT effluent limitations based on this technology, the primary antimony subcategory is expected to incur an estimated capital cost of $146,350 and an annual cost of $554,180.

For BAT, filtration is added as an effluent polishing step to the model BPT end-of-pipe technology To meet the BAT effluent limitations based on this technology, the primary antimony subcategory is estimated to incur a capital cost of $208,300 and an annual cost of $560,400.

NSPS is equivalent to BAT. In selecting NSPS, EPA recognized that new plants have the opportunity to implement the best and most efficient manufacturing processes and treatment technology. As such, the technology basis of BAT has been determined as the best demonstrated technology.

PSES is not being promulgated for this subcategory because there are no existing indirect dischargers in the primary antimony subcategory. For PSNS, the Agency selected end-of-pipe treatment technology equivalent to BAT.

The best conventional technology (BCT) replaces BAT for the control of conventional pollutants. BCT is not being promulgated at this time because the methodology for BCT has not yet been finalized.

The mass limitations and standards for BPT, BAT, NSPS, and PSNS are presented in Section II.

SECTION II

CONCLUSIONS

EPA has divided the primary antimony subcategory into three subdivisions or building blocks for the purpose of effluent limitations and standards. These subdivisions are:

(a) Sodium antimonate autoclave wastewater,
(b) Fouled anolyte, and
(c) Cathode antimony wash water.

BPT is promulgated based on the performance achievable by the application of chemical precipitation and sedimentation technology, and sulfide precipitation preliminary treatment. The following BPT effluent limitations are promulgated:

BPT LIMITATIONS FOR THE PRIMARY ANTIMONY SUBCATEGORY

(a) Sodium Antimonate Autoclave Wastewater

Pollutant or Pollutant Property	Maximum for Any One Day	Maximum for Monthly Average
mg/kg (lb/million lbs) of antimony contained in sodium antimonate product		
Antimony	44.840	20.000
Arsenic	32.650	14.530
Mercury	3.906	1.562
Total suspended solids	640.600	304.700
pH	Within the range of 7.5 to 10.0 at all times	

(b) Fouled Anolyte

Pollutant or Pollutant Property	Maximum for Any One Day	Maximum for Monthly Average
mg/kg (lb/million lbs) of antimony metal produced by electrowinning		
Antimony	44.840	20.000
Arsenic	32.650	14.530
Mercury	3.906	1.562
Total suspended solids	640.600	304.700
pH	Within the range of 7.5 to 10.0 at all times	

(c) Cathode Antimony Wash Water

Pollutant or Pollutant Property	Maximum for Any One Day	Maximum for Monthly Average
mg/kg (lb/million lbs) of antimony metal produced by electrowinning		
Antimony	89.680	40.000
Arsenic	65.310	29.060
Mercury	7.812	3.125
Total suspended solids	1,281.000	609.300
pH	Within the range of 7.5 to 10.0 at all times	

BAT is promulgated based on the performance achievable by the application of chemical precipitation, sedimentation, and multimedia filtration technology, and sulfide precipitation pretreatment. The following BAT effluent limitations are promulgated:

BAT LIMITATIONS FOR THE PRIMARY ANTIMONY SUBCATEGORY

(a) Sodium Antimonate Autoclave Wastewater

Pollutant or Pollutant Property	Maximum for Any One Day	Maximum for Monthly Average
mg/kg (lb/million lbs) of antimony contained in sodium antimonate product		
Antimony	30.150	13.440
Arsenic	21.720	9.687
Mercury	2.344	0.937

(b) Fouled Anolyte

Pollutant or Pollutant Property	Maximum for Any One Day	Maximum for Monthly Average
mg/kg (lb/million lbs) of antimony metal produced by electrowinning		
Antimony	30.150	13.440
Arsenic	21.720	9.687
Mercury	2.344	0.937

(c) Cathode Antimony Wash Water

Pollutant or Pollutant Property	Maximum for Any One Day	Maximum for Monthly Average
mg/kg (lb/million lbs) of antimony metal produced by electrowinning		
Antimony	60.310	26.870
Arsenic	43.430	19.370
Mercury	4.687	1.875

NSPS are promulgated based on the performance achievable by the application of chemical precipitation, sedimentation, and multimedia filtration technology, and sulfide precipitation

preliminary pretreatment. The following effluent standards are promulgated for new sources:

NSPS FOR THE PRIMARY ANTIMONY SUBCATEGORY

(a) Sodium Antimonate Autoclave Wastewater

Pollutant or Pollutant Property	Maximum for Any One Day	Maximum for Monthly Average
mg/kg (lb/million lbs) of antimony contained in sodium antimonate product		
Antimony	30.150	13.440
Arsenic	21.720	9.687
Mercury	2.344	0.937
Total suspended solids	234.400	187.500
pH	Within the range of 7.5 to 10.0 at all times	

(b) Fouled Anolyte

Pollutant or Pollutant Property	Maximum for Any One Day	Maximum for Monthly Average
mg/kg (lb/million lbs) of antimony metal produced by electrowinning		
Antimony	30.150	13.440
Arsenic	21.720	9.687
Mercury	2.344	0.937
Total suspended solids	234.400	187.500
pH	Within the range of 7.5 to 10.0 at all times	

(c) Cathode Antimony Wash Water

Pollutant or Pollutant Property	Maximum for Any One Day	Maximum for Monthly Average
mg/kg (lb/million lbs) of antimony metal produced by electrowinning		
Antimony	60.310	26.870
Arsenic	43.430	19.370
Mercury	4.687	1.875
Total suspended solids	468.700	375.000
pH	Within the range of 7.5 to 10.0 at all times	

PSES are not being promulgated for the primary antimony subcategory at this time because there are no existing indirect dischargers in the primary antimony subcategory.

PSNS are promulgated based on the performance achievable by the application of chemical precipitation, sedimentation, and multimedia filtration technology, with sulfide precipitation preliminary treatment. The following pretreatment standards are promulgated for new sources:

PSNS FOR THE PRIMARY ANTIMONY SUBCATEGORY

(a) Sodium Antimonate Autoclave Wastewater

Pollutant or Pollutant Property	Maximum for Any One Day	Maximum for Monthly Average
mg/kg (lb/million lbs) of antimony contained in sodium antimonate product		
Antimony	30.150	13.440
Arsenic	21.720	9.687
Mercury	2.344	0.937

(b) Fouled Anolyte

Pollutant or Pollutant Property	Maximum for Any One Day	Maximum for Monthly Average
mg/kg (lb/million lbs) of antimony metal produced by electrowinning		
Antimony	30.150	13.440
Arsenic	21.720	9.687
Mercury	2.344	0.937

(c) Cathode Antimony Wash Water

Pollutant or Pollutant Property	Maximum for Any One Day	Maximum for Monthly Average
mg/kg (lb/million lbs) of antimony metal produced by electrowinning		
Antimony	60.310	26.870
Arsenic	43.430	19.370
Mercury	4.687	1.875

EPA is not promulgating BCT at this time for the primary antimony subcategory.

SECTION III

SUBCATEGORY PROFILE

This section of the primary antimony supplement describes the raw materials and processes used in producing primary antimony and presents a profile of the primary antimony plants identified in this study. For a discussion of the purpose, authority, and methodology for this study and for a general description of the nonferrous metals manufacturing category, refer to Section III of the General Development Document.

Although there are about 112 minerals of antimony, the principal ore mineral is stibnite, the sulfide of antimony. Antimony also occurs in other metal ores, including gold-quartz deposits and copper-lead-zinc deposits. The major use of antimony metal is as an alloying constituent which increases the strength and inhibits the corrosion of lead and other metals.

Industrial applications of antimony are primarily as an alloying agent and include use as a hardener in lead storage batteries, tank linings, and chemical pumps and pipes. Of the many antimony compounds available commercially, the most important is antimony trioxide (Sb_2O_3). Antimony trioxide is used for flameproofing plastics, paints, vinyls, fabrics, and chemicals. It is also used in ceramics to impart hardness and acid resistance to enamel coverings.

DESCRIPTION OF PRIMARY ANTIMONY PRODUCTION

There are two general types of methods of manufacturing antimony and its compounds: hydrometallurgical methods and pyrometallurgical methods. Antimony metal is produced from antimony minerals or ore by smelting. Antimony trioxide is produced from antimony metal or ore concentrates by roasting or burning. These pyrometallurgical processes, practiced at five of the eight antimony plants identified in this subcategory, generate no process wastewater.

Hydrometallurgical processing, practiced at the remaining three antimony plants, can be used to produce antimony metal, antimony trioxide, and sodium antimonate ($NaSbO_3$). Hydrometallurgical processing can be divided into four distinct stages: leaching, autoclaving, electrowinning, and conversion to antimony trioxide. The actual processes used at each plant vary with the type and purity of the raw materials used as well as with the type of antimony product manufactured. The primary antimony production processes, both pyrometallurgical and hydrometallurgical, are presented in Figures III-1 and III-2 (pages 2068 and 2069) and described below.

RAW MATERIALS

The principal source of antimony is the sulfide mineral stibnite. Stibnite, the sulfide of antimony together with its oxidized equivalents, is mined in several countries including Mexico, China, Peru, Yugoslavia, and Algeria. Virtually all domestic production of primary antimony metal is a by-product of the refining of base metal and silver ores. Antimony trioxide is produced from imported ores, antimony metal, and crude antimony oxide from South Africa.

PYROMETALLURGICAL PROCESSES

Antimony metal can be produced by smelting antimony minerals or ore with appropriate fluxes. Metal of 99 percent purity can be manufactured by this process with no generation of wastewater.

Antimony trioxide can be produced by burning or roasting ore concentrates or antimony metal. Burning converts the sulfide ore to volatile antimony trioxide. Evaporation separates the slag from the trioxide which two plants reported is collected in a baghouse and packaged for sale. One plant practices wet air pollution control to recover antimony from the gases leaving the baghouse. Because the scrubber liquor from this product recovery step is completely recycled in order to recover antimony, the final emissions scrubber is not considered to be a wastewater source in this subcategory. No plants in this subcategory reported sulfur dioxide (SO_2) emissions from the antimony trioxide production process.

LEACHING

A variety of antimony compounds can be produced from ore concentrates by hydrometallurgical processes. Leaching of the concentrate is conducted batchwise in a heated, pressurized vat. Some concentrates are blended with coke, sodium sulfate, and sodium carbonate and melted in a furnace before leaching with a sodium hydroxide solution. Other concentrates are combined with sodium sulfide and sulfur and leached with a sodium hydroxide solution without prior melting. In either case, the leaching process produces soluble Na_3SbS_3 and Na_3AsS_3.

Solids are separated from the leaching solution by thickening and filtration. The residue, which contains compounds such as pyrite, silica, stibnite, soluble arsenic, and $NaAsS_3$, is either disposed of or further processed to recover other metals. Antimony is recovered from the leaching solution either by autoclaving or by electrowinning, depending on the product desired.

AUTOCLAVING

Sodium antimonate ($NaSbO_3$) is produced by autoclaving the antimony-bearing solution from the leaching process. Autoclaving consists of heating the solution under pressure in the presence

of oxygen. The elevated temperature and pressure drive the oxidation reaction resulting in the formation of insoluble sodium antimonate which is separated from the remaining liquid. After drying, the product is packaged and sold. The autoclave discharge is the only wastewater generated by this process.

ELECTROWINNING

Antimony metal is recovered from the pregnant solution from the leaching process by electrowinning. Antimony is deposited on the cathode as a brittle, non-adherent layer which is periodically stripped and washed. It is then either sold or further processed to antimony trioxide. The wash water is discharged.

Because the products of oxidation at the anode interfere with the deposition of antimony at the cathode, two different and physically separated solutions are used. The catholyte, which in this case is the pregnant solution from the leaching process, surrounds the cathode and the anolyte surrounds the anode. Intermingling of the two solutions is minimized by a canvas barrier. Small pores in the canvas allow the solutions to contact maintaining the integrity of the electrical circuit.

After the antimony has been removed, the barren catholyte is recycled to the process using one of two methods. At the plant which reports melting of the ore before leaching, spent electrolyte is spray dried. The dried salts are captured in a baghouse and recycled to the blending step. At the two plants which leach concentrates without first melting them, barren catholyte solution is recycled directly to the leaching process. One of those two plants removes the fouled anolyte and treats it by autoclaving to recover sodium antimonate for recycle to the leaching process. The fouled anolyte discharge is the only wastewater generated by the electrowinning process. The subsequent autoclaving of this stream is considered to be a preliminary wastewater treatment process and is distinguished from autoclaving to produce sodium antimonate as a final product.

CONVERSION TO ANTIMONY TRIOXIDE

Antimony metal produced by electrowinning or purchased antimony metal can be converted to antimony trioxide in a fuming furnace. The product of this process is captured in a baghouse and sold. There is no generation of wastewater during this conversion process.

PROCESS WASTEWATER SOURCES

Although a variety of processes are involved in primary antimony production, the process wastewater sources can be subdivided as follows:

1. Sodium antimonate autoclave wastewater,
2. Fouled anolyte, and
3. Cathode antimony wash water.

The cathode antimony wash water waste stream was not given a discharge allowance at proposal because the one plant in the subcategory which reported this waste stream did not supply information in its dcp to quantify the wastewater discharge from this operation, leading EPA to believe that it was insignificant. Since proposal, the Agency has received information which allowed EPA to calculate water use and discharge rates for this waste stream. Therefore, the Agency has added this new building block to the subcategory.

OTHER WASTEWATER SOURCES

There are other waste streams associated with the primary antimony subcategory. These waste streams include stormwater runoff, and maintenance and cleanup water. These waste streams are not considered as a part of this rulemaking. EPA believes that the flows and pollutant loadings associated with these waste streams are insignificant relative to the waste streams selected, and are best handled by the appropriate permit authority on a case-by-case basis under authority of Section 402 of the Clean Water Act.

AGE, PRODUCTION, AND PROCESS PROFILE

Figure III-3 (page 2070) shows the location of the eight primary antimony plants operating in the United States. The plants are geographically scattered, located in seven states across the country.

Table III-1 (page 2065) shows the relative age and discharge status of the antimony plants. The oldest plant was built in the 1880's, and three others are more than 30 years old. Two new plants have been built within the last 10 years. From Table III-2 (page 2066), it can be seen that six of the seven plants that provided production information produced less than 300 kkg/yr of antimony and antimony compounds. The one remaining plant produced more than 2,000 kkg/yr of antimony in the form of antimony trioxide.

Table III-3 (page 2067) provides a summary of the number of plants using specific manufacturing processes and the number of plants generating wastewater for the streams associated with those processes.

Table III-1

INITIAL OPERATING YEAR (RANGE) SUMMARY OF PLANTS
IN THE PRIMARY ANTIMONY SUBCATEGORY BY DISCHARGE TYPE

	Initial Operating Year (Range) (Plant Age in Years)							
Type of Plant	1982-1973 (0-10)	1972-1963 (11-20)	1962-1953 (21-30)	1952-1943 (31-40)	1942-1933 (41-50)	1932-1923 (51-60)	Before 1923 (60+)	Total*
Direct	0	0	0	0	0	1	0	1
Zero	1	1	0	1	0	0	0	3
Dry	1	0	0	0	1	0	1	3
TOTAL*	2	1	0	1	1	1	1	7

*One plant in this subcategory did not provide initial operating year information.

Table III-2

PRODUCTION RANGES FOR THE PRIMARY ANTIMONY SUBCATEGORY

Type of Plant	Antimony Production Range for 1982					Total Number of Plants*
	0-100 (kkg/yr)	101-200 (kkg/yr)	201-300 (kkg/yr)	301-1,000 (kkg/yr)	1,001-2,500 (kkg/yr)	
Direct	0	0	1	0	0	1
Zero	1	0	1**	0	1†	3
Dry	1	1†	1	0	0	3
TOTAL	2	1	3	0	1	7

*One plant in this subcategory did not provide production information.

**Production value includes Sb_2O_3 and $NaSbO_3$ produced.

†Production value includes Sb_2O_3 produced.

TABLE III-3

SUMMARY OF PRIMARY ANTIMONY SUBCATEGORY PROCESSES AND ASSOCIATED WASTE STREAMS

Process or Waste Stream	Number of Plants With Process or Waste Stream	Number of Plants Reporting Generation of Wastewater
Pyrometallurgical Processes	5	
Leaching	3	
Autoclaving	2	
Sodium antimonate autoclave wastewater	2	1
Electrowinning	3	
Fouled anolyte	3	1
Cathode antimony wash water	2	1
Conversion to antimony trioxide	2	

* - Through reuse or evaporative practices, a plant may generate a wastewater from a particular process but not discharge it.

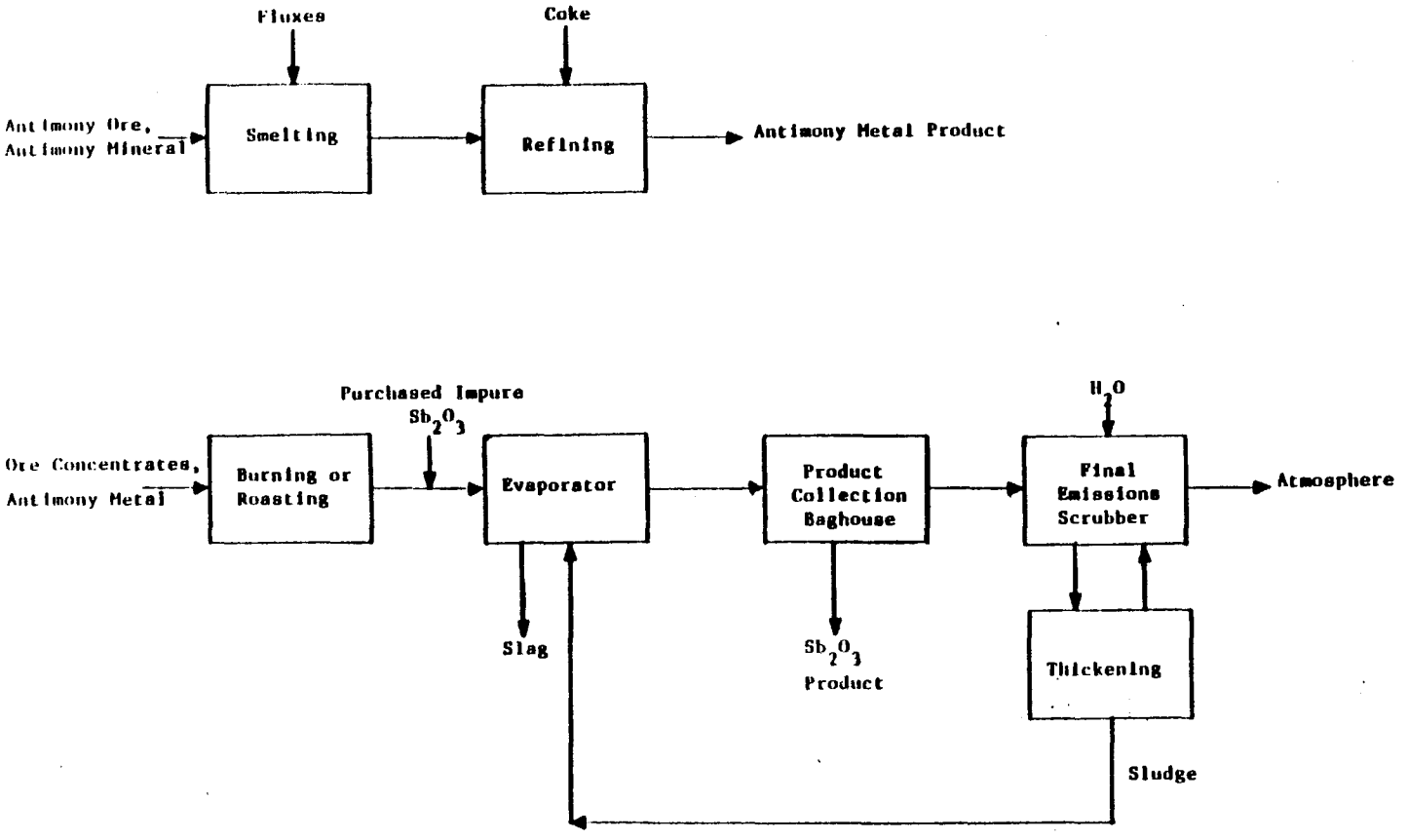

Figure III-1

PRIMARY ANTIMONY PRODUCTION PROCESS (PYROMETALLURGICAL)

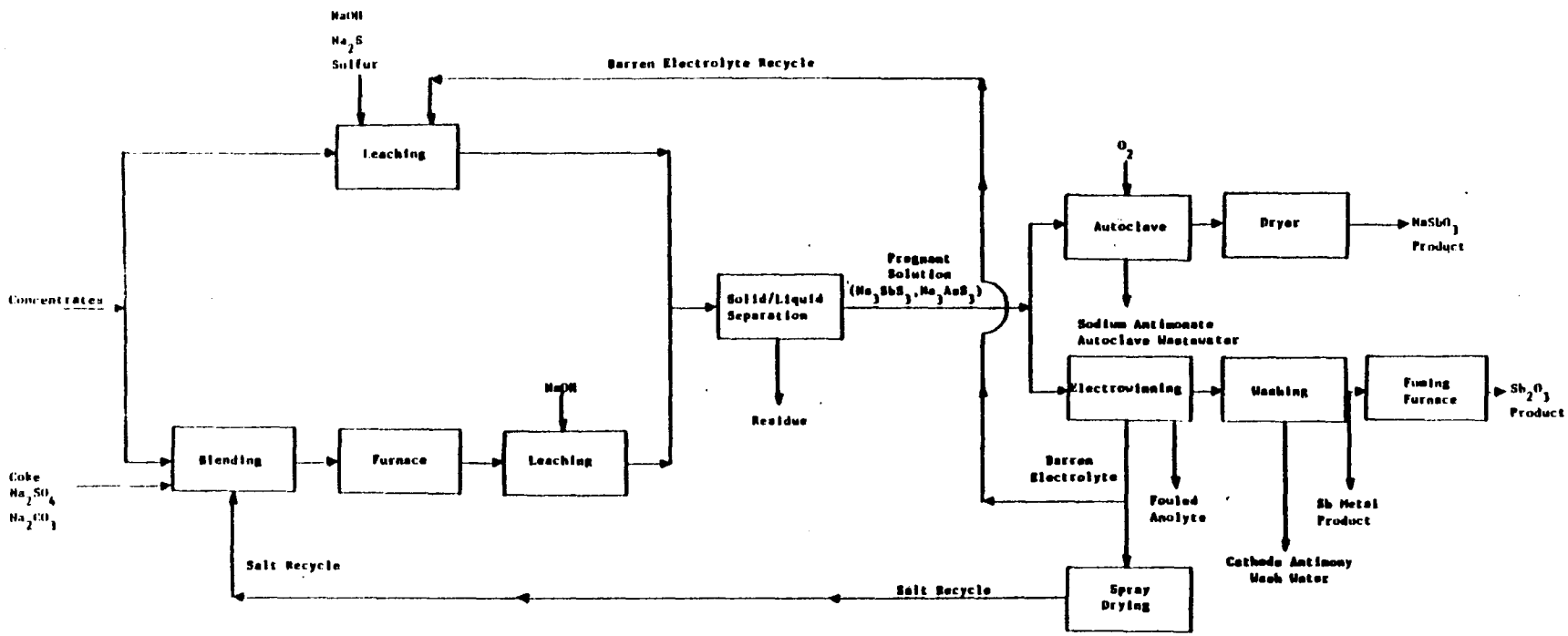

Figure III-2

PRIMARY ANTIMONY PRODUCTION PROCESS (HYDROMETALLURGICAL)

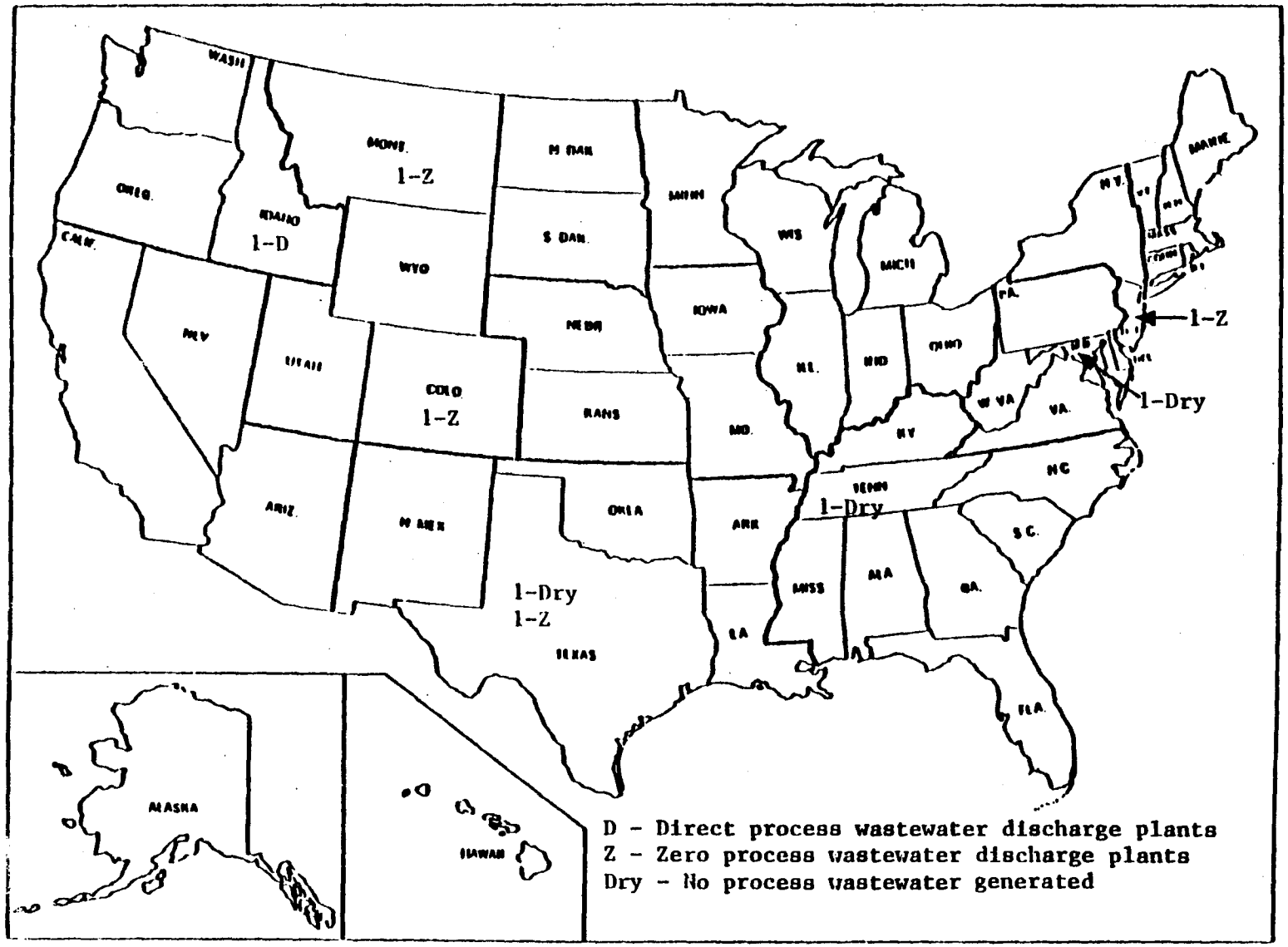

Figure III-3

GEOGRAPHIC LOCATIONS OF THE PRIMARY ANTIMONY SUBCATEGORY PLANTS

SECTION IV

SUBCATEGORIZATION

This section summarizes the factors considered during the designation of the primary antimony subcategory and its related subdivisions. Production normalizing parameters for each building block are also discussed.

FACTORS CONSIDERED IN SUBDIVIDING THE PRIMARY ANTIMONY SUBCATEGORY

The factors listed for general subcategorization were each evaluated when considering subdivision of the primary antimony subcategory. In the discussion that follows, the factors will be described as they pertain to this particular subcategory.

The rationale for considering segmentation of the primary antimony subcategory is based primarily on differences in the production processes and raw materials used. Within this subcategory, a number of different operations are performed, which may or may not have a water use or discharge, and which may require the establishment of separate effluent limitations. While primary antimony is still considered a single subcategory, a more thorough examination of the production processes has illustrated the need for limitations and standards based on a specific set of waste streams. Limitations will be based on specific flow allowances for the following building blocks.

1. Sodium antimonate autoclave wastewater,
2. Fouled anolyte, and
3. Cathode antimony wash water.

These building blocks represent the only reported sources of wastewater in this subcategory and follow directly from differences in the production states of primary antimony.

The plant which manufactures sodium antimonate autoclaves the antimony bearing solution from the leaching process. The first building block is associated with the wastewater discharged from this autoclaving operation.

When fouled anolyte is removed from the electrowinning operation and autoclaved for sodium antimonate recovery, a wastewater stream is produced at one plant. Other plants recycle the electrolyte with no reported wastewater discharge. Thus, the second building block accounts for operational differences in the electrowinning state of antimony production.

The third building block results from washing of antimony product as reported by one plant in the subcategory. Subsequent to electrowinning, antimony metal is stripped from the host cathode

and washed with water prior to sale. A once-through flow is employed to maximize cleansing of the final product.

OTHER FACTORS

The other factors considered in this evaluation were shown to be inappropriate bases for further segmentation. Air pollution control methods, treatment costs, and total energy requirements are functions of the selected subcategorization factors, namely metal product, raw materials, and production processes. Therefore, they are not independent factors and do not affect the subcategorization which has been developed. As discussed in Section IV of Vol. I, certain other factors, such as plant age, plant size, and the number of employees, were also evaluated and determined to be inappropriate for use as bases for subdivision of nonferrous metals plants.

PRODUCTION NORMALIZING PARAMETERS

As discussed previously, the effluent limitations and standards developed in this document establish mass limitations for the discharge of specific pollutant parameters. To allow these regulations to be applied to plants with various production capacities, the mass of pollutant discharged must be related to a unit of production. This factor is known as the production normalizing parameter (PNP).

In general, for each production process which has a wastewater associated with it, the mass of antimony contained in the product is used as the PNP. Thus, the PNPs for the three building blocks are as follows:

	Building Block	PNP
1.	Sodium antimonate autoclave wastewater	antimony contained in sodium antimonate product
2.	Fouled anolyte	antimony metal produced by electrowinning
3.	Cathode antimony wash water	antimony metal produced by electrowinning

SECTION V

WATER USE AND WASTEWATER CHARACTERISTICS

This section describes the characteristics of the wastewaters associated with the primary antimony subcategory. Water use and discharge rates are explained and then summarized in Tables V-1 through V-4 (pages 2078 - 2079). Data used to characterize the wastewaters are presented. Finally, the specific source, water use and discharge flows, and wastewater characteristics for each separate wastewater source are discussed.

In the development of effluent limitations and standards for this subcategory, two principal data sources were used: data collection portfolios (dcp) and field sampling results. Data collection portfolios contain information regarding wastewater flows and production levels.

In order to conduct an analysis of the primary antimony subcategory waste streams and quantify the pollutant discharge from plants in this subcategory, the levels of priority pollutants in the wastewaters must be known. Although data were not obtained by sampling a primary antimony plant, one plant submitted sampling data of their wastewater in the dcp. The data consist of analyses for two classes of pollutants: priority metal pollutants, and conventional pollutants. Samples were not analyzed for priority organic pollutants because there was no reason to believe that organic pollutants would be present in wastewaters generated by the primary antimony subcategory. Because the analytical standard for TCDD was judged to be too hazardous to be made generally available, samples were never analyzed for this pollutant. Samples were also not analyzed for asbestos or cyanide. There is no reason to expect that TCDD, asbestos, or cyanide would be present in primary antimony wastewater.

Additional wastewater characteristics and flow and production data were received through industry comments between proposal and promulgation. This aided EPA in recalculating regulatory flows, and in promulgating discharge allowances which had not previously been proposed for cathode antimony wash water. These data were submitted as confidential and are maintained in that status.

After proposal, EPA gathered additional wastewater sampling data for the sodium antimonate autoclave wastewater and the cathode antimony wash water building blocks. These data were acquired through a self-sampling program conducted by the industry at the specific request of EPA. These data are displayed in Table V-5 (page 2080). These data support the assumptions which EPA had made concerning the presence and concentrations of pollutants in those subdivisions where we did not have analytical data for specific pollutants. For this reason, the selection of pollutant parameters for limitation in this subcategory (Section VI) has

not been revised based on this new data.

As described in Section IV of this supplement, the primary antimony subcategory has been divided into three building blocks, so that the promulgated regulation contains mass discharge limitations and standards for three processes discharging process wastewater. Differences in the wastewater characteristics associated with these processes are to be expected. For this reason, wastewater streams corresponding to each segment are addressed separately in the discussions that follow. These wastewater sources are:

1. Sodium antimonate autoclave wastewater,
2. Fouled anolyte, and
3. Cathode antimony wash water.

WASTEWATER FLOW RATES

Data supplied by dcp responses were evaluated, and two flow-to-production ratios, water use and wastewater discharge flow, were calculated for each stream. The two ratios are differentiated by the flow value used in calculation. Water use is defined as the volume of water or other fluid required for a given process per mass of antimony produced and is therefore based on the sum of recycle and makeup flows to a given process. Wastewater flow discharged after pretreatment or recycle (if these are present) is used in calculating the production normalized flow -- the volume of wastewater discharged from a given process to further treatment, disposal, or discharge per mass of antimony produced. Differences between the water use and wastewater flows associated with a given stream result from recycle, evaporation, and carryover on the product. The production values used in calculation correspond to the production normalizing parameter, PNP, assigned to each stream, as outlined in Section IV. As an example, sodium antimonate autoclave wastewater is related to the production of antimony contained in the sodium antimonate product. As such, the discharge rate is expressed in liters of autoclave wastewater per metric ton of antimony contained in the sodium antimonate product (gallons of wastewater per ton of antimony contained in the sodium antimonate product). The production normalized discharge flows were compiled by stream type. These production normalized water use and discharge flows are presented in Tables V-1 through V-3 (page 2078). Where appropriate, an attempt was made to identify factors that could account for variations in water use and discharge rates. These variations are discussed later in this section. A similar analysis of factors affecting the wastewater flows is presented in Sections X, XI, and XII where representative BAT, NSPS, and pretreatment flows are selected for use in calculating the effluent limitations.

The water use and discharge rates shown do not include nonprocess wastewater, such as rainfall runoff and noncontact cooling water.

WASTEWATER CHARACTERISTICS DATA

Data used to characterize the various wastewaters associated with primary antimony production come from various sources: data collection portfolios, analytical data from field sampling, comments on the proposal and self-sampling information.

DATA COLLECTION PORTFOLIOS

In the data collection portfolios, the antimony plants that generate wastewater were asked to specify the presence of priority pollutants in their wastewater. Of the five primary antimony plants that generate wastewater, three responded to this portion of the questionnaire. No plant responding to the questionnaire reported the presence of any priority organic pollutants. The responses for the priority metals and cyanide are summarized in Table V-6 (page 2081).

FIELD SAMPLING DATA

Sampling data for the primary antimony subcategory were provided by one company in its dcp and by one company through a self-sampling effort.

Raw wastewater data are summarized in Table V-4 (page 2079). Analytical results for eight samples of the fouled anolyte autoclave discharge were provided in one dcp. The data included results for several priority metals and two conventional pollutant parameters. No priority organic, cyanide or source water data were provided.

Table V-4 includes some samples measured at concentrations considered not quantifiable. The detection limits shown on the data tables are not the same in all cases as the published detection limits for these pollutants by the same analytical methods. The detection limits used were reported with the analytical data and hence are the appropriate limits to apply to the data. Detection limit variation can occur as a result of a number of laboratory-specific, equipment-specific, and daily operator-specific factors. These factors can include day-to-day differences in machine calibration, variation in stock solutions, and variation in operators.

Second, the analysis of data includes some samples measured at concentrations considered not quantifiable. If a pollutant is reported as not detected, a value of zero is used in calculating the average. Priority metal values reported as less than a certain value are considered as not quantifiable and a value of zero is used in the calculation of the average.

WASTEWATER CHARACTERISTICS AND FLOWS

Since primary antimony production involves three principal sources of wastewater and each has potentially different

characteristics and flows, the wastewater characteristics and discharge rates corresponding to each subdivision will be described separately. A brief description of why the associated production processes generate a wastewater and explanations for variations of water use within each subdivision will also be discussed.

SODIUM ANTIMONATE AUTOCLAVE WASTEWATER

Sodium antimonate ($NaSbO_3$) is produced by autoclaving the antimony-bearing solution from the leaching process with oxygen. The autoclave wastewater is discharged. The production normalized water use and discharge rates for sodium antimonate autoclave wastewater are given in Table V-1 (page 2078) in liters per metric ton of antimony contained in sodium antimonate product.

The one company which reports this wastewater stream did not provide flow rate information. It is assumed that the amount of wastewater generated by autoclaving the leaching solution is the same as the amount of wastewater generated by electrowinning a solution containing the same amount of antimony. Therefore, the production normalized discharge flow for sodium antimonate autoclave discharge water is assumed to be equal to that for the fouled anolyte using the antimony content of the product as the production normalizing parameter.

No sampling data are available for this stream, but it is expected to be similar in composition to the fouled anolyte autoclave discharge for which data are present in Table V-4. The fouled anolyte wastewater is essentially the same as the sodium antimonate autoclave wastewater except that the influent to the fouled anolyte autoclave has had much of the antimony removed. The sodium antimonate autoclave wastewater is therefore expected to contain treatable concentrations of suspended solids and toxic metals, including antimony, arsenic, and mercury.

FOULED ANOLYTE

Antimony metal is produced by electrowinning the pregnant solution from the leaching process. Barren electrowinning solution is recycled to the process by various means at three plants. One of those plants removes a portion of the barren electrolyte, referred to as the fouled anolyte, and treats it by autoclaving with oxygen to recover sodium antimonate and discharges the remaining stream. The production normalized water use and discharge rates for fouled anolyte are given in Table V-2 (page 2078) in liters per metric ton of antimony metal produced by electrowinning.

At proposal, no sampling data were available for this stream, but it was expected to be similar in composition to the fouled anolyte autoclave discharge for which data are presented in Table V-4. Autoclaving is used as a treatment process to remove antimony as sodium antimonate from the fouled anolyte, but it is

not expected to greatly affect other components of the wastewater. The fouled anolyte stream was therefore expected to be characterized by treatable concentrations of suspended solids and toxic metals, including antimony, arsenic, and mercury.

Following proposal, sampling data were acquired for this subdivision through a self-sampling effort. These data are presented in Table V-5 (page 2080). These data show treatable concentrations of antimony, arsenic and mercury, thus corroborating the data used at proposal.

CATHODE ANTIMONY WASH WATER

Antimony metal produced by electrowinning collects on a host cathode. The cathode is periodically stripped of metal and the pure antimony product is washed with water. This washing is the final cleansing operation in the antimony production process at the one plant reporting this waste stream. Production normalized water use and discharge rates for cathode antimony wash water are given in Table V-3 (page 2078) in liters per metric ton of antimony metal produced by electrowinning.

Field sampling data for cathode antimony wash water were obtained from industry but are considered confidential. These data characterize the waste stream as containing treatable concentrations of toxic metals such as antimony, arsenic, lead, and copper. Data for conventional and nonconventional pollutants were not provided.

Following proposal, sampling data were acquired for this subdivision through a self-sampling effort. These data show treatable concentrations of antimony and arsenic and a quantifiable concentration of copper.

TABLE V-1

WATER USE AND DISCHARGE RATE FOR
SODIUM ANTIMONATE AUTOCLAVE WASTEWATER

(l/kkg of antimony contained in sodium antimonate product)

Plant Code	Percent Recycle	Production Normalized Water Use	Production Normalized Discharge Flow
1157	NR	NR	15624*

NR - Data not reported in dcp
* - Assumed value (see text)

TABLE V-2

WATER USE AND DISCHARGE RATE FOR
FOULED ANOLYTE

(l/kkg of antimony metal produced by electrowinning)

Plant Code	Percent Recycle	Production Normalized Water Use	Production Normalized Discharge Flow
1159	0	15624	15624

TABLE V-3

WATER USE AND DISCHARGE RATE FOR
FOULED ANOLYTE

(l/kkg of antimony metal produced by electrowinning)

Plant Code	Percent Recycle	Production Normalized Water Use	Production Normalized Discharge Flow
1159	0	31248	31248

Table V-4

PRIMARY ANTIMONY SAMPLING DATA
FOULED ANOLYTE AUTOCLAVE DISCHARGE
RAW WASTEWATER

Pollutant	Concentrations (mg/l) Day 1	Day 2	Day 3	Day 4	Day 5	Day 6
Toxic Pollutants						
114. antimony	28.6	110	15.4 14.5	12.5 3.7	120	20
115. arsenic	1,680	3,093	260 262	3,700 3,100	882	2,845
118. cadmium	<0.005	<0.01	<0.002 <0.002	<0.01 <0.01	0.30	0.210
120. copper	0.40	0.30	0.50 0.30	0.30 0.20	0.8	0.33
122. lead	<0.01	<0.10	<0.10 <0.10	<0.10 <0.10	<0.10	3.05
123. mercury		6.0	2.90 1.23	7.0 0.015	12.6	7.32
128. zinc	0.01	0.10	<0.10 <0.10	<0.10 <0.10	<0.1	0.27
Conventional Pollutants						
total suspended solids (TSS)	1,050	775		370 0	348	1,256
pH (standard units)	12.85	12.95	13.25 13.40	13.05 13.05	13.10	13.00

†Sample Type: Unknown

TABLE V-5

PRIMARY ANTIMONY SAMPLING DATA
RAW WASTEWATER -- SELF SAMPLING (mg/l)

POLLUTANT	FOULED ANOLYTE	CATHODE ANTIMONY WASH WATER
Sample Number	88148	88149
Toxic Pollutants		
114. Antimony	217.0	31.0
115. Arsenic	2430.0	4.887
117. Beryllium	<0.5	<0.05
118. Cadmium	0.07	<0.05
119. Chromium	<5.0	<0.10
120. Copper	<0.1	0.33
122. Lead	<2.0	<0.20
123. Mercury	22.3	<0.0002
124. Nickel	<0.2	<0.20
128. Zinc	<0.2	<0.05
Nonconventional Pollutants		
Aluminum	<5.0	<0.50
Cobalt	<5.0	<5.0
Iron	5.8	4.13
Manganese	<0.5	<0.05
Molybdenum	<5.0	<0.50
Tin	<50.0	<5.0
Titanium	(20.0	<0.20
Vanadium	25.0	<1.0

TABLE V-6

PRESENCE OF TOXIC METAL POLLUTANTS - DCP DATA

Pollutant	Known Present	Believed Present (Based on Raw Materials and Process Chemicals Used)
Antimony	2	0
Arsenic	2	1
Beryllium	0	0
Cadmium	1	0
Chromium	0	0
Copper	0	0
Cyanide	0	0
Lead	1	0
Mercury	1	0
Nickel	0	0
Selenium	1	0
Silver	0	0
Thallium	1	0
Zinc	1	0

Page Intentionally Blank

SECTION VI

SELECTION OF POLLUTANT PARAMETERS

This section examines chemical analysis data presented in Section V and discusses the selection or exclusion of pollutants for potential limitation. The basis for the regulation of toxic and other pollutants, along with a discussion of each pollutant selected for potential limitation, is discussed in Section VI of Vol. 1. That discussion provides information concerning the nature of the pollutant (i.e., whether it is a naturally occurring substance, processed metal, or a manufactured compound); general physical properties and the form of the pollutant; toxic effects of the pollutant in humans and other animals: and behavior of the pollutant in POTW at the concentrations expected in industrial discharges.

The discussion that follows presents and briefly discusses the selection of conventional pollutants and pollutant parameters for effluent limitations. Also described is the analysis that was performed to exclude or select for further consideration priority pollutants for limitations and standards. Pollutants will be considered for limitation if they are present in concentrations treatable by the technologies considered in this analysis. The treatable concentrations used for the priority metals were the long-term performance values achievable by chemical precipitation, sedimentation, and filtration. The treatable concentrations used for the priority organics were the long-term performance values achievable by carbon adsorption.

CONVENTIONAL AND NONCONVENTIONAL POLLUTANT PARAMETERS

This study examined samples from the primary antimony subcategory for two conventional pollutant parameters (total suspended solids and pH).

CONVENTIONAL POLLUTANT PARAMETERS SELECTED

The conventional pollutants or pollutant parameters selected for limitation in this subcategory are:

total suspended solids (TSS)
pH

Nonconventional pollutant parameters were not selected for limitation in this subcategory.

TSS concentrations ranging from 348 to 1,256 mg/l were observed in the five raw waste samples analyzed for TSS in this study. All five concentrations were well above the 2.6 mg/l treatment effectiveness concentration. Most of the specific methods used to remove toxic metals from a wastewater do so by converting them to precipitates. Meeting a limit on total suspended solids

ensures that removal of these precipitated toxic metals has been effective. For this reason, total suspended solids is selected for limitation in this subcategory.

The eight pH values observed during this study ranged from 12.85 to 13.40, all outside the 7.5 to 10.0 range considered desirable for discharge to receiving waters. Effective removal of toxic metals by chemical precipitation requires careful control of pH. Therefore, pH is selected for limitation in this subcategory.

PRIORITY POLLUTANTS

The frequency of occurrence of the priority pollutants in the raw wastewater samples is presented in Table VI-1 (page 2086). Table VI-1 is based on the raw wastewater data provided for the fouled anolyte autoclave discharge (see Section V). These data provide the basis for the categorization of specific pollutants, as discussed below.

PRIORITY POLLUTANTS NEVER DETECTED

The priority pollutants listed in Table VI-2 (page 2087) were not detected in any raw wastewater samples from this subcategory. Therefore, they are not selected for consideration in establishing limitations.

PRIORITY POLLUTANTS SELECTED FOR FURTHER CONSIDERATION IN ESTABLISHING LIMITATIONS AND STANDARDS

The priority pollutants listed below are selected for further consideration in establishing limitations and standards for this subcategory. The priority pollutants selected for further consideration for limitation are each discussed following the list.

114. antimony
115. arsenic
118. cadmium
120. copper
122. lead
123. mercury
128. zinc

Antimony was found in eight samples at concentrations ranging from 3.7 to 120 mg/l. All eight concentrations were above the 0.47 mg/l concentration considered achievable by identified treatment technology. Therefore, antimony is selected for further consideration for limitation in this subcategory.

Arsenic was detected in eight samples at concentrations ranging from 260 to 3,700 mg/l. All eight concentrations were above the 0.34 mg/l treatability concentration. Therefore, arsenic is selected for further consideration for limitation.

Cadmium was detected in quantifiable concentrations in two of eight samples (0.21 and 0.30 mg/l). Both of these samples were above the 0.049 mg/l treatability concentration. Therefore, cadmium is selected for further consideration for limitation.

Copper was detected in eight samples at concentrations ranging from 0.20 to 0.8 mg/l. Three of those samples were above the 0.39 mg/l treatability concentration. Therefore, copper is selected for further consideration for limitation.

Lead was found in one of eight samples above quantification, at a concentration of 3.05 mg/l. That sample was above the 0.08 mg/l treatability concentration. Furthermore, antimony is often recovered from lead-copper-zinc ores. Therefore, lead is selected for further consideration for limitation.

Mercury was detected in seven samples at concentrations ranging from 0.015 to 12.6 mg/l. Six of those samples were above the 0.036 mg/l treatability concentration. Therefore, mercury is selected for further consideration for limitation.

Zinc was found in two of eight samples at quantifiable concentrations (0.10 and 0.27 mg/l). One of those samples was above the 0.23 mg/l concentration considered achievable by identified treatment technology. Furthermore, antimony is often recovered from copper-lead-zinc ores. Therefore, zinc is selected for further consideration for limitation in this subcategory.

Table VI-1

FREQUENCY OF OCCURRENCE OF PRIORITY POLLUTANTS
PRIMARY ANTIMONY
RAW WASTEWATER

Pollutant	Analytical Quantification Concentration (mg/l)(a)	Treatable Concentration (mg/l)(b)	Number of Streams Analyzed	Number of Samples Analyzed	ND	Detected Below Quantification Concentration	Detected Below Treatable Concentration	Detected Above Treatable Concentration
114. antimony	0.100	0.47	1	8				8
115. arsenic	0.010	0.34	1	8				8
117. beryllium	0.010	0.20	0					
118. cadmium	0.002	0.049	1	8		6		2
119. chromium	0.005	0.07	0					
120. copper	0.009	0.39	1	8			5	3
121. cyanide (c)	0.02	0.047	0					
122. lead	0.020	0.08	1	8		7		1
123. mercury	0.0001	0.036	1	7			1	6
124. nickel	0.005	0.22	0					
125. selenium	0.01	0.20	0					
126. silver	0.02	0.07	0					
127. thallium	0.100	0.34	0					
128. zinc	0.050	0.23	1	8		6	1	1

(a) Analytical quantification concentration was reported with the data (see Section V).

(b) Treatable concentrations are based on performance of chemical precipitation, sedimentation, and filtration.

(c) Analytical quantification concentration for EPA Method 335.2, Total Cyanide Methods for Chemical Analysis of Water and Wastes, EPA 600/4-79-020, March 1979.

TABLE VI-2

PRIORITY POLLUTANTS NEVER DETECTED

1. acenaphthene*
2. acrolein*
3. acrylonitrile*
4. benzene*
5. benzidine*
6. carbon tetrachloride (tetrachloromethane)*
7. chlorobenzene*
8. 1,3,4-trichlorobenzene*
9. hexachlorobenzene*
10. 1,2-dichloroethane*
11. 1,1,1-trichloroethane*
12. hexachloroethane*
13. 1,1-dichloroethane*
14. 1,1,2-trichloroethane*
15. 1,1,2,2-tetrachloroethane*
16. chloroethane*
17. bis (chloromethyl) ether (DELETED)*
18. bis (2-chloroethyl) ether*
19. 2-chloroethyl vinyl ether (mixed)*
20. 2-chloronaphthalene*
21. 2,4,6-trichlorophenol*
22. parachlorometa cresol*
23. chloroform (trichloromethane)*
24. 2-chlorophenol*
25. 1,2-dichlorobenzene*
26. 1,3-dichlorobenzene*
27. 1,4-dichlorobenzene*
28. 3,3'-dichlorobenzidine*
29. 1,1-dichloroethylene*
30. 1,2-trans-dichloroethylene*
31. 2,4-dichlorophenol*
32. 1,2-dichloropropane*
33. 1,2-dichloropropylene (1,3-dichloropropene)*
3?. 2,4-dimethylphenol*
35. 2,4-dinitrotoluene*
36. 2,6-dinitrotoluene*
37. 1,2-diphenylhydrazine*
38. ethylbenzene*
39. fluoranthene*
40. 4-chlorophenyl phenyl ether*
41. 4-bromophenyl phenyl ether*
42. bis (2-chloroisopropyl) ether*
43. bis (2-choroethoxy) methane*
44. methylene chloride (dichloromethane)*
45. methyl chloride (chloromethane)*
46. methyl bromide (bromomethane)*
47. bromoform (tribromomethane)*

TABLE VI-2 (Continued)

PRIORITY POLLUTANTS NEVER DETECTED

48. dichlorobromomethane*
49. trichlorofluoromethane (DELETED)*
50. dichlorofluoromethane (DELETED)*
51. chlorodibromomethane*
52. hexachlorobutadiene*
53. hexachlorocyclopentadiene*
54. isophorone*
55. naphthalene*
56. nitrobenzene*
57. 2-nitrophenol*
58. 4-nitrophenol*
59. 2,4-dinitrophenol*
60. 4,6-dinitro-o-cresol*
61. N-nitrosodimethylamine*
62. N-nitrosodiphenylamine*
63. N-nitrosodi-n-propylamine*
64. pentachlorophenol*
65. phenol*
66. bis(2-ethylhexyl) phthalate*
67. butyl benzyl phthalate*
68. di-n-butyl phthalate*
69. di-n-octyl phthalate*
70. diethyl phthalate*
71. dimethyl phthalate*
72. benzo (a)anthracene (1,2-benzanthracene)*
73. benzo (a)pyrene (3,4-benzopyrene)*
74. 3,4-benzofluoranthene*
75. benzo(k)fluoranthane (11,12-benzofluoranthene)*
76. chrysene*
77. acenaphthylene*
78. anthracene*
79. benzo(ghi)perylene (1,11-benzoperylene)*
80. fluorene*
81. phenanthrene*
82. dibenzo (a,h)anthracene (1,2,5,6-dibenzanthracene)*
83. indeno (1,2,3-cd)pyrene (w,e,-o-phenylenepyrene)*
84. pyrene*
85. tetrachloroethylene*
86. toluene*
87. trichloroethylene*
88. vinyl chloride (chloroethylene)*
89. aldrin*
90. dieldrin*
91. chlordane (technical mixture and metabolites)*
92. 4,4'-DDT*
93. 4,4'-DDE(p,p'DDX)*
94. 4,4'-DDD(p,p'TDE)*
95. Alpha-endosulfan*

TABLE VI-2 (Continued)

PRIORITY POLLUTANTS NEVER DETECTED

96. Beta-endosultan*
97. endosulfan sulfate*
98. endrin*
99. endrin aldehyde*
100. heptachlor*
101. heptachlor epoxide*
102. Alpha-BHC*
103. Beta-BHC*
104. Gamma-BHC (lindane)*
105. Delta-BHC*
106. PCB-1242 (Arochlor 1242)*
107. PCB-1254 (Arochlor 1254)*
108. PCB-1221 (Arochlor 1221)*
109. PCB-1232 (Arochlor 1232)*
110. PCB-1248 (Arochlor 1248)*
111. PCB-1260 (Arochlor 1260)*
112. PCB-1016 (Arochlor 1016)*
113. toxaphene*
116. asbestos (Fibrous)
117. beryllium*
119. chromium (Total)*
121. cyanide (Total)*
124. nickel*
125. selenium*
126. silver*
127. thallium*
129. 2,3,7,8-tetrachlorodibenzo-p-dioxin (TCDD)

*We did not analyze for these pollutants in samples of raw wastewater from this subcategory. These pollutants are not believed to be present based on the Agency's best engineering judgement which includes consideration of raw materials and process operations.

SECTION VII

CONTROL AND TREATMENT TECHNOLOGIES

The preceding sections of this supplement discussed the sources, flows, and characteristics of the wastewaters from primary antimony plants. This section summarizes the description of these wastewaters and indicates the treatment technologies which are currently practiced in the primary antimony subcategory for each waste stream. Secondly, this section presents the control and treatment technology options which were examined by the Agency for possible application to the primary antimony subcategory.

CURRENT CONTROL AND TREATMENT PRACTICES

This section presents a summary of the control and treatment technologies that are currently being applied to each of the sources generating wastewater in this subcategory. As discussed in Section V, wastewater associated with the primary antimony subcategory is characterized by the presence of the toxic metal pollutants and suspended solids. Generally, these pollutants are present at concentrations above the long term average concentration achievable by the treatment technologies considered. This analysis is supported by the raw (untreated) wastewater data presented in Section V. These wastewater streams may be combined to allow plants to take advantage of economies of scale. The options selected for consideration for BPT, BAT, NSPS, and pretreatment based on combined treatment of these compatible waste streams are summarized later in this section.

SODIUM ANTIMONATE AUTOCLAVE WASTEWATER

Sodium antimonate ($NaSbO_3$) is manufactured by autoclaving the antimony-bearing solution from the leaching process with oxygen. The autoclave wastewater is expected to contain treatable concentrations of suspended solids and toxic metals. One plant which manufactures sodium antimonate achieves zero discharge of this stream using evaporation ponds.

Another plant recovers sodium antimonate from spent electrowinning solution by autoclaving. The recovered sodium antimonate is recycled to the leaching process. This product recovery process is considered to be a wastewater treatment step and is distinguished from autoclaving to produce sodium antimonate as a product.

FOULED ANOLYTE

Antimony metal is recovered from the pregnant solution from the leaching process by electrowinning. All three of the plants which practice electrowinning recycle the barren electrolyte solution to leaching. One plant reports total recycle of the

spent electrowinning solution. The second plant spray dries the solution and recycles the dried salts. The third plant recycles some of the electrolyte but discharges the fouled anolyte portion. Fouled anolyte contains toxic metals and suspended solids. Sodium antimonate is recovered from the stream by autoclaving, and the autoclave wastewater is treated in a chemical precipitation and sedimentation system before discharge to a river.

CATHODE ANTIMONY WASH WATER

In the electrowinning process, antimony metal is plated onto a host cathode. The cathode is stripped and the antimony product is ready for sale or further processing. One plant processes the cathode antimony in a fuming furnace to produce antimony trioxide. Two other plants market the antimony metal produced from electrowinning. One reported washing of the product antimony prior to packaging, but the second plant did not. Wash water from cathode antimony washing contains treatable concentrations of toxic metals. The plant reporting this stream treats it in a chemical precipitation and sedimentation system before discharging to a river.

CONTROL AND TREATMENT OPTIONS

The Agency examined two control and treatment technology options that are applicable to the primary antimony subcategory. The options selected for evaluation represent applicable end-of-pipe treatment technologies.

OPTION A

The Option A treatment scheme for the primary antimony subcategory consists of chemical precipitation and sedimentation along with sulfide precipitation preliminary treatment for all waste streams. Chemical precipitation and sedimentation consists of lime addition to precipitate metals followed by gravity sedimentation for the removal of suspended solids, including the metal precipitates. Vacuum filtration is used to dewater the sludge.

OPTION C

Option C for the primary antimony subcategory consists of all control and treatment requirements of Option A (sulfide precipitation preliminary treatment, chemical precipitation and sedimentation) plus multimedia filtration technology added at the end of the Option A treatment scheme. Multimedia filtration is used to remove suspended solids, including precipitates of toxic metals, below the concentration attainable by gravity sedimentation. The model filter is of the gravity, mixed-media type, although other filters, such as rapid sand filters, would perform satisfactorily.

SECTION VIII

COSTS, ENERGY, AND NONWATER QUALITY ASPECTS

This section presents a summary of compliance costs for the primary antimony subcategory and a description of the treatment options and subcategory-specific assumptions used to develop these estimates. Together with the estimated pollutant removal performance presented in Sections X and XII of this supplement, these cost estimates provide a basis for evaluating each regulatory option. These cost estimates are also used in determining the probable economic impact of regulation on the subcategory at different pollutant discharge levels. In addition, this section addresses nonwater quality environmental impacts of wastewater treatment and control alternatives, including air pollution, solid wastes, and energy requirements, which are specific to the primary antimony subcategory.

TREATMENT OPTIONS FOR EXISTING SOURCES

As discussed in Section VII, two treatment options have been developed and considered in promulgating limitations and standards for the primary antimony subcategory. These options are summarized below and schematically presented in Figures X-1 and X-2 (pages 2118 and 2119).

OPTION A

The Option A treatment scheme consists of lime precipitation and sedimentation technology along with sulfide precipitation preliminary treatment.

OPTION C

Option C for the primary antimony subcategory consists of all control and treatment requirements of Option A (sulfide precipitation preliminary treatment, lime precipitation and sedimentation) plus multimedia filtration technology added at the end of the Option A treatment scheme.

COST METHODOLOGY

A detailed discussion of the methodology used to develop the compliance costs is presented in Section VIII of Vol. I. Plant-by-plant compliance costs for the nonferrous metals manufacturing category have been revised as necessary following proposal. These revisions calculate incremental costs, above treatment already in place, necessary to comply with the promulgated effluent limitations and standards and are presented in the administrative record supporting this regulation. A comparison of the costs developed for proposal and the revised costs for the final regulation are presented in Table VIII-1 (page 2096) for the direct discharger in this subcategory.

Each of the general assumptions used to develop compliance costs is presented in Section VIII of Vol. 1. No subcategory-specific assumptions were used in developing compliance costs for the primary antimony subcategory.

NONWATER QUALITY ASPECTS

Nonwater quality impacts specific to the primary antimony subcategory, including energy requirements, solid waste and air pollution are discussed below.

ENERGY REQUIREMENTS

Energy requirements for Option A are estimated at 409,000 kWh/yr, and for Option C the estimated requirement is 413,000 kWh/yr. Option C energy requirements increase over those for Option A because filtration is being added as an end-of-pipe treatment technology. The energy requirements of both options represent less than 10 percent of the total energy presently consumed at the discharging plant. It is, therefore, concluded that the energy requirements of the treatment options considered will have no significant impact on total plant energy consumption.

SOLID WASTE

Sludge generated in the primary antimony subcategory is due to the precipitation of metal sulfides using sulfide precipitation and metal hydroxides and carbonates using lime. Sludges associated with the primary antimony subcategory will necessarily contain quantities of toxic metal pollutants. These lime sludges are not subject to regulation as hazardous wastes since wastes generated by primary smelters and refiners are currently exempt from regulation by Act of Congress (Resource Conservation and Recovery Act (RCRA), Section 3001 (b)), as interpreted by EPA. If a small (5-10%) excess of lime is added during treatment, the Agency does not believe these sludges would be identified as hazardous under RCRA in any case. (Compliance costs include this amount of lime.) This judgment is based on the results of Extraction Procedure (EP) toxicity tests performed on similar sludges (toxic metal-bearing sludges) generated by other industries such as the iron and steel industry. A small amount of excess lime was added during treatment, and the sludges subsequently generated passed the toxicty test. See CFR $261.24. Thus, the Agency believes that the wastewater sludges will similarly not be EP toxic if the recommended technology is applied.

Sludges generated by sulfide precipitation preliminary treatment are expected to be hazardous, and were treated as such in the compliance cost estimates.

Although it is the Agency's view that solid wastes generated as a result of these guidelines are not expected to be hazardous, generators of these wastes must test the waste to determine if

the wastes meet any of the characteristics of hazardous waste (see 40 CFR 262.11).

If these wastes should be identified or are listed as hazardous, they will come within the scope of RCRA's "cradle to grave" hazardous waste management program, requiring regulation from, the point of generation to point of final disposition. EPA's generator standards would require generators of hazardous nonferrous metals manufacturing wastes to meet containerization, labeling, recordkeeping, and reporting requirements; if plants dispose of hazardous wastes off-site, they would have to prepare a manifest, which would track the movement of the wastes from the generator's premises to a permitted off-site treatment, storage, or disposal facility. See 40 CFR 262.20 45 FR 33142 (May 19, 1980), as amended at 45 FR 86973 (December 31, 1980). The transporter regulations require transporters of hazardous wastes to comply with the manifest system to assure that the wastes are delivered to a permitted facility. See 40 CFR 263.20 (45 FR 33151, May 19, 1980), as amended at 45 FR 86973 (December 31, 1980). Finally, RCRA regulations establish standards for hazardous waste treatment, storage, and disposal facilities allowed to receive such wastes. See 40 CFR Part 464 (46 FR 2802, January 12, 1981 and 47 FR 32274, July 26, 1982).

Even if these wastes are not identified as hazardous, they still must be disposed of in compliance with the Subtitle D open dumping standards, implementing 4004 of RCRA. See 44 FR 53438 (September 13, 1979).

It is estimated that the primary antimony subcategory will generate 3,260 metric tons of sludge per year when implementing the promulgated BPT treatment technology. The Agency has calculated as part of the costs for wastewater treatment the cost of hauling and disposing of these wastes. For more details, see Section VIII of the General Development Document.

AIR POLLUTION

There is no reason to believe that any substantial air pollution problems will result from implementation of sulfide precipitation, chemical precipitation, sedimentation, and multimedia filtration. These technologies transfer pollutants to solid waste and are not likely to transfer pollutants to air.

TABLE VIII-1

COST OF COMPLIANCE FOR THE PRIMARY ANTIMONY SUBCATEGORY
DIRECT DISCHARGERS

(March, 1982 Dollars)

Option	Proposal Costs Capital Cost	Proposal Costs Annual Cost	Promulgation Costs Capital Cost	Promulgation Costs Annual Cost
A	34200	17300	196400	554200
C	41250	21183	208300	560400

SECTION IX

BEST PRACTICABLE CONTROL TECHNOLOGY CURRENTLY AVAILABLE

This section defines the effluent characteristics attainable through the application of best practicable control technology currently available (BPT). BPT reflects the existing performance by plants of various sizes, ages, and manufacturing processes within the primary antimony subcategory, as well as the established performance of the recommended BPT systems. Particular consideration is given to the treatment already in place at plants within the data base.

The factors considered in identifying BPT include the total cost of applying the technology in relation to the effluent reduction benefits from such application, the age of equipment and facilities involved, the manufacturing processes used, nonwater quality environmental impacts (including energy requirements), and other factors the Administrator considers appropriate. In general, the BPT level represents the average of the existing performances of plants of various ages, sizes, processes, or other common characteristics. Where existing performance is uniformly inadequate, BPT may be transferred from a different subcategory or category. Limitations based on transfer of technology are supported by a rationale concluding that the technology is, indeed, transferable, and a reasonable prediction that it will be capable of achieving the prescribed effluent limits. BPT focuses on end-of-pipe treatment rather than process changes or internal controls, except where such practices are common industry practice.

TECHNICAL APPROACH TO BPT

The Agency studied the nonferrous metals category to identify the processes used, the wastewaters generated, and the treatment processes installed. Information was collected from industry using data collection portfolios, and specific plants were sampled and the wastewaters analyzed. In making technical assessments of data, reviewing manufacturing processes, and assessing wastewater treatment technology options, both indirect and direct dischargers have been considered as a single group. An examination of plants and processes did not indicate any process differences based on the type of discharge, whether it be direct or indirect.

As explained in Section IV, the primary antimony subcategory has been subdivided into three potential wastewater sources. Since the water use, discharge rates, and pollutant characteristics of each of these wastewaters is potentially unique, effluent limitations will be developed for each of the three segments.

For each of the segments, a specific approach was followed for the development of BPT mass limitations. The first requirement to calculate these limitations is to account for production and flow variability from plant to plant. Therefore, a unit of production or production normalizing parameter (PNP) was determined for each waste stream which could then be related to the flow from the process to determine a production normalized flow. Selection of the PNP for each process element is discussed in Section IV. Each plant within the subcategory was then analyzed to determine (1) which segments were present, (2) the specific flow rates generated for each segments, and (3) the specific production normalized flows for each subdivision. This analysis is discussed in detail in Section V. Nonprocess wastewaters such as rainfall runoff and noncontact cooling water are not considered in the analysis.

Production normalized flows for each segment were then analyzed to determine the flow to be used as part of the basis for BPT mass limitations. The selected flow (sometimes referred to as the BPT regulatory flow) reflects the water use controls which are common practices within the category. The BPT regulatory flow is based on the average of all applicable data. Plants with normalized flows above the average may have to implement some method of flow reduction to achieve the BPT limitations.

The second requirement to calculate mass limitations is the set of concentrations that are achievable by application of the BPT level of treatment technology. Section VII discusses the various control and treatment technologies which are currently in place for each wastewater source. In most cases throughout the nonferrous metals manufacturing category the current control and treatment technologies consist of lime precipitation and sedimentation (lime and settle) technology. For this subcategory, EPA is adding sulfide precipitation preliminary treatment for arsenic control to ensure that the level achievable by lime and settle is met.

Using these regulatory flows and the achievable concentrations, the next step is to calculate mass loadings for each wastewater source or building block. This calculation was made on a stream-by-stream basis, primarily because plants in this subcategory may perform one or more of the operations in various combinations. The mass loadings (milligrams of pollutant per metric ton of production -- mg/kkg) were calculated by multiplying the BPT regulatory flow (l/kkg) by the concentration achievable by the BPT level of treatment technology (mg/l) for each pollutant parameter to be limited under BPT.

The mass loadings which are allowed under BPT for each plant will be the sum of the individual mass loadings for the several building blocks sources which are found at particular plants. Accordingly, all the wastewater generated within a plant may be combined for treatment in a single or common treatment system, but the effluent limitations for these combined wastewaters are based on the specific sources which actually contribute to the

combined flow. This method accounts for the variety of combinations of wastewater sources and production processes which may be found at primary antimony plants.

The Agency usually establishes wastewater limitations in terms of mass rather than concentration. This approach prevents the use of dilution as a treatment method (except for controlling pH). The production normalized wastewater flow (l/kkg) is a link between the production operations and the effluent limitations. The pollutant discharge attributable to each operation can be calculated from the normalized flow and effluent concentration achievable by the treatment technology and summed to derive an appropriate limitation for each plant.

INDUSTRY COST AND POLLUTANT REMOVAL ESTIMATES

In balancing costs in relation to pollutant removal estimates, EPA considers the volume and nature of existing discharges, the volume and nature of discharges expected after application of BPT, the general environmental effects of the pollutants, and the cost and economic impacts of the required pollution control level. The Act does not require or permit consideration of water quality problems attributable to particular point sources or industries, or water quality improvements in particular water quality bodies. Accordingly, water quality considerations were not the basis for selecting the proposed or promulgated BPT. See Weyerhaeuser Company v. Costle, 590 F.2d 1011 (D.C. Cir. 1978).

The methodology for calculating pollutant removal estimates and plant compliance costs is discussed in Section X. The pollutant removal estimates have been revised since proposal based on comments and on new data. Table X-1 (page 2113) shows the pollutant removal estimates for each treatment option for direct dischargers. Compliance costs for direct dischargers are presented in Table X-2 (page 2114).

BPT OPTION SELECTION

The technology basis for the BPT limitations is Option A, sulfide precipitation preliminary treatment, and alkali precipitation and sedimentation technology to remove metals and solids from combined wastewaters and to control pH. The promulgated technology differs from the proposed technology in that it includes sulfide precipitation. Chemical precipitation and sedimentation technology is in-place at the one discharger in this subcategory. The BPT model treatment train is presented in Figure IX-1 (page 2103).

Implementation of the promulgated BPT limitations will remove annually an estimated 17,522 kg of toxic metals and 8,634 kg of TSS from the raw wastewater generated in primary antimony production operations. The Agency projects a capital cost of approximately $196,400 and an annualized cost of approximately $554,200 for achieving the promulgated BPT.

WASTEWATER DISCHARGE RATES

A BPT discharge rate is calculated for each segment based on the average of the flows of the existing plants, as determined from analysis of data collection portfolios. The discharge rate is used with the achievable treatment concentrations to determine BPT effluent limitations. Since the discharge rate may be different for each wastewater source, separate production normalized discharge rates for each of the three wastewater sources are discussed below and summarized in Table IX-1 (page 2103). The discharge rates are normalized on a production basis by relating the amount of wastewater generated to the mass of product which is produced by the process associated with the waste stream in question. These production normalizing parameters, or PNPs, are also listed in Table IX-1.

Section V of this supplement further describes the discharge flow rates and presents the water use and discharge flow rates for each plant by subdivision in Tables V-1 through V-3 (page 2078).

SODIUM ANTIMONATE AUTOCLAVE WASTEWATER

The BPT wastewater discharge allowance proposed for sodium antimonate autoclave wastewater was 7,093 l/kkg (1,700 gal/ton) of antimony contained in sodium antimonate product. No allowance is given if sodium antimonate is recovered for recycling by autoclaving fouled anolyte. In that case, autoclaving is considered to be a wastewater treatment step for product recovery. Because the one plant reporting this stream did not provide flow rate information in the dcp, the BPT discharge allowance for sodium antimonate autoclave wastewater was assumed to be equal to the BPT discharge allowance for fouled anolyte using the antimony content of the product as the production normalizing parameter.

The BPT wastewater discharge allowance promulgated for sodium antimonate autoclave wastewater is 15,624 l/kkg (3,744 gal/ton) of antimony contained in sodium antimonate product. This rate is allocated to any plant which produces sodium antimonate from a pregnant leaching solution by an autoclaving operation. No allowance is given when sodium antimonate is recovered for recycling by autoclaving fouled anolyte because in that case, autoclaving is considered to be a wastewater treatment step for product recovery.

No recycle or reuse of this wastewater is reported at the one plant that generates this stream. Because that plant did not provide flow rate information in the dcp, the BPT discharge allowance for sodium antimonate autoclave wastewater is assumed to be equivalent to the promulgated BPT discharge allowance for fouled anolyte, using the antimony content of the product as the production normalizing parameter. New flow and production data for the fouled anolyte waste stream resulted in a change from the proposed value. For this reason and those stated above, the promulgated discharge allowance for sodium antimonate autoclave

wastewater is 15,624 l/kkg.

FOULED ANOLYTE

The BPT wastewater discharge allowance proposed for fouled anolyte was 7,093 l/kkg (1,700 gal/ton) of antimony metal produced by electrowinning. The BPT allowance was based on the discharge rate at the only plant reporting this stream. That plant recovers and recycles sodium antimonate from the fouled anolyte before discharging the wastewater stream. Since proposal, industry comments which included flow and production information enabled EPA to recalculate production normalized flows. Based on this data, a new regulatory flow was chosen for the fouled anolyte wastewater stream.

The BPT wastewater discharge allowance promulgated for fouled anolyte is 15,624 l/kkg (3,744 gal/ton) of antimony metal produced by electrowinning. This rate is allocated to any plant which recovers antimony from a pregnant leaching solution by electrowinning. The promulgated BPT allowance is based on the water use rate at the only plant reporting this wastewater stream.

CATHODE ANTIMONY WASH WATER

A BPT discharge rate for cathode antimony wash water was never proposed because dcp information used at proposal did not quantify the wastewater discharge from this operation, leading EPA to believe that it was insignificant. Comments received from industry after proposal requesting an allowance for cathode antimony wash water supplied information which allowed water use and discharge rates to be calculated.

The BPT wastewater discharge rate for cathode antimony wash water is 31,248 l/kkg (7,488 gal/ton) of antimony metal produced by electrowinning. This rate is allocated to those plants which wash antimony metal produced by electrowinning prior to final packaging. This BPT flow is based on the discharge from one plant reporting this stream. Water use and discharge rates are presented in Table V-3 (page 2078).

REGULATED POLLUTANT PARAMETERS

The raw wastewater concentrations from individual operations and the subcategory as a whole were examined to select certain pollutant parameters for limitation. This examination and evaluation is presented in Sections VI and X. A total of five pollutants or pollutant parameters are selected for limitation under BPT and are listed below:

114. antimony
115. arsenic
123. mercury
TSS
pH

EFFLUENT LIMITATIONS

The treatable concentrations achievable by application of the promulgated BPT are discussed in Section VII of this supplement. These treatable concentrations (both one-day maximum and monthly average values) are multiplied by the BPT normalized discharge flows summarized in Table IX-1 (page 2103) to calculate the mass of pollutants allowed to be discharged per mass of product. The results of these calculations in milligrams of pollutant per kilogram of product represent the BPT effluent limitations and are presented in Table IX-2 (page 2104) for each individual waste stream.

TABLE IX-1

BPT WASTEWATER DISCHARGE RATES FOR THE PRIMARY ANTIMONY SUBCATEGORY

Wastewater Stream	BPT Normalized Discharge Rate (l/kkg)	(gal/ton)	Production Normalizing Parameter (PNP)
Sodium antimonate autoclave wastewater	15624	3744	Antimony contained in sodium antimonate product
Fouled Anolyte	15624	3744	Antimony metal produced by electrowinning
Cathode antimony wash water	31284	7488	Antimony metal produced by electrowinning

TABLE IX-2

BPT MASS LIMITATIONS FOR THE
PRIMARY ANTIMONY SUBCATEGORY

a) Sodium Antimonate Autoclave Wastewater BPT

Pollutant or pollutant property	Maximum for any one day	Maximum for monthly average
mg/kg (lb/million lbs) of antimony contained in sodium antimonate product		
*Antimony	44.840	20.000
*Arsenic	32.650	14.530
Cadmium	5.312	2.344
Copper	29.690	15.620
Lead	6.562	3.125
*Mercury	3.906	1.562
Zinc	22.810	9.531
*TSS	640.600	304.700
*pH Within the range of 7.5 to 10.0 at all times		

b) Fouled Anolyte BPT

Pollutant or pollutant property	Maximum for any one day	Maximum for monthly average
mg/kg (lb/million lbs) of antimony metal produced by electrowinning		
*Antimony	44.840	20.000
*Arsenic	32.650	14.530
Cadmium	5.312	2.344
Copper	29.690	15.620
Lead	6.562	3.125
*Mercury	3.906	1.562
Zinc	22.810	9.531
*TSS	640.600	304.700
*pH Within the range of 7.5 to 10.0 at all times		

*Regulated Pollutant

TABLE IX-2 (Continued)

BPT MASS LIMITATIONS FOR THE
PRIMARY ANTIMONY SUBCATEGORY

c) Cathode Antimony Wash Water BPT

Pollutant or pollutant property	Maximum for any one day	Maximum for monthly average
mg/kg (lb/million lbs) of antimony metal produced by electrowinning		
*Antimony	89.680	40.000
*Arsenic	65.310	29.060
Cadmium	10.620	4.687
Copper	59.370	31.250
Lead	13.120	6.250
*Mercury	7.812	3.125
Zinc	45.620	19.060
*TSS	1,281.000	609.300
*pH Within the range of 7.5 to 10.0 at all times		

*Regulated Pollutant

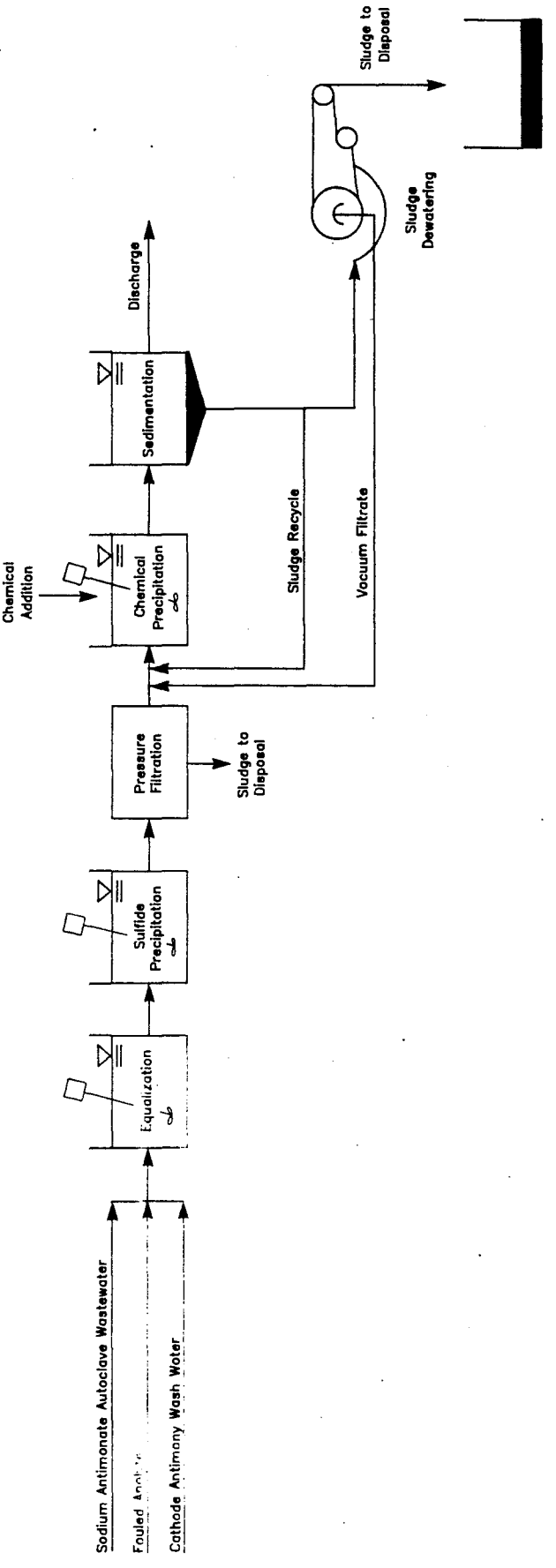

FIGURE IX-1 BPT TREATMENT FOR THE PRIMARY ANTIMONY SUBCATEGORY

SECTION X

BEST AVAILABLE TECHNOLOGY ECONOMICALLY ACHIEVABLE

These effluent limitations are based on the best control and treatment technology used by a specific point source within the industrial category or subcategory, or by another category from which it is transferable. Emphasis is placed on additional treatment techniques applied at the end of the treatment systems currently used, as well as reduction of the amount of water used and discharged, process control, and treatment technology optimization.

The factors considered in assessing best available technology economically achievable (BAT) include the age of equipment and facilities involved, the process used, process changes, nonwater quality environmental impacts (including energy requirements), and the costs of application of such technology BAT represents the best available technology economically achievable at plants of various ages, sizes, processes, or other characteristics. BAT may be transferred from a different subcategory or category. BAT may include feasible process changes or internal controls, even when not in common industry practice.

The required assessment of BAT considers costs, but does not require a balancing of costs against pollutant removals (see Weyerhaeuser v. Costle, 11 ERC 2149 (D.C. Cir. 1978)). However, in assessing the proposed and promulgated BAT, the Agency has given substantial weight to the economic achievability of the technology.

TECHNICAL APPROACH TO BAT

The Agency reviewed a wide range of technology options and evaluated the available possibilities to ensure that the most effective and beneficial technologies were used as the basis of BAT. To accomplish this, the Agency elected to examine two technology options which could he applied to the primary antimony subcategory as alternatives for the basis of BAT effluent limitations.

For the development of BAT effluent limitations, mass loadings were calculated for each wastewater source or subdivision in the subcategory using the same technical approach as described in Section IX for BPT limitations development. The differences in the mass loadings for BPT and BAT are due to increased treatment effectiveness achievable with the more sophisticated BAT treatment technology.

The treatment technologies considered for BAT are summarized below:

Option A (Figure X-1, page 2113):

- o Sulfide precipitation preliminary treatment
- o Chemical precipitation and sedimentation

Option C (Figure X-2, page 2114):

- o Sulfide precipitation preliminary treatment
- o Chemical precipitation and sedimentation
- o Multimedia filtration

The two options examined for BAT are discussed in greater detail below. The first option considered (Option A) is the same as the BPT treatment and control technology which was presented in the previous section. The second option represents substantial progress toward the reduction of pollutant discharges above and beyond the progress achievable by BPT.

OPTION A

Option A for the primary antimony subcategory is equivalent to the control and treatment technologies which were analyzed for BPT in Section IX (see Figure X-1). BPT consists of sulfide precipitation preliminary treatment to control arsenic discharge and end-of-pipe treatment including chemical precipitation and sedimentation. The discharge rates for Option A are equal to the discharge rates allocated to each stream as a BPT discharge flow.

OPTION C

Option C for the primary antimony subcategory consists of all control and treatment requirements of Option A (sulfide precipitation, chemical precipitation and sedimentation) plus multimedia filtration technology added at the end of the Option A treatment scheme (see Figure X-2). Multimedia filtration is used to remove suspended solids, including precipitates of toxic metals, beyond the concentrations attainable by gravity sedimentation. The filter suggested is of the gravity, mixed media type, although other forms of filters, such as rapid sand filters or pressure filters, would perform satisfactorily.

INDUSTRY COST AND POLLUTANT REMOVAL ESTIMATES

As one means of evaluating each technology option, EPA developed estimates of the pollutant removals and the compliance costs associated with each option. The methodologies are described below.

POLLUTANT REMOVAL ESTIMATES

A complete description of the methodology used to calculate the estimated pollutant removal achieved by the application of the various treatment options is presented in Section X of the Vol. 1. The pollutant removal estimates for this subcategory were revised between proposal and promulgation based on comments and new data; however, the methodology for calculating pollutant removals was not changed. The data used for estimating removals are the same as those used to revise the compliance costs.

Sampling data collected during the field sampling program were used to characterize the major waste streams considered for regulation. At each sampled facility, the sampling data was production normalized for each unit operation (i.e., mass of pollutant generated per mass of product manufactured). This value, referred to as the raw waste, was used to estimate the mass of toxic pollutants generated within the primary antimony subcategory. The pollutant removal estimates were calculated for each plant by first estimating the total mass of each pollutant in the untreated wastewater. This was calculated by first multiplying the raw waste values by the corresponding production value for that stream and then summing these values for each pollutant for every stream generated by the plant.

Next, the volume of wastewater discharged after the application of each treatment option was estimated for each operation at each plant by comparing the actual discharge to the regulatory flow. The smaller of the two values was selected and summed with the other plant flows. The mass of pollutant discharged was then estimated by multiplying the achievable concentration values attainable with the option (mg/l) by the estimated volume of process wastewater discharged by the subcategory. The mass of pollutant removed is the difference between the estimated mass of pollutant generated within the subcategory and the mass of pollutant discharged after application of the treatment option. The pollutant removal estimates for direct dischargers in the primary antimony subcategory are presented in Table X-1 (page 2113).

COMPLIANCE COSTS

In estimating subcategory-wide compliance costs, the first step was to develop a cost estimation model, relating the total costs associated with installation and operation of wastewater treatment technologies to plant process wastewater discharge. EPA applied the model to each plant. The plant's investment and operating costs are determined by what treatment it has in place and by its individual process wastewater discharge flow. As discussed above, this flow is either the actual or the BAT regulatory flow, whichever is lesser. The final step was to annualize the capital costs, and to sum the annualized capital costs, and the operating and maintenance costs for each plant, yielding the cost of compliance for the subcategory. A comparison of the costs developed for proposal and the revised

costs for promulgation are presented in Table X-2 (page 2114) for direct dischargers in the primary antimony subcategory. These costs were used in assessing economic achievability.

BAT OPTION SELECTION - PROPOSAL

EPA selected Option C for the proposed BAT which consists of sulfide precipitation preliminary treatment followed by chemical precipitation, sedimentation, and multimedia filtration. The estimated capital cost of proposed BAT was $41,250 (1982 dollars) and the annual cost was $21,183 (1982 dollars). Implementation of the proposed BAT technology was estimated to remove 2,644 kilograms of priority metal pollutants from raw wastewater annually.

BAT OPTION SELECTION - PROMULGATION

After proposal, EPA received comments reporting a waste stream that had not been included in the proposed rulemaking. Wastewater flow rates and production data were obtained and used to calculate production normalized flow rates and mass limitations. These data were also used for recalculating pollutant removal estimates and for revising compliance costs. In addition, EPA included sulfide precipitation preliminary treatment to help insure adequate arsenic removal. Sulfide is used to precipitate metals such as arsenic at a low pH which can then be removed with a pressure filter prior to the higher pH chemical precipitation processes.

EPA is promulgating BAT limitations for this subcategory based on sulfide precipitation preliminary treatment, chemical precipitation and sedimentation, and multimedia filtration. The technology basis for BAT limitations being promulgated differs from that used for the proposed limitations because it includes the sulfide precipitation step. However, the treatment performance concentrations, upon which the mass limitations are based, are equal to values used to calculate the proposed mass limitations.

EPA is promulgating multimedia filtration as part of the BAT technology because this technology results in additional removal of toxic metals. Filtration is also presently demonstrated at 25 plants throughout the nonferrous metals manufacturing category. Filtration adds reliability to the treatment system by making it less susceptible to operator error and to sudden changes in raw wastewater flow and pollutant concentrations.

Implementation of the control and treatment technologies of Option C will remove annually an estimated 17,540 kilograms of priority metal pollutants, which is 18 kilograms of priority metal pollutants over the estimated BPT removal. The estimated capital cost for achieving the promulgated BAT is $208,300 (1982 dollars) and the estimated annual cost is $560,400 (1982 dollars).

WASTEWATER DISCHARGE RATES

A BAT discharge rate was calculated for each subdivision based upon the flows of the existing plants, as determined from analysis of the data collection portfolios. The discharge rate is used with the achievable treatment concentrations to determine BAT effluent limitations. Since the discharge rate may be different for each wastewater source, separate production normalized discharge rates for each of the three wastewater sources were determined and are summarized in Table X-3 (page 2115). The discharge rates are normalized on a production basis by relating the amount of wastewater generated to the mass of product which is produced by the process associated with the waste stream in question. These production normalizing parameters, or PNPs, are also listed in Table X-3.

The BAT discharge allowances reflect no flow reduction requirements as compared to the promulgated BPT option flows. In-process flow reduction was not considered achievable for any wastewater streams in this subcategory. Consequently, the BAT and BPT production normalized discharge flows are identical.

REGULATED POLLUTANT PARAMETERS

In implementing the terms of the Consent Agreement in NRDC v. Train, Op. Cit., and 33 U.S.C. 1314(b)(2)(A and B) (1976), the Agency placed particular emphasis on the toxic pollutants. The raw wastewater concentrations from individual operations and the subcategory as a whole were examined to select certain pollutants and pollutant parameters for limitation. This examination and evaluation was presented in Section VI. The Agency, however, has chosen not to regulate all seven toxic pollutants selected for further consideration in this analysis.

The high cost associated with analysis for priority metal pollutants has prompted EPA to develop an alternative method for regulating and monitoring priority pollutant discharges from the nonferrous metals manufacturing category. Rather than establishing specific effluent mass limitations and standards for each of the priority metals found in treatable concentrations in the raw wastewater from a given subcategory, the Agency is promulgating effluent mass limitations only for those pollutants generated in the greatest quantities as shown by the pollutant removal analysis. The pollutants selected for specific limitation are listed below:

114. antimony
115. arsenic
123. mercury

EPA has revised the pollutant selection following proposal by eliminating lead from the list of limited pollutants because it will be controlled by the selected technology.

By establishing limitations and standards for certain priority

metal pollutants, dischargers are expected to attain the same degree of control over priority metal pollutants as they would have been required to achieve had all the priority metal pollutants been directly limited.

This approach is technically justified since the treatable concentrations used for chemical precipitation and sedimentation technology are based on optimized treatment for concomitant multiple metals removal. Thus, even though metals have somewhat different theoretical solubilities, they will be removed at very nearly the same rate in a chemical precipitation and sedimentation treatment system operated for multiple metals removal. Filtration as part of the technology basis is likewise justified because this technology removes metals non-preferentially.

The priority metal pollutants selected for specific limitation in the primary antimony subcategory to control the discharges of priority metal pollutants are antimony, arsenic, and mercury. The following toxic metal pollutants are excluded from limitation on the basis that they are effectively controlled by the limitations developed for antimony, arsenic, and mercury:

118. cadmium
120. copper
122. lead
128. zinc

EFFLUENT LIMITATIONS

The concentrations achievable by application of BAT are discussed in Section VII of this supplement. The achievable concentrations (both one day maximum and monthly average values) are multiplied by the BAT normalized discharge flows summarized in Table X-3 (page 2115) to calculate the mass of pollutants allowed to be discharged per mass of product. The results of these calculations in milligrams of pollutant per kilogram of product represent the promulgated BAT effluent limitations and are presented in Table X-4 (page 2116) for each waste stream.

Table X-1

POLLUTANT REMOVAL ESTIMATES FOR DIRECT DISCHARGERS
IN THE PRIMARY ANTIMONY SUBCATEGORY

Pollutant	Raw Waste (kg/yr)	Option A Discharge (kg/yr)	Option A Removed (kg/yr)	Option C Discharge (kg/yr)	Option C Removed (kg/yr)
Antimony	4,401.72	29.76	4,371.96	19.98	4,381.73
Arsenic	13,140.44	21.68	13,118.76	14.45	13,125.99
Cadmium	0.43	0.43	0	0.43	0
Chromium (total)	0	0	0	0	0
Copper	3.61	3.61	0	3.61	0
Cyanide (total)	0	0	0	0	0
Lead	3.27	3.27	0	3.27	0
Mercury	34.10	2.55	31.54	1.53	32.56
Nickel	0	0	0	0	0
Selenium	0	0	0	0	0
Silver	0	0	0	0	0
Thallium	0	0	0	0	0
Zinc	0.51	0.51	0	0.51	0
TOTAL PRIORITY POLLUTANTS	17,584.08	61.81	17,522.26	43.79	17,540.29
TSS	9,144.05	510.16	8,633.89	110.53	9,033.51
TOTAL CONVENTIONALS	9,144.05	510.16	8,633.89	110.53	9,033.51
TOTAL POLLUTANTS	26,728.12	571.97	26,156.15	154.32	26,573.80

TABLE X-2

COST OF COMPLIANCE FOR THE PRIMARY ANTIMONY SUBCATEGORY
DIRECT DISCHARGERS

(March, 1982 Dollars)

Option	Proposal Costs Capital Cost	Proposal Costs Annual Cost	Promulgation Costs Capital Cost	Promulgation Costs Annual Cost
A	34200	17300	196400	554200
C	41250	21183	208300	560400

TABLE X-3

BAT WASTEWATER DISCHARGE RATES FOR THE PRIMARY ANTIMONY SUBCATEGORY

Wastewater Stream	BPT Normalized Discharge Rate (l/kkg)	(gal/ton)	Production Normalizing Parameter (PNP)
Sodium antimonate autoclave wastewater	15624	3744	Antimony contained in sodium antimonate product
Fouled Anolyte	15624	3744	Antimony metal produced by electrowinning
Cathode antimony wash water	31284	7488	Antimony metal produced by electrowinning

TABLE X-4

BAT LIMITATIONS FOR THE
PRIMARY ANTIMONY SUBCATEGORY

a) Sodium Antimonate Autoclave Wastewater BAT

Pollutant or pollutant property	Maximum for any one day	Maximum for monthly average
mg/kg (lb/million lbs) of antimony contained in sodium antimonate product		
*Antimony	30.150	13.440
*Arsenic	21.720	9.687
Cadmium	3.125	1.250
Copper	20.000	9.531
Lead	4.375	2.031
*Mercury	2.344	0.937
Zinc	15.940	6.562

b) Fouled Anolyte BAT

Pollutant or pollutant property	Maximum for any one day	Maximum for monthly average
mg/kg (lb/million lbs) of antimony metal produced by electrowinning		
*Antimony	30.150	13.440
*Arsenic	21.720	9.687
Cadmium	3.125	1.250
Copper	20.000	9.531
Lead	4.375	2.031
*Mercury	2.344	0.937
Zinc	15.940	6.562

*Regulated Pollutant

Table X-4 (Continued)

BAT LIMITATIONS FOR THE
PRIMARY ANTIMONY SUBCATEGORY

c) Cathode Antimony Wash Water BAT

Pollutant or pollutant property	Maximum for any one day	Maximum for monthly average
mg/kg (lb/million lbs) of antimony metal produced by electrowinning		
*Antimony	60.310	26.870
*Arsenic	43.430	19.370
Cadmium	6.250	2.500
Copper	40.000	19.060
Lead	8.749	4.062
*Mercury	4.687	1.875
Zinc	31.870	13.120

*Regulated Pollutant

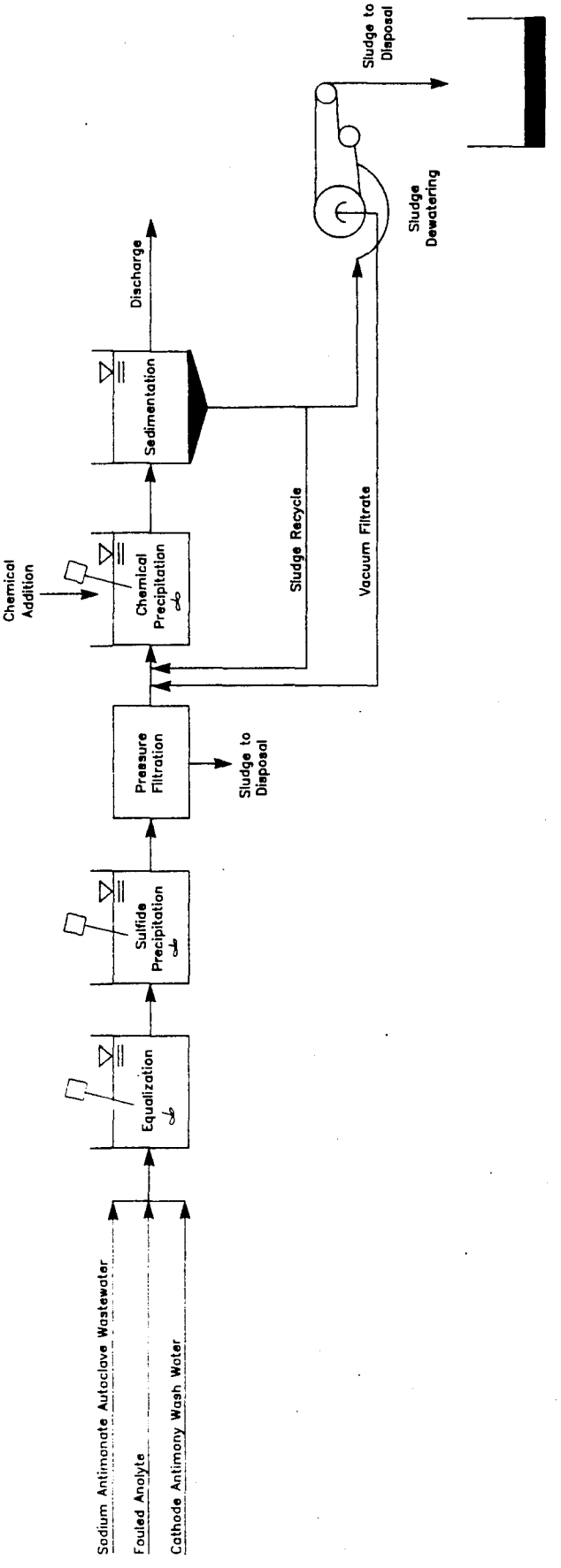

FIGURE X-1 BAT TREATMENT SCHEME FOR OPTION A

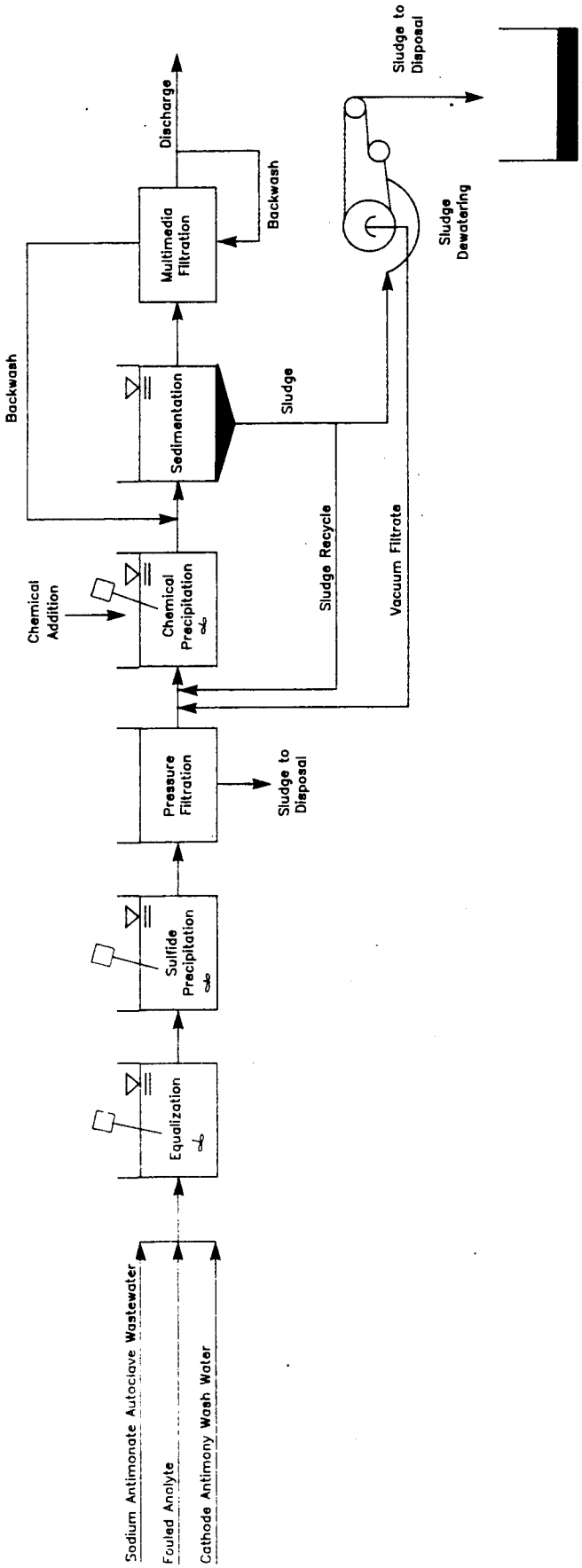

FIGURE X-2 BAT TREATMENT SCHEME FOR OPTION C

SECTION XI

NEW SOURCE PERFORMANCE STANDARDS

This section describes the technologies for treatment of wastewater from new sources and presents mass discharge standards for regulated pollutants for NSPS in the primary antimony subcategory, based on the selected treatment technology. The basis for new source performance standards (NSPS) is the best available demonstrated technology (BDT). New plants have the opportunity to design the best and most efficient production processes and wastewater treatment technologies without facing the added costs and restrictions encountered in retrofitting an existing plant. Therefore, EPA has considered the best demonstrated process changes, in-plant controls, and end-of-pipe treatment technologies which reduce pollution to the maximum extent feasible.

TECHNICAL APPROACH TO NSPS

New source performance standards are equivalent to the best available technology (BAT) selected for currently existing primary antimony plants. This result is a consequence of careful review by the Agency of a wide range of technology options for new source treatment systems. There was nothing found to indicate that the wastewater flows and characteristics of new plants would not be similar to those from existing plants, since the processes used by new sources are not expected to differ from those used at existing sources. Consequently, BAT production normalized discharge rates, which are based on the best existing practices of the subcategory, can also be applied to new sources. These rates are presented in Table XI-1 (page 2123).

Treatment technologies considered for the NSPS options are identical to the treatment technologies considered for the BAT options. These options are:

OPTION A

- Sulfide precipitation preliminary treatment
- Chemical precipitation and sedimentation

OPTION C

- Sulfide precipitation preliminary treatment
- Chemical precipitation and sedimentation
- Multimedia filtration

NSPS OPTION SELECTION - PROPOSAL

EPA proposed that the best available demonstrated technology for the primary antimony subcategory be equivalent to Option C. The wastewater flow rates for NSPS were the same as the proposed BAT flow rates. Flow reduction measures for NSPS and BAT were not considered feasible because no new demonstrated technologies existed within the subcategory that improved on present water use practices in the subcategory. Therefore, EPA concluded that flow reduction beyond the allowances proposed for BPT or BAT was unachievable, and NSPS flow rates should be equal to those for BPT and BAT.

NSPS OPTION SELECTION - PROMULGATION

EPA is promulgating best available technology for the primary antimony subcategory equivalent to Option C.

The wastewater flow rates for NSPS are the same as the BPT flow rates. The NSPS flow rates are presented in Table XI-1 (page 2123). Additional flow reduction and more stringent treatment technologies are not demonstrated or readily transferable to the primary antimony subcategory for the reasons stated at proposal.

REGULATED POLLUTANT PARAMETERS

The Agency has no reason to believe that the pollutants that will be found in treatable concentrations in processes within new sources will be any different than with existing sources. Accordingly, pollutants and pollutant parameters selected for limitation under NSPS, in accordance with the rationale of Sections VI and X, are identical to those selected for BAT. The conventional pollutant parameters TSS and pH are also selected for limitation.

NEW SOURCE PERFORMANCE STANDARDS

The NSPS discharge flows for each wastewater source are the same as the discharge rates for BAT and are shown in Table XI-1. The mass of pollutant allowed to be discharged per mass of product is based on the product of the appropriate treatable concentration (mg/l) and the production normalized wastewater discharge flows (l/kkg). The results of these calculations are the new source performance standards. These standards are presented in Table XI-2 (page 2124), in milligrams of pollutant per kilogram of product.

TABLE XI-1

NSPS WASTEWATER DISCHARGE RATES FOR THE PRIMARY ANTIMONY SUBCATEGORY

Wastewater Stream	BPT Normalized Discharge Rate (l/kkg)	(gal/ton)	Production Normalizing Parameter (PNP)
Sodium antimonate autoclave wastewater	15624	3744	Antimony contained in sodium antimonate product
Fouled Anolyte	15624	3744	Antimony metal produced by electrowinning
Cathode antimony wash water	31284	7488	Antimony metal produced by electrowinning

TABLE XI-2

NSPS FOR THE PRIMARY ANTIMONY SUBCATEGORY

a) Sodium Antimonate Autoclave Wastewater NSPS

Pollutant or pollutant property	Maximum for any one day	Maximum for monthly average
mg/kg (lb/million lbs) of antimony contained in sodium antimonate product		
*Antimony	30.150	13.440
*Arsenic	21.720	9.687
Cadmium	3.125	1.250
Copper	20.000	9.531
Lead	4.375	2.031
*Mercury	2.344	.937
Zinc	15.940	6.562
*TSS	234.400	187.500
*pH Within the range of 7.5 to 10.0 at all times		

b) Fouled Anolyte NSPS

Pollutant or pollutant property	Maximum for any one day	Maximum for monthly average
mg/kg (lb/million lbs) of antimony metal produced by electrowinning		
*Antimony	30.150	13.440
*Arsenic	21.720	9.687
Cadmium	3.125	1.250
Copper	20.000	9.531
Lead	4.375	2.031
*Mercury	2.344	.937
Zinc	15.940	6.562
*TSS	234.400	187.500
*pH Within the range of 7.5 to 10.0 at all times		

*Regulated Pollutant

TABLE XI-2 (Continued)

NSPS FOR THE PRIMARY ANTIMONY SUBCATEGORY

c) Cathode Antimony Wash Water NSPS

Pollutant or pollutant property	Maximum for any one day	Maximum for monthly average
mg/kg (lb/million lbs) of antimony metal produced by electrowinning		
*Antimony	60.310	26.870
*Arsenic	43.430	19.370
Cadmium	6.250	2.500
Copper	40.000	19.060
Lead	8.749	4.062
*Mercury	4.687	1.875
Zinc	31.870	13.120
*TSS	468.700	375.000
*pH Within the range of 7.5 to 10.0 at all times		

*Regulated Pollutant

THIS PAGE INTENTIONALLY LEFT BLANK

SECTION XII

PRETREATMENT STANDARDS

This section describes the control and treatment technologies for pretreatment of process wastewaters from new sources in the primary antimony subcategory. PSES are designed to prevent a discharge of pollutants which pass through, interfere with, are otherwise incompatible with the operation of publicly owned treatment works (POTW). The Clean Water Act requires pretreatment for pollutants, such as toxic metals, that meet POTW sludge management alternatives. New direct discharge facilities, like new direct discharge facilities, have the opportunity to incorporate the best available demonstrated technologies, including process changes, in-plant controls, and end-of-pipe treatment technologies, and to use any site selection to ensure adequate treatment system installation. Pretreatment standards are to be technology based, analogous to the best available or demonstrated technology for removal of toxic pollutants.

Pretreatment standards for regulated pollutants are presented based on the selected control and treatment technology. Pretreatment standards for existing sources (PSES) will not be promulgated for the primary antimony subcategory because there are no existing indirect dischargers in this subcategory. However, pretreatment standards for new sources (PSNS) will be promulgated.

TECHNICAL APPROACH TO PRETREATMENT

Before proposing and promulgating pretreatment standards, the Agency examines whether the pollutants discharged by the industry pass through the POTW or interfere with the POTW operation or its chosen sludge disposal practices. In determining whether pollutants pass through a well-operated POTW achieving secondary treatment, the Agency compares the percentage of a pollutant removed by POTW with the percentage removed by direct dischargers applying the best available technology economically achievable. A pollutant is deemed to pass through the POTW when the average percentage removed nationwide by well-operated POTW ,meeting secondary treatment requirements, is less than the percentage removed by direct dischargers complying with BAT effluent limitations guidelines for that pollutant. (See generally, 46 FR at 9415-16 (January 28, 1981).)

This definition of pass through satisfies two competing objectives of the Clean Water Act that standards for indirect dischargers be equivalent to standards for direct dischargers while at the same time the treatment capability and performance of the POTW be recognized and taken into account in regulating the discharge of pollutants from indirect dischargers.

The Agency compares percentage removal rather than the mass or concentration of pollutants discharged because the latter would

not take into account the mass of pollutants discharged to the POTW from non-industrial sources or the dilution of the pollutants in the POTW effluent to lower concentrations due to the addition of large amounts of non-industrial wastewater.

PRETREATMENT STANDARDS FOR NEW SOURCES

Options for pretreatment of wastewaters from new sources are based on increasing the effectiveness of end-of-pipe treatment technologies. All in-plant changes and applicable end-of-pipe treatment processes have been discussed previously in Sections X and XI. The options for PSNS, therefore, are the same as the BAT options discussed in Section X.

A description of each option is presented in Section X, while a more detailed discussion, including pollutants controlled by each treatment process is presented in Section VII of the General Development Document.

Treatment technologies considered for the PSNS options are:

OPTION A

- Sulfide precipitation preliminary treatment
- Chemical precipitation and sedimentation

OPTION C

- Sulfide precipitation preliminary treatment
- Chemical precipitation and sedimentation
- Multimedia filtration

PSNS OPTION SELECTION - PROPOSAL

EPA proposed that the pretreatment standards for new sources in the primary antimony subcategory be equivalent to Option C, chemical precipitation, sedimentation, and multimedia filtration technology. The wastewater discharge rates for PSNS were equivalent to the proposed BAT discharge rates. No flow reduction measures were considered feasible beyond the allowances proposed for BAT.

PSNS OPTION SELECTION - PROMULGATION

Option C has been selected as the regulatory approach for promulgated pretreatment standards for new sources (PSNS). Option C prevents pass-through and is equivalent to promulgated BAT treatment for direct dischargers. In addition, Option C achieves effective removal of toxic pollutants by incorporating filtration which is demonstrated by 25 plants throughout the nonferrous metals manufacturing category.
The regulatory wastewater discharge flows used as the basis for the promulgated PSNS are identical to the BAT regulatory discharge flows for each wastewater stream. The PSNS discharge rates are shown in Table XII-1 (page 2130).

REGULATED POLLUTANT PARAMETERS

Pollutants selected for limitation, in accordance with the rationale of Sections VI and X, are identical to those selected for limitation for BAT. It is necessary to promulgate PSNS to prevent the pass-through of antimony, arsenic, and mercury, which are the limited pollutants.

PRETREATMENT STANDARDS FOR NEW SOURCES

Pretreatment standards for new sources are based on the treatment effectiveness concentrations from the selected treatment technology, (Option C), and the regulatory flow allowances determined in Section X for BAT. A mass of pollutant per mass of product (mg/kg) allocation is given for each building block within the subcategory. This pollutant allocation is based on the product of the treatment effectiveness concentration from the treatment effectiveness of the technology (mg/l) and the production normalized wastewater discharge rate (l/kkg). The achievable treatment concentrations for PSNS are identical to those for BAT. PSNS are presented in Table XII-2.

TABLE XII-1

PSNS WASTEWATER DISCHARGE RATES FOR THE PRIMARY ANTIMONY SUBCATEGORY

Wastewater Stream	BPT Normalized Discharge Rate (l/kkg)	(gal/ton)	Production Normalizing Parameter (PNP)
Sodium antimonate autoclave wastewater	15624	3744	Antimony contained in sodium antimonate product
Fouled Anolyte	15624	3744	Antimony metal produced by electrowinning
Cathode antimony wash water	31284	7488	Antimony metal produced by electrowinning

TABLE XII-2

PSNS FOR THE PRIMARY ANTIMONY SUBCATEGORY

a) Sodium Antimonate Autoclave Wastewater PSNS

Pollutant or pollutant property	Maximum for any one day	Maximum for monthly average
mg/kg (lb/million lbs) of antimony contained in sodium antimonate product		
*Antimony	30.150	13.440
*Arsenic	21.720	9.687
Cadmium	3.125	1.250
Copper	20.000	9.531
Lead	4.375	2.031
*Mercury	2.344	.937
Zinc	15.940	6.562

b) Fouled Anolyte PSNS

Pollutant or pollutant property	Maximum for any one day	Maximum for monthly average
mg/kg (lb/million lbs) of antimony metal produced by electrowinning		
*Antimony	30.150	13.440
*Arsenic	21.720	9.687
Cadmium	3.125	1.250
Copper	20.000	9.531
Lead	4.375	2.031
*Mercury	2.344	.937
Zinc	15.940	6.562

*Regulated Pollutant

TABLE XII-2 (Continued)

PSNS FOR THE PRIMARY ANTIMONY SUBCATEGORY

c) Cathode Antimony Wash Water PSNS

Pollutant or pollutant property	Maximum for any one day	Maximum for monthly average
mg/kg (lb/million lbs) of antimony metal produced by electrowinning		
*Antimony	60.310	26.870
*Arsenic	43.430	19.370
Cadmium	6.250	2.500
Copper	40.000	19.060
Lead	8.749	4.062
*Mercury	4.687	1.875
Zinc	31.870	13.120

*Regulated Pollutant

SECTION XIII

BEST CONVENTIONAL POLLUTANT CONTROL TECHNOLOGY

EPA is not promulgating best conventional pollutant control technology (BCT) for the primary antimony subcategory at this time.