DEVELOPMENT DOCUMENT

for

PROPOSED EFFLUENT LIMITATIONS GUIDELINES AND NEW SOURCE PERFORMANCE STANDARDS

FOR THE

ORGANIC CHEMICALS AND PLASTICS AND SYNTHETIC FIBERS INDUSTRY

VOLUME II (BAT)

Anne M. Burford
Administrator

Frederic A. Eidsness, Jr.
Assistant Administrator for Water

Steven Schatzow, Director
Office of Water Regulations and Standards

Jeffery D. Denit, Director
Effluent Guidelines Division

Devereaux Barnes, Acting Branch Chief
Organic Chemicals Branch

Elwood H. Forsht
Project Officer

FEBRUARY 1983

EFFLUENT GUIDELINES DIVISION
OFFICE OF WATER REGULATIONS AND STANDARDS
U.S. ENVIRONMENTAL PROTECTION AGENCY
WASHINGTON, DC 20460

NOTICE MAR 31 1983

On February 28, 1983, EPA proposed effluent limitations guidelines and standards for the organic chemicals and plastics and synthetic fibers (OCPSF) point source category. The Federal Register notice of this proposal was printed on March 21, 1983 (48 FR 11828 to 11867).

Information received by the Agency after proposal indicates that the total OCPSF industry estimated annual discharges of toxic pollutants are too high. The Agency will be reevaluating these estimates when additional information becomes available prior to promulgation of a final regulation. In the interim, the Agency advises that there should be no reliance on the annual total toxic pollutant discharge estimates presented in the Federal Register notice, the February 1983 OCPSF Development Document, and February 10, 1983 OCPSF Regulatory Impact Analysis.

I

VOLUME II (BAT)

TABLE OF CONTENTS

TABLE OF CONTENTS
(continued)

TABLE OF CONTENTS
(continued)

TABLE OF CONTENTS
(continued)

TABLE OF CONTENTS
(continued)

TABLE OF CONTENTS
(continued)

TABLE OF CONTENTS
(concluded)

LIST OF TABLES

LIST OF TABLES
(continued)

LIST OF TABLES
(continued)

LIST OF TABLES
(concluded)

LIST OF FIGURES

LIST OF FIGURES
(continued)

SECTION I

EXECUTIVE SUMMARY

This document describes the technical development of EPA's proposed BAT, NSPS, PSES and PSNS effluent limitations guidelines. This Section summarizes the document and presents the proposal limitations.

SUMMARY

The major underlying legislative authority for water pollution control programs is the Federal Water Pollution Control Act Amendments of 1972 (33 U.S.C. §§1251 et seq.). Substantial revisions were made in 1977 with passage of the Clean Water Act (P.L. 95-217), which resulted in the incorporation into the Act of major provisions of the 1976 Consent Decree, an agreement reached by the Agency and environmental groups. The provisions of the Clean Water Act and the Consent Decree (as modified in 1979), require EPA to develop and issue best available technology (BAT), best conventional technology (BCT), and best practicable technology (BPT) effluent limitations guidelines, pretreatment standards for existing sources (PSES) and for new sources (PSNS), and new source performance standards (NSPS) for 34 major industries, including the Organic Chemicals and Plastics/Synthetic Fibers (OCPSF) Industries, covering 126 toxic pollutants. Under a court order filed on October 26, 1982, EPA must promulgate the final regulations by March 1984.

Section II of this document summarizes the methodology used by the Agency in developing effluent limitations guidelines and standards for the Organic Chemicals and Plastics/Synthetic Fibers (OCPSF) Industries. To ensure sound technical development of effluent guidelines, the Agency has had to collect and evaluate substantial amounts of data on these industries. The surveys used to gather data on the industry have included:

- Collection of historical data on production and treatment of wastewaters from specific plants within the industries under the authority of Section 308 of the FWPCA.

- Sampling and analysis programs at selected industry plants to characterize specific waste streams which are discharged into both aquatic environments and POTWs.

- Treatability studies on the industries' wastewaters using specific physical and biological treatment processes.

The specific data collection efforts that EPA completed in developing the proposed regulations for the OCPSF Industries are summarized in Table II-1 of Section II.

The OCPSF Industries are large, diverse and complex industries. The industries include approximately 1,200 facilities which are primary producers of products under the OCPSF SIC groups; the total number of plants may be as high as 2,100 if secondary producers are included. Over 25,000 different organic chemicals, plastics, and synthetic fibers are manufactured by plants in the industries, although only 1,200 products are produced in excess of 1,000 pounds per year. Within the industries, substantial variation is observed in the selection of chemical processes used to synthesize products, in the product mix, and in the method of manufacture (i.e., batch or continuous operations). Sales for 1980 OCPSF primary producers were reported to be 80 billion dollars.

The majority of OCPSF plants are located in coastal regions or on waterways near sources of raw materials or transportation centers. The greatest number of plants in the industries are 10 to 15 years old, and over 70 percent of the plants are less than 25 years old. A detailed description of the OCPSF Industries is presented in Section III, which includes industry profiles based on product line, product sales, geographic distribution, facility size, facility age, and process chemistry.

The Agency considered subcategorization of the OCPSF Industries based on: engineering aspects of control technologies (treatability); facility size (as measured by plant production and/or sales); geographical location; age of equipment and facilities; cost of achieving effluent reduction; non-water quality environmental impacts; and processes employed and process changes. However, these factors failed to distinquish meaningfully among industry plants.

The Agency is proposing that the plants in the OCPSF industry category be divided into two subcategories: plants that manufacture plastics and synthetic fibers only (Plastics-Only plants); and plants that manufacture organic chemicals only or both plastics materials and organic chemicals (Not Plastics-Only plants). This subcategorization scheme is derived primarily from an engineering analysis of priority pollutants detected or likely to be present in the OCPSF Industries wastewaters. This subcategorization scheme is also supported by a statistical analysis of raw wastewater data from the Phase I and Phase II Screening Studies.

The Agency further sought to develop a BAT subcategorization scheme similar to the BPT proposed subcategorization. The Agency believes that two substantially different subcategorization schemes for BPT and BAT would complicate the process of implementing and applying both sets of effluent regulations at a specific plant. Although four subcategories are proposed under the BPT effluent limitatons (see Volume I), the scheme is compatible with the two subcategories proposed under the BAT limitations. Both BAT and BPT have a Plastics-Only subcategory. While BPT has an Oxidation subcategory, Type I subcategory, and Other Discharge subcategory, these three subcategories are incorporated into the Not Plastics-Only subcategory of BAT.

The OCPSF Industries use large amounts of water in process operations. Noncontact cooling water comprises over 80 percent of the total water used in the OCPSF Industries. Direct process contact water, the primary source of

water pollution, accounts for only about ten percent of total industry water consumption.

Typically, Not Plastics-Only plants use more water than do Plastics-Only plants. In both subcategories, direct discharge plants tend to use more water than do indirect discharge plants or plants that discharge by other methods (sometimes referred to as "zero" dischargers). About 80 percent of OCPSF plants report some recirculation or reuse of water. However, less than ten percent of the plants in the OCPSF Industries eliminate discharge of process contact wastewaters to surface water bodies or POTWs through recycling. Various practices and technologies available for water conservation and recycling are discussed in Section V.

A major task for the Agency was to develop data characterizing the presence (or absence) of 129 priority pollutants in raw and treated wastewaters of the OCPSF Industries. EPA has collected wastewater data generated by individual plants within these industries and has performed extensive sampling and analysis of individual process wastewaters. An adjunct to these data collection efforts was the qualitative evaluation of which priority pollutants would be expected in wastewaters, from consideration of the starting materials and the chemical reactions employed. A systematic method for applying product/process considerations to the prediction of priority pollutants is presented in Section V.

To decide which pollutants merit regulation and to evaluate which technologies effectively reduce discharge of these pollutants, data characterizing the raw wastewaters were collected and evaluated. The studies which produced significant data on raw wastewater characteristics include the 308 Surveys, the Screening Study Phases I and II, the Verification Study, and the CMA Five-Plant Study (see Sections II and V and Appendix C).

The Agency's wastewater data collection efforts yielded data of mixed quality on the concentrations of priority pollutants in product/process effluents and wastewater treatment influents and effluents at over 170 OCPSF manufacturing plants. EPA reviewed these data and concluded that the edited data from the Verification Phase and CMA Five-Plant studies were of sufficient quality to use to develop numerical effluent limits, while data from Phases I and II of the Screening Study were appropriate for deciding which pollutants discharged by OCPSF Industries are of national concern and for performing the subcategorization principal component analysis. Analytical and QA/QC methods used to generate and to review the study data are discussed in detail in Appendix C to this report.

The waste loading data from the Verification and CMA Five-Plant studies for Plastics-Only plants and Not Plastics-Only plants are summarized in Section V, Tables V-9 and V-10.

In the development of BAT and New Source Performance Standards (NSPS) regulations, EPA considered for regulation specific nonconventional pollutants and all of the 129 priority pollutants. The Agency has chosen to defer regulation of nonconventional pollutants and to exclude from regulation the 18 pesticides which are priority pollutants. The remaining 108 priority pollutants, each detected in at least 42 percent of the plants sampled in the

Screening (Phases I and II), Verification and CMA studies, were candidates for BAT and NSPS regulation.

Pretreatment Standards for Existing Sources (PSES) and Pretreatment Standards for New Sources (PSNS) for indirect dischargers need only address those pollutants which upset, inhibit, pass-through, or contaminate sludges at POTWs. In selecting pollutants to regulate for pretreatment standards, the Agency has only addressed those 108 priority pollutants that the Agency considered as candidates for BAT regulation. A pollutant is deemed to pass through a POTW if the average percent removal achieved by well-operated POTWs nationwide (as reflected in the 50 POTW Study) is less than the percent removal achieved by direct dischargers complying with the proposed BAT effluent limitations guidelines for that pollutant. Pollutants shown not to pass through were eliminated from consideration for regulation under PSES and PSNS. Where adequate removal data were not available for a particular pollutant, the pollutant was included for regulation under PSES and PSNS. Using these pass-through criteria, the Agency selected six pollutants in the Plastics-Only subcategory and 29 pollutants in the Not Plastics-Only subcategory for potential regulation under PSES and PSNS. These pollutants are listed in Table VI-5.

A variety of physical, chemical, and biological treatment processes are in use or available for OCPSF manufacturing plants to control and treat both wastewater pollutants and the solid residues (sludges) produced by treating the wastewaters. These control and treatment technologies include: in-plant source controls (e.g., process modification, solvent recovery, and water reuse); in-plant treatment technologies; end-of-pipe treatment and disposal technologies; and sludge treatment and disposal technologies. The predominant end-of-pipe wastewater treatment technologies employed by the industry are equalization, neutralization, sedimentation, and biological treatment, preceded by a variety of in-plant controls and physical/chemical treatment (e.g., steam stripping and carbon adsorption) of specific product/process waste streams. The specific technologies and their application to the industry in general are discussed in Section VII.

EPA sponsored several treatability studies to develop data on the removal of individual priority pollutants by candidate BAT technologies. These studies are described in Section VII and Appendix E to this report.

Faced with the task of evaluating alternative sets of priority pollutant effluent limitations for a highly complex and diverse industry, the Agency developed a computer model capable of estimating the performance, non-water quality environmental impacts, and the construction and operating costs of various combinations of available treatment technologies adequate to meet each candidate set of effluent limitations. A description of the computer model is presented in Section VIII and Appendix K.

The Agency estimated the costs to the OCPSF Industries of complying with the proposed BAT and PSES regulations from estimated costs generated by the model for treating wastewaters from 55 Generalized Plant Configurations (GPCs). Each GPC is a group of organic and plastic product/processes that represents an entire manufacturing plant or major portions of plants contained in the 308 Database. A discussion of the methods used to estimate costs from the Model GPCs is presented in Section VIII.

Sections 304(b) and 306 of the Clean Water Act require the Agency to consider the non-water quality impacts of these proposed regulations. Section VIII presents the factors considered by the Agency in evaluating the impacts of compliance with this regulation on energy consumption, air pollution, solid waste generation, and noise generation.

CONCLUSIONS

EPA considered alternative approaches in developing BAT effluent limitations. Since significantly different combinations and concentrations of priority pollutants are found at different OCPSF plants, no single pollutant control and treatment technology is adequate to address the entire industry or each subcategory; the BAT technologies are plant-specific. EPA is proposing BAT effluent concentration limitations for this industry that reflect the performance of existing well-designed and well-operated OCPSF treatment plants in the Agency's Verification and CMA study database. Derivation of the limitations is detailed in Section IX and Appendix F. Maximum daily and four-day average limitations have been calculated for each regulated pollutant. Effluent limitations have been proposed for 10 pollutants for the Plastics-Only subcategory and 44 pollutants for the Not Plastics-Only subcategory; these limitations are listed in Tables I-1 and I-2.

Limitations are not proposed for pollutants for which sampling data were insufficient. Limitations are not proposed for pollutants in classes where no variability factor could be estimated from the CMA data or for pollutants where no long-term median could be estimated from the CMA and Verification data. The Agency has been unable to develop limitations for 60 of the other pollutants listed in Table VI-2 because of inadequate data. EPA plans to assess the need for effluent limitations for these pollutants during the additional data gathering and field sampling studies planned between proposal and promulgation.

EPA is proposing NSPS limitations that are identical to those proposed for BPT for conventional pollutants (contained in Volume I) and BAT for priority toxic pollutants. The Agency did not estimate the future cost to the OCPSF Industries of these NSPS limitations, since they will not generate incremental costs or economic impacts.

The Agency is proposing for PSES and PSNS effluent limitations that have been derived from performance data for end-of-pipe technologies, since the Agency does not currently have sufficient performance data on in-plant controls alone. The proposed PSES and PSNS effluent limitations address 21 of the 35 priority pollutants selected as candidates for PSES and PSNS regulation. The pollutants and the proposed effluent limitations are listed in Table I-3.

TABLE I-1

BAT EFFLUENT LIMITATIONS (ug/l)
PLASTICS-ONLY PLANTS

	POLLUTANT	FOUR-DAY LIMITATION*	DAILY LIMITATION
(65)	Phenol	--	50
(66)	Bis(2-ethylhexyl)phthalate	50	100
(118)	Cadmium	20	30
(119)	Chromium	60	110
(120)	Copper	60	120
(121)	Cyanide	20	50
(122)	Lead	20	40
(2)	Acrolein	--	50
(38)	Ethylbenzene	--	50
(88)	Vinyl chloride	--	50

* No four-day average limitation was given if the daily limitation was 50 ug/liter.

TABLE I-2

BAT EFFLUENT LIMITATIONS (ug/l)
NOT PLASTICS-ONLY PLANTS

	POLLUTANT	FOUR-DAY LIMITATION*	DAILY LIMITATION
(21)	2,4,6-trichlorophenol	100	175
(24)	2-chlorophenol	50	75
(31)	2,4-dichlorophenol	100	200
(34)	2,4-dimethylphenol	--	50
(57)	2-nitrophenol	75	100
(58)	4-nitrophenol	325	500
(59)	2,4-dinitrophenol	100	150
(64)	Pentachlorophenol	50	100
(65)	Phenol	--	50
(1)	Acenaphthene	--	50
(8)	1,2,4-trichlorobenzene	125	225
(25)	1,2-dichlorobenzene	125	250
(54)	Isophorone	--	50
(66)	Bis(2-ethylhexyl)phthalate	150	350
(68)	Di-n-butyl phthalate	150	300

TABLE I-2 (continued)

POLLUTANT	FOUR-DAY LIMITATION*	DAILY LIMITATION
(70) Diethyl Phthalate	125	275
(71) Dimethyl phthalate	175	375
(77) Acenaphthylene	--	50
(80) Fluorene	--	50
(81) Phenanthrene	--	50
(114) Antimony	370	780
(118) Cadmium	40	70
(119) Chromium	90	190
(120) Copper	70	150
(121) Cyanide	180	410
(122) Lead	40	70
(123) Mercury	50	90
(128) Zinc	100	210
(4) Benzene	75	125
(6) Carbon tetrachloride	--	50
(10) 1,2-dichloroethane	100	150

TABLE I-2 (concluded)

	POLLUTANT	FOUR-DAY LIMITATION*	DAILY LIMITATION
(11)	1,1,1-trichloroethane	--	50
(13)	1,1-dichloroethane	125	225
(14)	1,1,2-trichloroethane	50	75
(16)	Chloroethane	--	50
(23)	Chloroform	50	75
(29)	1,1-dichloroethylene	75	125
(38)	Ethylbenzene	150	275
(44)	Methylene chloride	--	50
(45)	Methyl chloride	--	50
(46)	Methyl bromide	--	50
(48)	Dichlorobromomethane	--	50
(86)	Toluene	125	225
(87)	Trichloroethylene	50	75

* No four-day average limitation was given if the daily limitation was 50 ug/liter.

TABLE I-3

PRETREATMENT STANDARDS FOR
EXISTING AND NEW SOURCES

POLLUTANT NAME	DAILY MAXIMUM (ppb)	FOUR-DAY AVERAGE (ppb)
Plastics-Only Subcategory		
Acrolein	50	--
Cyanide	50	20
Lead	40	20
Vinyl Chloride	50	--
Not Plastics-Only Subcategory		
2,4-Dimethylphenol	50	--
2,4-Dichlorophenol	200	100
2,4,6-Trichlorophenol	175	100
2-Chlorophenol	75	50
2-Nitrophenol	100	75
2,4-Dinitrophenol	150	100
4-Nitrophenol	500	325
Dimethyl Phthalate	375	175
Phenanthrene	50	--
Fluorene	50	--
Acenaphthylene	50	--
Isophorone	50	--
Methyl Bromide	50	--
Chloroethane	50	--
1,2-Dichloroethane	150	100
Total Chromium	190	90
Total Mercury	90	50

SECTION II

INTRODUCTION

LEGAL AUTHORITY

Background

The major underlying legislative authority for water pollution control programs is the Federal Water Pollution Control Act (FWPCA), originally enacted in 1948. Current federal efforts to control water pollution emanate from the Federal Water Pollution Control Act Amendments of 1972 (33 U.S.C. §§1251 et seq.), which represents a comprehensive re-write of the original Act. Further and substantial revisions were made in 1977 with passage of the Clean Water Act (P.L. 95-217), although the structure established in 1972 was not changed.

Prior to 1948, there were limited federal efforts to address problems associated with water pollution (e.g., the Public Health Service Act of 1912 and the Oil Pollution Control Act of 1924). However, it was not until passage of the FWPCA that there was any comprehensive legislation directed specifically at water pollution control. This Act had the following major purposes:

- Encouraged state efforts to control water pollution.
- Supported water pollution related research.
- Authorized the Department of Justice to bring suits to require entities to cease pollution of interstate waters after notice and hearing and State consent.
- Established a federal advisory board for water pollution.
- Authorized low-interest loans for construction of sewer and waste facilities.

From 1948 until passage of the 1972 Amendments, the FWPCA was amended on numerous occasions. (See: Public Law No. 660, 84th Congress, 2d Session (1956); Public Law No. 88, 87th Congress, 1st Session (1961), Public Law No. 234, 89th Congress, 1st Session (1965), Public Law No. 753, 89th Congress, 2d Session (1966), Public Law No. 224, 91st Congress, 2d Session (1970)). Significant amendments occurred with the passage of the Water Quality Act of 1965. This Act required States to adopt water quality standards for interstate waters by June 30, 1967 and submit them for approval to the Secretary of the Interior (whose duties under the Act were later transferrred to the Administrator of the Environmental Protection Agency). If no standards were submitted by a State, or the standards submitted were not approved, or the Secretary or an affected State requested a revision in standards, a

complex procedure was established to resolve the dispute. Water quality standards were to include water quality criteria applicable to interstate waters and a plan for the implementation and enforcement of such criteria. By 1972, with few exceptions all States had adopted water quality standards.

Federal Water Pollution Control Act Amendments of 1972

The Federal Water Pollution Control Act Amendments of 1972 (P.L. 92-500) required the Environmental Protection Agency, in cooperation with other Federal agencies, State agencies, interstate agencies, municipalities, and industries, to "prepare or develop comprehensive programs for preventing, reducing, or eliminating the pollution of the navigable waters and ground waters and improving the sanitary condition of surface and underground waters" (Section 102(a)). The purposes of the law were to be achieved largely through the control of industrial and municipal discharges. These Amendments required EPA to develop technology-based effluent limitations for conventional pollutants (Section 301), and, in certain cases, water quality related effluent limitations (Section 302). By July 1, 1977, existing industrial dischargers were required to achieve effluent limitations using the best practicable control technology currently available (BPT) (Section 301(b)(1)(A)). By July 1, 1983, these dischargers were required to achieve effluent limitations using the best available technology economically achievable (BAT) (Section 301(b)(2)(A)). Industrial direct dischargers operating new plants were required to comply with new source performance standards (NSPS) (Section 306); both new and existing dischargers to publicly owned treatment works (POTWs) were subject to pretreatment standards (Section 307). The Amendments also created a National Pollutant Discharge Elimination System (NPDES) whereby EPA was authorized to issue permits for the discharge of pollutants by individual dischargers (Section 402).

While the NPDES permit process envisioned the issuance of permits on a case-by-case basis, control requirements were to be primarily based upon promulgated regulations. The Amendments required EPA to promulgate regulations setting forth effluent limitation guidelines. The law further provided regulation of categories of point sources that discharge specific toxic pollutants (Section 307).

The Amendments specified 27 industrial point source categories for which EPA was to develop new source performance standards for effluents (Section 306). EPA began its regulatory activities by establishing effluent limitations guidelines as well as new source performance and pretreatment standards for the industrial categories identified in this legislation, which included the Organic Chemicals Manufacturing Industry and the Plastics and Synthetic Fibers Materials Manufacturing Industry.

Initial EPA Efforts to Develop Regulations for the Organic Chemicals and Plastics/Synthetic Fibers Industries

Initial efforts to develop regulations for the Organic Chemicals Industry and the Plastics and Synthetic Fibers Industry began in 1973. Under a two-phase program, conventional pollutant parameters of the Organic Chemicals Manufacturing Industry were regulated separately from those of the Plastics and Synthetic Fibers Industry. Selected nonconventional toxic pollutant

parameters such as chemical oxygen demand, zinc, copper, chromium, cyanide, phenolic compounds, and fluorides were regulated for at least one or more subcategories.

Phase I regulations for the Organic Chemicals Manufacturing Industry were promulgated under court order on April 25, 1974 (39 FR 14676). These regulations established effluent limitations guidelines for existing sources and pretreatment and performance standards for new sources for 40 of 260 identified product/process segments. Phase II regulations, promulgated under court order on January 5, 1976 (41 FR 902), established effluent limitations guidelines and pretreatment and performance standards for an additional 27 product/process segments.

Phase I regulations for the Plastics and Synthetic Fibers Industry were promulgated under court order on April 5, 1974 (39 FR 12502). They established effluent limitations guidelines and pretreatment and performance standards for 13 of the 21 identified plastic/synthetic fibers subcategories. The Phase II regulations, promulgated on January 23, 1975 (40 FR 3730), established guidelines and standards for the remaining eight subcategories.

When the Phase II regulations for the Organic Chemicals Manufacturing Industry were published, litigation challenging the Phase I regulations was pending. On February 10, 1976 (a month after publication of the Phase II regulations), the Court ordered EPA to withdraw, reconsider, and repromulgate both the Phase I and Phase II regulations, Union Carbide v. Train, 541 F.2d 1171 (4th Cir. 1976). In accordance with this ruling, on April 1, 1976, EPA published a notice revoking all of the Phase I and II regulations except those relating to the manufacture of butadiene (41 FR 13936).

During the same time period, existing regulations (except those concerning pH limitations) for the Plastics and Synthetic Fibers Industry were also being challenged in court. On March 10, 1976, the Phase I plastics and synthetics fibers guidelines and standards were remanded to EPA for reconsideration. On August 4, 1976, EPA published a notice (41 FR 32587) revoking all Phase I guidelines and standards except the unchallenged pH limitations. Since the Phase II guidelines and standards were based on data similar to the Phase I regulations which the court found to be defective, the Agency also revoked these Phase II regulations.

Initial EPA Efforts to Develop Effluent Standards for Individual Toxic Pollutants

Section 307(a) of the FWPCA, as amended, required that EPA develop effluent standards for individual toxic pollutants within ninety days. Because of the lack of available data, EPA failed to list any toxic pollutants by the initial deadline; as a result, the Natural Resources Defense Council (NRDC) filed a lawsuit to force the Agency to fulfill its statutory obligations. This lawsuit resulted in a June 1973 Consent Decree that set a deadline for EPA to publish a list of the toxic pollutants which would be regulated. On September 7, 1973, EPA published a list of nine toxic pollutants for which it intended to establish effluent guidelines: aldrin/dieldrin, benzidine, cadmium, cyanide, DDT (DDE, DDD), endrin, polychlorinated biphenyls (PCBs), mercury, and toxaphene.

The NRDC filed a new action against EPA, alleging that the toxic pollutant list was illegally narrow and that EPA used unpublished criteria in selecting the nine compounds. This lawsuit was dismissed by the U.S. District Court on May 23, 1974. The Court ruled that the Administrator had acted within his discretion in listing only nine compounds and that the selection criteria used were not unreasonable. The Court further asserted that Congress did not expect the Administrator to regulate all toxic pollutants at one time and that narrowing the list to a feasible number of compounds was reasonable.

This dismissal was appealed by NRDC. The D.C. Court of Appeals reversed the lower court's decision on September 15, 1975 (NRDC v. Train, 519 F.2d 287) finding that NRDC had substantially shown in District Court that EPA had not filed the entire administrative record with the Court and the Court was in error when it ruled on the basis of a partial administrative record. The case was remanded to the District Court for a decision on the entire record, which it instructed the Administrator to provide.

While the length of the list was being challenged, on December 27, 1973, EPA did propose effluent standards for the nine toxic pollutants identified on the original list (38 FR 35388). EPA then held hearings on the proposal in April and May of 1974. The Agency interpreted the FWPCA to require a formal hearing and findings based on the hearing record, which placed the burden of proof on EPA to justify the proposed regulations. The proposed standards were vigorously attacked by both industry and environmental groups; at the close of the hearing, EPA concluded that the record would not support the standards as proposed and withdrew them. Subsequently, the Environmental Defense Fund (EDF) in conjunction with NRDC filed a suit alleging that EPA had failed to perform a nondiscretionary duty by not promulgating final standards.

Recognizing that these lawsuits needed to be settled so that the Agency could devote its efforts to developing its regulatory program, EPA entered into a Settlement Agreement with both EDF and NRDC which was approved in a Consent Decree issued by the U. S. District Court for the District of Columbia on June 9, 1976, Natural Resources Defense Council, et al. v. Train, 8 E.R.C. 2120 (D.D.C. 1976). In the Agreement, EPA proposed a new regulatory strategy for toxic pollutants -- an industry-by-industry approach rather than a pollutant-by-pollutant approach. EPA was to develop and issue BAT effluent limitation guidelines, pretreatment standards, and new source performance standards for 21 major industries (including the Organic Chemicals and Plastics/Synthetic Fibers - OCPSF - Industry) covering 65 toxic pollutants or group of pollutants by December 31, 1979. Under this strategy, section 307(a) was used to issue standards for six of the nine toxic pollutants originally listed but never regulated. Thereafter, the use of section 307(a) was limited to cases where control beyond BAT was needed.

By early 1976, the Agency had uniform national standards that controlled the discharge of conventional and toxic pollutants for only one portion of the OCPSF Industries -- butadiene manufacturing. Pursuant to the Consent Decree for toxic pollutants, effluent standards were proposed under Section 307(a) for six of the nine originally listed toxic pollutants (aldrin/dieldrin, DDT, endrin, toxaphene, benzidine, and PCBs) on a staggered schedule through July 23, 1976; the formal rulemaking hearings with public comments were held during the summer and fall of that year. Subsequently, standards were promulgated

for the four pesticides and benzidine on January 12, 1977 and for PCBs on February 2, 1977. Pretreatment standards for eight of the 21 industrial categories were also developed and published by July 1977.

Clean Water Act of 1977

On December 27, 1977, the President signed into law amendments to the FWPCA, known as the Clean Water Act of 1977 (P.L. 95-217). Major provisions of the 1976 Consent Decree were incorporated into the FWPCA. BAT levels of control were required for all toxic pollutants referred to in Table 1 of Committee Print No. 95-30 of the House Committee on Public Works and Transportation (identical to the list of 65 classes of toxic pollutants listed in the Consent Decree). For toxic pollutants subsequently added to this list, BAT regulations were to be promulgated within three years of listing. Section 307(a) was also amended to reflect the Consent Decree. The 65 classes of pollutants in the Committee Print were listed as toxic pollutants. BAT was established as the minimum level of control for all toxic pollutants listed under Section 307. (More stringent effluent standards are still available for use at the discretion of the Administrator in cases of extreme hazard.) To strengthen the toxics control program, Congress added a new section 304(e) to the Act, authorizing the Administrator to prescribe what have been termed "best management practices" (BMPs) to prevent the release of toxic pollutants through plant site runoff, spillage or leaks, sludge or waste disposal, and drainage from raw material storage associated with, or ancillary to, the manufacturing or treatment process.

The Clean Water Act also significantly revised the framework of the Agency's technology-based pollution abatement efforts. Distinctions among pollutants were made and regulations requiring different technical and economic bases were incorporated into the Act. The original BPT and BAT regulations were modified by a new regulatory concept, Best Conventional Technology (BCT), and the universe of pollutants previously considered was subdivided into three categories: conventional, toxic, and nonconventional. Conventional pollutants were defined as biochemical oxygen demand (BOD), total suspended solids (TSS), fecal coliform, pH, and oil and grease (O&G). Toxic pollutants were defined as those substances (compounds) included in the Section 307(a) list. Nonconventional pollutants were defined as all other pollutants. Toxic and conventional pollutants were to be subject to BAT and BCT effluent limitations, respectively, no later than July 1, 1984. The factors to be considered in assessing BCT include: (1) the reasonableness of the relationship between the costs and the benefits of reducing the effluent wasteload; and (2) the comparison of the cost and level of reduction for an industrial discharge with the cost and level of reduction of similar pollutants for a typical POTW (Section 304(b)(4)(B)).

Subsequent EPA Developments and Regulations

After entering into the Consent Decree (major provisions of which were subsequently incorporated into the Clean Water Act), EPA faced the major task of establishing comprehensive technology-based standards for the 21 industries and 65 classes of priority pollutants. Shortly after the publication of the Consent Decree, EPA began to collect the technical and economic information necessary to establish toxic pollutant effluent standards. EPA used its

authority under Section 308 of the Clean Water Act to gather information directly from manufacturing facilities (see Guidelines Development Methodology, the second part of this chapter). Recognizing that some of the listed substances represented classes of compounds, EPA refined the list by specifically listing some members of the classes and excluding others, producing a list of 129 priority pollutants. EPA has since eliminated three pollutants from the original list: bis(chloromethyl) ether, dichlorodifluoromethane, and trichlorofluoremethane. EPA is developing effluent limitation guidelines for the 126 priority pollutants currently on its list.

This effort did not meet its original deadlines, and the NRDC and others filed a motion with the District Court on September 26, 1978 requesting that EPA show cause why it should not be held in contempt of court for failing to comply with the timetable of the Consent Decree. This action resulted in a modification of the Consent Decree which was approved by the Court on March 9, 1979 (NRDC et al., vs. Costle, 12 ERC 1833). The modifications outlined by the Court included:

- Expansion and refinement of the original 21 Point Source Categories into 34 Point Source Categories.

- Extension of deadlines to reflect the Clean Water Act amendments requiring the proposal and promulgation of technology-based effluent limitations, standards of performance, pretreatment standards, and water quality standards.

- Extension of deadlines for compliance with BAT until July 1, 1984.

- Broadening of EPA discretion in excluding certain pollutants from regulation.

- Granting EPA additional time to develop pretreatment standards for pollutants that are "incompatible" with the operation of POTWs. These pollutants may be in addition to the 65 classes specifically mentioned in the Consent Decree and referred to in the Clean Water Act.

- Detailed specification of the steps EPA must take to determine when effluent limitations more stringent than the technology-based limitations are necessary to protect aquatic life and human health.

Recent Developments and Current Deadlines

In 1981, NRDC sued EPA in the D. C. District Court for not meeting the second set of deadlines for technology-based regulations which had been set in the 1979 modification of the Consent Decree. On April 7, 1982, District Court Judge Flannery ordered EPA to propose all regulations within six months and promulgate all regulations within six additional months. EPA asked that the

deadlines for the regulations for the Organic Chemicals and Plastics and Synthetic Fibers Industries be extended. After considering the Agency's request, the Judge filed an order on October 26, 1982, requiring EPA to propose the regulations on this industry by February 1983 and promulgate the final regulation by March 1984.

GUIDELINES DEVELOPMENT METHODOLOGY

General

Developing effluent limitations guidelines and standards for the Organic Chemicals and Plastics/Synthetic Fibers (OCPSF) Industries has required that the Agency collect and evaluate substantial amounts of data on these industries. Major tasks undertaken to ensure sound technical development of effluent guidelines have included:

- Definition of these industries in terms of product coverage.

- Collection and evaluation of industry data regarding product/processes used, water usage, quantity and quality of wastewater generated, and the performance and cost of the pollutant control technologies (both in-plant and end-of-pipe) currently in place.

- Collection and assessment of information concerning innovative pollutant control technologies which might be used in these industries.

- Measurement of pollutant concentrations present in industry wastewaters (including selection and refinement of appropriate analytical techniques).

- Examination of the industry to determine whether differences in raw materials, product/processes, final products, equipment, age and size of plants, water usage, wastewater constituents, or other factors justify developing separate effluent limitations and standards for different segments (subcategories) of the industry.

- Selection of pollutants to be addressed by BAT regulations by considering raw wastewater data in light of the process chemistry/engineering practiced by these industries together with pollutant detectability, frequency of occurrence, environmental significance, treatability limits, and (for indirect dischargers) removal and impacts of individual pollutants at POTWs.

- Evaluation of the performance and costs of the pollutant control technologies available to the industry for meeting each of several candidate effluent limitations.

- Evaluation of the non-water quality environmental impacts of the pollutant control technologies, including air quality impacts, solid waste generation, water consumption and energy consumption.

- Selection of specific control and treatment technologies as the bases for BAT, NSPS, PSES and PSNS effluent limitation regulations by comparing pollutant reduction, other environmental impacts, cost effectiveness, and the economic impact on the industry of each alternative technology.

Descriptions of the details and results of these tasks make up the bulk of the remaining chapters of this Development Document. The surveys used to gather the data on the industry are described below.

Definition and Surveys of the Industry

The Consent Decree (discussed under Legal Authority, above) requires that effluent limitations and guidelines, including pretreatment standards, extend to 95% of the point sources within the Organic Chemicals and Plastics/Synthetic Fibers Industries. EPA's first tasks were to determine what manufacturing facilities (and SIC codes) are included in the industry, and then to collect sufficient technical and economic information to establish technically sound toxic pollutant effluent standards. After determining what plants must be covered by the regulations (see Section III), EPA collected historical data from specific plants within these industries on their production and treatment of wastewater as authorized by Section 308 of the FWPCA. EPA then funded and directed several sampling and analysis programs at selected industry plants, characterizing specific waste streams that introduced priority pollutants into both aquatic environments and Publically Owned Treatment Works (POTW).

The Agency also executed several studies on the treatment of industry wastewaters using specific treatment processes. The various data collection studies EPA completed in developing regulations for this industry are listed in TABLE II-1, along with brief statements on the focus and scope of each study, and a reference to a detailed discussion of each study. The various studies are summarized individually below.

308 BPT Questionnaires. In 1976, EPA contracted Rychman, Edgerley, Tomlinson, and Associates (RETA - now known as Envirodyne Engineers) of St. Louis, Missouri to survey the Organic Chemicals and Plastics/Synthetic Fibers Industries concerning their current wastewater control procedures. To aid in developing the BPT regulations, RETA and the Agency developed a "BPT Questionnaire" (see Appendix A) requesting basic information about wastewater

TABLE II-1

EPA TECHNICAL DATABASES USED IN EFFLUENT GUIDELINES DEVELOPMENT

STUDY	DATE	PURPOSE	SCOPE	Detailed Dis-cussion
308 BPT Questionnaire	1976-1977	Production and treatment of conventional and nonconventional pollutants	Responses from 566 plants in the Organic Chemicals and Plastics/ Synthetic Fibers Industries	II
Catalytic Biological Studies	1976-1978	Determination of kinetic constants and treatability factors for activated sludge treatment models of specific organic chemicals.	Bench scale studies of 22 individual organic chemicals in synthetic wastewaters.	VIII
308 BAT Questionnaire	1977-1978	Production and treatment of priority pollutants.	Same as above.	II
Screening Phase I	1977-1978	EPA-executed sampling study of pollutant occurrence and removal at plants manufacturing high volume chemicals.	103 plants; one day of sampling at each plant.	V
Indicatory Fate Study	1978 1978	Determination of the fate of specific priority pollutants in biological treatment.	Three plants.	APP E
Verification Study	1978-1980	EPA-executed sampling study of influents and effluents at major product/processes within the industry.	Thirty-seven plants; three days sampling at each plant.	V
Screening Phase II	1979	EPA-executed sampling study of pollutant occurrence and removal at plants manufacturing specialty chemicals.	40 plants; one day of sampling at each plant.	V
Physical-Chemical Sampling Program	1979-1981	Performance of treatment technologies: steam stripping, activated carbon, liquid-liquid extraction.	Four plants, one to two months at each plant.	VII
OSU Biological Treatment	1979-1982	Determination of kinetic constants for activated sludge treatment models; toxicity of priority pollutants to the activated sludge process.	Pilot studies of 24 organic compounds - toxicity work completed in two years; kinetic work continues.	APP E

II-9

TABLE II-1 (concluded)

STUDY	DATE	PURPOSE	SCOPE	Detailed Discussion
Organic Adsorption Resins	1979-1982	Removal of priority pollutants in pure solutions using activated carbon and resins.	Bench scale batch studies of 5 organic compounds.	APP E.
CMA 5-Plant Sampling Program	1980-1981	Study on removals of priority pollutants at well-designed and well-operated biological treatment systems.	Five plants; four to six weeks of daily sampling at each plant.	V
Carbon Adsorption and Steam Stripping Questionnaires	1980	Design and operating experience, and predictability of priority pollutant removals.	Responses from 93 plants using carbon adsorption, 20 using steam stripping.	APP E
Two-Plant Pollutant Predictability Study	1981	Confirm predictions of priority pollutants from feedstock and generic process chemistry.	Two plants, 50 to 75 product/processes at each, "long term" sampling.	V

generation and treatment at each plant. This was sent to plants that EPA determined manufactured products found in Lists 1, 2, and 3 in the questionnaire.

The mailing list was developed from a number of sources. The original list of organic chemicals producers was developed by Radian Corporation under EPA contract. This list was corrected and expanded by an examination of other sources, including the SRI Directory of Chemical Manufacturers, the Dun and Bradstreet Middle Market Directory, Moody's Industrial Manual, Standard and Poor's Index, the Thomas Register, and the Red Book of Plastics Manufacturers. From this work, 1,500 manufacturing sites were selected for the original mailing.

Of the approximately 1,500 questionnaires mailed, approximately 900 were returned with information appropriate to development of effluent limitations for the Organic Chemicals and Plastics/Synthetic Fibers Industries; apparently, the remaining questionnaires had been sent to sales offices, warehouses, and companies that did not manufacture either organic chemicals or plastics/synthetic fibers. The list of 900 plants was reduced by approximately 300 by deleting those plants that were believed to either belong to the Inorganics, Pharmaceuticals, Pesticides, or Gum and Wood categories; largely formulate adhesives and sealants, paints and inks; or manufacture plastic products. Manufacturers of such products (including latexes, polyvinyl acetates, phenol-urea resins, and phenol-formaldehyde resins) are to be regulated under either the Adhesives and Sealants, Paint and Ink Formulation, or Plastics Processing industrial categories. As a result, the 1,500 questionnaires produced a 308 database of 566 plants.

The Agency then re-evaluated the criteria for listing plants as manufacturers of plastics or synthetic fibers in the 308 database. EPA determined that a plant must manufacture a product or products fitting the descriptions listed in Standard Industrial Classification 2821, 2823, or 2824 (see Section III) to be included in the database for these regulations. EPA wished to supplement its information on the modes of discharge used at plastics/synthetic fibers plants. The Agency phoned each plastics/synthetic fibers plant listed in the SRI Directory of Chemical Producers that was not one of the 566 plants and asked:

(1) Whether the plant did not merely process finished resins but actually converted monomers to polymers;

(2) Whether the plant generated wastewaters from that conversion process;

(3) How such wastewaters were discharged (e.g., direct discharge to a river, discharge to a POTW, deepwell injection); and

(4) Whether and how these wastewaters were treated on site.

From this survey, EPA added approximately 240 plastics/synthetics plants to the 308 list. Since the Agency did not send out questionnaires to these 300 plants, no data from them was added to the 308 database.

308 BAT Questionnaire. The Agency received and analyzed approximately 900 completed BPT questionnaires by the summer of 1977 and concluded that the development of Best Available Technology Economically Achievable (BAT) regulations required more data on priority pollutants. The 1976 BPT questionnaire had asked each plant for information on products and production levels, in-plant and end-of-pipe wastewater treatment systems, water use and disposition, end-of-pipe treatment plant influent and effluent characteristics, raw water intake characteristics, discharge stream characteristics, and product/process waste stream characteristics. Individual priority pollution data reported on these questionnaires was limited. To supplement these data, in late 1977 EPA developed a second questionnaire, the BAT Questionnaire (see Appendix A) requesting data from industry on the occurrence and treatability of priority pollutants. The BAT questionnaire requested updated information from each plant about product/process configurations, production levels, wastewater treatment technology, chemical methods for priority pollutant analysis, and priority pollutant waste loads. This information was requested in a mailing to those plants in the database that had been determined to manufacture one or more products of concern (see Lists 1, 2, and 3 in the original questionnaire) or had reported production of priority pollutants in the BPT Questionnaire. Upon receipt, these data were entered into a computer file.

Screening and Verification Sampling and Analysis Program. The responses to the Agency's 1976 BPT and 1977 BAT 308 questionnaires were useful as an initial survey of what priority pollutants occurred at what concentrations in OCPSF wastewaters, but did not provide sufficient priority pollutant data to permit statistical derivation of effluent limitation concentrations. To gather the needed data, in 1977 EPA initiated a sampling and analysis program. This program, implemented in three parts -- Phase I Screening, Phase II Screening, and Verification -- was managed by EPA and performed by EPA contractors and EPA Regional Surveillance and Analysis staff. The analytical work was performed by several EPA Regional and contract laboratories listed in Section V. The major goal of the Screening Program was to gather qualitative data on the presence or absence of priority pollutants in OCPSF waste streams. The major goals of the Verification Program were to:

- Obtain priority pollutant raw waste load information on specific product/processes.

- Obtain information regarding the effectiveness of current wastewater treatment systems in reducing priority pollutant loadings, both at "end-of-pipe" and "in-process" treatment systems.

- Develop analytical methods for organic compounds based upon gas chromatography using conventional detectors rather than mass spectrometric detection.

Because the Agency did not have the massive funds and manpower necessary to gather data on the production, wastewater flow, and priority pollutant concentrations for all the individual product/processes in the Organic Chemicals and Plastics/Synthetic Fibers Industries, for its Verification

Program the Agency developed a ranking list of the categories of products manufactured by these industries. The priorities for regulation were as follows:

Priority 1 Chemicals manufactured in excess of 5 million pounds per year (top 100 production items) that are priority pollutants. This list contains 25 products.

Priority 2 Chemicals derived from priority pollutants and are manufactured in excess of 5 million pounds per year. This list contains 19 products.

Priority 3 Chemicals on the list of priority pollutants, not including Priority 1 above and not including pesticides. This list contains 67 products.

Priority 4 Chemicals derived from priority pollutants but that are manufactured at less than 5 million pounds per year. This list contains 146 products.

Priority 5 All other organic chemicals manufactured in excess of 5 million pounds per year. This list contains 81 products.

Priority 6 Organic, non-pesticide entries on the Toxic Substances Control Act (TSCA) "Candidate List of Chemical Substances," Volumes I to IV, USEPA, Office of Toxic Substances, April 1977, that are not in Priorities 1 through 5 above. This list contains 325 products.

Priority 7 The remainder of the 25,000 commercial industrial chemicals.

Appendix B lists the products in each of the first five priorities. EPA designed its product/process sampling program to produce data adequate for developing regulations for as many of the priority categories as possible, starting at Priority 1. The responses to both 308 Surveys were used to choose plants for sampling that utilized the maximum number of desired product/processes. Product/processes other than those targeted for sampling were also in operation at most of these facilities. Because it was convenient, some of these product/processes were sampled and added to the original list of product/processes to be sampled. The sampling studies completed through 1982 covered all of Priorities 1 through 4 and some of Priorities 5 and 6.

Time, staff, and money constraints forced EPA to study the industry in phases. Those product/processes considered essential in determining the economic and environmental impact of regulation on the industry were sampled in the Phase I Verification Study. The remainder of the industry was to be addressed in the Phase II Verification Study, which was never performed. The Phase II Screening Study was designed to show that specialty and small volume chemicals could be represented by the Phase I Verification results.

The Screening Study initially included 171 plants. However, because of various infractions of sampling protocols, 28 plants were deleted.

Thirty-seven plants were included in the Verification Study. Six plants, however, were eventually dropped from the database. Among the plants dropped from the Verification database were: zero discharge plants, plants where influents were not sampled, and plants where both blind spike samples were taken for organic analyses (see Appendix C) and where no metal sampling took place. Details and discussion of each study can be found in Section V.

EPA's other priority pollutant data collection efforts are each briefly described in the rest of this chapter. More details on each appear in the chapter of this report cited in Table II-1.

CMA Five-Plant Sampling Program. The Screening and Verification studies were one to three-day samplings at a large number of plants. In 1980 and 1981, the Chemical Manufacturers Association (CMA) and EPA cooperated on a series of 4- to 6-week studies at five chemical manufacturing plants that appeared to have well-designed and well-operated biological (activated sludge) treatment facilities. The five-plant study was structured to develop a long-term database on the removal of toxic organics by biological treatment systems. An extensive quality assurance/quality control program was executed to assure that the reliability of the analytical results could be defined so the database could be properly interpreted. More details of this study are in Section V.

Other EPA Studies.

(1) Physical-Chemical Sampling Program. EPA conducted a series of one to two-month sampling studies at four plants during 1979 through 1981 to determine the effectiveness of physical-chemical treatment technologies for removing toxic pollutants. Effluent streams from the following treatment technologies were monitored: steam stripping, activated carbon, and liquid-liquid extraction. The data were intended to be used to evaluate the priority pollutant influent concentration fluctuations and achievable effluent concentrations.

(2) Carbon Adsorption and Steam Stripping Questionnaires. The 308 questionnaires of 1976 and 1977 had gathered general information on in-plant treatment systems in use by the industry. In 1980 EPA conducted two additional surveys to assess the status of industrial usage of carbon adsorption and steam stripping for the removal of priority pollutants from process wastewaters, requesting specific information on system design, operating parameters, and efficiency of removal of priority pollutants for carbon adsorption and steam stripping treatments (see Appendix D for the questionnaires). The survey forms were prepared with the assistance of a task force from the American Institute of Chemical Engineers (AIChE). Survey response, although voluntary, was better than 80 percent for carbon adsorption (116 surveys distributed, 93 respondents) and approximately 50 percent for steam stripping (41 distributed, 20 respondents). More details of these questionnaires are given in Section VII.

(3) Two-Plant Pollutant Predictability Study. In 1981, EPA conducted long-term sampling programs at two plants to evaluate the concept of predicting priority pollutants in the product/process waste streams from knowledge of the process feedstock and of generic process chemistry. The

objective of these studies was to try to correlate daily loadings of priority pollutant levels with the product/processes being operated. The study was confined to a specific production area within each plant where 50 to 75 product/processes were being operated concurrently. Most of these product/processes were batch steps in multi-step syntheses and represented the wide variety of product/processes associated with the production of low-volume organic chemicals not investigated in previous sampling programs. More details of this study are given in Section V.

(4) Miscellaneous Studies. In developing these guidelines and in related work, EPA and its contractors have performed many other studies on priority pollutant occurrence, fate, predictability, removal kinetics, removal equilibria, some of which are listed in Table II-1. The results of these studies have facilitated evaluation of the occurrence and treatment of the priority pollutants discharged by the Organic Chemicals and Plastics/Synthetic Fibers Industries. The details of these studies are presented later in this report, where appropriate.

SECTION III

INDUSTRY DESCRIPTION

INTRODUCTION

The organic chemicals industry began modestly in the middle of the 19th century. The production of coke, used both as a fuel and reductant in blast furnaces for steel production, generated coal tar as a by-product. These tars were initially regarded as wastes. However, with the synthesis of the first coal tar dye (mauve) by Perkin in 1856, chemists and engineers began to recover and use them. The organic chemicals industry began with the isolation and commercial production of aromatic hydrocarbons such as benzene and toluene from coal tar.

As more organic compounds possessing valuable properties were identified, commercial production methods for these compounds became desirable. Not surprisingly, the early products of the chemical industry were those most desired by society: dyes, explosives, and pharmaceuticals. The economic incentive to recover and use industrial wastes and by-products continued to be a driving force behind the burgeoning chemical industry. For example, the chlorinated aromatic chemicals segment of the industry developed mainly because of: (1) the availability of large quantities of chlorine formed as a by-product from caustic soda production (already a commodity chemical); (2) the availability of benzene derived from coal tar; and (3) the discovery that such compounds could serve as useful intermediates for production of more valuable materials, such as phenol and picric acid. Specialty products such as surfactants, pesticides, and aerosol propellants were developed later to satisfy particular commercial needs.

The Plastics/Synthetic Fibers Industry began somewhat later as an outgrowth of the Organic Chemicals Industry. The first commercial polymers, rayon and bakelite, were produced in the early 1900s from feedstocks manufactured by the organic chemicals industry. In the last several decades, the variety of plastic and synthetic fiber products developed and the diversity of markets and applications of these products have made the Plastic/Synthetic Fibers Industry the largest (measured by volume) consumer of organic chemicals.

Chemicals derived from coal were the principal feedstocks of the early industry, although ethanol, derived from fermentation, was a source of some aliphatic compounds. Changing the source of industry feedstocks to less expensive petroleum derivatives lowered prices and opened new markets for organic chemicals and plastics/synthetic fibers during the 1920s and 1930s. By World War II, the modern Organic Chemicals and Plastics/Synthetic Fiber Industries based on petro-chemicals were firmly established in the United States. Future development of a synthetic fuel industry may again make coal a significant source of feedstocks to the organic chemicals industry.

Today the Organic Chemicals and Plastics/Synthetic Fibers Industries include production facilities of two distinct types: those whose primary function is

chemical synthesis, and those that recover organic chemicals as by-products from unrelated manufacturing operations such as coke plants (steel production) and pulp mills (paper production). The bulk of the plants in these industries are of the former type: plants that process chemical precursors (raw materials) into a wide variety of products for virtually every industrial and consumer market. Approximately ninety percent of the precursors, the primary feedstocks for all of the industry's thousands of products, are derived from petroleum and natural gas. The remaining ten percent is supplied by plants that recover organic chemicals from coal tar condensates generated by coke production.

There are numerous ways to describe the Organic Chemicals and Plastics/Synthetic Fibers Industries; however, traditional profiles such as number of product lines or volume of product sales mask the industry's complexity and diversity. Even more difficult is to describe these industries in terms that distinguish among plants according to wastewater characteristics. Subsequent sections of this chapter discuss the Organic Chemicals and Plastics/Synthetic Fibers Industries from several different perspectives, including product line, product sales, geographic distribution, facility size, facility age, and wastewater treatment practiced by these industries. The subcategorization of plants within the Organic Chemicals and Plastics/Synthetic Fibers Industries by process chemistry, raw and treated wastewater characteristics, and other plant-specific factors is discussed in Section IV.

DEFINITION OF THE INDUSTRY

Settlement Agreement Definition

Standard Industrial Classification (SIC) codes, established by the U.S. Department of Commerce, are classifications of commercial and industrial establishments by type of activity in which they are engaged. The Settlement Agreement (see Section II) defines the Organic Chemicals and Plastics/Synthetic Fibers Industries, addressed by this Development Document, to comprise the following SIC codes:

2865 Cyclic (Coal Tar) Crudes, and Cyclic Intermediates, Dyes, and Organic Pigments (Lakes and Toners).

2869 Industrial Organic Chemicals, Not Elsewhere Classified.

2821 Plastics Materials, Synthetic Resins, and Nonvulcanizable Elastomers.

2823 Cellulosic Man-Made Fibers.

2824 Synthetic Organic Fibers, Except Cellulosic.

The Settlement Agreement defines the Organic Chemicals Manufacturing and Plastics/Synthetic Materials Manufacturing Industries (since combined into the industry category addressed by this development document) to include all facilities within specific SIC codes. The Organic Chemicals Manufacturing industry includes two of these SIC codes: SIC 2865, Cyclic (Coal Tar) Crudes,

and Cylic Intermediates, Dyes, and Organic Pigments (Lakes and Toners); and SIC 2869, Industrial Organic Chemicals, Not Elsewhere Classified.

The products that the SIC Manual includes in the industrial organic chemical industry (SIC 286) are natural products such as gum and wood chemicals (SIC 2861), aromatic and other cyclic organic chemicals from the processing of coal tar and petroleum (SIC 2865), and aliphatic or acyclic organic chemicals (SIC 2869). These chemicals are the raw materials for deriving products such as plastics, rubbers, fibers, protective coatings, and detergents, but have few direct consumer uses. Gum and Wood Chemicals (SIC 2861) are regulated under a separate Consent Degree industrial category, Gum and Wood Chemicals Manufacturing.

The Plastics/Synthetic Materials Manufacturing category as defined by the Consent Decree, comprises SIC 282, Plastic Materials and Synthetic Resins, Synthetic and Other Manmade Fibers, except Glass. SIC 282, in turn, includes the following four-digit SIC codes:

2821 Plastics Materials, Synthetic Resins, and Nonvulcanizable Elastomers;

2822 Synthetic Rubber (Vulcanizable Elastomers)

2823 Cellulosic Man-Made Fibers

2824 Synthetic Organic Fibers, Except Cellulosic.

Of these codes, SIC 2822 is covered specifically by another Consent Decree industrial category, Rubber Processing. Similarly, another SIC code which might be considered as part of the Plastics industry, SIC 3079, the miscellaneous plastics products industry, is covered by the Consent Decree industrial category Plastics Molding and Forming.

The relationship of all the industries listed in the SIC Manual as being related to production of organic chemicals or plastics and synthetic fibers is shown in FIGURE III-1.

Primary, Secondary, and Tertiary SIC Codes

Standard Industrial Classification (SIC) codes, established by the U.S. Department of Commerce, are classifications of commerical and industrial establishments by type of activity in which they are engaged. The SIC code system is commonly employed for collection and organization of data (e.g., gross production, sales, number of employees, and geographic location) for U. S. industries. An establishment is an economic unit which produces goods or services--for example, a chemical plant, a mine, a factory, or a store. The establishment is at a single physical location and is typically engaged in a single or dominant type of economic activity for which an industry code is applicable.

Where a single physical location encompasses two or more distinct and separate economic activities for which different industrial classification codes seem applicable (for example, a steel plant that produces organic chemicals as a result of its coking operations), such activities are treated as separate

FIGURE 111-1

RELATIONSHIPS AMONG THE SIC CODES RELATED TO THE PRODUCTION OF ORGANIC CHEMICALS, PLASTICS, AND SYNTHETIC FIBERS

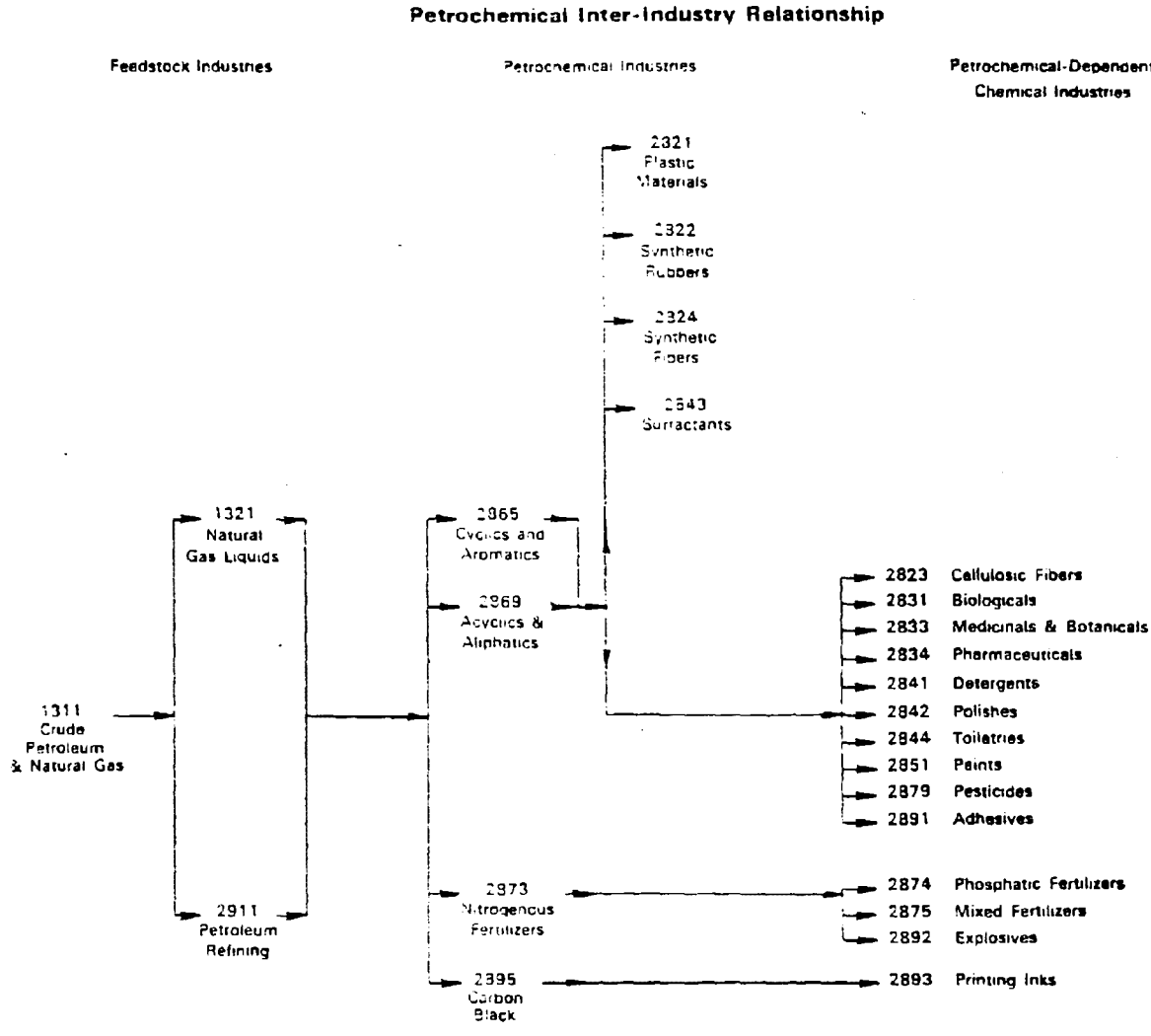

SOURCE: U.S. Department of Commerce, 1981b.

establishments under separate SIC codes, provided that: (1) no one industry description in the Standard Industrial Classification includes such combined activities; (2) the employment in each such economic activity is significant; (3) such activities are not ordinarily associated with one another at common physical locations; and (4) reports can be prepared on the number of employees, their wages and salaries, and other establishment type data. A single plant may include more than one establishment and more than one SIC code.

A plant is assigned a primary SIC code corresponding to its primary activity, which is the activity producing its primary product or group of products. The primary product is the product having the highest total annual shipment value. The secondary products of a plant are all products other than the primary products. Frequently in the chemical industry a plant may produce large amounts of a low-cost chemical but be assigned another SIC code because of lower-volume production of a high-priced specialty chemical. Many plants are also assigned secondary, tertiary, or lower order SIC codes corresponding to plant activities beyond their primary activities. The inclusion of plants with a secondary or lower order SIC code produces a list of plants manufacturing a given class of industrial products but also includes plants that produced only minor (or in some cases insignificant) amounts of those products. While the latter plants are part of an industry economically, their inclusion may distort seriously the description of the industry's wastewater production and treatment, unless the wastewaters can be segregated by SIC codes.

PRODUCT LINE

Products of Various SIC Categories

Important products of the Organic Chemicals Industry within SIC 2865 include: (1) derivatives of benzene, toluene, naphthalene, anthracene, pyridine, carbazole, and other cyclic chemical products; (2) synthetic organic dyes; (3) synthetic organic pigments; and (4) cyclic (coal tar) crudes, such as light oils and light oil products; coal tar acids; and products of medium and heavy oil such as creosote oil, naphthalene, anthracene, and their high homologues, and tar. Important products of the Organic Chemicals Industry within SIC 2869 include: (1) non-cyclic organic chemicals such as acetic, chloroacetic, adipic, formic, oxalic and tartaric acids and their metallic salts; chloral, formaldehyde and methylamine; (2) solvents such as amyl, butyl, and ethyl alcohols; methanol; amyl, butyl and ethyl acetates; ethyl ether, ethylene glycol ether and diethylene glycol ether; acetone, carbon disulfide and chlorinated solvents such as carbon tetrachloride, tetrachloroethene and trichloroethene; (3) polyhydric alcohols such as ethylene glycol, sorbitol, pentaerythritol, synthetic glycerin; (4) synthetic perfume and flavoring materials such as coumarin, methyl salicylate, saccharin, citral, citronellal, synthetic geraniol, ionone, terpineol, and synthetic vanillin; (5) rubber processing chemicals such as accelerators and antioxidants, both cyclic and acyclic; (6) plasticizers, both cyclic and acyclic, such as esters of phosphoric acid, phthalic anhydride, adipic acid, lauric acid, oleic acid, sebacic acid, and stearic acid; (7) synthetic tanning agents such as

naphthalene sulfonic acid condensates; (8) chemical warfare gases; and (9) esters, amines, etc. of polyhydric alcohols and fatty and other acids.

Products produced by the Plastics/Synthetic Fibers Industry are considerably more difficult to define. Within SIC 2821 important products include: cellulose plastic materials; phenolic and other tar acid resins; urea and melamine resins; vinyl resins; styrene resins; alkyd resins; acrylic resins; polyethylene resins; polypropylene resins; rosin modified resins; coumarone-indene and petroleum polymer resins; and miscellaneous resins including polyamide resins, silicones, polyisobutylenes, polyesters, polycarbonate resins, acetal resins, fluorohydrocarbon resins; and casein plastics. Important cellulosic man-made fibers (SIC 2823) include: acetate fibers, cellulose acetate, cellulose rayon, triacetate fibers, and viscose fibers. Important non-cellulosic synthetic organic fibers (SIC 2824) include: acrylic, acrylonitrile, casein, fluorocarbon, linear ester, modacrylic, nylon, olefin, polyester, polyvinyl, and polyvinylidene fibers.

Industry Structure by Product and Process

The branched product structure of the Organic Chemicals and Plastics/Synthetic Fibers Industries is illustrated in FIGURE III-2, which includes all the compounds that are currently produced in excess of 100 million pounds/year. The total product line of the industry is considerably more complex, but Figure III-2 illustrates the ability of the Organic Chemicals Industry to produce a product by different synthesis pathways. For each of the approximately 1,200 products that are produced in excess of one thousand pounds per year, there is an average of two synthetic routes. The more than 20,000 compounds that are produced in smaller quantities by the industry tend to be more complex molecules that can be synthesized by multiple routes. Because all products are generally produced by one or more manufacturers by different synthetic routes, few plants have exactly the same products and process combinations as other plants.

The apparently complex and diverse Organic Chemicals and Plastics/Synthetic Fibers Industries can be simplified by recognizing that approximately 2,500 distinct chemical products are synthesized from only seven parent compounds--methane, ethene, propene, butane/butenes, benzene, toluene, and o,p-xylenes. These seven compounds are processed into derivatives which in turn are sold or used as feedstocks for the synthesis of other derivatives.

All chemical plants share another trait: the transformation of one chemical to another is accomplished by chemical reactions and physical processes in the stepwise fashion implied in Figure III-2. Although each transformation represents at least one chemical reaction, virtually all transformations can be classified by generalized chemical reactions/processes. Imposition of these processes upon the seven basic feedstocks leads to commercially produced organic chemicals. The numerous permutations of feedstocks and processes permit the industries to produce a wide variety of products.

These industries can also produce a given product by more than one process. Since different processes require different raw materials and reaction conditions, the wastewater generated in producing one chemical can vary greatly depending on the process used. For example, 1,2-dichloroethane may be

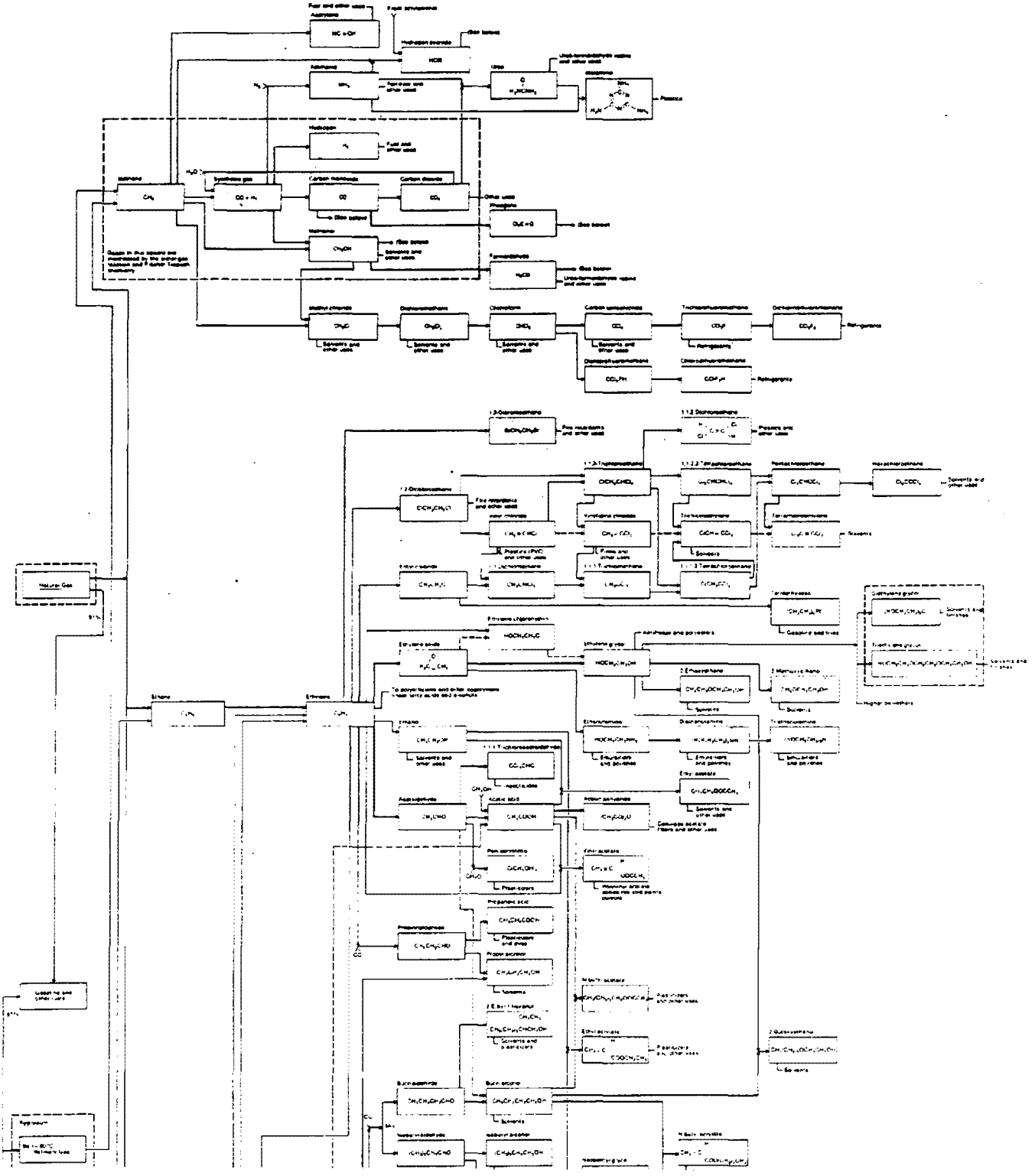

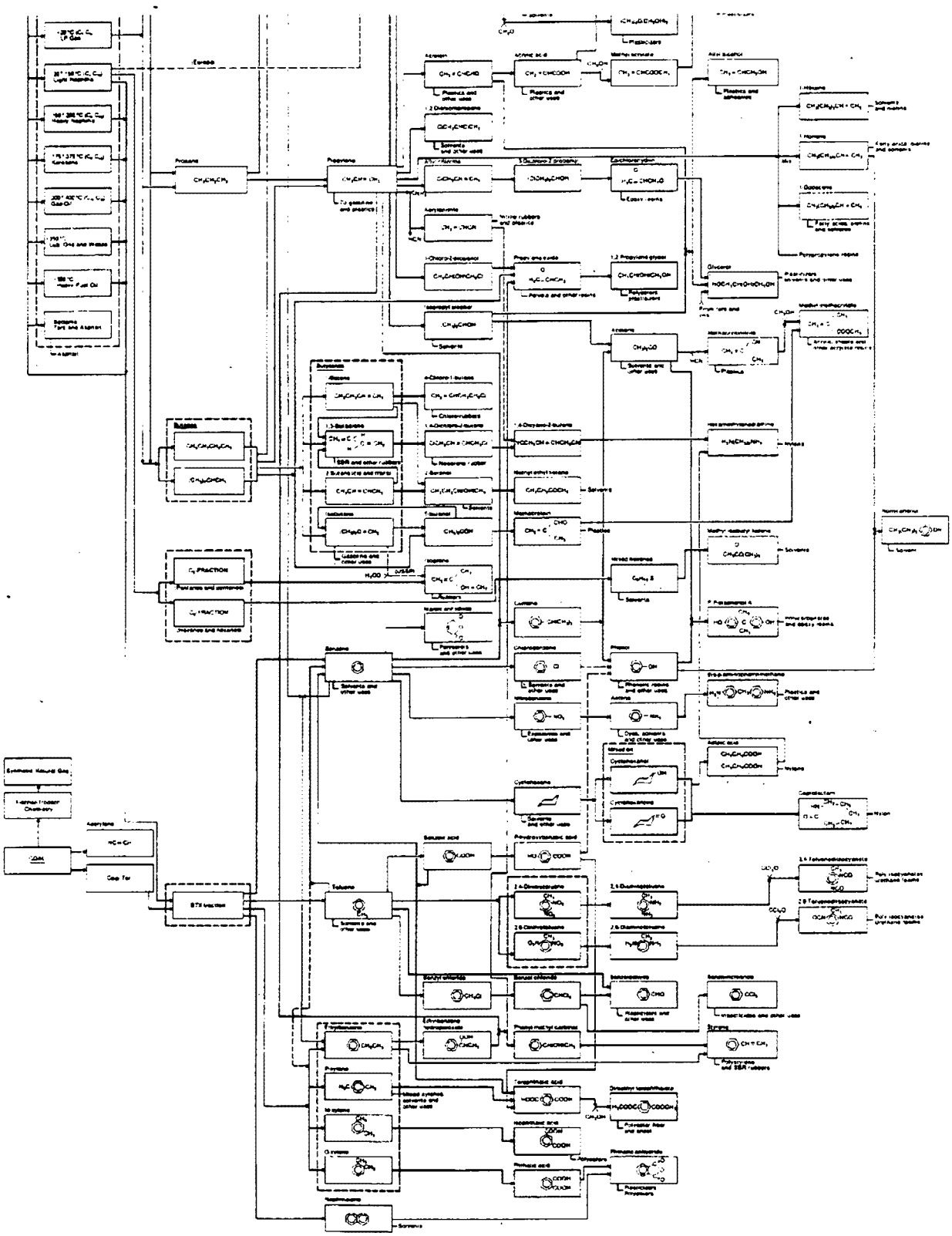

FIGURE III-2 MAJOR SYNTHETIC PATHWAYS OF THE ORGANIC CHEMICALS INDUSTRY

manufactured by direct chlorination or oxychlorination of ethene; the toxic pollutant load from the former product/process is negligible while that from oxychlorination is significant. TABLES III-1 AND III-2 list the major product/processes of the Organic Chemicals and Plastics/Synthetic Fibers Industries.

Additionally, processes are not product-specific and allow plants a degree of flexibility not found in most industries. Using the same equipment, a plant may vary its product mix relatively easily to respond to market fluctuations. Plants are often modified to produce other products, increase capacity, or produce the same product by a different synthetic route. Overall production of a product, however, is of course limited by the unit operation with the smallest capacity within a series of unit operations. Plant capacities are highly variable, even between plants that use the same unit process to produce the same product.

Plant Variations

The Organic Chemicals and Plastics/Synthetic Fibers Industries' manufacturing plants consist of a small number of very large plants and a large number of very small plants (see "Plant Size"). Most of the small plants are batch process plants that make only low-volume chemicals. Such a plant may produce a total of 1,000 different products with 70 to 100 of these being produced on any given operating day. Manufacturing plants that produce large quantities of specific chemicals often incorporate fewer unit processes than smaller plants that generate a large number of products. A representative high-volume plant may produce a total of 45 high volume products with an additional 300 lower volume products.

The production level at which it becomes economical to convert a batch to a continuous process is typically 500,000 to 1,000,000 kg of product per year. While most high volume chemicals are produced by continuous or semi-continuous processes and most low-volume chemicals are produced by batch processes, many products, including some high-volume products, can only be produced by batch processes, because of the chemical reactions involved. For polyvinylchloride (PVC), for example, one of the largest volume synthetic polymers produced in the United States, most PVC processing steps are batch reactions.

Because production efficiencies are greater for the high-volume products, the waste production per ton of product for the small-volume products is often higher than for the large volume products. Moreover, the wastewater volume and strength generated by plants using batch processes is inherently more variable than plants using continuous processes. Regardless of the process type, wastewater treatment facilities typically serve the entire process complex, rather than individual process units.

Many plants or companies exhibit a pronounced degree of vertical integration while others produce only a limited number of products from one level of the chemical product tree (Figure III-2). Vertical integration is typified by petroleum refiners (SIC 2911), which use their hydrocarbons to produce primary and intermediate chemical materials (SIC 2865 and SIC 2869) and subsequently convert them to such products as plastics (SIC 2821 and SIC Table 3079), synthetic fibers (2824), and synthetic rubber (SIC 2822). Horizontal

TABLE III-1

MAJOR PRODUCTS BY PROCESS OF THE ORGANIC CHEMICALS INDUSTRY

PRODUCT	PROCESS FEEDSTOCK	PRODUCTION VOLUME (METRIC TON)
ACENAPHTHENE	BY-PRODUCT (PROPANE PYROLYSIS)	
ACETALDEHYDE	BY-PRODUCT (ACROLEIN/PROPENE/OXIDATION)	
	DEHYDROGENATION (ETHANOL)	
	OXIDATION (ETHENE)	
ACETIC ACID	BY-PRODUCT (DIATRIZOIC ACID)	1,339,547
	BY-PRODUCT (POLYVINYL ACETAL)	
	BY-PRODUCT (POLYVINYL ALCOHOL)	
	BY-PRODUCT (p-AMINOPHENOL)	
	CARBONYLATION (METHANOL)	
	CO-PRODUCT (TEREPHTHALIC ACID)	
	OXIDATION (ACETALDEHYDE)	
	OXIDATION (BUTANE)	
	RECOVERY (POLYOL PROCESS)	
	RECOVERY (SULFITE PULP WASTEWATER)	
	TRANSESTERIFICATION (METHYL ACETATE/FORMIC ACID)	
ACETIC ACID SALTS	NEUTRALIZATION	12,998
ACETIC ANHYDRIDE	ADDITION (ACETIC ACID/KETENE)	
	PYROLYSIS (ACETIC ACID)	
ACETONE	DEHYDROGENATION (ISOPROPANOL)	
	OXIDATION (BUTANE/PROPANE)	189,971
	OXIDATION (ISOPROPANOL/H2O2)	
	PEROXIDATION/ACID CLEAVAGE (CUMENE)	744,129
ACETONE CYANOHYDRIN	HYDROCYANATION (ACETONE)	422,068
ACETONITRILE	AMINATION/DEHYDRATION (ACETAMIDE ACID)	11,349
	BY-PRODUCT (ACRYLONITRILE/AMMOXIDATION/PROPENE)	
ACETOPHENONE	BY-PRODUCT (PHENOL/PEROXIDATION/ACID CLEAVAGE)	1,901
ACETYL SALICYLIC ACID	ACETYLATION (SALICYLIC ACID/ACETYL CHLORIDE)	
	ACETYLATION (SALICYLIC ACID/ACETIC ANHYDRIDE)	
ACETYLENE	BY-PRODUCT (PROPANE PYROLYSIS)	
	HYDROLYSIS (CALCIUM CARBIDE)	
	OXIDATION (METHANE)	
ACROLEIN	OXIDATION (PROPENE)	
ACRYLAMIDE	HYDRATION (ACRYLONITRILE)	34,585
ACRYLIC ACID	FORMLYATION/HYDRATION (ACETYLENE/CARBON MONOXIDE/WATER)	275,027
	OXIDATION (ACROLEIN)	
	OXIDATION (PROPENE)	
ACRYLIC ACID ESTERS	ESTERIFICATION (MISCELLANEOUS ALCOHOLS)	
	MODIFIED REPPE PROCESS	
ACRYLIC ACID, ALLYL 2-CYANO	CONDENSATION (ACRYLONITRILE/FORMALDEHYDE/ALLYLIC ALCOHOL)	
ACRYLIC ACID, ETHYL	ESTERIFICATION (ACRYLIC ACID)	
ACRYLIC ACID, ETHYL 2-CYANO	CONDENSATION (ACRYLONITRILE/FORMALDEHYDE/ETHANOL)	
ACRYLIC ACID, ETHYLHEXYL	ESTERIFICATION (ACRYLIC ACID)	

TABLE III-1 (continued)

PRODUCT	PROCESS FEEDSTOCK	PRODUCTION VOLUME (METRIC TON)
ACRYLIC ACID, ISOBUTYL	ESTERIFICATION (ACRYLIC ACID)	
ACRYLIC ACID, METHYL 2-CYANO	CONDENSATION (ACRYLONITRILE/FORMALDEHYDE/METHANOL)	
ACRYLIC ACID, N-BUTYL	ESTERIFICATION (ACRYLIC ACID)	
ACRYLONITRILE	AMMOXIDATION (PROPENE)	823,452
ADIPIC ACID	DEPOLYMERIZATION (NYLON 6)	
	OXIDATION (CYCLOHEXANE)	
	OXIDATION (CYCLOHEXANOL)	
	OXIDATION (CYCLOHEXANONE)	
ADIPIC ACID,DI(2-ETHYLHEXYL)ESTER	ESTERIFICATION (ADIPIC ACID)	14,424
ADIPIC ACID,DI-ISODECYL ESTER	ESTERIFICATION (ADIPIC ACID)	493
ADIPIC ACID,DI-TRIDECYL ESTER	ESTERIFICATION (ADIPIC ACID)	
ADIPONITRILE	AMMONOLYSIS (ADIPIC ACID)/DEHYDRATION)	
	CHLORINATION/CYANATION (BUTADIENE)	
	ELECTROHYDRODIMERIZATION (ACRYLONITRILE)	
	HYDROCYANATION (BUTADIENE)	
ALKOXY ALKANOLS	HYDROLYSIS (ALKYL OXIDES)	
ALKYL AMINES	AMINATION (ALCOHOLS)	
	HYDROGENATION (FATTY NITRILES)	
ALKYL BENZENES	ALKYLATION (BENZENE/ALPHA-OLEFINS)	402,984
ALKYL PHENOLS	ALKYLATION (PHENOL)	
	ALKYLATION (PHENOL)	
ALLYL ALCOHOL	HYDROLYSIS (ALLYL CHLORIDE)	
ALLYL ALCOHOL	REDUCTION (ACROLEIN/ALUMINUM BUTOXIDE)	
ALLYL CHLORIDE	CHLORINATION (PROPENE)	
AMANTADINE HYDROCHLORIDE	AMINATION (ADAMANTYL CHLORIDE)	
AMINO ALCOHOLS	CONDENSATION (NITROPARAFFINS/FORMALDEHYDE) REDUCTION	
AMINOETHYLETHANOLAMINE	CONDENSATION (ETHYLENEDIAMINE/ETHYLENE OXIDE)	
BIS-PARA-AMINOCYCLOHEXYLMETHANE	CONDENSATION (ANILINE/FORMALDEHYDE) HYDROGENATION	
AMYL ACETATES	ESTERIFICATION (ACETIC ACID/AMYL ALCOHOLS)	
ANILINE	BY-PRODUCT (P-AMINOPHENOL)	296,739
	HYDROGENATION (NITROBENZENE)	
ANISIDINE	METHYLATION/HYDROGENATION (NITROPHENOL)	
ANTHRACENE	DISTILLATION (COAL TAR)	
ANTHRAQUINONE	OXIDATION (ANTHRACENE)	
BENZALDEHYDE	OXIDATION (TOLUENE)	
BENZENE	BY-PRODUCT (ACRYLIC ACID/REPPE PROCESS)	
	BY-PRODUCT (SILICONE MANUFACTURE)	
	BY-PRODUCT (STYRENE/ETHYLBENZENE DEHYDROGENATION)	
	DISTILLATION (BTX EXTRACT CAT REFORMATE)	
	DISTILLATION (BTX EXTRACT-COAL TAR LIGHT OIL)	7,597,998*
	DISTILLATION (BTX EXTRACT-PYROLYSIS GASOLINE)	6,445,094

TABLE III-1 (continued)

PRODUCT	PROCESS FEEDSTOCK	PRODUCTION VOLUME (METRIC TON)
BENZENE (contd)	HYDRODEALKYLIZATION (TOLUENE/XYLENE)	
	STEAM PYROLYSIS (LPG)	
BENZO-A-PYRENE	STEAM PYROLYSIS (COAL TARS)	
BENZOIC ACID	OXIDATION (TOLUENE)	33,036
BENZOYL PEROXIDE	OXIDATION (BENZOYL CHLORIDE/SODIUM PEROXIDE)	3,086
BENZYL CHLORIDE	CHLORINATION (TOLUENE)	
BIPHENYL	PYROLYSIS (BENZENE)	21,407
BISPHENOL-A	CONDENSATION (ACETONE/PHENOL)	238,359
BROMOFORM	BROMINATION (ACETONE/SODIUM HYPOBROMITE)	
BTX	PYROLYSIS (GASOLINE)	
1,3-BUTADIENE	DEHYDRATION (n-BUTANE)	1,259,528
	EXTRACTIVE DISTILLATION (C-4 PYROLYZATES)	
BUTANE	BY-PRODUCT (BUTADIENE)	677,907
	NATURAL GAS BY-PRODUCT	
BUTANE (ALL FORMS)	CATALYTIC REFORMING (NAPHTHA)	
	REFINERY BY-PRODUCT	
1,4-BUTANEDIOL	FORMYLATION/HYDROGENATION (ACETYLENE)	48,424
BUTENES	EXTRACTIVE DISTILLATION (C4 PYROLYZATES)	302,645
2-BUTENE-1,4-DIOL	HYDROGENATION (BUTYNEDIOL)	
n-BUTYL ALCOHOL	BY PRODUCT (1,3-BUTYLENE GLYCOL)	355,722
	DISTILLATION (DILUTE AQUEOUS BUTANOL)	
	HYDROGENATION (n-BUTYRALDEHYDE/OXO PROCESS)	
tert-BUTYL ALCOHOL	HYDRATION (ISOBUTENE)	
BUTYL LACTATE	ESTERIFICATION (LACTIC ACID)	
n-BUTYLACETATE	ESTERIFICATION (BUTANOL/ACETIC ANHYDRIDE)	56,748
1,3-BUTYLENE GLYCOL	HYDROGENATION (ACETALDOL)	
tert-BUTYLPHENOL	ALKYLATION (PHENOL/ISOBUTENE)	
n-BUTYRALDEHYDE	HYDROFORMYLATION (PROPENE/OXO PROCESS)	412,065
n-BUTYRIC ACID	CO-PRODUCT (BUTANE OXIDATION)	
	OXIDATION (BUTYRALDEHYDE)	
3-BUTYROLACTONE	OXIDATION (1,4-BUTANEDIOL)	
n-BUTYRONITRILE	AMINATION/DEHYDRATION (BUTANOL/NH3)	
C-13 TO C19 ALKYL AMINES	HYDROCYANATION/HYDROGENATION (C-12 TO C-18 OLEFINS)	
CAPROLACTAM	AMINATION (CYCLOHEXANONE OXIME)	
	DEPOLYMERIZATION (NYLON 6)	
CARBON TETRACHLORIDE	BY-PRODUCT (PHOSGENE)	319,316
	CHLORINATION (CARBON DISULFIDE)	
	CHLORINATION (METHANE)	
	CHLORINATION (METHYL CHLORIDE)	
	CO-PRODUCT (TETRACHLOROETHENE)	
CHLORINATED PARAFFIN	CHLORINATION (PARAFFINS)	44,955
CHLOROACETIC ACID	CHLORINATION (ACETIC ACID)	7,072
CHLOROBENZENE	CHLORINATION (BENZENE)	127,275

TABLE III-1 (continued)

PRODUCT	PROCESS FEEDSTOCK	PRODUCTION VOLUME (METRIC TON)
CHLOROBUTADIENE	CHLORINATION/DEHYDROCHLORINATION (BUTADIENE)	
	CHLORINATION/DEHYDROCHLORINATION (BUTADIENE)	
CHLORODIFLUOROMETHANE	HYDROFLUORINATION (CHLOROFORM)	102,408
CHLOROFORM	BY-PRODUCT (ACETALDEHYDE PRODUCTION)	158,894
	CHLORINATION (METHANE)	
	CHLORINATION (METHYL CHLORIDE)	
BIS-(2-CHLOROISOPROPYL) ETHER	BY-PRODUCT (PROPENE OXIDE/CHLOROHYDRINATION)	
3-CHLORONITROBENZENE	CHLORINATION (NITROBENZENE)	
2-CHLORONITROBENZENE	NITRATION (CHLOROBENZENE)	
4-CHLORONITROBENZENE	NITRATION (CHLOROBENZENE)	
2-CHLOROPHENOL	CHLORINATION (PHENOL)	
4-CHLOROPHENYL PHENYL ETHER	CHLORINATION (PHENYL PHENYL ETHER)	
CHLOROPRENE	DEHYDROCHLORINATION (3,4-DICHLORO-2-BUTENE)	
CHOLINE CHLORIDE	CONDENSATION (ETHYLENE CHLOROHYDRIN/TRIMETHYL AMINE)	
	CONDENSATION (ETHYLENE OXIDE/ TRIMETHYLAMINE/HCL)	
COAL TAR	COKING (COAL)	2,055,512*
COAL TAR PRODUCTS (MISC.)	DISTILLATION (COAL TAR)	
CREOSOTE	DISTILLATION (COAL TAR LIGHT OIL)	229,553*
CRESOLS, MIXED	REFINING (TAR ACID)	35,181
CROTYL ALCOHOL	HYDROGENATION (CROTONALDEHYDE)	
CUMENE	ALKYLATION (BENZENE/PROPENE)	1,556,672
CYANOACETIC ACID	CYANATION (CHLOROACETIC ACID)	
CYANURIC ACID	TRIMERIZATION (UREA)	
CYCLOHEXANE	HYDROGENATION (BENZENE)	883,684
CYCLOHEXANE DIMETHANOL	HYDROGENATION (DIMETHYL TERAPHTHALATE)	
CYCLOHEXANOL	HYDROGENATION (PHENOL)	
CYCLOHEXANOL/ONE(MIXED)	OXIDATION (CYCLOHEXANE)	
CYCLOHEXANONE	DEHYDROGENATION (CYCLOHEXANOL)	345,067
	HYDROGENATION (PHENOL)	
	OXIDATION (CYCLOHEXANE)	
CYCLOHEXYL MERCAPTAN	HYDROSULFURATION (CYCLOHEXENE)	
CYCLOOCTADIENE	DIMERIZATION (BUTADIENE)	
CYCLOPENTADIENE DIMER	EXTRACTIVE DISTILLATION (C5 PYROLYZATES)	
DIACETONE ALCOHOL	CONDENSATION (ACETONE)	30,846
DIACETONE ALCOHOL PEROXIDE	PEROXIDATION (DIACETONE ALCOHOL)	
DIAMINO DIPHENYL METHANE	CONDENSATION (ANILINE/FORMALDEHYDE)	
DIBUTYLPHENYL PHOSPHATE	ESTERIFICATION (BUTANOL/PHENOL/POCL3)	
1,2-DICHLOROBENZENE	CHLORINATION (BENZENE)	21,954
	PHOSGENATION SOLVENT RECOVERY (MDI/TDI MANUFACTURE)	
1,3-DICHLOROBENZENE	CHLORINATION (BENZENE)	
1,4-DICHLOROBENZENE	CHLORINATION (BENZENE)	
DICHLORODIFLUOROMETHANE	HYDROFLUORINATION (CARBON TETRACHLORIDE)	132,741

TABLE III-1 (continued)

PRODUCT	PROCESS FEEDSTOCK	PRODUCTION VOLUME (METRIC TON)
DICHLORODIPHENYL SULFONE	SULFONATION (SO3/THIONYL CHLORIDE/CHLOROBENZENE)	
1,1-DICHLOROETHANE	HYDROCHLORINATION (VINYL CHLORIDE)	
1,2-DICHLOROETHANE	DIRECT CHLORINATION (ETHENE)	4,998,524
	OXYCHLORINATION (ETHENE)	
DICHLORONITROBENZENE	CHLORINATION (NITROBENZENE)	
2,4-DICHLOROPHENOL	CHLORINATION (PHENOL)	
DICHLOROPROPANE	BY-PRODUCT (CHLOROHYDRINATION PROPENE)	
1,2-DICHLOROPROPENE	BY-PRODUCT (ALLYL CHLORIDE)	
DIETHANOL AMMONIUM LAURYL SULFATE	ALKYLATION (LAURYLAMINE/ETHLENE OXIDE)	
N,N-DIETHYL ANILINE	ALKYLATION (ANILINE/ETHANOL)	
DIETHYL MALONATE	ESTERIFICATION (MALONIC ACID)	
DIETHYL SULFIDE	ALKYLATION (K ETHYLSULFATE/K2S)	
DIETHYLENE GLYCOL	CO-PRODUCT (ETHENE GLYCOL)	172,085
	CO-PRODUCT (HYDROLYSIS OF ETHYLENE OXIDE)	
	ETHERIFICATION/HYDROLYSIS (ETHYLENE OXIDE)	
DIETHYLENE TRIAMINE	AMINATION (ETHLENE DIAMINE/ 1,2-DICHLOROETHANE/NH3)	
DIISOPROPYL BENZENE	ALKYLATION OF BENZENE (CUMENE)	
N,N,DIISOPROPYL-2 BENZOTHIAZOLE	AMINATION (DIISOPROPYL AMINE/2-MERCAPTOBENZOTHIAZOLE)	
DIKETENE	DIMERIZATION (KETENE/ACETIC ACID)	
DIMERCAPTAN D-LIMONENE	HYDROSULFURATION (D-LIMONENE)	
2-DIMETHYLAMINOETHANOL	AMINATION (ETHANOL)	4,491
DIMETHYL ETHER	DEHYDRATION (METHANOL)	
DIMETHYL MALONATE	ESTERIFICATION (MALONIC ACID)	
2,4-DIMETHYL PHENOL	EXTRACTION DISTILLATION (REFINERY CRESYLATES)	
DIMETHYL SULFATE	ESTERIFICATION (METHANOL/SULFURIC ACID)	
DIMETHYL TEREPHTHALATE	ESTERIFICATION (TERPHTHALLIC ACID)	
	OXIDATION/ESTERIFICATION (P-XYLENE)	
DIMETHYLACETAMIDE	AMINATION (DIMETHYLAMINE/ACETIC ACID)	
N,N-DIMETHYLANILINE	CONDENSATION (ANILINE/METHANOL)	
DIMETHYLBENZYL ALCOHOL	HYDROLYSIS (CUMENE HYDROPEROXIDE)	
N,N-DIMETHYLFORMAMIDE	CONDENSATION (DIMETHYLAMINE/FORMALDEHYDE)	
	CONDENSATION (DIMETHYLAMINE/FORMIC ACID)	
DINITROBENZENE (MIXED)	NITRATION (BENZENE)	
DINITROTOLUENE (MIXED)	NITRATION (TOLUENE)	
2,4-DINITROTOLUENE	NITRATION (TOLUENE)	
2,6-DINITROTOLUENE	NITRATION (TOLUENE)	
DINONENE	DEALKYLATION (TERPINENE)	
DIPHENYL ETHER	ETHERIFICATION (CHLOROBENZENE/SODIUM PHENOLATE)	
DIPHENYLAMINE	CONDENSATION (ANILINE)	
DIPROPYLENE GLYCOL	CO-PRODUCT (HYDROLYSIS/PROPENE OXIDE)	12,215
	CONDENSATION (PROPYLENE GLYCOL)	
2,2-DITHIOBISBENZOTHIAZOLE	OXIDATION (2-MERCAPTOBENZOTRIAZOLE)	

TABLE III-1 (continued)

PRODUCT	PROCESS FEEDSTOCK	PRODUCTION VOLUME (METRIC TON)
DODECYLBENZENE SULFONIC ACID SALTS	SULFONATION (DODECYLBENZENE)	
DODECYLGUANIDINE ACETATE	ADDITION (DODECYLAMINE/CYANAMIDE)	
DODECYLMERCAPTAN	HYDROSULFURATION (DODECENE)	
EPICHLOROHYDRIN	EPOXIDATION (ALLYL CHLORIDE/CHLOROHYDRINATION)	
ETHANE	BY-PRODUCT (NATURAL GAS)	3,149,938
	CRACKING (NAPTHA)	
	REFINERY BY-PRODUCT	
ETHANOL	CO-PRODUCT (BUTANE OXIDATION)	18,692
	HYDRATION (ETHENE)	
ETHANOLAMINES	AMMONOLYSIS (ETHYLENE OXIDE)	169,242
ETHYLENEDIAMINETETRAACETIC ACID	ACYLATION (ETHYLENEDIAMINE/FORMALDEHYDE/NACN)	
ETHOXYLATES, ALKYL	ETHERIFICATION (ALKYLENE OXIDE/ALKANOL)	
ETHOXYLATES, ALKYLPHENOL	ETHOXYLATION (PHENOL/ETHYLENE OXIDE)	
ETHOXYLATES, C11, C12	ETHOXYLATION (LINEAR ALCOHOLS/ETHLENE OXIDE)	
ETHYL ACETATE	CO-PRODUCT (BUTANE OXIDATION)	105,141
	ESTERIFICATION (ACETIC ACID/ETHANOL)	
	TRANSESTERIFICATION (POLYVINYL ACETATE/ETHANOL)	
ETHYL ACETOACETATE	CONDENSATION (ACETIC ACID)	
N-ETHYL ANILINE	ALKYLATION (ETHANOL/ANILINE)	
ETHYL CHLORIDE	HYDROCHLORINATION (ETHENE)	178,370
ETHYL ORTHOFORMATE	ESTHERIFICATION (CHLOROFORM/SODIUM ETHOXIDE)	
ETHYLAMINE	AMMONOLYSIS (ETHANOL)	
ETHYLBENZENE	ALKYLATION (BENZENE)	3,438,956
	DISTILLATION (BTX EXTRACT)	
	DISTILLATION (COAL TAR)	
ETHYLCYANOACETATE	ESTERIFICATION (CYANOACETIC ACID)	
ETHLENE	FRACTIONATION (REFINERY LIGHT ENDS)	12,899,938
	PYROLYSIS (ETHANE)	
	PYROLYSIS (ETHANE/PROPANE/BUTANE/LPG)	
	PYROLYSIS (NAPHTHA/GAS OIL)	
ETHYLENE CYANOHYDRIN	CYANATION (ETHYLENE CHLOROHYDRIN/NACN)	
	HYDROCYANATION (ACETALDEHYDE)	
ETHYLENE DIAMINE	AMINATION (1,2-DICHLOROETHANE)	
ETHYLENE DIBROMIDE	BROMINATION (ETHENE)	
ETHYLENE GLYCOL	HYDROLYSIS (ETHYLENE OXIDE)	1,973,579
ETHYLENE GLYCOL MONOETHYL ETHER	ALKYLATION (ETHANOL/ETHYLENE OXIDE/ACETIC ANHYDRIDE)	
ETHYLENE GLYCOL MONOMETHYL ETHER	ALKYLATION (METHANOL/ETHYLENE OXIDE)	43,768
ETHYLENE OXIDE	EPOXIDATION (ETHYLENE CHLOROHYDRIN)	2,349,180
	OXIDATION (ETHENE)	
2-ETHYLHEXANOIC ACID	OXIDATION (2-ETHYLHEXANAL)	6,633
2-ETHYLHEXANOL	CONDENSATION/HYDROGENATION (n-BUTALDEHYDE)	
FORMALDEHYDE	OXIDATION (METHANOL-METAL OXIDE PROCESS)	2,499,907
	OXIDATION (METHANOL-SILVER CATALYST)	

TABLE III-1 (continued)

PRODUCT	PROCESS FEEDSTOCK	PRODUCTION VOLUME (METRIC TON)
FORMAMIDE	AMINATION (FORMIC ACID)	
FORMIC ACID	BY-PRODUCT (BUTANE OXIDATION)	
	RECOVERY (SULFITE PULP WASTEWATER)	
FUMARIC ACID	ISOMERIZATION (MALEIC ACID)	17,923
GLUTAMIC ACID, MONOSODIUM SALT	NEUTRALIZATION	
GLYCERINE (SYNTHETIC)	HYDRATION (ALLYL ALCOHOL)	
	HYDROLYSIS (EPICHLOROHYDRIN)	
GLYCOLS, MIXED	OXO PROCESS	147,736
GLYOXAL	OZONATION (BENZENE)	
HEPTANE	EXTRACTION/ADSORPTION (BTX SOLVENT)	
HEXACHLOROBENZENE	BY-PRODUCT (CHLOROSILANES)	
	BY-PRODUCT (TETRACHLOROETHENE)	
	CHLORINATION (BENZENE)	
HEXACHLOROETHANE	CHLORINATION (ETHANE)	
HEXAMETHYLENEDIAMINE	AMMONOLYSIS (1,6-HEXANEDIOL)	
	DEPOLYMERIZATION (NYLON 66)	
	HYDROGENATION (ADIPONITRILE)	
HEXAMETHYLENETETRAMINE	CONDENSATION (FORMALDEHYDE/NH3)	40,916
HEXANE	EXTRACTION/ADSORPTION (BTX SOLVENT)	176,802
	REFINERY BY-PRODUCT	
HEXYLENE GLYCOL	HYDROGENATION (DIACETONE ALCOHOL)	
HEXYLENE GLYCOL (1,6-HEXANEDIOL)	CONDENSATION (ACETONE)	
HYDROQUINONE	OXIDATION (ANILINE)	
HYDROXYACETIC ACID	HYDROLYSIS (CHLOROACETIC ACID)	
2-IMIDAZOLIDONE	CARBONYLATION (ETHYLENE DIAMINE/CO2)	
IMINODIACETIC ACID	CONDENSATION (NH3/FORMALDEHYDE/NACN)	
ISOAMYLENE	EXTRACTIVE DISTILLATION (BTX RAFFINATE)	
ISOBUTANOL	CONDENSATION (ACETALDEHYDE)	
	HYDROGENATION (ISOBUTYRALDEHYDE-OXO PROCESS)	
ISOBUTYL ACETATE	ESTERIFICATION (ISOBUTANOL/ACETIC ANHYDRIDE)	30,340
ISOBUTYLENE	DEHYDRATION (tert-BUTANOL)	
	EXTRACTION (C4 PYROLYZATE)	
ISOBUTYRALDEHYDE	HYDROFORMYLATION (PROPENE/OXO PROCESS)	116,655
ISOBUTYRIC ACID	OXIDATION (ISOBUTYRALDEHYDE)	
ISOBUTYRONITRILE	AMINATION/DEHYDRATION (ISOBUTANOL)	
	HYDROGENATION (ALPHA-METHACRYLONITRILE)	
ISODECANOL	CARBONYLATION/HYDROGENATION (OLEFIN OLIGOMERS)	
ISOOCTYL ALCOHOL	CARBONYLATION/HYDROGENATION (OLEFIN OLIGOMERS)	
ISOPENTANE	DISTILLATION (C4/C5 HYDROCARBON MIX)	
ISOPHORONE	CONDENSATION (ACETONE)	
ISOPHTHALIC ACID	OXIDATION (XYLENE)	
ISOPRENE	EXTRACTIVE DISTILLATION (C5 PYROLYZATE)	92,390
ISOPROPANOL	HYDRATION (PROPENE)	
	HYDROGENATION (ACETONE)	

TABLE III-1 (continued)

PRODUCT	PROCESS FEEDSTOCK	PRODUCTION VOLUME (METRIC TON)
ISOPROPYL ACETATE	ESTERIFICATION (ISOPROPANOL/ACETIC ANHYDRIDE)	
M-XYLENE (IMPURE)	FRACTIONATION (MIXED XYLENES)	
MALEIC ANHYDRIDE	BY-PRODUCT (PHTHALIC ANHYDRIDE/OXIDATION)	136,590
	OXIDATION (BENZENE)	
MALIC ACID	HYDRATION (MALEIC ACID)	
MELAMINE	CONDENSATION (UREA)	
MERCAPTAN, ETHYL	HYDROSULFURATION (ETHENE)	
MERCAPTAN, METHYL	ALKYLATION (METHYL CHLORIDE/SODIUM HYDROSULFIDE)	
MERCAPTAN, i-PROPYL	HYDROSULFURATION (ISOPROPENE)	
MERCAPTAN, n-BUTYL	HYDROSULFURATION (N-BUTENE)	
MERCAPTAN, n-DECYL	HYDROSULFURATION (n-DECENE)	
MERCAPTAN, n-HEXADECYL	HYDROSULFURATION (N-HEXADECENE)	
MERCAPTAN, n-HEXYL	HYDROSULFURATION (N-HEXENE)	
MERCAPTAN, n-OCTYL	HYDROSULFURATION (N-OCTENE)	
MERCAPTAN, n-PROPYL	HYDROSULFURATION (n-PROPENE)	
MERCAPTAN, n-TETRADECYL	HYDROSULFURATION (n-TETRADELENE)	
MERCAPTAN, n-TRIDECYL	HYDROSULFURATION (n-TRIDECENE)	
MERCAPTAN, sec-BUTYL	HYDROSULFURATION (ISOBUTENE)	
MERCAPTAN, t-BUTYL	HYDROSULFURATION (ISOBUTENE)	
MESITYL OXIDE	DEHYDRATION (DIACETONE ALCOHOL)	14,293
METANILIC ACID	HYDROGENATION (3-NITROBENZENE SULFONIC ACID)	
METHACRYLIC ACID	HYDROLYSIS (ACETONE CYANOHYDRIN)	
METHACRYLIC ACID ESTERS	ESTERIFICATION (METHACRYLIC ACID)	
METHANOL	BY-PRODUCT (ALKYLOLAMIDES MANUFACTURE)	3,218,838
	BY-PRODUCT (POLYESTER MANUFACTURE)	
	HYDROGENATION (CARBON MONOXIDE)	
	HYDROGENATION (FORMALDEHYDE)	
	OXIDATION (BUTANE)	
	OXIDATION (H.P. SYNTHESIS NATURAL GAS/SYNTHETIC GAS)	
	OXIDATION (L.P. SYNTHESIS NATURAL GAS/ SYNTHETIC GAS)	
METHYL AMYL ALCOHOL	CONDENSATION (ACETONE)	
METHYL BROMIDE	HYDROHALOGENATION (METHANOL)	
METHYL CHLORIDE	BY-PRODUCT (ETHYLENE OXIDE)	163,045
	CHLORINATION (METHANE)	
	HYDROCHLORINATION (METHANOL)	
METHYL CYANOACETATE	ESTERIFICATION (CYANOACETIC ACID)	
METHYL ETHYL KETONE	BY-PRODUCT (BUTANE OXIDATION)	264,067
	REDUCTION (ACROLEIN/ALUMINUM BUTOXIDE)	
METHYL FORMATE	OXIDATION/REDUCTION (FORMALDEHYDE)	
N-METHYL GLYCINE (SARCOSINE)	CONDENSATION (METHYLAMINE/FORMALDEHYDE/NACN)	
METHYL ISOBUTYL CARBINOL	CONDENSATION (ACETONE)	
METHYL ISOBUTYL KETONE	HYDROGENATION (MESITYL OXIDE)	75,726
METHYL KETONE	DEHYDROGENATION (sec-BUTANOL)	

TABLE III-1 (continued)

PRODUCT	PROCESS FEEDSTOCK	PRODUCTION VOLUME (METRIC TON)
METHYL METHACRYLATE	ESTERIFICATION (METHACRYLIC ACID)	350,924
	METHANOLYSIS (ACETONE CYANOHYDRIN)	
	POLYMER CRACKING	
METHYL ORTHOFORMATE	ETHERIFICATION (CHLOROFORM/SODIUM METHOXIDE)	
METHYL SALICYLATE	ESTERIFICATION (SALICYLIC ACID)	
METHYL SULFIDE	ALKYLATION (POTASSIUM METHYL SULFATE/K2S)	
METHYLAMINES	AMMINATION (METHANOL/AMMONIA)	
2,2'-METHYLENEBIS(6-t-BUTYL-4-ETHYLPHENOL)	CONDENSATION (4-ETHYL-6-t-BUTYLPHENOL/FORMALDEHYDE)	
METHYLENE CHLORIDE	CHLORINATION (METHANE)	253,774
	CHLORINATION (METHYL CHLORIDE)	
4,4'-METHYLENE DIANILINE	CONDENSATION (FORMALDEHYDE/ANILINE)	
METHYLENE DIPHENYL DIISOCYANATE	PHOSGENATION (METHYLENEDIANILINE)	
METHYLETHYL KETOXIME	HYDROXYAMINATION (METHYLETHYL KETONE/ HYDROXYLAMINE)	
N-METHYL-2-PYRROLIDONE	CONDENSATION (3-BUTYROLACTONE/METHYLAMINE)	
METHYLSTYRENE	BY-PRODUCT (ACETONE/PHENOL BY CUMENE OXIDATION)	17,436
METHYLSTYRENE	DEHYDROGENATION (CUMENE)	
2-(MORPHOLINO-THIO)-BENZOTHIAZOLE	AMINATION (MORPHOLINE/2-MERCAPTOBENZOTHIAZOLE)	
NAPHTHALENE	DISTILLATION (PYROLYSIS GAS)	46,511
	SEPARATION (COAL TAR DISTILLATE)	
NEOPENTANOIC ACID	OXIDATION (ISOBUTYLENE VIA OXO PROCESS)	
4-NITROANILINE	AMMONOLYSIS (4-NITROCHLOROBENZENE)	6,493
NITROBENZENE	NITRATION (BENZENE)	275,232
1-NITRO-3,4-DICHLOROBENZENE	NITRATION (o-DICHLOROBENZENE)	
2-NITROPHENOL	NITRATION (PHENOL)	
4-NITROPHENOL & SODIUM SALT	NITRATION (PHENOL)	
N-NITROSODIPHENYLAMINE	NITROSATION (DIPHENYLAMINE/NITROUS OXIDE)	
NITROTOLUENE	NITRATION (TOLUENE)	
5-NITRO-o-TOLUENE SULFONIC ACID	SULFONATION/NITRATION (TOLUENE)	
O-CRESOL	REFINING (MIXED CRESOLS)	12,267
O-PHENYL PHENOL	HYDROGENOLYSIS (DIBENZOFURAN)	
O-XYLENE	DISTILLATION (MIXED XYLENE)	447,717
OCTANE	EXTRACTION/ADSORPTION (BTX SOLVENT)	
OXO ALDEHYDES/ALCOHOLS	OXIDATION (HYDROCARBONS-OXO PROCESS)	
p-OCTYL PHENOL	ALKYLATION (PHENOL)	
P-AMINOPHENOL	REDUCTION (NITROPHENOL)	
P-HYDROXYACETANILIDE	NITRATION, HYDROGENATION, ACETYLATION (BENZENE)	
P-XYLENE	CRYSTALIZATION (MIXED XYLENES)	1,906,912
	ISOMERIZATION-CRYSTALLIZATION (MIXED XYLENES)	
PENTACHLOROBENZENE	CHLORINATION OF BENZENE	
PENTACHLOROPHENOL	CHLORINATION (PHENOL)	
PENTAERYTHRITOL	CONDENSATION (ACETALDEHYDE/FORMALDEHYDE)	52,434
PENTANE	REFINERY BY-PRODUCT	

TABLE III-1 (continued)

PRODUCT	PROCESS FEEDSTOCK	PRODUCTION VOLUME (METRIC TON)
PERACETIC ACID	PEROXIDATION (ACETALDEHYDE)	
PHENOL	BY-PRODUCT (DIPHENYL OXIDE)	60,684
	BY-PRODUCT (ISOCYANATES PRODUCTION)	
	OXIDATION (BENZOIC ACID)	
	OXIDATION (TOLUENE)	
	PEROXIDATION/ACID CLEAVAGE (CUMENE)	
	RECOVERY (PYROLYSIS GASOLINE)	
	RECOVERY (TAR ACID)	
	SULFONATION/HYDROLYSIS (BENZENE)	
PHENYL GLYCINE	ACYLATION (ANILINE/CHLOROACETIC ACID)	
PHOSGENE	CHLORINATION (CARBON MONOXIDE)	469,049
PHOSPHATE ESTERS	PHOSGENATION	
PHTHALATE ESTER, BIS 2-ETHYLHEXYL	ESTERIFICATION (ALCOHOL)	
, BUTYLBENZYL	ESTERIFICATION (BUTANOL/BENZYL CHLORIDE)	
, BUTYLOCTYL	ESTERIFICATION (ALCOHOL)	
, C11-C14	ESTERIFICATION (ALCOHOL)	
, C7-C10	ESTERIFICATION (ALCOHOL)	
, DIDECYL	ESTERIFICATION (ALCOHOL)	
, DIETHYL	ESTERIFICATION (ALCOHOL)	9,423
, DIISODECYL	ESTERIFICATION (ALCOHOL)	54,828
, DIISOOCTYL	ESTERIFICATION (ALCOHOL)	115,733
, DI-N-HEXYL	ESTERIFICATION (ALCOHOL)	
, DI-N-OCTYL	ESTERIFICATION (ALCOHOL)	7,157
, DI-TRIDECYL	ESTERIFICATION (ALCOHOL)	11,496
, DIBUTYL	ESTERIFICATION (ALCOHOL)	8,144
, DIMETHYL	ESTERIFICATION (ALCOHOL)	3,169
, DIPHENYL	ESTERIFICATION (PHENOL/PHTHALYL CHLORIDE)	
, MIXED ALCOHOL	ESTERIFICATION (ALCOHOL)	
, OCTYLDECYL	ESTERIFICATION (ALCOHOL)	
, n-HEPTYLNONYLUNDECYL	ESTERIFICATION (ALCOHOL)	
, n-HEXYL-2-ETHYLHEXYLISODECYL	ESTERIFICATION (ALCOHOL)	
, n-HEXYL-2-ETHYLHEXYL	ESTERIFICATION (ALCOHOL)	
, n-HEXYLHEPTYLNONYLUNDECYL	ESTERIFICATION (ALCOHOL)	
, n-HEXYLOCTYLDECYL	ESTERIFICATION (ALCOHOL)	
PHTHALIC ANHYDRIDE	OXIDATION (NAPHTHALENE)	368,211
	OXIDATION (O-XYLENE)	
PITCH TAR RESIDUE	SEPARATION (COAL TAR LIGHT OIL DISTILLATE)	
PROPANE	BY-PRODUCT (NATURAL GAS)	3,920,500
	PYROLYSIS (BUTANE)	
	REFINERY BY-PRODUCT	
PROPENE	FRACTIONATION (REFINERY LIGHT ENDS)	
	PYROLYSIS (ETHANE/PROPANE/BUTANE/LPG)	
	PYROLYSIS (NAPHTHA AND OR GAS OIL)	
	PYROLYSIS (NAPHTHA, PROPANE, ETHANE, BUTANE)	

TABLE III-1 (continued)

PRODUCT	PROCESS FEEDSTOCK	PRODUCTION VOLUME (METRIC TON)
PROPIONALDEHYDE	HYDROFORMYLATION (ETHENE-OXO PROCESS)	112,257
PROPIONIC ACID	BY-PRODUCT (NITROPARAFFINS PRODUCTION)	46,339
	CO-PRODUCT (BUTANE OXIDATION)	
	OXIDATION (PROPIONALDEHYDE)	
n-PROPYL ACETATE	ESTERIFICATION (ACETIC ACID/PROPANOL)	22,630
n-PROPYL ALCOHOL	HYDROGENATION (PROPIONALDEHYDE)	80,212
PROPYLENE CHLOROHYDRIN	HYDROCYANATION (PROPENE)	
PROPYLENE DICHLORIDE	BY-PRODUCT (PROPENE OXIDE PRODUCTION)	34,629
	CHLOROHYDRINATION (ALLYL CHLORIDE)	
PROPYLENE GLYCOL	HYDROLYSIS (PROPENE OXIDE)	219,387
PROPYLENE OXIDE	EPOXIDATION (PROPENE VIA CHLOROHYDRIN)	795,224
PYROLYSIS GASOLINE	CRACKING (ETHANE/PROPANE/BUTANE/LPG)	
	CRACKING (ETHANE/PROPANE/BUTANE AND NAPTHA)	
2-PYRROLIDONE	CONDENSATION (3-BUTYROLACTONE/NH3)	
SALICYLIC ACID	CARBOXYLATION (SODIUM PHENOLATE)	17,572
SEC-BUTYL ALCOHOL	HYDRATION (BUTENES)	
SODIUM BENZOATE	NEUTRALIZATION	
SODIUM FORMATE	NEUTRALIZATION	
SODIUM LAURYL SULFATE	SULFONATION (LAURYL ALCOHOL)	
SODIUM LINEAR ALKYL BENZENE SULFONATE	SULFONATION (ALKYLBENZENE)	
SODIUM NITROBENZENESULFONIC ACID	NEUTRALIZATION	
SODIUM STYRENE SULFONATE	SULFONATION (STYRENE)	
STYRENE	DEHYDROGENATION (ETHYLBENZENE)	3,085,358
	DISTILLATION (PYROLSIS GASOLINE)	
SULFANILIC ACID	SULFONATION (ANILINE)	
SULFOLANE	SULFONATION/HYDROGENATION (1,4-BUTADIENE)	
TEREPHTHALIC ACID	CATALYTIC OXIDATION (P-XYLENE)	2,348,384
	HYDROLYSIS (DIMETHYL TEREPHTHALATE)	
1,2,3,4-TETRACHLOROBENZENE	CHLORINATION (BENZENE)	
1,2,3,5-TETRACHLOROBENZENE	CHLORINATION (BENZENE)	
1,2,4,5-TETRACHLOROBENZENE	CHLORINATION (BENZENE)	
1,1,2,2-TETRACHLOROETHANE	CHLORINATION (ETHLENE)	
TETRACHLOROETHENE	CHLORINATION (1,2-DICHLOROETHANE/OTHER CHLORINATED HYDROCARBONS)	344,381
	CHLORINATION (HYDROCARBONS)	
	OXYCHLORINATION (HYDROCARBONS)	
TETRACHLOROPHTHALIC ANHYDRIDE	CHLORINATION (PHTHALIC ANHYDRIDE)	
TETRAETHLENE GLYCOL	CO-PRODUCT (ETHYLENE GLYCOL)	9,320
TETRAETHLENE PENTAMINE	CONDENSATION (ETHYLENE DIAMINE/ 1,2-DICHLOROETHANE/NH3)	
TETRAETHYL LEAD	ALKYLATION (ETHYL CHLORIDE/SODIUM-LEAD ALLOY)	
TETRAFLUORODICHLOROETHANE	HYDROFLUORINATION (TETRACHLOROETHENE)	
TETRAHYDROFURAN	HYDROGENATION (MALEIC ANHYDRIDE)	
TETRAHYDROTHIOPHENE	HYDROGENATION (THIOPHENE)	

TABLE III-1 (continued)

PRODUCT	PROCESS FEEDSTOCK	PRODUCTION VOLUME (METRIC TON)
TETRAMETHYL LEAD	ALKYLATION (METHYL CHLORIDE/SODIUM-LEAD ALLOY)	
THIOPHENE	DEHYDROGENATION (BUTANE/SULFUR)	
TOLUENE	BY-PRODUCT (STYRENE MANUFACTURE)	
	DISTILLATION (BTX EXTRACT-CAT REFORMATE)	
	DISTILLATION (BTX EXTRACT-COAL TAR LIGHT OIL)	3,850,560*
	DISTILLATION (BTX EXTRACT-PYROLYSIS GASOLINE)	3,275,355
	STEAM PYROLYSIS (LPG)	
TOLUENE DIAMINE (MIXTURE)	HYDROGENATION (DINITROTOLUENES)	
2,4-TOLUENE DIAMINE	HYDROGENATION (DINITROTOLUENE)	109,689
TOLUENE DIISOCYANATES(MIXTURE)	PHOSGENATION (TOLUENEDIAMINES)	
2,4-TOLUENE DIISOCYANATE	PHOSGENATION (2,4-TOLUENE DIAMINE)	264,398
TOLUENESULFONAMIDE	AMINATION (TOLUENE SULFONYL CHLORIDE)	
TOLUENESULFONYL CHLORIDE	CHLORINATION (TOLUENE SULFONIC ACID/CHLOROSULFONIC ACID)	
TOLUIDINE	CATALYTIC REDUCTION (O-NITROTOLUENE)	
1,2-TRANS-DICHLOROETHLENE	CHLORINATION (ETHENE)	
TRI-OCTYL TRIMELLITATE	ESTERIFICATION (TRIMELLITIC ANHYDRIDE)	5,694
1,2,3-TRICHLOROBENZENE	BY-PRODUCT (BENZENE CHLORINATION)	
1,2,4-TRICHLOROBENZENE	BY-PRODUCT (BENZENE CHLORINATION)	
	CHLORINATION (1,4-DICHLOROBENZENE)	
1,3,5-TRICHLOROBENZENE	BY-PRODUCT (BENZENE CHLORINATION)	
1,1,1-TRICHLOROETHANE	CHLORINATION (1,2-DICHLOROETHANE)	311,521
	CHLORINATION (ETHANE)	
	HYDROCHLORINATION (VINYL CHLORIDE)	
1,1,2-TRICHLOROETHANE	BY-PRODUCT (VINYL CHLORIDE MANUFACTURE)	
	CHLORINATION (1,2-DICHLOROETHANE)	
	CHLORINATION (VINYL CHLORIDE)	
TRICHLOROETHENE	CHLORINATION (1,2-DICHLOROETHANE/OTHER HYDROCARBONS)	119,918
	OXYCHLORINATION (HYDROCARBONS)	
TRICHLOROFLUOROMETHANE	HYDROFLUORINATION (CARBON TETRACHLORIDE)	71,136
2,4,6-TRICHLOROPHENOL	CHLORINATION (PHENOL)	
TRICHLOROPROPENE	CHLORINATION/DEHYDROCHLORINATION (PROPENE)	
1,1,2-TRICHLORO-1,2,2-TRIFLUOROETHANE	HYDROFLUORINATION (CO-PRODUCT TETRAFLUORODICHLOROETHANE)	
TRIETHANOL AMMONIUM LAURYL SULFATE	ALKYLATION (LAURYL AMINE/ETHYLENE OXIDE)	
TRIETHANOLAMINE LINEAR ALKYLBENZENE SULFONATE	ETHOXYLATION	
TRIETHYLENE GLYCOL	CO-PRODUCT (ETHYLENE GLYCOL/ETHYLENE OXIDE)	55,227
	CO-PRODUCT/HYDROLYSIS (ETHLENE OXIDE)	
	CONDENSATION (ETHYLENE GLYCOL/ETHYLENE OXIDE)	
	RECOVERY FROM ETHYLENE GLYCOL STILL BOTTOMS	
TRIETHYLENETETRAMINE	AMINATION (1,2-DICHLOROETHANE)	
TRIFLUORODICHLOROETHANE	HYDROFLUORINATION (TETRACHLOROETHENE)	
TRIMELLITIC ANHYDRIDE	OXIDATION (1,2,4-TRIMETHYL BENZENE)	
TRIMETHYLOLETHANE	CONDENSATION (PROPIONALDEHYDE/FORMALDEHYDE)	
TRIMETHYLOLPROPANE	CONDENSATION (n-BUTYRALDEHYDE/FORMALDEHYDE)	

TABLE III-1 (concluded)

PRODUCT	PROCESS FEEDSTOCK	PRODUCTION VOLUME (METRIC TON)
2,2,4-TRIMETHYL-1,3-PENTANEDIOL	CONDENSATION (ISOBUTYRALDEHYDE)	
TRIPROPYLENE GLYCOL	CONDENSATION (PROPYLENE GLYCOL/PROPYLENE OXIDE)	
UREA	CONDENSATION (NH_3/CO_2)	
VINYL ACETATE	ESTERIFICATION (ACETYLENE/ACETIC ACID)	864,680
	ESTERIFICATION (ETHENE/ACETIC ACID)	
VINYL CHLORIDE	DEHYDROCHLORINATION (1,2-DICHLOROETHANE)	2,909,646
VINYLIDENE CHLORIDE	DEHYDROCHLORINATION (TRICHLOROETHANE)	
N-VINYL-2-PYRROLIDONE	CONDENSATION (3-BUTYROLACTONE/ETHANOLAMINE)	
XYLENES, MIXED	EXTRACTION (CAT REFORMATE)	
	EXTRACTION (COAL TAR LIGHT OIL)	3,438,847*
	EXTRACTION (PYROLYSIS GASOLINE)	3,102,564
	ISOMERIZATION (CRUDE P-XYLENE)	
	SEPARATION (XYLENE BOTTOMS)	
XYLENESULFONIC ACID, SODIUM SALT	SULFONATION (XYLENE)	15,091
XYLENOL, MIXED	TAR ACID RECOVERY AND REFINING	

* measured in 1,000 liter units

TABLE III-2

MAJOR PRODUCTS BY PROCESS OF THE PLASTICS/SYNTHETIC FIBERS INDUSTRY

PRODUCT	PROCESS FEEDSTOCK	PRODUCTION VOLUME (METRIC TON)
ABS RESIN	EMULSION POLYMERIZATION	441,481
	MASS POLYMERIZATION	
	SUSPENSION POLYMERIZATION	
ACRYLIC FIBER (85% POLYACRYLONITRILE)	SUSPENSION POLYMERIZATION-WET SPINNING	
	SUSPENSION POLYMERIZATION-WET SPINNING	
ACRYLIC LATEX	EMULSION POLYMERIZATION	
ACRYLIC RESINS	BULK POLYMERIZATION	462,669
	EMULSION POLYMERIZATION	
	POLYACRYLAMIDE BY SOLUTION POLYMERIZATION	
	SOLUTION POLYMERIZATION	
	SUSPENSION POLYMERIZATION	
ALKYD RESINS	CONDENSATION/POLYMERIZATION	316,260
CARBOXMETHYL CELLULOSE	ETHERIFICATION (CELLULOSE)	
CELLOPHANE	VISCOSE PROCESS	
CELLULOSE ACETATES FIBERS	SPINNING FROM ACETYLATED CELLULOSE	
CELLULOSE ACETATES RESIN	ACETYLATION (CELLULOSE)	
CELLULOSE ACETATES/PROPIONATES	ESTERIFICATION (CELLULOSE)	
CELLULOSE NITRATE	NITRATION (CELLULOSE)	
CELLULOSE SPONGE	VISCOSE PROCESS	
CHLOROSILANES	CHLORINATION (SILICON DIOXIDE/SILICONE MONOMERS)	
COPOLYMERS (POLYVINYL ACETATE	EMULSION POLYMERIZATION	
EPOXIDIZED ESTERS, TOTAL	EPOXIDATION (UNSATURATED ESTERS)	48,482
EPOXY RESINS	CONDENSATION (EPICHLOROHYDRIN/NOVOLAK RESINS)	199,558
	CONDENSATION (EPICHLOROHYDRIN/BISPHENOL A)	
	CONDENSATION (POLYOLS/EPICHLOROHYDRIN)	
	EPOXIDATION (POLYMERS)	
ETHYL CELLULOSE	ALKYLATION (CELLULOSE/ETHYL CHLORIDE)	
FLUOROCARBON RESINS	POLYMERIZATION (FLUORINATED OLEFINS)	
HYDROXYETHYL CELLULOSE	ETHOXYLATION (ALKALI CELLULOSE)	
HYDROXYPROPYL CELLULOSE	ETHERIFICATION (CELLULOSE)	
ISOBUTYLENE POLYMERS	POLYMERIZATION (ISOBUTENE)	
MELAMINE RESINS	POLYCONDENSATION (MELAMINE/FORMAL)	83,714
METHYL CELLULOSE	METHYLATION (CELLULOSE/METHYL CHLORIDE)	
MODACRYLIC RESIN	FIBER-POLYACRYLONITRILE & COMONOMER	
	RESIN-POLYACRYLONITRILE & COMONOMER	
NYLON	MISCELLANEOUS NYLON PRODUCTS-RESINS	121,073
	NYLON FORMALDEHYDE RESIN	
NYLON 6	FIBER - POLYCONDENSATION (CAPROLACTAM)	
	RESIN - POLYCONDENSATION (CAPROLACTAM)	
NYLON 6 & 66 COPOLYMER	POLYCONDENSATION (NYLON SALT/CAPROLACTAM)	
NYLON 612	RESIN-POLYCONDENSATION (HMDA/CISDIACIDS)	
NYLON 66	FIBER - POLYCONDENSATION (NYLON SALT)	
	RESIN - POLYCONDENSATION (NYLON SALT)	

TABLE III-2 (continued)

PRODUCT	PROCESS FEEDSTOCK	PRODUCTION VOLUME (METRIC TON)
NYLON SALT	CONDENSATION (ADIPIC ACID/HMDA-AQUEOUS SOLUTION)	329,432
	CONDENSATION (ADIPIC ACID/HMDA-METHANOL SOLUTION)	
NYLONS	CONDENSATION (ADIPIC ACID/DIETHYLENETRIAMINE/ EPICHLOROHYDRIN)	
PETROLEUM HYDROCARBON RESINS	CONDENSATION (C5-C8 UNSATURATES)	119,019
PHENOLIC RESINS	CONDENSATION (PHENOL/FORMALDEHYDE)	785,218
POLYAMIDES	AMINATION (ETHYLENE AMINES/FATTY ACIDS)	
	CONDENSATION (DICARBOXYLIC ACID/DIAMINE)	
POLYBUTENES	SOLUTION POLYMERIZATION (BUTENES)	
POLYESTER	FIBER BY MELT SPINNING (DMT/1,4-CYCLOHEXANE DIMETHANOL)	
	FIBER BY MELT SPINNING (DMT/ETHYL GLYCOL)	
	FIBER BY MELT SPINNING (TPA/ETHYL GLYCOL)	
	FIBER BY MELT SPINNING (TPA/DMT/ETHYL GLYCOL)	
	FILM (DMT/1,4 CYCLOHEXANE DIMETHANOL)	
	RESIN BY POLYCONDENSATION (DMT/1,4-CYCLOHEXANOL)	
	RESIN BY POLYCONDENSATION (TPA/ETHYLENE GLYCOL)	233,629
	RESIN BY POLYCONDENSATION (PHTHALIC ANHYDRIDE)	
	RESIN BY POLYCONDENSATION (DMT/ETHYLENE GLYCOL)	
	RESIN BY POLYCONDENSATION (TPA/DMT/ETHYLGLYCOL)	
	RESIN BY POLYCONDENSATION (DMT/BUTANEDIOL)	39,838
	RESIN BY POLYCONDENSATION (VARIOUS ACID/ALCOHOLS)	
POLYETHYLENE GYCOL	POLYMERIZATION (ETHYLENE OXIDE)	49,332
POLYETHYLENE POLYAMINES	AMINATION (ETHYLENE DIAMINE/ 1,2-DICHLOROETHANE/NH3)	
POLYETHYLENE RESINS	GAS PHASE POLYMERIZATION (HDPE)	5,273,952
	HIGH PRESSURE POLYMERIZATION (LDPE)	
	SOLUTION POLYMERIZATION (HDPE)	
	SUSPENSION POLYMERIZATION (PARTICLE FORM HDPE)	
POLYMERIC METHYLENE DIANILINE	CONDENSATION (ANILINE/FORMALDEHYDE)	
POLYMERIC METHYLENE DIPHENYL DIISOCYANATE	PHOSGENATION (POLYMETHYLENE DIANILINE)	
POLYOXYETHYLENE GLYCOL	ETHOXYLATION (ETHYLENE GLYCOL)	
POLYOXYPROPYLENE GLYCOL	CONDENSATION (PROPYLENE GYCOL/PROPYLENE OXIDE)	
	PROPOXYLATION (GLYCERINE)	
POLYPROPYLENE	GAS PHASE POLYMERIZATION	
	POLYMER EXTRUSION	
	RESIN BY SOLUTION POLYMERIZATION	1,664,544
	RESIN BY SUSPENSION POLYMERIZATION	
POLYSTYRENE AND COPOLYMERS	BULK POLYMERIZATION W/O RUBBER	
	BULK POLYMERIZATION WITH RUBBER	
	SUSPENSION POLYMERIZATION W/O RUBBER	
POLYSTYRENE, EXPANDED	POLYMERIZATION (POLYSTYRENE)	
POLYSULFONE RESINS	CONDENSATION (BISPHENOL A/DICHLOROPHENYL SULFONE)	
POLYURETHANE RESINS	CONDENSATION (POLYOLS/DIISOCYANATES)	114,095

TABLE III-2 (concluded)

PRODUCT	PROCESS FEEDSTOCK	PRODUCTION VOLUME (METRIC TON)
POLYVINYL ACETATE & PVC COPOLYMERS	EMULSION POLYMERIZATION	
	SOLUTION POLYMERIZATION	
	STAPLE FIBER FROM RESIN	
	SUSPENSION POLYMERIZATION	
POLYVINYL ACETATE COPOLYMERS	COPOLYMERIZATION WITH ETHENE	
	SOLUTION POLYMERIZATION (VINYL PYRROLIDINONE)	
POLYVINYL ACETATE RESINS	EMULSION POLYMERIZATION	300,754
	SOLUTION POLYMERIZATION	
POLYVINYL ACETATE+ACRYLIC COPOLYMERS	EMULSION POLYMERIZATION	
POLYVINYL ALCOHOL	HYDROLYSIS (POLYVINYL ACETATE)	
	RESIN-SOLUTION POLYMERIZATION (VINYL ACETATE/HYDROLYSIS OF POLYMER)	70,241
POLYVINYL BUTYRAL	CONDENSATION (POLYVINYL ACETATE/BUTYRALDEHYDE)	
POLYVINYL CHLORIDE	BULK POLYMERIZATION	2,468,417**
	EMULSION POLYMERIZATION	
	SUSPENSION POLYMERIZATION	
POLYVINYL CHLORIDE COPOLYMERS	SUSPENSION POLYMERIZATION	
POLYVINYL PYRROLIDONE	POLYMERIZATION (VINYL PYRROLIDINONE)	
POLYVINYLIDENE CHLORIDE	EMULSION POLYMERIZATION	
RAYON	VISCOSE PROCESS	
SAN RESINS	MASS POLYMERIZATION	
	SUSPENSION POLYMERIZATION	
SILICONES	ELASTOMER PRODUCTION	
	HYDROLYSIS (CHLOROSILANES)	
	SILICONE FLUIDS (HYDROLYSIS AND CYCLIZATION)	103,617
	SILICONE RESINS	5,571
	SILICONE RUBBERS	
STYRENE MALEIC ANHYDRIDE RESINS	COPOLYMERIZATION (STYRENE/MALEIC ANHYDRIDE)	
STYRENE-BUTADIENE RESIN	EMULSION POLYMERIZATION	
STYRENE-METHYL METHACRYLATE COPOLYMERS	SUSPENSION POLYMERIZATION	
UNSATURATED POLYESTER RESIN	CONDENSATION (MALEIC AND PHTHALIC ANHYDRIDES/GLYCOLS)	428,611
UREA RESINS	CONDENSATION (UREA/FORMALDEHYDE)	589,896

** figure for sum of PVC + copolymers.

integration is apparent in firms that manufacture a family of related chemicals of similar type or for related markets. Plastic products (SIC 3079), pharmaceuticals (SIC 2834), and pesticides (SIC 2879) are examples of groups of related products.

PRODUCTION AND SALES

The Organic Chemicals and Plastics/Synthetic Fibers (OCPSF) Industries comprise some 1236 plants within the continental United States and Puerto Rico (U.S. Department of Commerce 1980, EIS 1981). These are primary plants, as previously defined. The number of plants increases to 1481 if other producers (secondary producers of scope chemicals represented by the 176 priority OCPSF product/processes) are included (USEPA 1983). Using EPA lists of wastewater discharge permit holders throughout the United States and other surveys, as many as 2,100 Organic Chemicals and Plastics/Synthetic Fibers Industries plants may be obtained. This variance is attributed to the difficulties inherent in segregating the Organic Chemicals and Plastic Synthetic Fibers industries from other chemical producing industries such as petroleum refining and industrial inorganic chemicals, as described in this Section.

Estimates of 1980 sales by subindustry are shown in TABLE III-3. The numbers include secondary as well as captive production (products which are not sold but are used at the plant where produced), and reflect some double counting since certain products are derived from intermediate products that are also included in the total (e.g., 1,2-dichloroethane is included as well as the ethene from which it is produced). Furthermore, the Department of Commerce presents statistics on products or groups of products within a specific use category; often these use categories contain products from more than one SIC Code.

The 1980 production volumes of the 29 organic chemicals included in the Chemical and Engineering News' 1980 Top 50 List of Chemicals are listed in TABLE III-4. TABLE III-5 gives the production volumes of the highest volume products in the plastics and synthetic fibers categories.

It is difficult to define the extent to which establishments belonging to the Organic Chemicals and Plastics/Synthetic Fibers Industries account for the total primary production of the industry, produce secondary products and use similar materials or processes. TABLES III-6 AND III-7 subdivide industry shipments into primary and secondary products and "miscellaneous receipts" and show the amount of a given product class that each industry produced. Table III-6 indicates where the products of the Organic Chemicals Industry are made and what products are made by establishments classified within this industry. Only product groups that have at least $2 million in shipments from establishments classified in this industry are shown. Where some of the primary products are made in industries other than the Organic Chemicals Industry, the value of such shipments is shown in the Other Industries column. Table III-7 similarly indicates where the products of the Plastics/Synthetic Fibers Industries are made and in what proportion products are made by establishments within this industry. Again only product groups with at least $2 million in shipments are shown.

TABLE III-3

NUMBER OF PLANTS AND SALES
IN THE OCPSF INDUSTRIES BY SIC CODE, 1980.

	SIC Code	PRIMARY PRODUCERS Number of Establishments	Sales (billion dollars)
Organic chemicals	2865	198	11.0
	2869	466	43.2
Plastics/ synthetic fibers	2821	488	16.1
	2823	19	1.2
	2824	65	8.7
Total		1236	80.2

Notes: Some plants have operations under more than one SIC code.

SOURCE: Number of establishments: EIS 1981 (Continental United States); U.S. Department of Commerce 1980--1977 Census of Outlying Areas (Puerto Rico).

Sales: U.S. Department of Commerce 1981b.

TABLE III-4

1980 PRODUCTION VOLUME OF
ORGANIC CHEMICALS IN 1980 "TOP 50" LIST

Rank	Chemical	Production (million metric tons)
6	Ethylene	12.50
13	Urea	6.51
14	Propylene	6.22
15	Toluene	5.12
16	Benzene	4.98
17	Ethylene dichloride	4.53
18	Ethylbenzene	3.45
20	Methanol	3.18
21	Styrene	3.13
22	Vinyl chloride	2.93
23	Xylene	2.91
24	Terephthalic acid	2.69
25	Formaldehyde	2.62
27	Ethylene oxide	2.25
28	Ethylene glycol	1.92
30	p-Xylene	1.74
31	Cumene	1.43
32	Butadiene (1,3-)	1.31
33	Acetic acid	1.28
36	Phenol	1.12
38	Acetone	0.96
39	Cyclohexame	0.89
41	Vinyl acetate	0.87
42	Acrylonitrile	0.83
43	Isopropyl alcohol	0.81
44	Propylene oxide	0.80
46	Acetic anhydride	0.67
49	Ethanol	0.55
50	Adipic acid	0.55
Total		78.77

SOURCE: Chemical and Engineering News, June 1981.

TABLE III-5

PRODUCTION VOLUME OF PLASTICS AND SYNTHETIC FIBERS
1980

Resin/Fiber	Production (million (metric tons)
Thermosetting resins	1.86
Phenolic and other tar acid resins	0.68
Polyesters (unsaturated)	0.41
Urea resins	0.53
Epoxies (unmodified)	0.15
Melamine resins	0.08
Thermoplastic resins	11.52
Low-density polyethylene	3.31
Polyvinyl chloride and copolymers	2.48
Polystyrene and copolymers	2.06
High-density polyethylene	2.00
Polypropylene and copolymers	1.66
TOTAL	13.37
Cellulosics	0.37
Rayon	0.22
Acetate	0.15
Noncellulosics	3.97
Polyester	1.81
Nylon	1.07
Glass fiber	0.39
Acrylic	0.35
Olefin	0.34
TOTAL	4.34

SOURCE: Chemical and Engineering News, June 1981.

TABLE III-6

VALUE OF SHIPMENTS FOR THE ORGANIC CHEMICALS INDUSTRY
BY PRODUCT CLASS: 1977 (a)

SIC CODE	PRODUCT GROUP	VALUE OF SHIPMENTS, $ Million: All Industries	Cyclic Crudes and Intermediates (SIC 2865)	Industrial Organic Chemicals, (SIC 2869)	Other Industries
	TOTAL		5,637.0	24,232.8	
	Primary Products		3,699.9	16,238.9	
	Secondary Products		1,769.8	7,327.8	
	Miscellaneous Receipts		167.3	666.1	
2865-	CYCLIC CRUDES AND INTERMEDIATES	5,514.3	3,699.9	1,166.9	647.5(b)
28651	Cyclic intermediates	4,048.4	2,438.4	1,124.1	521.9
28652	Synthetic organic dyes	722.1	595.5	(D)	(D)
28653	Synthetic organic pigments, lakes, and toners	414.5	373.7	(D)	(D)
28655	Cyclic (coal tar) crudes	250.9	(D)	-	(D)
28650	Cyclic crudes and intermediates, n.s.k	42.4	(D)	-	(D)
2869-	INDUSTRIAL ORGANIC CHEMICALS, n.e.c.	19,377.6	(D)	16,238.9	2,400.2(c)
28693	Synthetic organic chemicals, n.e.c.	1,600.5	121.4	1,247.4	231.7
28694	Pesticides and other organic agricultural chemicals	1,474.0	(D)	1,194.0	181.9
28695	Ethyl alcohol and other industrial organic chemicals, n.e.c.	645.9	(D)	541.4	(D)
28696	Miscellaneous end-use chemicals and chemical products, excluding urea	2,070.5	21.4	1,900.5	148.5
28697	Miscellaneous cyclic and acyclic chemicals and chemical products	13,424.7	(D)	11,197.8	1,733.9
28690	Industrial organic chemicals, n.e.c., n.s.k.	162.1	-	157.7	(D)
	OTHER SHIPMENTS BY 4-DIGIT PRODUCT GROUP:				
1321-	Natural gas liquids		-	(D)	
2022-	Cheese, natural and processed		-	(D)	
2035-	Pickles sauces, and salad dressings		-	(D)	
2048-	Prepared feeds, n.e.c.		-	(D)	
2085-	Distilled liquor, except brandy		-	(D)	
2611-	Pulp mills		-	(D)	
2812-	Alkalies and chlorine		(D)	(D)	
2813-	Industrial gases		(D)	(D)	
2816-	Inorganic pigments		66.6	(D)	

TABLE III-6 (continued)

SIC CODE	PRODUCT GROUP	VALUE OF SHIPMENTS, $ Million			
		All Industries	Cyclic Crudes and Intermediates (SIC 2865)	Industrial Organic Chemicals, (SIC 2869)	Other Industries
2819-	Industrial inorganic chemicals, n.e.c.		(D)	(D)	
2821-	Plastics materials and resins		384.4	1,820.4	
2822-	Synthetic rubber		(D)	404.7	
2824-	Organic fibers, noncellulosic		-	(D)	
2831-	Biological products		-	(D)	
2833-	Medicinals and botanicals		(D)	(D)	
2834-	Pharmaceutical preparations		-	(D)	
2842-	Polishes and sanitation goods		(D)	(D)	
2843-	Surface active agents		(D)	251.2	
2844-	Toilet preparations		(D)	(D)	
2851-	Paints and allied products		16.7	(D)	
2861-	Other gum and wood chemicals		-	(D)	
2873-	Nitrogenous fertilizers		(D)	(D)	
2874-	Phosphatic fertilizers		-	(D)	
2879-	Agricultural chemicals, n.e.c.		(D)	(D)	
2891-	Adhesives and sealants		(D)	(D)	
2892-	Explosives		-	(D)	
2893-	Printing ink		(D)	-	
2899-	Chemical preparations, n.e.c.		(D)	198.8	
2911-	Petroleum refining		(D)	1,329.1	
2952-	Asphalt felts and coatings		(D)	-	
2992-	Lubricating oils and greases		-	(D)	
3079-	Miscellaneous plastics products		(D)	(D)	
3291-	Abrasive products		(D)	-	
551-	Food products machinery		-	(D)	
3679-	Electronic components, n.e.c.		(D)	-	
3693-	X-ray, electromedical and electrotherauputic apparatus		-	(D)	
3832-	Optical instruments and lenses		-	(D)	

TABLE III-6 (concluded)

SIC CODE	PRODUCT GROUP	VALUE OF SHIPMENTS, $ Million: All Industries	Cyclic Crudes and Intermediates (SIC 2865)	Industrial Organic Chemicals, (SIC 2869)	Other Industries
	MISCELLANEOUS RECEIPTS:				
93000 00	Contract work		34.0	156.1	
99980 13	Sales of scrap and refuse		(D)	7.3	
99980 41	Receipts for research and developmental work		-	(D)	
99980 98	Other miscellaneous receipts		(D)	(D)	
99989 00	Resales		127.2	496.1	

a. - Represents zero. All other entries represent shipment values of at least two million dollars annually. n.e.c. Not elsewhere classified. (D) Withheld to avoid disclosing operations of individual companies.

b. Other industries and their respective value of shipments in millions of dollars for this industry include:

2812	Alkalies and chlorine	(D)	2834	Pharmaceutical preparations	(D)
2816	Inorganic Pigments	(D)	2843	Surface active agents	(D)
2819	Industrial inorganic chemicals, n.e.c.	53.8	2873	Nitrogenous fertilizers	(D)
2821	Plastics materials and resins	110.2	2879	Agricultural chemicals, n.e.c.	(D)
2824	Organic fibers, noncellulosic	(D)	2911	Petroleum refining	110.2

c. Other industries and their respective value of shipment in millions of dollars for this industry include:

2046	Wet corn milling	(D)	2843	Surface active agents	(D)
2812	Alkalies and chlorine	(D)	2844	Toilet preparations	(D)
2816	Inorganic pigments	(D)	2873	Nitrogenous fertilizers	165.4
2819	Industrial inorganic chemicals, n.e.c.	163.1	2879	Agricultural chemicals, n.e.c.	(D)
2821	Plastics materials and resins	(D)	2891	Adhesives and sealants	27.8
2822	Synthetic rubber	108.8	2899	Chemical preparations, n.e.c.	(D)
2823	Cellulosic manmade fibers	(D)	2911	Petroleum refining	241.8
2824	Organic fibers, noncellulosic	(D)	3011	Tires and inner tubes	(D)
2833	Medicinals and botanicals	(D)	3079	Miscellaneous plastics products	(D)
2834	Pharmaceutical preparations	(D)	3861	Photographic equipment and supplies	(D)
2841	Soap and other detergents	(D)	3999	Manufacturing industries, n.e.c.	(D)
2842	Polishes and sanitation goods	(D)			

SOURCE: U. S. Department of Commerce 1981a.

TABLE III-7

VALUE OF SHIPMENTS FOR THE PLASTICS/SYNTHETIC FIBERS INDUSTRY BY PRODUCT CLASS: 1977(a)

SIC CODE	PRODUCT GROUP	VALUE OF SHIPMENTS, $ Million				
		All Industries	Plastics Materials and Resins (SIC 2821)	Cellulosic Manmade Fibers (SIC 2823)	Organic Fibers, Noncellulosic (SIC 2824)	Other Industries
	TOTAL		10,818.2	998.9	6,379.8	
	Primary Products		8,967.8	(D)	5,308.7	
	Secondary Products		1,588.5	(D)	1,002.4	
	Miscellaneous Receipts		261.9	(D)	68.7	
2821-	PLASTICS MATERIALS AND RESINS	12,181.1	8,967.8	-	(D)	2,879.5(b)
28213	Thermoplastic resins and plastics materials	9,897.7	7,367.0	-	(D)	2,223.6
28214	Thermosetting resins and plastics materials	2,226.7	(D)	-	-	(D)
28210	Plastics materials and resins, n.s.k.	56.7	(D)	-	-	(D)
28233	Rayon and acetate fiber	851.1	-	(D)	(D)	-
2824-	ORGANIC FIBERS, NONCELLULOSIC	5,471.5	(D)	(D)	5,308.7	(D)(c)
28241	Nylon fibers, except producer textured	1,962.9	-	-	(D)	(D)
28243	Acrylic and modacrylic fibers, except textured	495.8	-	(D)	(D)	-
28244	Polyester fibers, except producer textured	1,938.6	-	(D)	1,809.9	(D)
28245	Other noncellulosic manmade fibers, except producer textured	178.2	(D)	(D)	168.0	(D)
28246	Producer textured manmade fibers, group filament	890.6	-	-	890.6	-
28240	Organic fibers, noncellulosic, n.s.k.	5.4	-	-	(D)	(D)
	OTHER SHIPMENTS BY 4-DIGIT PRODUCT GROUP:					
2281-	Yarns, except wool		-	-	(D)	
2295-	Coated fabrics, not rubberized		(D)	-	-	
2297-	Nonwoven fabrics		-	-	(D)	
2298-	Cordage and twine		(D)	-	-	
2299-	Textile goods, n.e.c.		-	-	(D)	
2621-	Paper mill products, except building paper		(D)	-	-	
2649-	Converted paper products, n.e.c.		(D)	-	-	
2812-	Alkalies and chlorine		(D)	-	-	
2813-	Industrial gases		(D)	-	-	

TABLE III-7 (continued)

SIC CODE	PRODUCT GROUP	VALUE OF SHIPMENTS, $ Million				
		All Industries	Plastics Materials and Resins (SIC 2821)	Cellulosic Manmade Fibers (SIC 2823)	Organic Fibers, Noncellulosic (SIC 2824)	Other Industries
2819-	Industrial inorganic chemicals, n.e.c.		(D)	(D)	(D)	
2822	Synthetic rubber (vulcanizable elastomers)		85.9	1,670.3	-	-
2833-	Medicinals and botanicals		(D)	-	-	
2841-	Soap and other detergents		(D)	-	-	
2843-	Surface active agents		(D)	(D)	-	
2851-	Pains and allied products		28.2	-	-	
2861-	Gum and wood chemicals		(D)	-	-	
2865-	Cyclic crudes and intermediates		110.2	-	(D)	
2869-	Industrial organic chemicals, n.e.c.		(D)	(D)	(D)	
2873-	Nitrogenous fertilizers		(D)	-	-	
2879-	Agricultural chemicals, n.e.c.		(D)	-	-	
2891-	Adhesives and sealants		67.5	-	(D)	
2899-	Chemical preparations, n.e.c.		67.5	-	-	
2911-	Petroleum refining products		(D)	-	(D)	
3079-	Miscellaneous plastics products		406.2	(D)		
3231-	Products of purchased glass		(D)	-	-	
3861-	Photographic equipment and supplies		-	(D)	-	
	MISCELLANEOUS RECEIPTS:					
93000 00	Contract work		48.2	(D)	(D)	
99980 13	Sales of scrap		(D)	(D)	(D)	
99980 41	Receipts for research and development work		(D)	-	-	
99980 98	Other miscellaneous receipts		40.5	(Z)	(D)	
99989 00	Resales		168.8	(D)	62.7	

a. - Represents zero. All other entries represent shipment values of at least two million dollars annually.
n.e.c. Not elsewhere classified. (D) Withheld to avoid disclosing operations of individual companies.
(Z) Less than 50 thousand dollars or hours; under 50 employees.

TABLE III-7 (concluded)

b. Other industries and their respective value of shipments in millions of dollars for this industry include:

2812	Alkalies and chlorine	108.6	2879	Pesticides and agricultural chemicals, n.e.c.	(D)
2819	Industrial inorganic chemicals, n.e.c.	(D)	2891	Adhesives and sealants	38.7
2843	Surface active agents	17.8	2892	Explosives	(D)
2851	Paints, varnishes, lacquers, enamels, and allied products	137.7	2899	Chemical preparations, n.e.c.	41.0
2861	Gum and wood chemicals	24.1	2911	Petroleum refining	(D)
2865	Cyclic crudes and intermediates	384.4	3079	Miscellaneous plastics products	92.0
2869	Industrial organic chemicals, n.e.c.	1,820.4	3229	Pressed and blown glass, n.e.c.	(D)

c. Other industries with over $5 million shipment of primary products include: Thread mills (2284); and Industrial organic chemicals, N.E.C. Production data are unavailable to avoid disclosing operations of individual companies.

SOURCE: U. S. Department of Commerce 1981a

TABLE III-8, calculated from data shown in Tables III-6 and III-7, summarizes the distribution among the subindustries of the Organic Chemicals and Plastics/Synthetic Fibers Industries. Although the degree of specialization varies widely among individual subindustries, the two industries each receive relatively little revenue from products other than those defined as primary.

GEOGRAPHIC DISTRIBUTION

TABLE III-9 presents plant distribution by state while FIGURE III-3 shows the distribution of plants within the states. Most organic chemical plants are located in coastal regions or on waterways near either sources of raw materials (especially petrochemicals) or transportation centers. Plastics/synthetic fibers industry plants are generally located near organic chemicals plants to minimize costs of monomer feedstock transportation. However, a significant number of plastic plants are situated near product markets (i.e., large population centers) to minimize costs of transporting the products to market.

PLANT SIZE

Although plant size may be defined in many ways, including number of employees, number of product/processes, plant capacity, production volume, and sales volume, none of these factors alone is sufficient to define plant size; each is discussed in this section. Perhaps the most obvious definition of plant size would be the number of workers employed. However, continuous process plants producing high volume commodity chemicals typically employ fewer workers per unit of production than do plants producing specialty (relatively low volume) chemicals. For example, the total employment of the Organic Chemicals Industry and the total employment of the Plastics/Synthetics Industry are about the same (148,000 v. 147,000), but the production of the Organics industry is about five times that of the Plastics/Synthetics Industry.

Plant size may also be expressed in terms of the number of product/processes which are operated at a plant. Analysis of the number of product/processes for 551 plants in the edited 308 database is presented in FIGURE III-4. This database consists of the 291 direct and indirect discharge plants in the 308 Summary database and an additional 260 indirect discharge plants included in the 308 Survey. Most plants (90%) in the Organic Chemicals Industry have 10 or fewer product/processes, with a fairly even distribution among plants with one to ten product/processes. In contrast, the majority of plastics plants (76%) within the Plastics/Synthetic Fibers Industry have only one or two product/processes; no plastics plant has more than 10 product/processes. Integrated plants (plants which produce both organic chemicals and plastic products) typically have far more product/processes. Over 50% of the plants have five to ten product/processes; five percent of integrated plants have as many as 30 product/processes.

Plant capacity is defined as the maximum production of a given product/process per unit time. Neither production volume nor plant capacity clearly defines plant size. Plants continuously producing high-volume chemicals (generally

TABLE III-8

THE ORGANIC CHEMICALS AND PLASTICS/SYNTHETIC FIBERS INDUSTRIES
BY PRIMARY PRODUCT SPECIALIZATION (a, b)

SIC CODE	PRODUCT GROUP	PERCENT OF TOTAL VALUE OF SHIPMENTS					
		OCPSF Industries	Cyclic Crudes and Intermediates (SIC 2865)	Industrial Organic Chemicals, (SIC 2869)	Plastics Materials and Resins (SIC 2821)	Cellulosic Manmade Fibers (SIC 2823)	Organic Fibers, Noncellulosic (SIC 2824)
	ORGANIC CHEMICALS						
2865-	CYCLIC CRUDES AND INTERMEDIATES	90	67	21	2	-	(D)
2869-	INDUSTRIAL ORGANIC CHEMICALS, n.e.c.(c)	84	(D)	84	(D)	(D)	(D)
	PLASTICS AND SYNTHETIC FIBERS						
2821-	PLASTICS MATERIALS AND RESINS	92	3	15	74	-	(D)
2823-	CELLULOSIC MANMADE FIBERS	100	-	-	-	100	-
2824-	ORGANIC FIBERS, NONCELLULOSIC	97	-	(D)	-	97	(D)

a. Primary products are those products which define the industry (see text and Figure III-1).

b. - = Represents zero. All other entries represent shipment values of at least two million dollars annually.
(D) = Withheld to avoid disclosing operations of individual companies.

c. n.e.c. Not elsewhere classified.

SOURCE: U.S. Department of Commerce 1981a.

TABLE III-9

PLANT DISTRIBUTION BY STATE

	PRIMARY PRODUCERS						
	Organic Chemicals Industry			Plastics and Synthetic Fibers Industry			
	SIC Code			SIC Code			
STATE	2865	2869	Total	2821	2823	2824	Total
Alabama	4	5	9	7	1	2	10
Alaska	0	1	1	0	0	0	0
Arizona	0	1	1	1	0	0	1
Arkansas	1	3	4	5	0	1	6
California	6	30	36	45	0	1	46
Colorado	1	4	5	3	0	0	3
Connecticut	0	8	8	11	0	3	14
Delaware	1	5	6	12	0	1	13
Florida	3	6	9	7	0	2	9
Georgia	1	6	7	7	1	5	13
Hawaii	0	0	0	0	0	0	0
Idaho	0	0	0	0	0	0	0
Illinois	12	32	44	28	1	1	30
Indiana	4	4	8	7	1	1	9
Iowa	0	2	2	4	0	0	4
Kansas	2	3	5	1	0	0	1
Kentucky	2	8	10	5	0	0	5
Louisiana	3	33	36	10	0	0	10
Maine	0	0	0	1	0	0	1
Maryland	0	4	4	3	1	1	5
Massachusetts	7	14	21	32	0	2	34
Michigan	3	16	19	16	1	0	17
Minnesota	1	3	4	3	0	0	3
Missouri	1	7	8	8	0	0	8
Mississippi	3	1	4	6	0	1	7
Montana	0	1	1	1	0	0	1
North Carolina	12	11	23	12	0	11	23
North Dakota	0	0	0	0	1	0	1
Nebraska	0	2	2	0	0	0	0
New Hampshire	1	2	3	4	0	0	4
New Jersey	48	67	115	60	1	1	62
New Mexico	0	1	1	0	0	0	0
Nevada	0	2	2	1	0	0	1
New York	10	27	37	24	1	1	26
Ohio	18	19	37	43	2	1	46
Oklahoma	0	2	2	5	0	0	5

TABLE III-9 (concluded)

	PRIMARY PRODUCERS						
	Organic Chemicals Industry			Plastics and Synthetic Fibers Industry			
	SIC Code			SIC Code			
STATE	2865	2869	Total	2821	2823	2824	Total
Oregon	0	4	4	4	0	0	4
Pennsylvania	12	21	33	31	2	0	33
Puerto Rico	3	9	12	4	0	3	7
Rhode Island	5	6	11	1	0	0	1
South Carolina	10	9	19	5	1	15	21
South Dakota	0	0	0	0	0	0	0
Tennessee	1	5	6	7	2	4	13
Texas	17	57	74	35	0	0	35
Utah	1	0	1	2	0	0	2
Virginia	1	4	5	5	2	7	14
Vermont	0	0	0	1	0	0	1
Washington	2	4	6	5	1	0	6
Wisconsin	0	6	6	9	0	0	9
West Virginia	1	11	12	7	0	1	8
Wyoming	1	0	1	0	0	0	0
TOTAL	198	466	664	488	19	65	572

SOURCE: EIS 1981 (Continental United States); U.S. Department of Commerce 1980 (Puerto Rico).

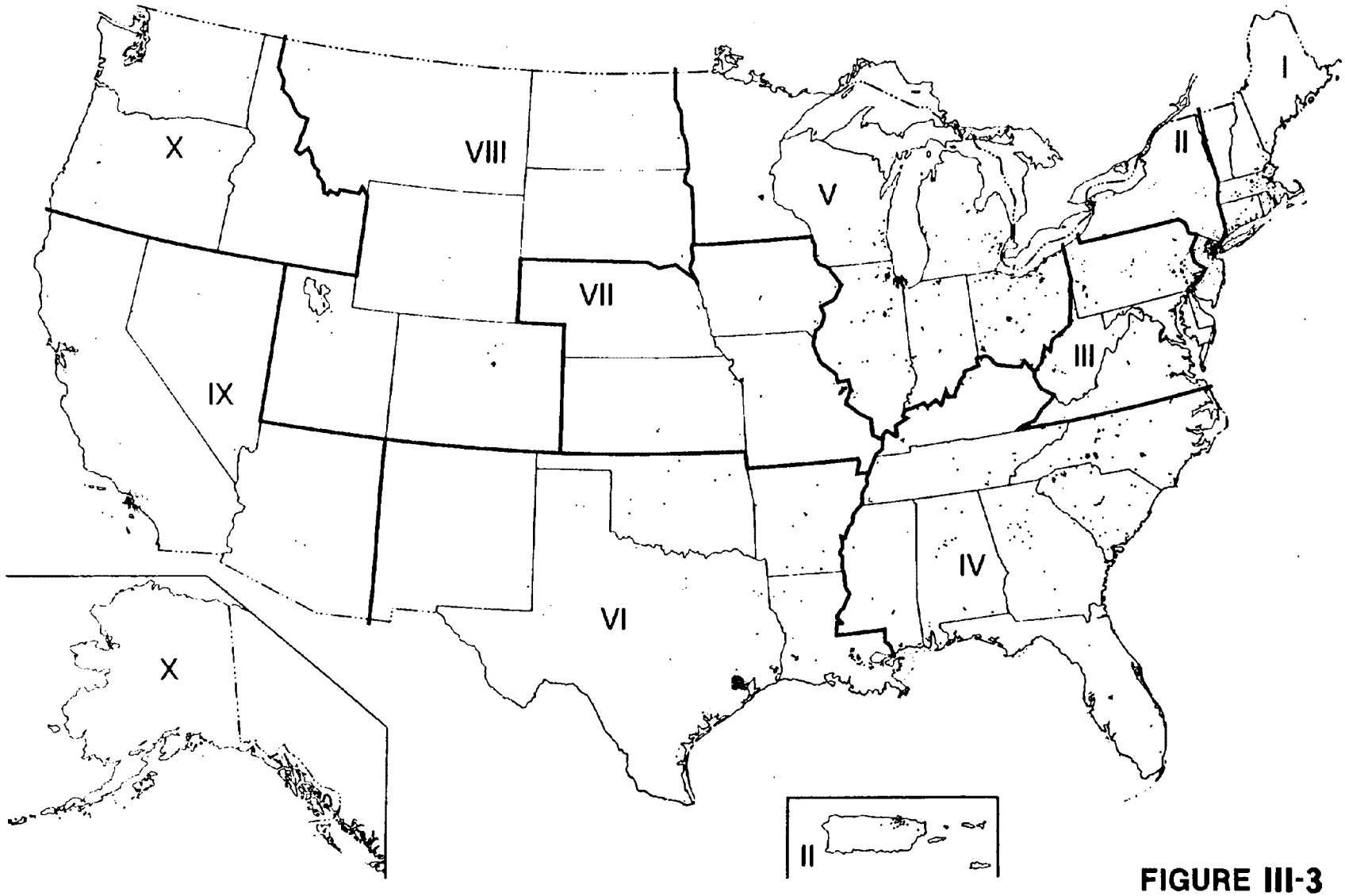

FIGURE III-3
PLANT DISTRIBUTION BY GEOGRAPHIC LOCATION

FIGURE III-4 NUMBER OF PRODUCT/PROCESSES BY PLANT

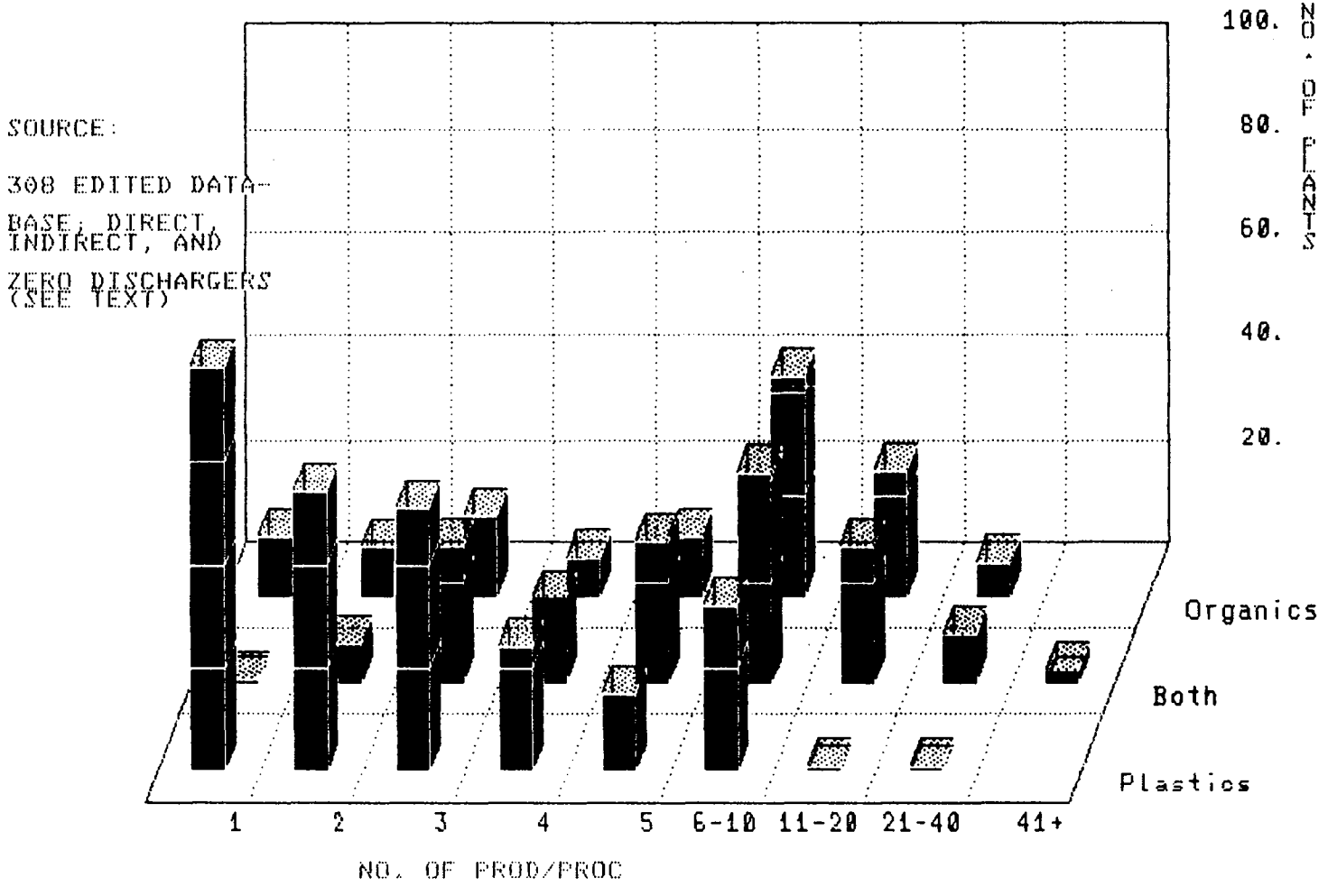

employing relatively few workers), may be physically smaller than plants producing specialty chemicals by batch processes. High volume commodity chemicals are typically less expensive than specialty chemicals. Sales volume therefore does not correlate directly with plant employment or production volume. FIGURES III-5 and III-6 illustrate the plant distribution of the Organic Chemicals and Plastics/Synthetic Fibers Industries by number of employees and sales volume, respectively.

PLANT AGE

The ages of plants within the Organic Chemicals and Plastics/Synthetic Fibers Industries are difficult to define since the plants are generally made up of more than one process unit, each designed to produce different products. As the industry introduces new products and product demand grows, process units are added to a plant. It is not clear which process should be chosen to define plant age. Typically, the oldest process in current operation is used to define plant age. Information concerning plant age is not available in the general trade literature and has been compiled from the 308 Summary Database for direct and zero discharge plants. Two-hundred eighty-two of the 291 plants in the 308 Summary Database provided information on plant age. FIGURE III-7 illustrates the age (as defined above) of manufacturing facilities within these industries.

FIGURE III-5
PLANT DISTRIBUTION BY NUMBER OF EMPLOYEES

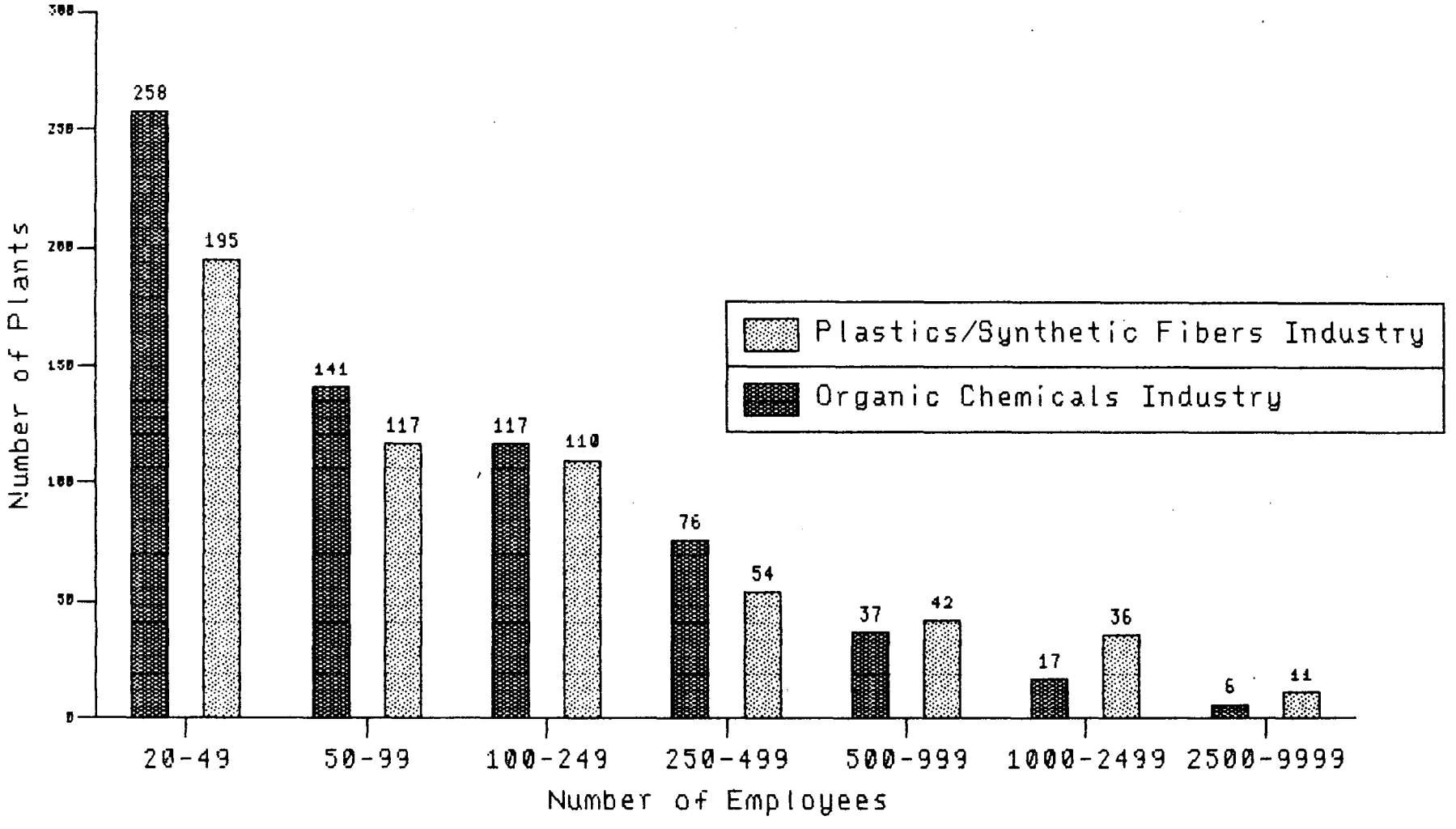

SOURCE: EIS 1981

FIGURE III-6
PLANT DISTRIBUTION BY SALES VOLUME

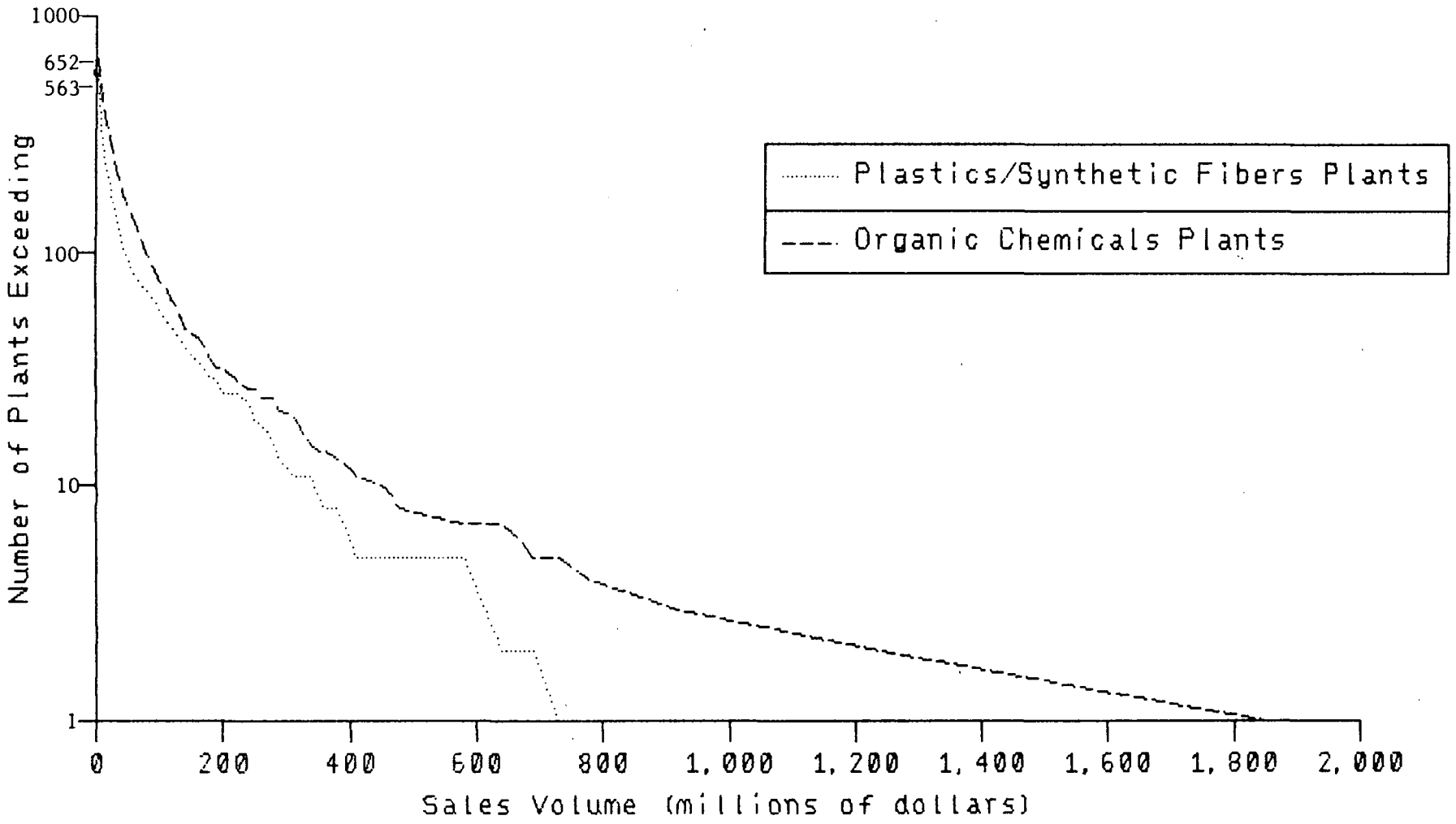

SOURCE: EIS 1981

FIGURE III-7
PLANT AGE OF THE ORGANIC CHEMICALS
AND PLASTICS/SYNTHETIC FIBERS INDUSTRIES

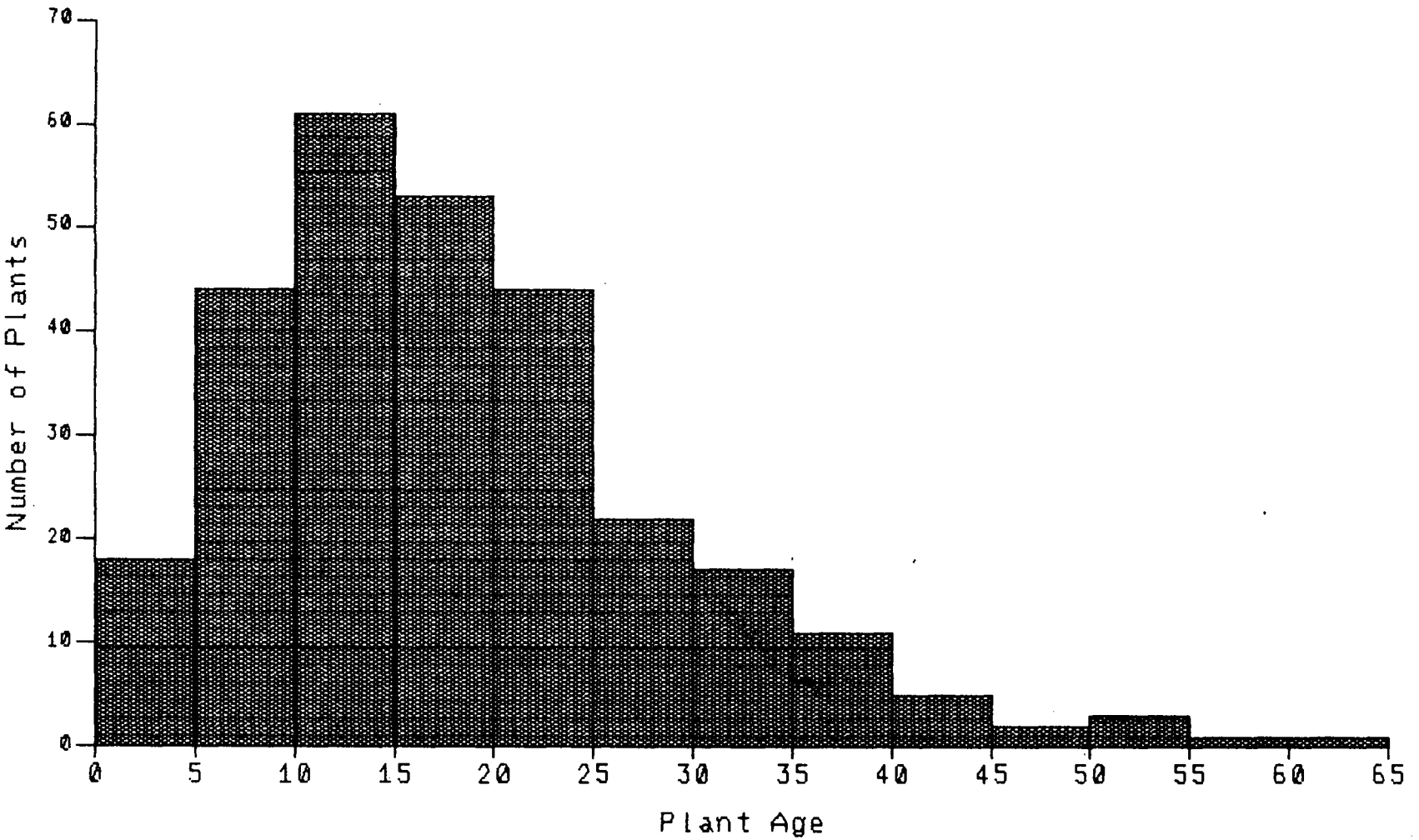

SOURCE: 308 Summary Database; Direct and Zero discharge plants only.

REFERENCES

CHEMICAL AND ENGINEERING NEWS. 1981. 59:37

ECONOMIC INFORMATION SYSTEMS, INC. (EIS). 1981. EIS Industrial Plants Database, Dialog Information Retrieval Service, Lockheed Information Services. March 1981.

SHREVE, R.N., and BRINK, J.A. 1977. Chemical Process Industries. 4th ed. McGraw-Hill, New York.

U.S. DEPARTMENT OF COMMERCE. 1980. 1977 Economic Census of Outlying Areas: Puerto Rico and U.S. Virgin Islands. Bureau of the Census. OAC-77-4 and 5

U.S. DEPARTMENT OF COMMERCE. 1981a. 1977 Census of Manufacturers. Volume II Industry Statistics. Part 2. SIC Major Groups 27-34. Washington, D.C.

U.S. DEPARTMENT OF COMMERCE. 1981b. 1981 U.S. Industrial Outlook. Bureau of Industrial Economics. Washington, D.C.

U.S. ENVIRONMENTAL PROTECTION AGENCY (USEPA). 1983. Economic Analysis of Proposed Effluent Standards and Limitations for the Organic Chemicals and Plastics, Synthetics, and Fibers Industries. EPA 440/2-83-004

SECTION IV

SUBCATEGORIZATION OF THE ORGANIC CHEMICALS AND PLASTICS/SYNTHETIC FIBERS INDUSTRIES

INTRODUCTION

Section 304(b)(2)(B) of the Clean Water Act requires EPA to consider certain factors in determining best available technology limitations. Factors to be considered include: the age of equipment and facilities involved; the process employed; the engineering aspects of the application of various types of control techniques; process changes; the cost of achieving such effluent reduction; non-water quality environmental impact (including energy requirements); and such other factors as the Administrator deems appropriate. The purpose of such consideration is to determine whether these industries (or segments of these industries) exhibit unique wastewater characteristics which support the development of separate national effluent limitations guidelines. Thus major industry groups may require division into smaller homogeneous groups that account for the individual characteristics of different facilities.

In order to consider subcategorization on the basis of the factors listed above, it is necessary to demonstrate that significant differences among the plant wastewater quality or that differences in the treatability of plant wastewaters exist. The Organic Chemicals and Plastics/Synthetic Fibers Industries (OCPSF) might be subcategorized into groups with significant differences in terms of influent and effluent quality based on the following factors:

- Engineering aspects of control technologies;
- Facility size (as measured by plant production and/or sales);
- Geographical location;
- Age of equipment and facilities;
- Cost of achieving effluent reduction;
- Nonwater quality environmental impacts;
- Processes employed and process changes.

The Organic Chemicals and Plastics/Synthetic Fibers Industries are recognized as separate industries within the U. S. economy; however, vertical integration of plants within these industries is common, blurring distinctions between organic chemical plants and plastics/synthetic fibers plants. As a practical matter, the OCPSF is divided among three types of plants:

- Plants manufacturing only organic chemicals.

- Plants manufacturing only plastics and synthetic materials.

Integrated plants manufacturing both organic chemicals and plastics and synthetic materials at the same facility.

Most importantly, this distinction is also reasonable from the viewpoint of wastewater generation. Chemical plants manufacturing only organic chemicals are predicted to have higher raw waste concentrations (i.e., influents to wastewater treatment systems) of organic priority pollutants than facilities manufacturing plastics/synthetics fibers only, with combined plants lying between these two groups. This is empirically substantiated by the data collected by EPA. TABLE IV-1 shows the mean concentrations of priority pollutant groups (organics vs. metals) in raw wastewaters for facilities manufacturing organic chemicals only, plastics/synthetic fibers only, and integrated organic and plastics plants. As can be seen, the mean influent concentrations of the organic priority pollutant fractions are considerably less for plastics/synthetic fibers plants (i.e., have a cleaner influent) than the other two groups. Only the metal fraction is of higher concentration for plastics/synthetic fibers plants. Similarly, FIGURE IV-1 illustrates the average influent concentrations of Plastics-Only and Not Plastics-Only plants by pollutant. The differences in types of pollutants regulated, effluent levels achievable, and/or costs to reach that level result in a proposal that plants within these industries be placed in one of two categories: plants which manufacture plastics and synthetic fibers only (Plastics-Only Plants); and plants that manufacture both plastic materials and organic chemicals (Not Plastics-Only Plants).

METHODOLOGY

In the interest of consistency and simplicity, the Agency sought a BAT subcategorization scheme which was similar to the proposed BPT subcategorization. The Agency's approach presumes that radically different subcategories for BPT and BAT would not be useful to either industry or the permit authorities. Two substantially different subcategorization schemes for BPT and BAT would complicate the process of implementing and applying both sets of effluent guidelines at a specific plant. Therefore, the Agency chose as a basis for its BAT subcategories the two major categories of plants in the BPT subcategories: Plastics-Only and Not Plastics-Only.

The subcategorization proposed for these industries is based primarily upon the priority pollutants detected or likely to be present in their wastewaters. The engineering analysis therefore considered the relative treatability of the waste streams generated by the Plastics-Only and Not Plastics-Only subcategories. This analysis considered the applicability of the following major treatment units: equalization, sedimentation, steam stripping, precipitation and coagulation, carbon adsorption, biochemical oxidation, and filtration. The data upon which this analysis is made includes Phase I and II Screening data, Verification data, and CMA/EPA Five-Plant data within the Organic Chemicals and Plastics/Synthetic Fibers Industries.

Statistical analyses were performed to determine whether priority pollutant data supported the conclusions of engineering analyses. As in BPT, a nonparametric test procedure (the Terry-Hoeffding test) was used to compare

TABLE IV-1

MEAN CONCENTRATIONS OF PRIORITY POLLUTANT GROUPS BY PLANT TYPE

PLANT TYPE	NUMBER OF PLANTS	MEAN INFLUENT CONCENTRATION, µg/l All Organic Priority Pollutants	Priority Pollutant Metals
Organic Chemical Plants	12	11,400	230
Plastic and Synthetic Fibers Plants	8	260	12,000
Organic and Plastics Plants	31	1,900	5,500

FIGURE IV-1

AVERAGE INFLUENT CONCENTRATION OF ORGANIC POLLUTANTS

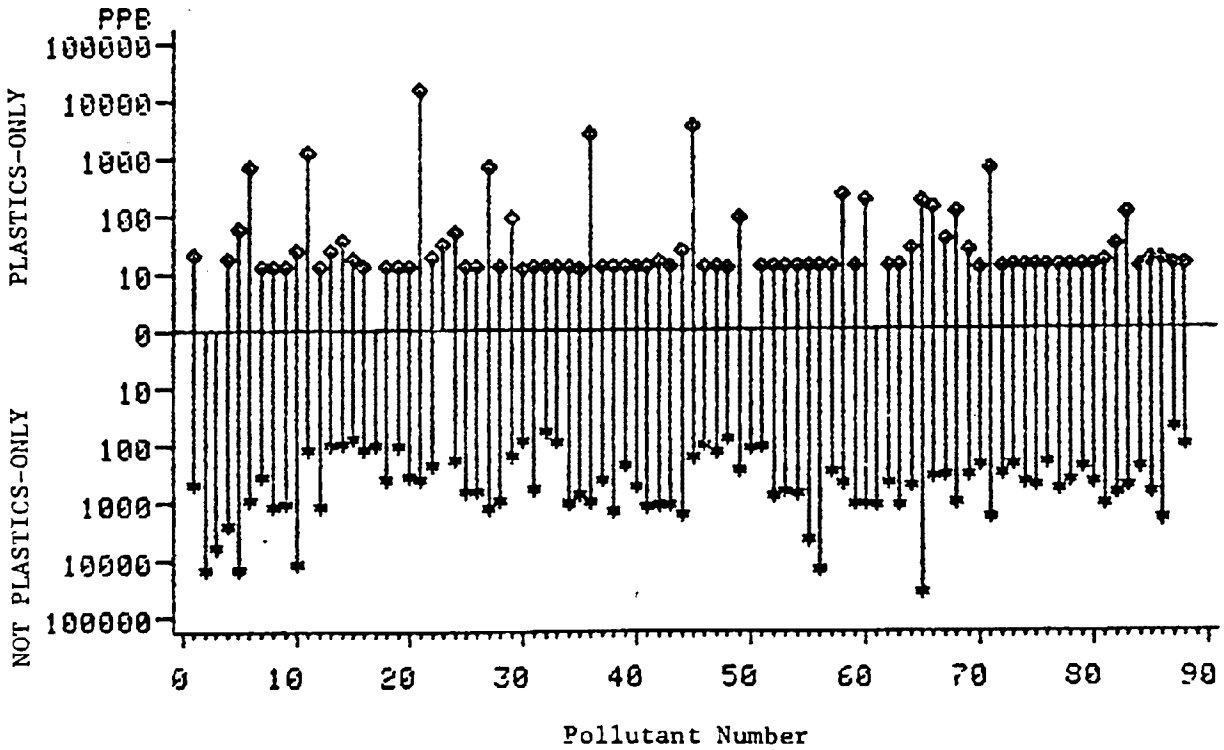

NOTE: Screening data used.

Influent concentrations less than or equal to 10 ppb deleted.

Excludes pesticides (pollutant numbers 89 through 113) and dioxin.

median pollutant levels of different types of plants (e.g., Plastics-Only vs. Not Plastics-Only plants). A statistically significant test result implied that there were differences in influent quality between groups of plants that suggested a need for subcategories.

Unlike the BPT analysis, the Terry-Hoeffding test was not applied directly to pollutant concentrations of different plants one pollutant at a time. Such analyses would have been inefficient and difficult to interpret because there were measurements on over 100 pollutants, the measurements on some groups of pollutants were highly correlated, and measurements of some pollutants showed little plant-to-plant variation. Therefore the Agency decided to focus on pollutants or pollutant groups exhibiting the most plant-to-plant variation. This was accomplished through a preliminary data reduction step that grouped pollutants by defining weighted averages of pollutant levels through a multi-variate statistical procedure called principal component analysis (this analysis is described briefly below). The comparisons of groups of plants via the Terry-Hoeffding test were based on these new weighted average or aggregate pollutant variables.

To perform the BAT subcategorization analyses, the Agency utilized the influent data available from the Phase I and Phase II Screening studies. These data were used because they provided a broad assessment of the presence of priority pollutants at OCPSF plants. In the data reduction step, these data covered 143 plants. Fewer plants were included in some of the plant-group comparisons, however, because of inability to identify the group to which some plants belonged. Data for organic priority pollutants in the acid, base/neutral, and volatile fractions and for metals and cyanide were included in the analyses.

The principal component analysis effectively reduced the large set of original pollutant-specific variables to a smaller number of aggregated new variables which were uncorrelated and accounted for a large portion of the variability in the original pollutant data. This data reduction procedure was performed separately on the 88 organic priority pollutants and on metals/cyanide because of differences in analytical methods for the two groups of pollutants. Each principal component or aggregate pollutant variable, Y, had the form

$$Y = \Sigma\ a_i X_i,$$

where a_i was a numeric weight determined by the correlation structure of the original data, and X_i represented the level of pollutant i. The a_i weights assigned to a given pollutant differed for each principal component.) Typically, the utility of principal component analysis is evaluated by comparing the sum of the variances of the aggregate variables to the sum of the variances of the original variables. In the BAT analysis, five principal components accounted in this sense for 74 and 78 percent, respectively, of the variation in the original organics and metals/cyanide data. Morrison (1976) suggests that up to five principal components be retained for subsequent analysis if they account for 75 percent of the variation. Therefore, the Agency believes that statistical comparisons of subcategories based on the more manageable set of five aggregated pollutant variables is a reasonable practical alternative to one pollutant at a time analyses. Further details on the principal component analysis are provided in Appendix F.

Subsequently, each of the five principal components was evaluated for each plant by substituting measured pollutant concentrations for that plant into the appropriate weighted average formulas. Then statistical subcategorization analyses were performed by using the Terry-Hoeffding test (or a generalization of it) to compare median principal component scores of plants in different groups. The first step in the analysis compared Plastics-Only and Not Plastics-Only plants. The tests showed statistical differences (probability less than 0.001) between these plant groups for the first and fifth principal components for organics, i.e., they showed that Plastics-Only plants had lower aggregate organic pollutant levels than other plants. No significant differences were found for the five metals/cyanide principal components.

Further tests were performed to investigate whether differences existed between Not Plastics-Only plants if they were further subcategorized into Organics Only and Integrated (mixed organics/plastics) plants, or into the three process-related BPT subcategories (Type I with oxidation, Type I without oxidation, and Not Type I). No significant differences were found for either the organics or the metals/cyanide principal components. Thus these statistical analyses provided no evidence that further subcategorization of Not Plastics-Only plants was necessary.

Based on the results of the engineering and statistical analyses, the Agency concluded that Plastics-Only and Not Plastics-Only subcategories are needed. Details of the statistical subcategorization analysis are provided in Appendix F. Details of the engineering analyses are discussed in the remainder of this section.

ENGINEERING ASPECTS OF CONTROL TECHNOLOGIES (TREATABILITY)

The selection of a treatment train for OCPSF Industries wastewaters is done on a plant-by-plant basis. The selection is based on the desired effluent quality and thermodynamic properties of the waste stream contaminants. While the different product/process mixes which exist at individual plants are unique and result in process waste streams of widely varying quality, priority pollutant wasteloads are treatable by commonly employed physical-chemical and biological unit operations (see Sections VII and IX).

Typically, the treatability of a waste stream is described in terms of its biodegradability, as biological treatment usually provides the most cost-effective means of treating a high volume, high (organic) strength industrial waste (i.e., minimum capital and operating costs). Furthermore, biodegradability serves as an important indicator of the toxic nature of the waste load upon discharge to the environment. Aerobic (oxygen-rich) biological treatment processes achieve accelerated versions of the same type of biodegradation that would occur much more slowly in the receiving water. These treatment processes accelerate biodegradation by aerating the wastewater to keep the dissolved oxygen concentration high and recycling microorganisms to maintain extremely high concentrations of bacteria, algae, fungi and protozoa in the treatment system. Certain compounds which resist biological degradation in natural waters may be readily oxidized by a microbial population adapted to the waste. As would occur in the natural environment,

organic compounds may be removed by volatization (e.g., aeration) and adsorption on solid materials (e.g., sludge) during biological treatment.

One of the primary limitations of biological treatment of wastewaters from the Organic Chemicals and Plastics/Synthetic Fibers Industries is the presence of both refractory (difficult to treat) compounds as well as compounds which are toxic or inhibitory to biological processes. Compounds oxidized slowly by microorganisms can generally be treated by subjecting the wastewater to biological treatment for a longer time; thereby increasing the overall conventional and toxic pollutant removals. Lengthening the duration of treatment however requires larger treatment tanks and more aeration, both of which add to the expense of the treatment. Alternatively, pollutants that are refractory, toxic, or inhibitory to biological process can be removed prior to biological treatment of wastewaters. Removal of pollutants prior to biological treatment is known as pretreatment.

The successful treatment of wastewaters of the OCPSF industries primarily depends on effective physical-chemical pretreatment of wastewaters, the ability to acclimate biological organisms to the remaining pollutants in the waste stream (as in activated sludge processes), the year-round operation of the treatment system at an efficient removal rate, the resistance of the treatment system to toxic or inhibitory concentrations and the stability of the treatment system during variations in the waste loading (i.e., changes in product mixes). The following sections discuss briefly both biological and physical-chemical treatment technologies.

Biological Treatment of Wastewaters

In general aerobic bacteria are responsible for the biodegradation of synthetic organic chemicals, employing most of the sequences and cycles which occupy a central position in metabolic pathways and which are found in other living organisms. Their unique biochemical asset is an ability to catalyze early steps in degradation that other organisms cannot, thereby forming metabolites that can enter the common pathways of metabolism (e.g., the Krebs cycle or the fatty acid "spiral"; Dagley 1975).

Microorganisms able to utilize organic compounds for growth do so by degradation into simpler compounds which are central to the processes of intermediary metabolism before synthesis of cell constituents can occur. Sufficient energy for synthesis is derived by complete oxidation of the remainder to carbon dioxide and water. As many of the chemical products produced by the Organic Chemicals and Plastics/Synthetic Fibers Industries do not bear close structural similarity to intermediary metabolites found within common pathways of metabolism, such compounds often require extensive structural modification before they can enter central metabolic schemes. However, microorganisms capable of producing the necessary enzymes for such structural modifications are numerous and widespread.

Thus, whether a man-made chemical will be biodegradable is largely dependent on two factors:

(1) The ability of microbial enzymes to accept substrate compounds, with structures similar to, but not identical with, chemicals found in nature (i.e., the lack of substrate specificity).

(2) The ability of novel substrates to induce or derepress the synthesis of the necessary degradative enzyme in the microorganisms.

These two factors are mechanisms for acclimation - the process by which microorganisms learn to degrade new chemicals. While there are a great number of factors affecting the degradation or lack of degradation in a given system, these factors may be aggregated under three broad parameters:

- The structure of the compound. Presence or absence of certain moieties and substituents; steric factors, molecular size or other structural features.

- Available microorganisms. Types and number of microorganisms; presence of available or inducible enzymes.

- The environment. Temperature, pH, presence or absence of oxygen, nutrients, light.

Chemical structure may effect the biodegradation of a compound in two principal ways. First, the molecule may possess groups or substituents which cannot react with available or inducible enzymes (e.g., carbon-fluorine bonds are difficult to break). Secondly, the structure may determine the compound to be in a physical state, (e.g., absorbed onto particulate matter, or in the gas phase) where microbial degradation does not easily occur. For example, oils and fats typically have very low solubilities in water and strongly adsorb to carbon-containing particulate matter. For this reason, such pollutants are removed in pretreatment trains. When present in a biological system, such pollutants are more likely to be removed via adsorption onto sludge than biodegraded.

Few known correlations of structure to biodegradation are valid for a variety of chemical compound types although a number of biodegradability relationships for compounds have been established within narrowly defined structural groups. Since biodegradation of organic compounds occurs by biochemical oxidation, compounds containing carbon-oxygen bonds are more amenable to degradation then those compounds that do not. This and other relationships between structure and biodegradability which seem generally established are outlined in TABLE IV-2. In general, those compounds less amenable to biodegradation as shown in Table IV-2 require physical-chemical pretreatment.

Basic environmental conditions (i.e., proper microbial conditions) should be optimized to enhance biodegradation in well operated biological treatment trains. Biological treatment units are operated to provide oxygen and nutrients and control pH to provide optimum growth conditions. Furthermore biological processes (e.g., activated sludge, aerated lagoon systems,

TABLE IV-2

INFLUENCE OF STRUCTURE ON DEGRADABILITY

Type of Compounds or Substituents	More Degradable	Less Degradable
Hydrocarbons	Higher alkanes (~ 12) Alkanes Straight-chain paraffinic Paraffinic Mono- and bicyclic aromatic	Lower alkanes High molecular weight alkanes Branched-chain paraffinic Aromatic Polycyclic aromatic
Aromatic substituent	—OH —COOH —NH_2 —OCH_3	—F —Cl —NO_2 —SO_3H
Aliphatic chlorine	—Cl more than six carbon atoms from terminal C	—Cl six or less carbon atoms from terminal C

Source: Hutzinger and Veerkamp (1981).

trickling filters, oxidation stabilization ponds (see Section VII)) can be designed to operate optimally by properly controlling the rate-controlling variables: (1) microorganism concentration, (2) bacterial acclimation, (3) temperature level, (4) contact duration and mode, and (5) organic feed concentration. The theoretical approach used in the design of biological treatment systems is to develop mathematical models which depict relationships between parameters that control efficiency of microbial growth and substrate removal. The purpose of these design models is to provide predictive equations consistent with the underlying metabolic principles governing the waste treatment process. In commonly used models (see Appendix E), effluent quality is related to residence time and is independent of influent concentration. More sophisticated multi-media models have been developed (see Hwang 1980a, Freeman, 1979 and Freeman et al., 1980) to reflect the recognition that biological treatment not only involves oxidation of organic compounds, but removal through air stripping and waste sludge as well.

A primary limitation of biological treatment of OCPSF process wastewaters is the great variability of toxic pollutant loadings. While microbial populations within a biological treatment system gradually acclimate to specific compounds in the waste streams from a given organic chemicals plant, the composition of a waste stream may rapidly vary as different production processes are operated. The microbial population treating a complex waste stream of widely varying composition will not be as well acclimated as a microbial population treating a relatively constant waste stream. Thus, in order to maintain desired removal rates, physical-chemical pretreatment may be required prior to the biological treatment train.

The kinetics of pollutant removal by biological systems are, in general, more sensitive to pollutant concentration than pollutant loading. When biochemical inhibition can be attributed solely to the concentration of pollutants in raw wastewater, rather than to inherent non-biodegradability, dilution of such wastewaters is an appropriate and effective pretreatment step to improve the overall performance of a biological system. Typical diluent streams include utility plant blowdown, once through cooling water, or fresh water from wells or surface supplies.

Physical-Chemical Treatment

Physical-chemical technologies are commonly used by industrial manufacturers as in-process recovery and treatment steps, as a means of rendering wastewaters more amenable to treatment by biological processes, and in certain cases, as the sole end-of-pipe treatment of wastewaters where such streams are ineffectively treated by biological processes (e.g., low in BOD and COD or low in BOD and high in COD). Such operations include: equalization, sedimentation, filtration, phase separation, solvent extraction, stripping, aeration, absorption on a synthetic resin or activated carbon, azeotropic or extractive distillation, chemical precipitation, chemical coagulation, and polishing ponds. These techniques may be combined or repeated in sequence, as required, to achieve the desired level of treatment of the waste effluent. The following discussion briefly summarizes important physical-chemical treatment concepts.

Wastewaters from individual product lines are generally fed to a common tank or basin of sufficient volume to allow mixing of different wastewaters and thereby minimize influent variations. Wastewaters containing inordinately high concentrations of organic pollutants can also be diverted to auxiliary basins; off-specification wastewaters are then fed to the biological system at a suitable rate. Both equalization and auxiliary basins reduce hydraulic and pollutant concentration variation to the biological system and result in significantly higher overall efficiency.

Solids present in wastewaters can be removed by a wide variety of processes including sedimentation, dissolved air flotation, mixed media filtration, chemical coagulation with gravity sedimentation, and polishing ponds. Oily wastewaters can be treated in a similar manner.

Steam, air, or solvent stripping of certain waste streams can also reduce high loadings of organic pollutants, minimize organic loading variations, and remove potentially toxic or inhibitory contaminants. Examples of waste streams successfully treated by stripping include process wastewaters from chlorinated hydrocarbon and complex aldehyde manufacture. A more detailed discussion of the amenability of specific toxic pollutants to removal by steam stripping may be found in Section VII and Appendix E.

Adsorption is among the most common of pretreatment processes used to remove organic pollutants from aqueous waste streams. Activated carbon is the most common adsorption medium, although advances in macroreticular polymerization techniques (allowing for the manufacture of microporous molecular sieves with a predetermined (average) pore size, pore size distribution, and surface area) enable the selection of a synthetic resin with specific adsorption selectivity. In either system, the adsorbent becomes saturated with the adsorbate and requires regeneration. For carbon this is generally accomplished in multihearth or rotary tube furnaces. Synthetic resins may be regenerated by a basic or acidic solution, or an organic solvent such as methanol, water, or steam, depending on the adsorption characteristics of the solute; in many cases, recovery of the solute is also practiced (Simpson, 1972; Kim et al. 1976; Breck, 1977; and Lyman, 1976). For additional detail on adsorption processes and their use in treating priority pollutant-containing wastewaters, see Section VII and Appendix E.

Treatment System Performance

Selection of the appropriate treatment train for a waste stream is almost solely dependent on the desired performance characteristics. Biological systems are based on the required residence time to achieve the desired effluent quality. Where extended residence times are infeasible (e.g. space limitations on reactor size), pretreatment upstream of the biological unit may be employed to remove toxic pollutants which slow, prevent, or interfere with the biological process.

In selecting a physical-chemical treatment unit, the thermodynamics of the operation dictate effluent quality. Steam stripping, for example, is a mass transfer operation that is used to remove volatile organic contaminants from dilute solutions. The practicality of using steam stripping to treat a particular waste stream is dependent on the solubility, vapor pressure, and

the activity coefficients of pollutants to be treated. These thermodynamic properties dictate tray and steam requirements, and ultimately, column efficiencies. Excessive tray requirements to obtain the desired outlet (effluent) concentration organic pollutants would rule out steam stripping as a desirable treatment operation.

In summary, though the design of a treatment train can be unique to each plant, by selection and proper operation of appropriate treatment technologies, it is possible for individual plants to meet common effluent limitations regardless of raw wastewater quality. From this discussion of treatability and available treatment technologies, EPA found no basis for subcategorization on the basis of engineering controls.

FACILITY SIZE

Although sales volume, number of employees, area of a plant site, plant capacity, and production rate might logically be considered to define facility size, none of these factors alone describes facility size in a satisfactory manner as discussed in Section III of this report. Recognizing these limitations, for the purpose of this report, size is best defined as the sum of process line production rates present at individual plants production rates are those reported in the 308 Questionnaire. Although the production sizes of the waste streams within the Organic Chemicals and Plastics/Synthetic Fibers Industries vary widely, ranging from less than 10,000 lbs/day to more than 5,000,000 lbs/day (a range of over five hundredfold), this definition fails to embody fundamental characteristics such as continuous or batch manufacturing processes. While equivalent production rates may be accomplished by either production method, characteristics of the wastewater streams may vary substantially because of different yield losses inherent in each process. Therefore, there is no adequate method to define facility size, and it cannot be used as a technical basis for subcategorization. In addition, statistical analysis of production rate as a factor for subcategorization was inappropriate for the same reason.

GEOGRAPHICAL LOCATION

Companies in the OCPSF Industries usually locate their plants based on a number of factors. These include:

- Sources of raw materials
- Proximity of markets for products
- Availability of an adequate water supply
- Cheap sources of energy
- Proximity to proper modes of transportation
- Reasonably priced labor markets.

The availability and proximity of raw materials determine both the location and nature of a facility; the petrochemical industry for example is located largely in the gulf states where supplies of natural gas and other petroleum based materials are readily available. Companies also locate their facilities based on the type of production involved. For example, specialty producers

may be located closer to their major markets, whereas producers of commodity chemicals may be centrally located to service a wide variety of markets. The availability of water may also be an influencing factor on the plant location and may moreover influence the product/processes employed by a plant. A limited water supply will, for example, encourage water conservation. Availability of energy, transportation, and labor also affect the economic viability of plant and are related to a plant's location.

Most importantly, plant location may affect the design of biological treatment systems (and thus the effectiveness of such systems) because of the influence of temperature on biodegradation rates. It is generally accepted that wastewater temperature affects the performance of the biological treatment process since the biodegradation rate is temperature dependent. The relationship between biodegradation rate and reaction temperature is generally written as:

$$K_T = K_{20°C} \times \theta^{(T-20)}$$

where: k_T = kinetic rate at temperature T (°C)

$K_{20°}$ = kinetic rate at 20(°C)

θ = temperature coefficient

T = reaction temperature

Reaction temperature is a complex function of ambient air temperature, wastewater temperature, and system design. The sensitivity of the reaction rate to temperature is defined by θ, an empirically determined dimensionless coefficient. A value of θ equal to 1.00 would imply that the reaction kinetics are unaffected by changes in temperature. As the value of θ increases above 1.0 the reaction becomes increasingly sensitive to changes in operating temperature. The value of θ for several organic-chemical wastewaters has been reported to vary from 1.055 to 1.10. Although not reported for individual priority pollutants, the effect of temperature on BOD removal in an organic chemicals plant shows that although treatment efficiency decreases with decreasing temperature, a high degree of BOD removal can be achieved even at very low temperatures if suitable food to microorganism ratios are maintained. Other references show conflicting results in evaluating the effect of temperature on wastewater treatment plant performance. Berthouex, et al. (1976) developed linear and time series models relating effluent BOD 5 to influent BOD 5, mixed liquor suspended solids (MLSS), temperature and hydraulic retention time based on three years of data compiled at the Madison Sewage Treatment Plant (Wisconsin). They found no significant effect of temperature on performance when gradual changes in temperature (4-24°C) occurred.

B.A. Sayigh (1977) conducted activated-sludge laboratory studies with continuous stirred-tank reactors and concluded that the effects of temperature using domestic sewage, organic-chemicals wastewaters and petro-chemical wastewaters depend on the specific type of wastewater being treated. The author also found that the higher the sludge age, the less the susceptibility of the process to variations in temperature. Work done by Del Pino (1982) using wastewaters from three organic chemical plants showed that low

temperature operation did reduce treatment efficiency, but this could generally be compensated for by operation at higher MLSS concentrations.

The principal difficulty encountered when evaluating the impact of ambient temperature on treatment system performance is that temperature is only one of several characteristics which affect the operation of the system. Changes in ambient temperature (both seasonal and short term), raw waste load, product mix, flow, food to microorganism ratio, dissolved solids and suspended solids will all have some impact on treatment. In reviewing full scale plant operating data, it is difficult to isolate ambient temperature effects from changes caused by variables other than temperature. This problem can be overcome in laboratory scale studies where ambient and wastewater temperature can be controlled and other variables held constant, but the usefulness of applying temperature data collected in this manner to the operation of a full scale system is questionable. This is particularly true in the OCPSF Industry where raw waste load variability is significant due to batch operations, frequent product mix changes, and raw materials variations.

While ambient temperature can have an impact on the treatment efficiency in some cases, temperature is only one of several factors which impact treatment. Waste load variations, biomass acclimation, flow variations, waste treatability and temperature of the wastewater during treatment must all be taken into consideration when developing a treatment sequence for a specific industrial site. With proper treatment system design (e.g., extended aeration), seasonal temperature variations can be accommodated. Thus, temperature considerations must be viewed as specific to a given site design, rather than as specific to any given region or geographic area and is therefore inappropriate as a basis for subcategorization.

AGE OF EQUIPMENT AND FACILITY

Facility age can affect raw waste pollutant concentrations in several ways. Older plants may use open sewers and drainage ditches to collect process wastewater. These ditches may run inside the process buildings as well as between manufacturing centers. Because of their convenience and lack of other collection alternatives, cooling waters, steam condensates, wash waters, and tank drainage waters as well as contact wastewaters are generally collected in these drains. Older facilities, therefore, are likely to exhibit higher wastewater discharge flow rates than newer facilities which typically segregate process contact wastewaters from non-contact process wastewaters. In addition, the inclusion of relatively clean waters (e.g., noncontact cooling waters, steam condensates) dilutes raw wastewaters. Older plants are also less amenable to recycle techniques and wastewater segregation efforts; both methods require the installation of new collection lines as well as the isolation of the existing collection ditches and are difficult to accomplished with existing piping systems.

Facility age, for the purposes of this report and as reported in the 308 Questionnaire, is defined as the oldest process in operation at the site. Because most plants within the Organic Chemicals and Plastics/Synthetic Fibers Industries consist of more than one process however, this definition fails to reflect the true age of an OCPSF plant. Moreover production facilities are

continually modified to meet current production goals and to accommodate new product lines. Actual process equipment is generally modern (i.e., 0-15 years old) while major building structures and plant sewers are not generally upgraded unless the plant expands significantly by new construction. Because the age of plants within the Organic Chemicals and Plastics/Synthetic Fibers Industries cannot be accurately defined, plant age is inappropriate for subcategorization.

Process equipment common the the OCPSF Industries can be divided into the following general categories: vessels in which the chemical reaction takes place; equipment used to separate products from unwanted materials; equipment used to control emissions from the process train; and vessels used to store raw materials and products. Process wastewaters may be generated in this equipment as a reaction product, reaction solvent, working fluid, heat transfer medium, and maintenance/cleaning operations. Emission control equipment such as scrubbers may also generate wastewaters.

The extent to which process wastewaters are contaminated with priority pollutants depends mainly upon the degree of contact that process water has with reactants/products, the effectiveness of the separation train, and the physico-chemical properties of those priority pollutants formed in the reaction. Raw wastewater quality is determined by the specific process design and chemistry. For example, water formed during a reaction, used to quench a reaction mixture, or used to wash reaction products will contain greater amounts of pollutants than does water that does not come into direct contact with reactants or products. The effectiveness of a separation train is determined by the process design and the physico-chemical properties of those pollutants present (see Engineering Aspects of Pollution Control). While improvements are continually made in the design and construction of process equipment, the basic design of such equipment may be quite old. Process equipment does however deteriorate during use and requires maintenance to ensure optimal performance. When process losses can no longer be effectively controlled by maintenance, process equipment is replaced. The maintenance schedule and useful life associated with each piece of equipment are in part determined by equipment age and process conditions. Equipment age however does not directly affect either pollutant concentrations in influent or effluent wastewaters and is therefore inappropriate as a basis for subcategorization.

COST OF ACHIEVING EFFLUENT REDUCTION

The waste treatment investment and operating costs for a specific chemical plant depend on several factors:

- The ability to recycle process wastewaters.
- The ability to recover products from process wastewaters.
- The composition and quantity flow of waste streams.

- The geographical area within which the wastes are generated and disposed of.
- The existence of POTWs to accept waste streams.
- The generation of solid waste.
- The nature of the chemical process.
- The kind and purity of the raw materials.

The technology for pollution abatement consists mainly of the same physical and chemical separations and reaction technologies used in chemical manufacture. Wastewater streams such as process water, boiler blow-down, and runoff water may be treated separately or collectively by appropriate operations in one or more treatment stages. Streams requiring different treatment methods are segregated and subsequently combined at the point where treatment becomes similar. For example, runoff waters might be settled in a thickener; certain process waters might be separated by dissolved air flotation, steam stripped, and treated biologically; other process wastewaters might be neutralized and filtered; and the sanitary sewer flow might either be treated biologically. All streams might then be combined for a water quality check, flow equalization, and discharge to an adjacent water body.

Each of these factors is considered in this section. The composition of raw wastewaters is largely a function of the products and processes by which these products are made. The treatability of these wastewaters (as discussed earlier) is largely independent of the raw waste load; that is, by selection and proper operation of appropriate treatment technologies, it is possible for individual plants to meet common effluent limitation. Accordingly, treatment costs are dependent upon effluent quality and inappropriate as a basis for subcategorization. Industry wide costs of compliance with proposed effluent limitations are analyzed in the separate companion study, Economic Analysis of Proposed Effluent Standards and Limitations for the Organic Chemicals and Plastics/Synthetic Fibers Industry, EPA 440/2-83-004, which accompanies the proposed OCPSF regulations.

NONWATER QUALITY ENVIRONMENTAL IMPACTS

Plants within the Organic Chemicals and Plastics/Synthetic Fibers Industries, in addition to producing process wastewaters requiring treatment, may generate significant amounts of airborne pollutants and solid wastes. Air emissions are controlled by a wide variety of technologies including absorption, adsorption, filtration, condensation, and incineration. Absorption technologies in controlling atmospheric emissions generate both solid and liquid waste streams. Solid wastes generated by OCPSF plants are treated by technologies including: filtration, coagulation, stripping, extraction, distillation, carbon adsorption, chemical reaction, chemical fixation, and incineration. Many of these technologies used to treat solid wastes also generate wastewater streams.

Generation of both airborne waste streams and solid waste streams is subject to the same considerations that are process wastewaters: chemical manufacturing processes do not convert raw materials to products at 100 percent efficiency; that is, a portion of the raw materials used in a manufacturing process are inevitably converted into unwanted products. These products may potentially be discharged to the atmosphere, the aquatic environment, and the terrestrial environment depending upon the specific manufacturing configuration (e.g., use of an aqueous reaction medium, use of gaseous reactants). Both the impacts of air and solid waste emissions parallel those of wastewater and do not provide an alternate subcategorization system.

Similarly the energy consumption of wastewater treatment technologies fails to provide meaningful subcategorization. The high energy content of raw materials and products of the OCPSF Industries results in only a small fraction of the total energy used for pollution control. Specific energy requirements are determined by the nature of the processes and by such unit operations as thermal cracking, distillation, heating or reactors, and similar processing steps. In contrast, practically all wastewater treatment technologies require a modest energy input that is a small fraction of the total plant energy requirements. The energy requirements of the wastewater treatment facility is small in comparison to the plant total.

PROCESSES EMPLOYED AND PROCESS CHANGES

The product/processes alone employed at individual plants -- that is the raw materials used, the products manufactured, and the chemistry of production -- provide a logical basis for subcategorization of the Organic Chemicals and Plastics/Synthetic Fibers Industry. Statistical analyses of priority pollutant data within these industries as discussed in Appendix C moreover indicate that individual plants can be grouped by ranges of priority pollutants present in untreated wastewater, i.e., the wastewaters of some plants have a higher loadings of certain toxic pollutant than others. The various chemical processes yield wastewaters containing individual chemical species which differ in molecular structure and consequently in susceptability to various types of treatment. These considerations are discussed more fully below.

An important characteristic of the Organic Chemicals and Plastics/Synthetic Fibers Industries is the degree of vertical and horizontal integration between manufacturing units at individual plants. Since the bulk of the basic raw materials is derived from petroleum or natural gas, many of the commodity organic chemical manufacturing plants are either part of or contiguous to petroleum refineries; most of these plants have the flexibility to produce a wide variety of products. Relatively few organic manufacturing facilities are single product/process plants unless the final product is near the fabrication or consumer product stage. Additionally, many process units are integrated in such a fashion that amounts of related products can be varied as desired over wide ranges. There can be a wide variation in the size (production capacity) of the manufacturing complex as well as diversity of products and processes. In addition to the variations based on the design capacity and design product mix, economic and market conditions of both the products and raw materials can

greatly influence the production rate and processes employed even on a relatively short-term basis.

Raw Materials and Products

Synthetic organic chemicals are derivatives of naturally-occurring materials (petroleum, natural gas, and coal) which have undergone at least one chemical reaction. Given the large number of potential starting materials and chemical reactions available to the industry, many thousands of organic chemicals are produced by a potentially large number of basic processes having many variations. Similar considerations also apply to the Plastics/Synthetic Fibers Industry although both the number of starting materials and processes are more limited. Both organic chemicals and plastics are commercially produced from six major raw material classifications: methane, ethene, propene, butanes/butenes, and higher aliphatic and aromatic compounds. This list can be expanded to eight by further defining the aromatic compounds to include benzene, toluene, and xylene. These raw materials are derived from natural gas and petroleum, although a small portion of the aromatic compounds are derived from coal.

Using these eight basic raw materials (feedstocks) derived from the petroleum refining industry, process technologies used by the Organic Chemicals and Plastics/Synthetic Fibers Industries lead to the formation of a wide variety of products and intermediates, many of which are produced from more than one basic raw material either as a primary reaction product or as a co-product. Furthermore, the reaction product of one process is frequently used as the raw material for a subsequent process. The primary products of the Organic Chemicals Industry, for example, are the raw materials of the Plastics/Synthetics Industry. As the chemical complexity of a raw material increases, the variety and number of potential products and chemical intermediates also tend to increase (see FIGURES IV-2 THROUGH IV-6). This lack of distinction is more pronounced as products become further removed from basic feedstocks. Many products/intermediates can be made from more than one raw material. Acetone, for example, is produced by three separate processes using propene, C 4 hydrocarbons, and cumene as raw materials. Frequently, there are alternate processes by which a product can be made from the same basic raw material.

Neither raw materials nor products provide meaningful subcategorization of the OCPSF Industries. The raw materials of these industries comprise thousands of compounds. These industries also produce as many as 25,000 products. Aggregation of industry plants according to basic feedstocks fails to provide meaningful differences in plant wastewaters because of the wide variations in process chemistry employed by plants. Similarly, the large number of products manufactured by typical industry plants makes subcategorization by products impractical.

Process Chemistry

Chemical and plastics manufacturing plants share an important characteristic: chemical processes never convert 100 percent of the feed stocks to the desired products, since the chemical reactions/processes never proceed to total completion. Moreover, because there are generally a variety of reaction

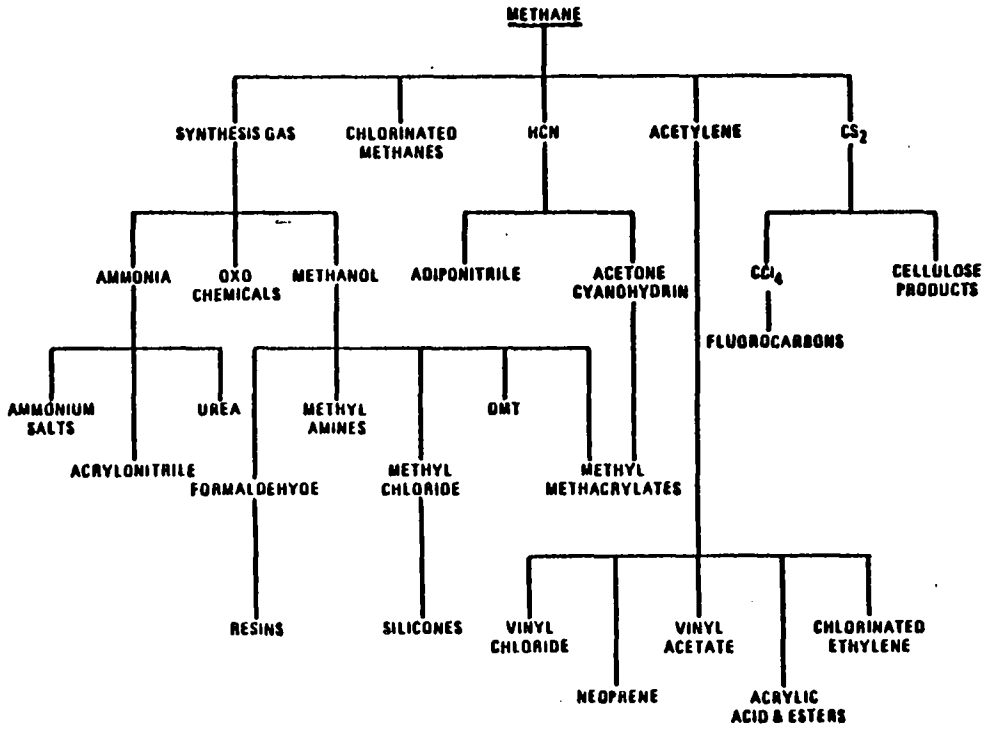

FIGURE IV-2- SOME PRODUCTS DERIVED FROM METHANE

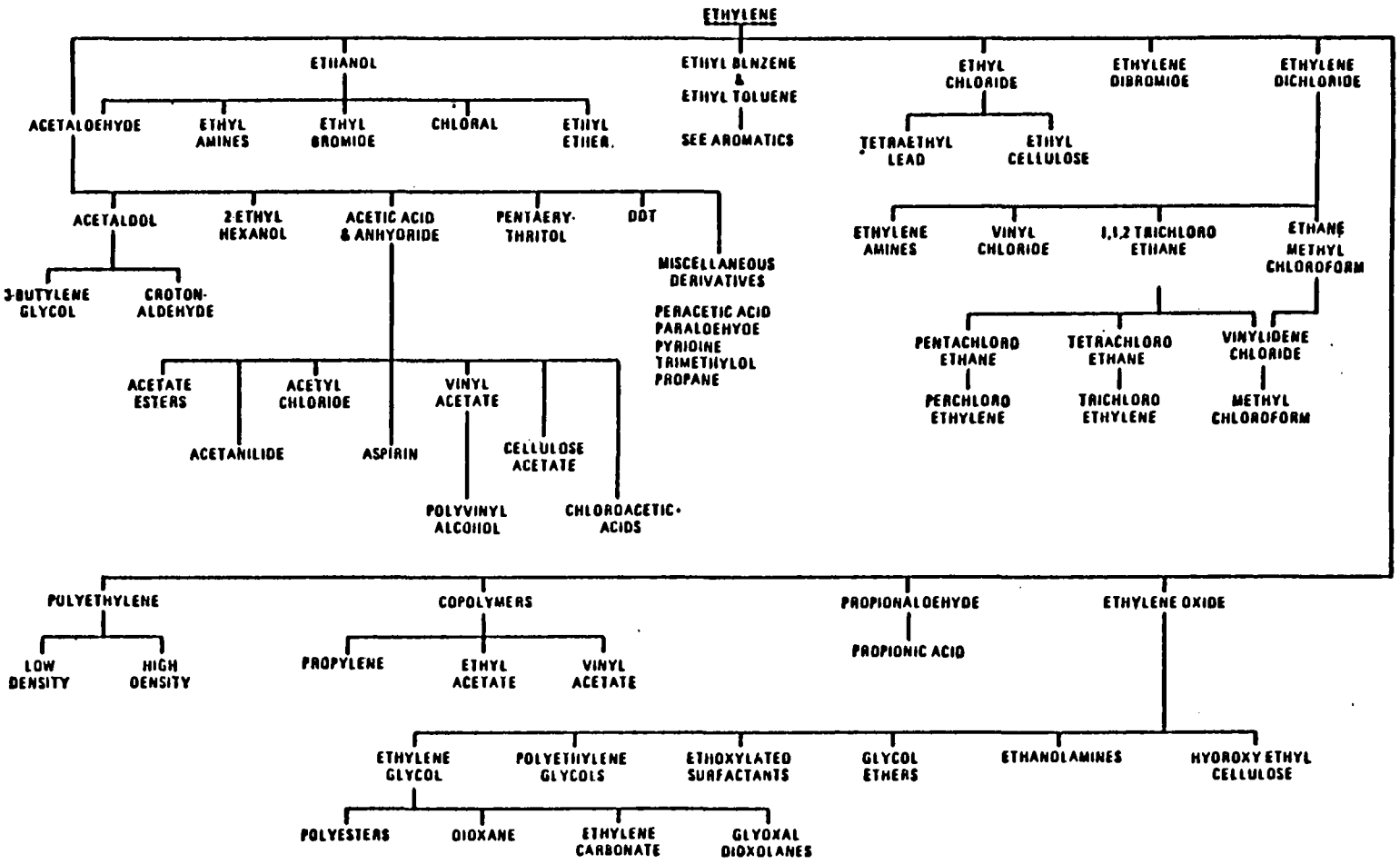

FROM: Riegel's Handbook of Industrial Chemistry, Seventh Edition, by James A. Kent; Copyright (c) 1974 by Van Nostrand Reinhold Company. Reprinted by permission of the publisher.

FIGURE IV-3-SOME PRODUCTS FROM ETHENE

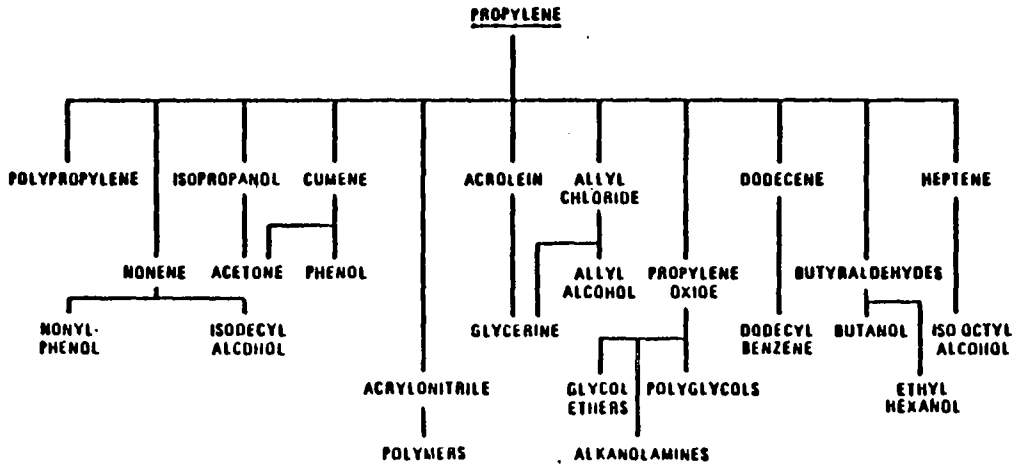

FROM: Riegel's Handbook of Industrial Chemistry, Seventh Edition, by James A. Kent; Copyright (c) 1974 by Van Nostrand Reinhold Company. Reprinted by permission of the publisher.

FIGURE IV-4-SOME PRODUCTS DERIVED FROM PROPENE

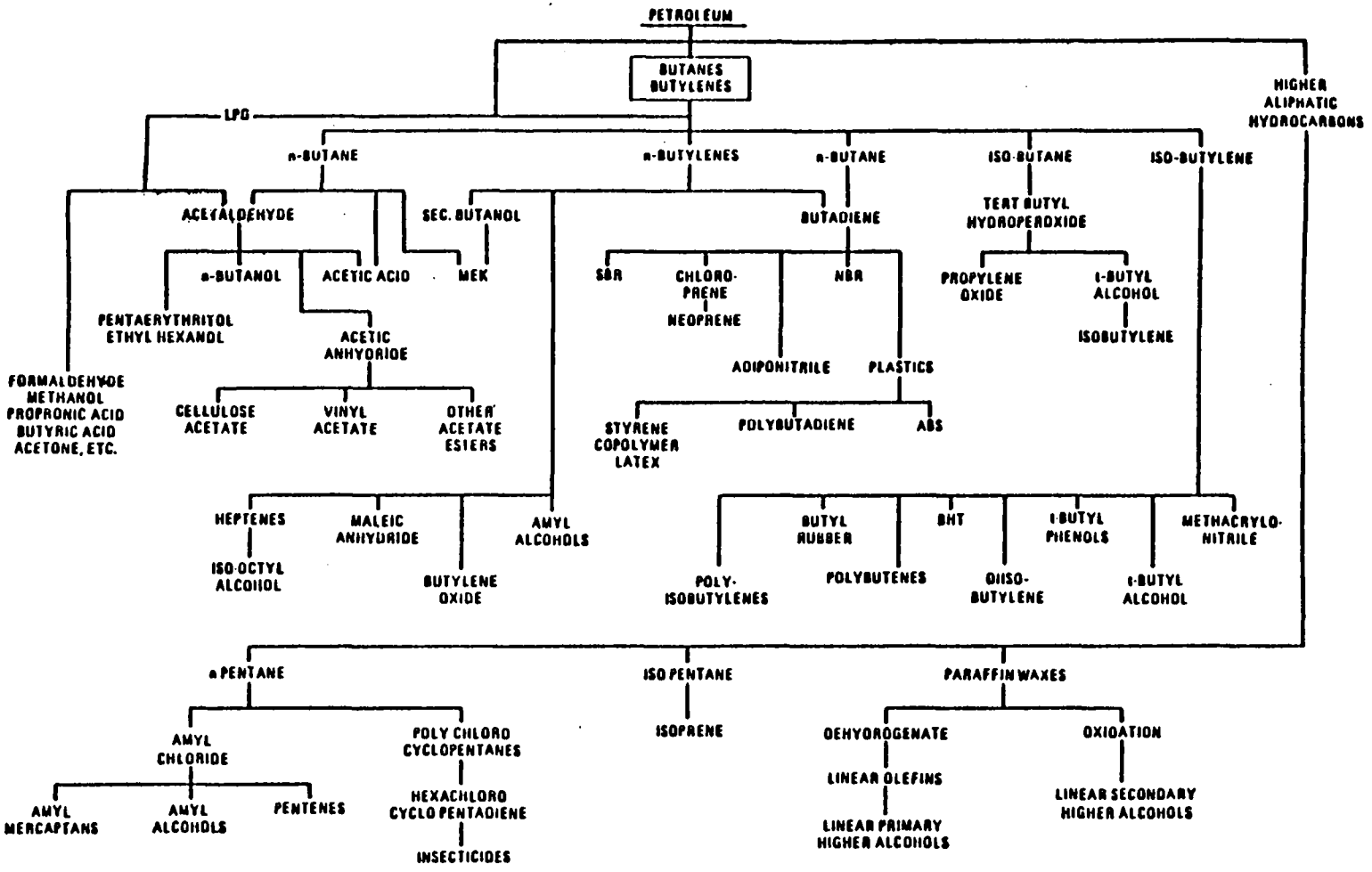

FROM: Riegel's Handbook of Industrial Chemistry, Seventh Edition, by James A. Kent; Copyright (c) 1974 by Van Nostrand Reinhold Company. Reprinted by permission of the publisher.

FIGURE IV-5-SOME PRODUCTS DERIVED FROM C_4 AND HIGHER ALIPHATIC COMPOUNDS

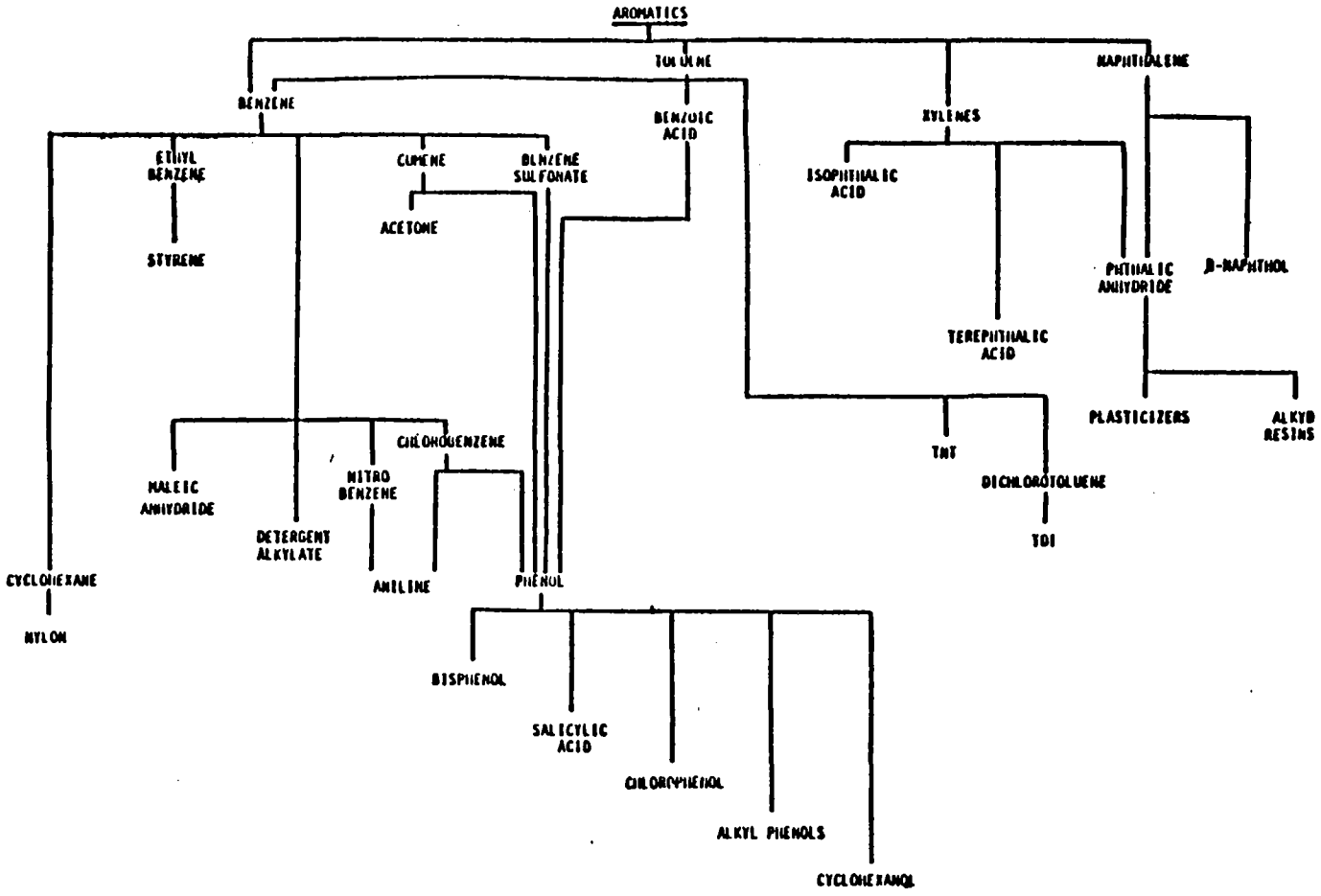

FROM: Riegel's Handbook of Industrial Chemistry, Seventh Edition, by James A. Kent; Copyright (c) 1974 by Van Nostrand Reinhold Company. Reprinted by permission of the publisher.

FIGURE IV-6-SOME PRODUCTS DERIVED FROM AROMATIC COMPOUNDS

pathways available to reactants, undesirable by-products are often generated. This produces a mixture of unreacted raw materials, products, and by-products that must be separated and recovered by operations that generate residues with little or no commercial value. These losses appear in process wastewater, in air emissions, or directly as chemical wastes. The specific chemicals that appear as losses are determined by the feedstock and the process chemistry imposed upon it. The different combinations of products and production processes distinguish the wastewater characteristics of one plant from that of another.

Manufacture of a chemical product necessarily consists of three steps: (1) combination of reactants under suitable conditions to yield the desired product; (2) separation of the product from the reaction matrix (e.g., by-products, co-products, reaction solvents); and (3) final purification of the product. Each step may lead to the introduction of pollutants to process wastewaters: pollutants arise from the first step as a result of alternate reaction pathways; separation of reactants and products from a reaction mixture is imperfect and both raw materials and products are typically found in process wastewaters.

Though there is strong economic incentive to recover both raw materials and products, there is little incentive to recover the myriad of by-products formed as the result of alternate reaction pathways. An extremely wide variety of compounds can form within a given process. Typically, chemical species do not react via a single reaction pathway; depending on the nature of the reactive intermediate, there is a variety of pathways which lead to a series of reaction products. Often, and certainly the case for reactions of industrial significance, one pathway may be greatly favored over all others, but never to total exclusion. The direction of reactions in a process sequence is controlled through careful adjustment and maintenance of conditions in the reaction vessel. The physical condition of species present (liquid, solid, or gaseous phase), conditions of temperature and pressure, the presence of solvents and catalysts, and the configuration of process equipment dictate the kinetic pathway by which a particular reaction will proceed.

Therefore, despite the differences between individual chemical production plants, all transform one chemical to another by chemical reactions and physical processes. Though each transformation represents at least one chemical reaction, production of virtually all the industry's products can be described by one or more of 41 generalized chemical reactions/processes shown in TABLE IV-3. Subjecting the basic feedstocks to sequences of these 41 generic processes produces most commercial organic chemicals and plastics.

Pollutant formation is dependent upon both the raw material and process chemistry and broad generalizations regarding raw wastewater loads based solely on process chemistry are difficult at best. Additionally OCPSF typically employ unique combinations of the processes shown in Table IV-3 to produce organic chemicals and plastics/synthetic fibers that tend to blur any distinctions possible. For the purposes of studying the priority pollutants (as opposed to BOD 5), process chemistry fails to provide meaningful subcategorization of the OCPSF Industries. The following section examines the combination of raw material and process chemistry by considering product/processes found within the OCPSF.

TABLE IV-3

MAJOR PROCESSES OF THE ORGANIC CHEMICALS AND PLASTICS/SYNTHETIC FIBERS INDUSTRIES

Acid Cleavage
Alkoxylation
Alkylation
Amination
Ammonolysis
Ammoxidation
Carbonylation
Chlorohydrination
Condensation
Cracking
Crystallization/Distillation
Cyanation/Hydrocyanation
Dehydration
Dehydrogenation
Dehydrohalogenation
Distillation
Electrohydrodimerization
Epoxidation
Esterification
Etherification
Extractive distillation
Extraction
Fiber Production
Halogenation
Hydration
Hydroacetylation
Hydrodealkylation
Hydrogenation
Hydrohalogenation
Hydrolysis
Isomerization
Neutralization
Nitration
Oxidation
Oxyhalogenation
Oxymation
Peroxidation
Phosgenation
Polymerization
Pyrolysis
Sulfonation

Product/Processes

Each chemical product may be made by one or more combinations of raw feedstock and generic process sequences. Specification of the sequence of product synthesis by identification of the product and the generic process by which it is produced is called a "product/process." There are, however, thousands of product/processes within the OCPSF Industries. Data gathered on the nature and quantity of pollutants associated with the manufacture of specific products within the Organic Chemicals and Plastics/Synthetic Fibers Industries have been indexed for 176 product/process.

Organic chemical plants vary greatly as to the number of products manufactured and processes employed and may be either vertically or horizontally integrated. One representative complex which is both vertically and horizontally integrated may produce a total of 45 high volume products with an additional 300 lower volume products. In contrast, a specialties chemicals plant may produce a total of 1000 different products with 70 to 100 of these being produced on any given day. Organic chemical plants typically utilize many feedstocks and may employ many of the processes shown in Table IV-3 at individual plants.

Specialty chemicals on the other hand may involve several chemical reactions and require a fuller description. For example, preparation of toluene diisocyanate from commodity chemicals involves four synthetic steps and three generic processes as shown below.

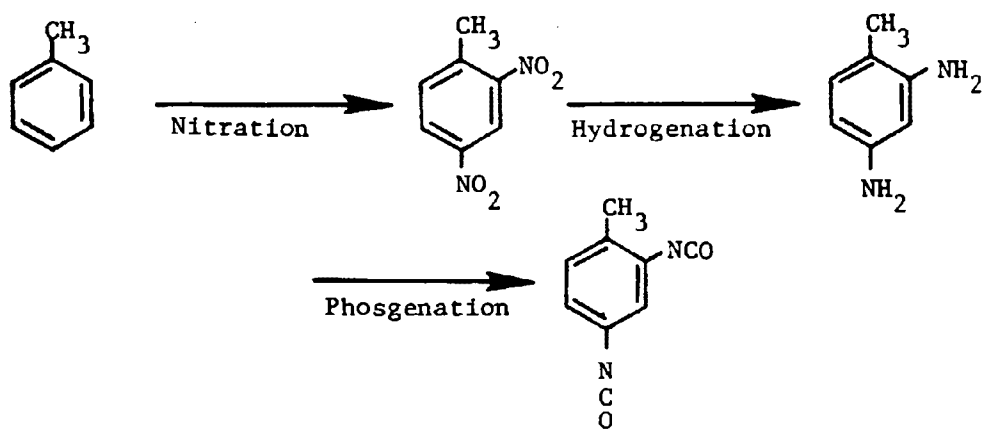

This example in fact is relatively simple and manufacture of other specialty chemicals is more complex. Thus as individual chemicals become further

removed from the basic feedstocks of the industry, more processes are required to produce them.

In contrast to organic chemicals, plastics and synthetic fibers are polymeric products, their manufacture directly utilizes only a small subset of either the chemicals manufactured or processes used within the Organic Chemical Industry. Such products are manufactured by polymerization processes in which organic chemicals (monomers) react to form macromolecules or polymers, composed of thousands of monomers units. Reaction conditions are designed to drive the polymerization as far to completion as practical and to recover unreacted monomer. Unless a solvent is used in the polymerization, by-products of polymeric product manufactures are usually restricted to the monomer(s) or to oligomers (a polymer consisting of only a few monomer units). Because the mild reaction conditions generate few by-products, there is economic incentive to recover the monomer(s) and oligomers for recycle; the principal yield loss is typically scrap polymer. Thus, smaller amounts of fewer organic chemical co-products (pollutants) are generated by the production of polymeric plastics and synthetic fibers than are generated by the manufacture of the monomers and other organic chemicals.

There are several ways by which the Organic Chemicals and Plastics/Synthetic Fibers Industries might be potentially subcategorized on the basis of process chemistry. For example, subcategorization could be based upon the particular combination of product/processes in use at individual plants. Individual plants within these industries however are unique in terms of the numbers and types of product/processes employed and raw wastewater quality. As plants are made subject to effluent limitations or standards, pretreatment and treatment trains are uniquely designed and operated to meet pollutant removal criteria; and although raw wastewater quality may differ greatly among plants, similar removal efficiencies may be obtained (see Engineering Aspects of Pollution Control). Thus, a scheme that would subcategorize plants based on raw wastewater quality alone would unnecessarily separate plants that are appropriately covered by a single set of uniform requirements. Product/process is inappropriate as a basis for subcategorization.

SUMMARY

Plants within the Organic Chemicals and Plastics/Synthetic Fibers Industries share the following characteristics:

- Products are usually made in multiproduct plants.
- One or more unit processes may be applied during the product manufacture.
- Production rates of the individual products can vary widely during short periods of time.
- There can be fairly rapid changes in technology within a manufacturing complex in the industry.

- Relatively minor changes in process conditions can lead to significant changes in wastewater.

- Effluent quality is independent of the size of a facility or its geographical location.

- Treatment trains which achieve equivalent removal efficiencies are designed on a plant-by-plant basis.

As a result of this analysis, the Organic Chemicals and Plastics/Synthetic Fibers Industries may be divided into two subcategories: plants which produce plastic and synthetic fiber products only (Plastics-Only plants); and plants which produce both organic chemicals and plastics/synthetic fiber products (Not Plastics-Only). Two subcategories are proposed under the BAT effluent limitations. Although four subcategories are proposed for the BPT limitations (see Volume I), the two subcategorization schemes are inherently compatible. Both BAT and BPT have a Plastics-Only subcategory. While BPT has an oxidation subcategory, Type 1 subcategory, and Other Discharge subcategory, these three subcategories are incorporated in the Not Plastics-Only subcategory of BAT.

REFERENCES

BERTHOUEX, P.M., HUNTER, W.G., PALLESEN, L. and SHIH, C.Y. 1976. The use of stochastic models in the interpretation of historical data from sewage treatment plants. Water Research 10: 689-698.

del PINO, M.P. and ZIRK, W.E. 1982. Temperature effects on biological treatment of petrochemical wastewaters. Environmental Progress 1(2): 104.

MORRISON, D.F. 1976. Multivariate Statistical Methods. McGraw-Hill Book Company, New York.

SAYIGH, B.A. 1977. Temperature Effects on the Activated Sludge Process. Ph.D. thesis presented in May 1977, University of Texas at Austin.

SECTION V

WASTEWATER GENERATION AND CHARACTERIZATION

WATER USAGE

General

The Organic Chemicals and Plastics/Synthetic Fibers Industries use large volumes of water in the manufacture of products. According to 1978 Census Bureau statistics on industrial water use, manufacturers of industrial organic chemicals used about 17 percent of the total water consumed by manufacturing establishments in 1978 (Bureau of the Census 1981). Census Bureau water use statistics for the OCPSF Industries for 1978 are presented in TABLE V-1.

The major sources of intake water for the OCPSF Industries are provided in TABLE V-2. The majority of water used by the industries (about 55 percent) is supplied by surface water. Only about 12 to 16 percent of intake water comes from public water systems. Ground water and tide water are additional sources of water for OCPSF plants.

Water Use by Purpose

Organic Chemicals and Plastics/Synthetic Fibers Industry plants use water for many different purposes: noncontact cooling; direct process contact uses; indirect process contact uses (e.g., in pumps, seals, and vacuum jet and steam ejector systems); noncontact ancillary uses (e.g., boilers and utilities); maintenance, equipment cleaning, and work area washdown; air pollution control (e.g., Venturi scrubbers); for drinking water; and to transport wastes.

Water usage data by categories of use for OCPSF plants included in a 1978 Census Bureau survey are presented in TABLE V-3. Similar water usage data for OCPSF plants responding to EPA's 308 Questionnaire are presented in TABLE V-4. The 308 data reflect information on water use provided by 406 of the original 566 plants in the 308 database. Forty-four of the 566 plants were deleted from the 308 database because a review of updated plant information revealed plants that had since been shut down, that were no longer producing products within the scope of this regulation, or whose wastewater flows came predominantly from inorganic product/processes (see Section III of the BPT document, Volume I of this publication). Twenty-five plants provided no water usage data, and the data reported by an additional 91 plants were incomplete.

Most water used in the Organic Chemicals and Plastics/Synthetic Fibers Industries is cooling water. Cooling water is either contaminated, such as contact cooling water from barometric condensors, or uncontaminated, such as noncontact cooling waters. According to Census Bureau data, over 80 percent of intake water used in the industry is for cooling and condensing purposes (see Table V-3). This is consistent with water usage data from the 308 Survey

TABLE V-1

SUMMARY WATER USE STATISTICS FOR THE OCPSF INDUSTRIES
1978 CENSUS DATA (a)

INDUSTRY GROUP (by SIC Code)	NUMBER OF ESTABLISHMENTS	TOTAL GROSS WATER USED (b)		WATER INTAKE (c)		WATER RECIRCULATED AND REUSED (d)
		Billion Gallons	% of All Manufac-turing	Billion Gallons	% of All Manufac-turing	(Billion Gallons)
Organic Chemicals						
2865	76	(e)	--	(e)	--	279
2869	197	5,184	12	1,910	15	3,583
Total	273	--	--	--	--	3,862
Plastics/Synthetic Fibers						
2821	132	795	2	151	1	653
2823	7	187	1	109	1	89
2824	41	636	1	189	1	458
Total	180	1,618	4	449	3	1,200
TOTAL	453	--	--	--	--	5,062

SOURCE: Bureau of the Census 1981

(a) Represents data collected in a special 1978 Survey of Water Use for establishments using 20 million gallons or more of water/year in 1977; smaller volume users were excluded in this survey.

(b) Total Gross Water Used was calculated in the Census survey as the sum of "Water Intake" and "Water Recirculated and Reused"; i.e., the quantity of water that would have been required if no water had been recirculated or reused.

(c) Water Intake includes water used in processes, cooling and condensing, sanitary service, boiler feed, and other uses.

(d) Water Recirculated and Reused was defined as the volume of water recirculated multiplied by the number of times recirculated; e.g., if 100 million gallons of intake water were recirculated twice, the manufacturer reported recirculation/reuse of 200 million gallons.

(e) Data withheld to avoid disclosing operations of individual companies.

TABLE V-2

WATER INTAKE BY SOURCE FOR THE OCPSF INDUSTRIES
1978 CENSUS DATA (a)

INDUSTRY GROUP (by SIC Code)	NUMBER OF ESTABLISHMENTS	WATER INTAKE BY SOURCE (Billion Gallons)				
			Public	Company System		
		Total	Water System	Surface	Ground	Tidewater
Organic Chemicals						
2865	76	(b)	124	32	9	(b)
2869	197	1,910	165	1,555	57	(b)
Total	273		289	1,187	66	--
Plastics/Synthetic Fibers						
2821	132	151	22	44	33	(b)
2823	7	109	(b)	(b)	(b)	--
2824	41	189	6	151	13	(b)
Total	180	449	--	--	--	--
TOTAL	453	--	--	--	--	--

SOURCE: Bureau of the Census 1981

(a) Represents data collected in a special 1978 Survey of Water Use for establishments using 20 million gallons or more of water/year in 1977; smaller volume users were excluded in this survey.

(b) Data withheld to avoid disclosing operations of individual companies.

TABLE V-3

WATER INTAKE BY PURPOSE FOR THE OCPSF INDUSTRIES
1978 CENSUS DATA (a)
(Billion Gallons)

INDUSTRY GROUP (by SIC Code)	TOTAL	PROCESS	COOLING AND CONDENSING			SANITARY SERVICE	BOILER FEED	OTHER
			Steam Electric Power Generation	Air Conditioning	Other			
Organic Chemicals								
2865	1910	136	318	7.7	88	1.7	6.6	2.5
2869	241	148	(b)	(b)	1373	6.8	39.6	19.5
Total	2151	284	-	-	1461	8.5	46.2	22.0
Plastics/Synthetic Fibers								
2821	151	15	(b)	(b)	171	1.6	7.3	(b)
2823	109	33	(b)	(b)	58	0.3	3.5	(b)
2824	189	20	27.1	34.3	90	1.4	5.3	11.0
Total	449	68	-	-	319	3.3	16.1	-
TOTAL	2600	352	-	-	1780	11.8	62.3	-

SOURCE: Bureau of the Census 1981

(a) Represents data collected in a special 1978 Survey of Water Use for establishments using 20 million gallons or more of water/year in 1977; smaller volume users were excluded in this survey.

(b) Data withheld to avoid disclosing operations of individual companies.

TABLE V-4

WATER USAGE DATA FOR ORGANIC CHEMICALS AND PLASTICS/SYNTHETIC FIBERS INDUSTRY PLANTS IN THE 308 SURVEY (a)

WATER USAGE	FLOW (MGD)	% OF TOTAL WATER USAGE
Total	5677	100.0
Noncontact Cooling	4765	83.9
Direct Process Contact	523	9.2
Other (b)	389	6.9

(a) Derived from water usage data for 406 direct, indirect, and other discharge plants of the 566 plants in the 308 database. Forty-four of the 566 plants were deleted from the 308 database because the plants had been shut down or were considered outside the scope of this regulation. An additional 116 plants reported data which was inadequate to estimate total, noncontact cooling, and direct process contact water usage (see text).

(b) Other uses of water include indirect process contact uses (e.g., in pumps, seals, vacuum jets, and steam ejector systems); noncontact ancillary uses (e.g., boilers and utilities); maintenance, equipment cleaning, and work area washdown; air pollution control (e.g., Venturi scrubbers); for drinking purposes; and to transport sanitary wastes.

which indicate that noncontact cooling water comprises about 84 percent of the total water used in the OCPSF Industries (see Table V-4).

At many plants, large volumes of cooling water are used once and discharged with process wastewaters. Many of the effluent concentrations and loadings reported by plants in the 308 Survey were calculated from flow rates which included cooling water. To calculate the effluent characteristics and actual performance of treatment systems for these plants, the reported flows needed adjustments. The uncontaminated cooling water flows were subtracted from the reported total flow rates to yield the adjusted wastewater flow rates. These adjustments assumed that the uncontaminated cooling water contained no pollutants. However, some cooling waters may contain a relatively high BOD and TSS loading as well as chromium and other algaecides commonly added to noncontact cooling waters to suppress biological growth.

Direct process contact water includes water used for a variety of purposes, such as solvent, reactant, reaction medium, and coolant. Water used as a reaction medium for certain chemical processes may become a major high-strength wastewater as a result of incomplete recovery from the water medium of the final product or unwanted by-products formed during secondary reactions in solution.

While the major source of pollutant loading, the quantity of process water used by the OCPSF Industries is relatively small. For the 406 plants covered in Table V-4, direct process contact water comprises only 9.2 percent of the total water used. Similarly, Census statistics reveal that about 14 percent of intake water is used in process operations.

Water Use by Subcategory

TABLE V-5 summarizes total water usage data for 497 plants in the 308 database classified by Plastics-Only and Not Plastics-Only plants, and by direct, indirect, or other discharge-type. (See the preceding section for an explanation of the database used to estimate industry water usage for plants in the 308 Survey.) "Other" discharge methods (also referred to as zero discharge) include no discharge, land application, deep well injection, incineration, contractor removal, evaporation, and discharge to septic and leachate fields.

Some of the plants in the 308 database discharge waste streams by more than one method. However, for purposes of tabulating water usage data, each plant was assigned to a single discharge category (i.e., no double counting appears in the direct, indirect, and other discharge data columns in Tables V-5 to V-7). A plant was classified as an other or zero discharger only if all of its waste streams were zero discharge streams. Plants were classified as direct dischargers if at least one process contact waste stream was direct. Plants whose process contact waste streams were discharged to POTWs were classified as indirect dischargers. Many of the indirect discharge plants discharge noncontact cooling water directly to surface waters.

Table V-5 shows that over 60% of these 497 plants use between 0.1 and 10 million gallons of water per day (MGD). Not Plastics-Only plants typically use a greater average amount of water than do Plastics-Only plants; sixty-one

TABLE V-5

SUMMARY OF TOTAL WATER USAGE FOR
PLASTICS-ONLY AND NOT PLASTICS-ONLY PLANTS IN THE 308 SURVEY (1)

Total Water Usage (MGD)	Total Number of Plants	PLASTICS-ONLY PLANTS				NOT PLASTICS-ONLY PLANTS			
		Direct Dischargers	Indirect Dischargers	Other (2) Dischargers	All Plastics Plants	Direct Dischargers	Indirect Dischargers	Other (2) Dischargers	All Not Plastics Plants
<0.01	28	4	15	7	26	0	2	0	2
0.01-0.1	96	4	52	8	64	12	12	8	32
0.1-1.0	157	28	54	11	93	29	25	10	64
1.0-10.0	144	25	18	2	45	58	34	7	99
10.0-100.0	55	13	4	2	19	26	7	3	36
>100.0	17	1	0	0	1	11	3	2	16
TOTAL	497	75	143	30	248	136	83	30	249

(1) Water usage data was derived from the 308 database. See text for further description of the database used to estimate industry water usage.

(2) Other discharge methods include zero discharge, land application, deep well injection, incineration, contractor removal, evaporation, and discharge to septic and leachate fields.

percent of the Not Plastics-Only plants (151 plants) use more than 1.0 MGD while only 26 percent of the Plastics-Only plants (65 plants) use more than 1.0 MGD. Only one of 248 Plastics-Only plants reported using greater than 100 MGD, while 6.4 percent of the Not Plastics-Only plants (16 plants) reported using greater than 100 MGD. In both the Plastics-Only and Not Plastics-Only subcategories, direct dischargers typically reported greater water use. Sixty-one percent of the direct dischargers, as compared to only 34 percent of the indirect dischargers, use more than 1.0 MGD.

As noted previously, noncontact cooling water represents the single largest use of water in the OCPSF Industries. Noncontact cooling water usage data provided by plants in the 308 Survey are presented by subcategory in TABLE V-6. Not Plastics-Only plants generally use greater volumes of noncontact cooling water than do Plastics-Only plants. About half (49 percent) of the Not Plastics-Only plants use greater than 1.0 MGD noncontact cooling water, in comparison to 20 percent of Plastics-Only plants that use greater than 1.0 MGD. Direct dischargers in both the Plastics-Only and Not Plastics-Only categories tend to use more noncontact cooling water than do indirect dischargers, with almost half (48 percent) of the direct dischargers using greater than 1.0 MGD and only 25 percent of the indirect dischargers using more than this volume.

TABLE V-7 summarizes data from the 308 Survey on use of direct process contact water. Typically, the Not Plastics-Only plants use more direct process contact water than do Plastics-Only plants. Of the plants that supplied data, 57 percent of the Not Plastics-Only plants (125 plants) use greater than 0.1 MGD direct process contact water, while only 39 percent of the Plastics-Only plants (81 plants) use greater than 0.1 MGD. Direct discharge plants typically use more direct process contact water than do indirect dischargers. Sixty-eight percent of the direct dischargers use more than 0.1 MGD of process contact water, as compared with 36 percent of indirect discharge plants which use greater than this volume.

Water Reuse and Recycle

Current Levels of Reuse and Recycling. Data on the amount of water recirculated and reused by plants in the OCPSF Industries as reported in a 1978 Census Bureau survey are presented in Table V-1 and TABLE V-8. The Census Bureau defines "recirculated or reused water" as the volume of water recirculated multiplied by the number of times the water was recirculated. Seventy-nine percent of the OCPSF plants surveyed reported some recirculation or reuse of water (see Table V-8). At least 60% of the total gross water used by OCPSF plants consists of recirculated and reused water (see Table V-1).

Census Bureau statistics show that the bulk of recirculated water is used for cooling and condensing operations (see Table V-8), such as closed-loop cooling systems for heat transport. Chemical algaecides and fungicides are routinely added to these cooling waters to prevent organism growth and suppress corrosion, both of which can cause exchanger fouling and a reduction of heat transfer coefficients. As water evaporates and leaks from such closed systems, the concentration of minerals in these waters increases, which may lead to scale formation, reducing heat transfer efficiency. To reduce such

TABLE V-6

SUMMARY OF NONCONTACT COOLING WATER USAGE FOR
PLASTICS-ONLY AND NOT PLASTICS-ONLY PLANTS IN THE 308 SURVEY (1)

Noncontact Cooling Water Usage (MGD)	Total Number of Plants	PLASTICS-ONLY PLANTS				NOT PLASTICS-ONLY PLANTS			
		Direct Dischargers	Indirect Dischargers	Other (2) Dischargers	All Plastics Plants	Direct Dischargers	Indirect Dischargers	Other (2) Dischargers	All Not Plastics Plants
<0.001	9	0	2	4	6	0	3	0	3
0.001-0.01	42	1	27	5	33	3	5	1	9
0.01-0.1	107	11	46	7	64	18	17	8	43
0.1-1.0	136	33	32	7	72	31	23	10	64
1.0-10.0	101	16	11	2	29	45	21	6	72
10.0-100.0	39	9	3	2	14	15	7	3	25
>100.0	17	1	0	0	1	13	2	1	16
No data reported	46	4	22	3	29	11	5	1	17
TOTAL	497	75	143	30	248	136	83	30	249

(1) Water usage data was derived from the 308 database. See text for further description of the database used to estimate industry water usage.

(2) Other discharge methods include zero discharge, land application, deep well injection, incineration, contractor removal, evaporation, and discharge to septic and leachate fields.

TABLE V-7

SUMMARY OF DIRECT PROCESS CONTACT WATER USAGE FOR
PLASTICS-ONLY AND NOT PLASTICS-ONLY PLANTS IN THE 308 SURVEY (1)

Direct Process Contact Water Usage (MGD)	Total Number of Plants	PLASTICS-ONLY PLANTS				NOT PLASTICS-ONLY PLANTS			
		Direct Dischargers	Indirect Dischargers	Other (2) Dischargers	All Plastics Plants	Direct Dischargers	Indirect Dischargers	Other (2) Dischargers	All Not Plastics Plants
<0.001	25	1	15	5	21	1	2	1	4
0.001-0.01	92	5	41	10	56	15	10	11	36
0.01-0.1	105	11	34	5	50	27	20	8	55
0.1-1.0	125	33	21	1	55	44	22	4	70
1.0-10.0	73	18	7	0	25	31	15	2	48
>10.0	8	1	0	0	1	3	4	0	7
No data reported	69	6	25	9	40	15	10	4	29
TOTAL	497	75	143	30	248	136	83	30	249

(1) Water usage data was derived from the 308 database. See text further description of the database used to estimate industry water usage.

(2) Other discharge methods include zero discharge, land application, deep well injection, incineration, contractor removal, evaporation, and discharge to septic and leachate fields.

TABLE V-8

WATER RECIRCULATED AND REUSED BY USE FOR THE OCPSF INDUSTRIES
1978 CENSUS DATA (a)

INDUSTRY GROUP (by SIC Code)	NO. OF ESTABLISHMENTS REPORTING RECIRC/REUSE (AS % OF EST. SURVEYED)		WATER RECIRCULATED BY USE (Billions of Gallons) (b)						
					Cooling and Condensing				
			Total	Process	Steam Electric Power Generation	Air Conditioning	Other	Sanitary Service	Boiler Feed
Organic Chemicals									
2865	51	(67%)	279	1.3	(c)	0.2	274	-	3.4
2869	165	(84%)	3,583	76	(c)	33	3,380	(c)	51
Total	216	(79%)	3,862	78	-	34	3,654	-	54
Plastics/Synthetic Fibers									
2821	102	(77%)	653	62	(c)	(c)	575	(c)	8.8
2823	6	(86%)	89	(c)	(c)	6	45	-	(c)
2824	32	(78%)	458	44	36	163	205	(c)	2.8
Total	140	(78%)	1,200	-	-	-	825	-	-
TOTAL	356	(79%)	5,062	-	-	-	4,479	-	-

SOURCE: Bureau of the Census 1981

(a) Represents data collected in a special 1978 Survey of Water Use for establishments using 20 million gallons or more of water/year in 1977; smaller volume users were excluded in this survey.

(b) Water Recirculated and Reused was defined as the volume of water recirculated multiplied by the number of times recirculated; e.g., if 100 million gallons of intake water were recirculated twice, the manufacturer reported recirculation/reuse of 200 million gallons.

(c) Data withheld to avoid disclosing operations of individual companies.

scaling, a portion of such closed system waters is periodically discharged as blowdown and replaced by clean water.

The recycling of treated process contact wastewaters is limited because existing wastewater treatment facilities, primarily biological systems, rarely produce effluents which meet the water quality required of even the least stringent manufacturing plant uses, such as make-up water for most heat exchange systems. According to Census Bureau statistics, recirculated process water constitutes less than 4 percent of all water recirculated.

TABLE V-9 presents data from the 308 Survey on plants that practice total recycling of process contact wastewater streams and consequently do not discharge their effluents to surface waters or to POTWs. Of the 291 direct and zero discharge plants in the 308 database, 32 percent (94 plants) use alternate methods of wastewater disposal (i.e., do not discharge to surface waters or to POTWs); of these 94 plants, only 24 report recycling all of their process contact wastewaters. Thus, although about 80 percent of plants in the OCPSF Industries practice some reuse of industrial water, less than 10 percent eliminate discharge of process contact wastewaters through recycling.

Water Conservation and Reuse Technologies. A variety of water conservation practices and technologies are available to OCPSF plants. Because of the diversity within the OCPSF Industries, no one set of conservation practices and/or technologies is appropriate for all plants. Decisions regarding water reuse and conservation depend on plant-specific characteristics as well as site-specific water-supply and environmental factors (e.g., water availability, cost and quality). Therefore, this section will describe the range of practices and technologies available for water conservation.

Conventional water conservation practices include (McGovern 1973, and Holiday 1982):

- Recovery and reuse of steam condensates, and process condensates where possible.
- Process modifications to recover more product and solvents.
- Effective control of cooling-tower treatment and blowdown to optimize cycles of concentration.
- Elimination of contact cooling for off vapors.
- Careful monitoring of water users; maintenance of raw-water treatment systems; and prompt attention to faulty equipment, leaks and other problems.
- Installation of automatic monitoring and alarm systems on in-plant discharges.

TABLE V-10 summarizes water conservation technologies, and their applications, limitations, and relative costs to industry plants. Some of these technologies, such as steam stripping, are also considered effluent pollution

TABLE V-9

PLANTS REPORTING RECYCLING OF ALL PROCESS CONTACT WASTEWATERS (a)

	PLANTS			STREAMS		
PLANT TYPE	Number in Database	Number Recycling	Percent Recycling	Number in Database	Number Recycling	Percent Recycling
Plastics-Only	118	9	7.6	146	10	6.8
Not Plastics-Only	173	15	8.7	231	15	6.5
Total	291	24	8.2	377	25	6.6

(a) From 291 plants responding to the 1976 BPT and the 1977 BAT 308 Questionnaires; direct and zero discharge plants only. See also Table VII-1 of the BPT document, Volume I of this Development Document.

TABLE V-10

WATER CONSERVATION AND REUSE TECHNOLOGIES

TECHNIQUE	APPLICATIONS	LIMITATIONS	RELATIVE COSTS Capital	RELATIVE COSTS Operating	COMMENTS
Vapor-compression evaporation	Concentration of wastewater or cooling -tower blowdown Concurrent production of high-purity water	Not for organics that form azeotropes or steam-distill Fouling must be controllable	High	High	Rapid growth High-quality distillate handles broad range of contaminants in water
Waste heat evaporation	Concentration of wastewater Condensate recovery	Not for organics that form azeotropes or steam-distill	Medium	Medium	Not widely used now Future potential good
Reverse osmosis, ultrafiltration	Removal of ionized salts, plus many organics Recovery of heavy metals, colloidal material Production of ultrapure water	Fouling-sensitive Stream must not degrade membranes Reject stream may be high-volume	Medium	Medium	Future potential strong Intense application development underway
Electrodialysis	Potable water from saline or brackish source	Limited to ionizable salts	Medium-high	Medium	Modest future potential
Steam stripping	Recovery of process condensates and other contaminated waters Recovery of H_2S, NH_3 plus some light organics	Stripped condensates may need further processing	Medium	Medium-high	Well-established as part of some processes
Combination wet/dry cooling towers	Puts part of tower load on air fins Can cut fogging	Costly compared with wet cooling tower	Medium	Medium	Growth expected in arid areas
Air-fin cooling	Numerous process applications	For higher-level heat transfer Can be prone to freeze-up, waxing	Medium	Medium	Well-established Good for higher-temperaature heat rejection
Sidestream softening	Reduce cooling-tower blowdown	Dissolved solids must be removable Control can be difficult	Low-medium	Low-medium	Not widely used Future potential good

SOURCE: Holiday 1982

V-14

control technologies. Water conservation, in fact, can often be a benefit of mandated pollution control.

OCCURRENCE AND PREDICTION OF PRIORITY POLLUTANTS

The Clean Water Act required the Agency to develop data characterizing the presence (or absence) of 129 priority pollutants in raw and treated wastewaters of the Organic Chemicals and Plastics/Synthetic Fibers Industries. These data have been gathered by EPA from two sources: existing wastewater data previously gathered by individual plants within these industries; and extensive sampling and analysis of individual process wastewaters in these industries. An adjunct to these data collection efforts was the evaluation of which priority pollutants would be likely to occur from consideration of the reactants and reaction pathway. This process has the advantage of being able to predict qualitatively pollutants likely to be present in plant wastewaters from knowledge of starting materials and chemical reaction. A systematic means of anticipating the occurrence of priority pollutants is beneficial to both the development and implementation of regulatory guidelines:

1. Industry-wide qualitative product/process coverage becomes feasible without the necessity of sampling and analyzing hundreds of effluents beyond major product/processes. By focusing resources on any additional product/processes that are probable sources of priority pollutants, the data required for regulation development can be accrued more cost-effectively.

2. Guidance is provided for discharge permit writers, permit applicants, or anyone trying to anticipate priority pollutants that are likely to be found in the combined wastewaters of a chemical plant when the product/processes operating at the facility are known.

Qualitative prediction of priority pollutants for these industries is possible because, claims of uniqueness not withstanding, all plants within the OCPSF Industries are alike in one important sense: all transform feedstocks to products by chemical reactions and physical processes in a stepwise fashion. Though each transformation represents at least one chemical reaction, virtually all can be classified by one or more generalized chemical reactions/processes. Imposition of these processes upon the eight basic feedstocks lead to commercially produced organic chemicals and plastics. It is the permutation of the feedstock/process combinations that permit the industries to produce such a wide variety of products.

Chemical manufacturing plants share a second important similarity: chemical processes never convert 100% of the feedstocks to the desired products; that is, the chemical reactions/processes never proceed to total completion. Moreover, because there are generally a variety of reaction pathways available to reactants, undesirable by-products are often unavoidably generated. This results in a mixture of unreacted raw materials and products that must be separated and recovered by unit operations that often generate residues with little or no commercial value. These yield losses appear in process contact wastewater, in air emissions, or directly as chemical wastes. The specific

chemicals that appear as yield losses are determined by the feedstock and the process chemistry imposed upon it, i.e., the feedstock/generic process combination.

General

Potentially, an extremely wide variety of compounds could form within a given process. The formation of products from reactants depends upon the relationship of the free enthalpies of products and reactants; more important however is the existence of suitable reaction pathways. The rate at which such transformations occur cannot (in general) be calculated from first principles and must be empirically derived. Detailed thermodynamic calculations therefore are of limited value in predicting the entire spectrum of products produced in a process since both the identity of true reacting species and the assumption of equilibrium between reacting species are often speculative. Although kinetic models can in principle predict the entire spectrum of products formed in a process, kinetic data concerning minor side reactions are generally unavailable. Thus, neither thermodynamic nor kinetic analyses alone can be used for prediction of specie formation.[1] What these analyses do provide, however, is a framework within which pollutant formation may be considered and generalized.

The reaction chemistry of a process sequence is controlled through careful adjustment and maintenance of conditions in the reaction vessel. The physical condition of species present (liquid, solid, or gaseous phase), conditions of temperature and pressure, the presence of solvents and catalysts, and the configuration of process equipment are designed to favor a reaction pathway by which a particular product is produced. From this knowledge, it is possible to identify reactive intermediates and thus anticipate species (potential pollutants) formed.

The bulk of chemical transformations performed by the industry have long been reduced to a small number of basic steps or unit processes (Shreve 1977). Each step or process represents a chemical modification labeled a "generic process." For example, the generic process "nitration" may represent either the substitution or addition of an "$-NO_2$" functional group to an organic substrate. Generic processes may be quite complex from a chemical standpoint however; any reaction in which a large number of bonds are broken necessarily requires passage through a number of distinct (if transitory) intermediates. Simple stoichiometic equations, therefore, are inadequate

---

[1]Prediction of pollutant formation is necessarily of a qualitative rather than quantitative nature; though reactive intermediates may be identified without extensive kinetic measurements, their rate of formation (and thus quantities produced) are difficult to predict without kinetic measurements. Other quantitative approaches, for example, detailed calculation of an equilibrium composition by minimization of the free energy of a system, require complete specification of all species to be considered. Because such methods necessarily assume equilibrium, the concentrations generated by such methods represent only trends or, perhaps at best, concentration ratios.

descriptions of chemical reactions and only rarely account for observed by-products.

TABLE V-11 lists the major organic chemicals produced by industry (approximately 250) by process, and TABLE V-12 gives the same information for the plastics/synthetic fibers industry. Certain products shown in Table V-11 are not derived from primary feedstocks but rather from secondary or higher order materials (e.g., aniline is produced by hydrogenation of nitrobenzene that is produced by nitration of benzene). For such multistep syntheses, generic processes appropriate to each step must be evaluated separately. For commodity chemicals generally it is sufficient to specify a feedstock and a single generic process. Nitration of benzene to produce nitrobenzene for example is sufficient description to predict composition of process wastewaters: nitrophenols will be the principal process wastewater constituents. Similarly oxidation of butane to produce acetic acid results in wastewaters containing a wide variety of oxidized species including formaldehyde, methanol, acetaldehyde, n-propanol, acetone, methyl ethyl ketone, etc.

Specialty chemicals on the other hand may involve several chemical reactions and require a fuller description. For example, preparation of toluene diisocyanate from commodity chemicals involves four synthetic steps and three generic processes as shown below.

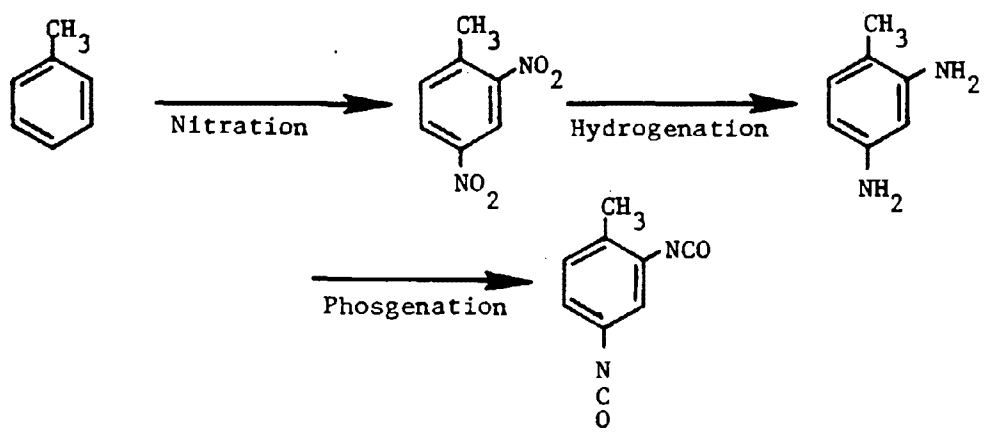

This example in fact is relatively simple and manufacture of other specialty chemicals is more complex. Thus as individual chemicals become further removed from the basic feedstocks of the industry, fuller description is required for unique specification of process wastewaters. A mechanistic analysis of individual generic processes, permits a spectrum of product classes to be associated with every generic process. Each product class

TABLE V-11

GENERIC PROCESSES USED TO MANUFACTURE ORGANIC CHEMICAL PRODUCTS

ALCOHOLS																									
Dimethyl Benzyl Alcohol	Dipropylene Glycol	Dodecanethiol	Ethanethiol	Ethanol	Ethyl Orthoformate	Ethylene Glycol	2-Ethyl-Hexanol	Glycerine	2-Methyl-2,4-Pentanediol	1,6-Hexanediol	Isobutanol	Isopropanol	Methanol	Methyl Isobutyl Carbinol	Methyl Orthoformate	1-Nonanethiol	1-Octanethiol	Pentaerythritol	1-Propanethiol	n-Propyl Alcohol	Tetraethylene Glycol	Triethylene Glycol	Trimethylolpropane	Tripropylene Glycol	Xylenol
																					●	●		●	
							●		○					○				○					○		
						●				○															
		○				●		●								○	○								
							●		○	○	●		●	○						●					
										○															
											●		●							●					
							●																		
																									○
○	●	○	○		○										○	○	○	○	○						
												●													
				●				●																	

ALDEHYDES								
Acetaldehyde	Acrolein	Benzaldehyde	n-Butyraldehyde	Formaldehyde	Glyoxal	Isobutyraldehyde	Propionaldehyde	1,2,3,6-Tetrahydrobenzaldehyde
●	●	●		●	○			○
								○
			○			○	●	

AMINES																						
Alkyl Amines	Aminoethylethanolamine	Aniline	Anisidine	1,3-Cyclohexane bis (methylamine)	Diaminodiphenylmethane	Diethylene Triamine	N,N-Dimethylaniline	N,N-Dimethylformamide	Diphenylamine	Ethylamine	Ethylenediamine	Hexamethyleneimine	Hexamethylenetetramine	Hexamethylene diamine	Hydroxylamine	1-Naphthyl N-Methylcarbamate	N-Nitrosodiphenylamine	2-Pyrrolidone	p-Nitroaniline	Tetraethylenepentamine	Toluidine	Toluenediamine
	○																					
				○	●	○	○		○				○									
																	○					
															○							
		●			●							●		●							○	●
																○						
○						○	○	○		○	●							○		○		
		●																	○			●
			○																			

AMIDES					ANHYDRIDES						
Acrylamide	Caprolactam	4-Chloroacetanilide	Dimethylacetamide	Formamide	Acetic Anhydride	Maleic Anhydride	Phthalic Anhydride	Tetrachlorophthalic Anhydride	Trimellitic Anhydride	Ethylene Oxide	Propylene Oxide
		○						●			
	●					●	●	●	○	●	
○											
	●										
	●			○							
					●	●	●	●	○		
			○								●

ESTERS																											
Acrylic Acid Esters	Amyl Acetate	n-Butyl Acetate	Butyl Benzyl Phthalate	Butyrolactone	n-Butyl Lactate	Dibutyl Phthalate	Diethyl Phenyl Phosphate	Diethyl Phthalate	Dimethyl Malonate	Dimethyl Phthalate	Dimethyl Sulfate	Dimethyl Terephthalate	Dodecylguanidine Acetate	Ethyl Acetate	Ethylcyanoacetate	Ethyl Hexyl Phthalate	Isobutyl Acetate	Isopropyl Acetate	Methacrylic Esters	Methyl Cyanoacetate	Methyl Formate	Methyl Methacrylate	Methyl Salicylate	Nitrilotriacetate	Phenyl Glycine	n-Propyl Acetate	Vinyl Acetate
●												●															
●	●	○	●	○	○	●	○	●	○	●	○	●		○	○	●	○	○	●	○	○	●	●			●	●
													○											○	○		
																○			●			●					●

GENERI

GENERIC PROCESS	ACIDS																																							
	Acetic Acid	Acrylic Acid	Adipic Acid	Benzoic Acid	n-Butyric Acid	Chlorosulfonic Acid	Cyanoacetic Acid	Ethylenediaminetetraacetic Acid	2-Ethyl-Hexanoic Acid	Fumaric Acid	Glutamic Acid	Hydroxyacetic Acid (Glycolic)	Iminodiacetic Acid	Isobutyric Acid	Isophthalic Acid	Methacrylic Acid	N-Methyl Glycine	2-Methyl-5-Nitrobenzene	Sulfonic Acid	Neopentanoic Acid	Propionic Acid	Sulfanilic Acid	Terephthalic Acid	Trimethoxybenzoic Acid	Allyl Alcohol	1,3-Butanediol	1,4-Butanediol	1-Butanethiol	n-Butanol	Sec-Butanol	Tert-Butanol	Cyclohexanol	1-Decanethiol	Diacetone Alcohol	Dimethylaminoethanol	Dimethyl Benzyl Alcohol	Dipropylene Glycol	Dodecanethiol	Ethanethiol	
ALKOXYLATION																																								
CONDENSATION																										○								○						
HALOGENATION						○						○																												
OXIDATION	●	●	●	●	○				○					○	○					●	●		●	○							○	●			●					
POLYMERIZATION																																								
HYDROLYSIS											○	○				●															○							○		
HYDROGENATION																									●	○			●			●								
ESTERIFICATION																																								
PYROLYSIS																																								
ALKYLATION																																								
DEHYDROGENATION																																								
AMINATION (AMMONOLYSIS)								○					○				○																		●					
NITRATION																		●																						
SULFONATION						○												○				○																		
AMMOXIDATION																																								
CARBONYLATION																				●									●											
HYDROHALOGENATION																																								
DEHYDRATION																																								
DEHYDROHALOGENATION																																								
OXYHALOGENATION																																								
CATALYTIC CRACKING																																								
HYDRODEALKYLATION																																								
PHOSGENATION																																								
EXTRACTION																																								
DISTILLATION																																								
OTHER							○			●						●									●	●	○	○					○			○	●	○	○	
HYDRATION																														●										●

● Product/Process Effluent Sampled by OCB
○ Product/Process Effluent Not Sampled

V 14

TABLE V-II (Continued)

GENERIC PROCESSES USED TO MANUFACTURE ORGANIC CHEMICAL PRODUCTS

RBONS															
Methyl Bromide	Methyl Chloride	Methylene Chloride	o,p-Dichlorobenzene	Pentachlorobenzene	Phosgene	1,2,4,5-Tetrachlorobenzene	1,1,2,2-Tetrachloroethane	Tetrachloroethene	Trichlorobenzene	1,1,1-Trichloroethane	Trichloroethene	Trichlorofluoromethane	Trichloropropene	Vinyl Chloride	Vinylidene Chloride
	●	●	●	○	○	●	○	●	●	○	●		○	○	●
○	○									○		●			
														○	●
											●			○	

HYDROCARBONS																														
Acenaphthene	Acetylene	Anthracene	Benzene	Benzopyrene	Biphenyl	Butadiene	Butane	Butene	Cumene	Cyclopentadiene Dimer	Diisopropyl Benzene	Ethane	Ethene	Ethylbenzene	Heptane	Hexane	Isoamylene	Isobutane	Isopentane	Isoprene	Methane	Methylstyrene	Naphthalene	Octane	Pentane	Propane	Propene	Styrene	Toluene	Xylenes
																	●													
	●		●										●				○										●		●	●
									●		●			●								●						●		
					○	○		○														●						●		
																	●													
																○														
			●																											○
						●		●		●								●		●										
○		○	●	○		●	○	●		●		●		●	○	○		●	○	●			●	○	○	○			●	●
																					○									●

KETONES								
Acetone	Acetophenone	Anthraquinone	Cyclohexanone	Diketene	Isophorone	Mesityl Oxide	Methyl Ethyl Ketone	Methylisobutyl Ketone
		○			○	○		○
●		○	●					
								○
●								
			●				●	
				●	○	○		○
●	○			●			●	

NITRILES				
Acetonitrile	Acrylonitrile	Adiponitrile	n-Butyronitrile	Isobutyronitrile
		○		
		●		
		●		
○	●			
		●		
		●	○	○

NITRO-CARBONS				
Dinitrobenzenes	Dinitrotoluenes	Nitrobenzene	4-Nitroethoxybenzene	Nitrotoluene
○	●	●	○	●

PHENOLS											
Alkyl Phenols	p-Aminophenol	Bisphenol A	o-Cresol	Creosote	2,6-Diethylphenol	2,2-Methylenebis(6-butyl-p-cresol)	2,2-Methylenebis(6-butyl-4-ethylphenol),	2-Nitrophenol	4-Nitrophenol	Hydroquinone	Phenol
		●				○	○				
										●	●
	○										
●											●
								○	○		
			○		○						○
			○	●	○						○
	○										●

SALTS		
Choline Chloride	Sodium Benzoate	Sodium Formate
	●	
○		
	●	○

MISCELLANEOUS																	
2-Benzothiazolethiol	Benzoyl Peroxide	Carbon Disulfide	Cyanuric Acid	Dichlorodiphenyl Sulfone	2,2-Dithiobis (Benzothiazole)	Furazolidone	Methylene Diphenyl Diisocyanate	Tetrahydrothiophene	Tetramethyl Lead	2-(Morpholinothio)-Benzothiazole	Thiophene	Toluene Sulfonamide	Toluenesulfonyl Chloride	Toluene-2,6-Diisocyanate	N-Vinyl-2-Pyrrolidone	Xylenesulfonic Acid	N-Methyl-2-Pyrrolidone
			○		○		●	○									
	○				○	○											
								○						●			
									○								
		○									○						
										○		○					
						○								●			
				○								○	○			○	
							●							●			
○				○									○		○		○

Preceding page blank

GENERIC PROCESS	ETHERS					HALOCARBONS																						
	Bis-(2-Chloroisopropyl) Ether	o-Chlorophenyl Phenyl Ether	Diethyl Sulfide	Dimethyl Ether	Dimethyl Sulfide	Ethylene Glycol Monomethyl Ether	Methoxydihydropyran	Sulfolane	Allyl Chloride	Benzyl Chloride	Carbon Tetrachloride	Chlorobenzene	m-Chloronitrobenzene	Chlorobutadiene (Chloroprene)	Chlorodifluoromethane	Chloroform	o-Chloronitrobenzene	Dichlorodifluoromethane	1,1-Dichloroethane	1,2-Dichloroethane	Dichloronitrobenzene	1,2-Dichloropropane	Dichloropropene	Epichlorohydrin	Ethyl Chloride	Hexachlorobenzene	Hexachloroethane	Methyl Bromide	Methyl Chloride	Methylene Chloride	o,p-Dichlorobenzenes	Pentachlorobenzene	Phosgene
ALKOXYLATION						○																											
CONDENSATION	○																																
HALOGENATION		○							●	●	●	●	○		●	○	●	○	●	○	○	●	●			○	○		●	●	●	○	○
OXIDATION																																	
POLYMERIZATION																																	
HYDROLYSIS																																	
HYDROGENATION								○																									
ESTERIFICATION																																	
PYROLYSIS																																	
ALKYLATION																																	
DEHYDROGENATION														○																			
AMINATION (AMMONOLYSIS)																																	
NITRATION													●			○				○													
SULFONATION																																	
AMMOXIDATION																																	
CARBONYLATION																																	
HYDROHALOGENATION															●	○									○			○	○				
DEHYDRATION				○																													
DEHYDROHALOGENATION																						○		●									
OXYHALOGENATION																			●														
CATALYTIC CRACKING																																	
HYDRODEALKYLATION																																	
PHOSGENATION																																	
EXTRACTION																																	
DISTILLATION																																	
OTHER			○		○		○	○																●									
HYDRATION																																	

● Product/Process Effluent Sampled by OCB
○ Product/Process Effluent Not Sampled

TABLE V-12

MAJOR PLASTICS AND SYNTHETIC FIBERS PRODUCTS BY GENERIC PROCESS

GENERIC PROCESS	ABS RESINS	ACRYLIC RESINS	ACRYLIC FIBERS	ACRYLIC LATEX	Acrylamide Resins	ALKYD RESINS	Carboxymethyl Cellulose	Cellophane	CELLULOSE ACETATE	Cellulose Nitrate	Cellulose Sponge	Epoxidized Esters	EPOXY RESINS	MELAMINE RESINS	Methyl Cellulose	Modacrylic Resins	NYLON SALT	NYLON 6 RESIN	NYLON 66 RESIN	PETROLEUM HYDROCARBON RESINS	Polyacetal Resins	Polyamides	Polybutadiene Resins	Polyester Fibers	POLYESTER RESINS	Polyethylene Oxide	POLYETHYLENE RESINS	POLYMERIC METHYLENE DIPHENYL DIISOCYANATE	POLYPROPYLENE RESINS	POLYOXYPROPYLENE GLYCOL	POLYSTYRENE	Polysulfonic Resins	POLYVINYL ACETATE RESINS	POLYVINYL CHLORIDE	Polyvinyl Pyrrolidone	RAYON	SAN RESINS	STYRENE-BUTADIENE RESIN	Styrene Maleic Anhydride Resins	Styrene Methyl Methacrylate Resins	UNSATURATED POLYESTER RESINS	UREA RESINS
ADDITION POLYMERIZATION																																										
Mass																																		●		●						
Emulsion		●	●																														●	●				●				
Suspension				●																							●				●			●		●				●		
Solvent					●												●												●													
Solvent-nonsolvent																																										
Other[a]							●		●	●																	●															
CONDENSATION POLYMERIZATION						●							●	●	●	●			●	●			●		●			●		●							●			●		●	●

[a]Ring opening and other "addition" polymerization processes in which the polymer grows in a manner other than by a chain reaction.

Preceding page blank

represents compounds that are structurally related to a feedstock through the chemical modification afforded by the generic process.[2]

Product/Process Chemistry Overview

The primary feedstocks of the Organic Chemicals Industry include: benzene, toluene, o,p-xylene, ethene, propene, butane/butene and methane; secondary feedstocks include the principal intermediates of the synthetic routes to high volume organic chemicals and plastics/synthetic fibers. Other products that are extraneous to these routes, but are priority pollutants, are also considered because of their obvious importance to guideline development.

Flow charts used to illustrate a profile of the key products of the two categories were constructed by compositing the synthetic routes from crude oil fractions, natural gas, and coal tar distillates (three sources of primary feedstocks) to the major plastics and synthetic fibers. FIGURES V-1 THROUGH V-7 depict the routes through the eight primary feedstocks and various intermediates to commercially produced organic chemicals; FIGURES V-8 and V-9 show the combinations of monomers that are polymerized in the manufacture of major plastics and synthetic fiber products. Also shown in Figures V-1 through V-7 are processes in current use within these industries.

These charts illustrate the dendritic structure of this industry's product profile (i.e., several products derive from the same precursor). By changing the specific conditions of a process, or use of a different process, several different groups of products can be manufactured from the same feedstock. There is an obvious advantage in having to purchase and maintain a supply of as few precursors (feedstocks) and solvents as possible. It is also important to integrate the product mix at a plant so that one product provides feedstock for another. A typical chemical plant is a community of production areas, each of which may produce a different product group. While the product mix at a given plant is self-consistently interrelated, a different mix of products may be manufactured from plant-to-plant. Thus, a plant's product mix may be independent of, or may complement the product mix at other plants within a corporate system.

The synthetic routes to priority pollutants are illustrated in FIGURES V-10 THROUGH V-14; these flow charts provide a separate scheme for each of the following five classes of generic groups of priority pollutants.

1. Nitroaromatic compounds, nitrophenols, phenols, benzidines and nitrosamines.

2. Chlorophenols, chloroaromatic compounds, chloropolyaromatic compounds, haloaryl ethers and PCB's.

---

[2]Limited plant data however were available by which to assign generic processes to a product and in many cases the product was specified while the feedstock was not. In such cases a generic process assignment was made on the basis of process chemistry and engineering; i.e., judgment was made as to the feedstock and chemistry employed at the plant. This analysis has been previously discussed in Volume 1 of this document.

FIGURE V-1

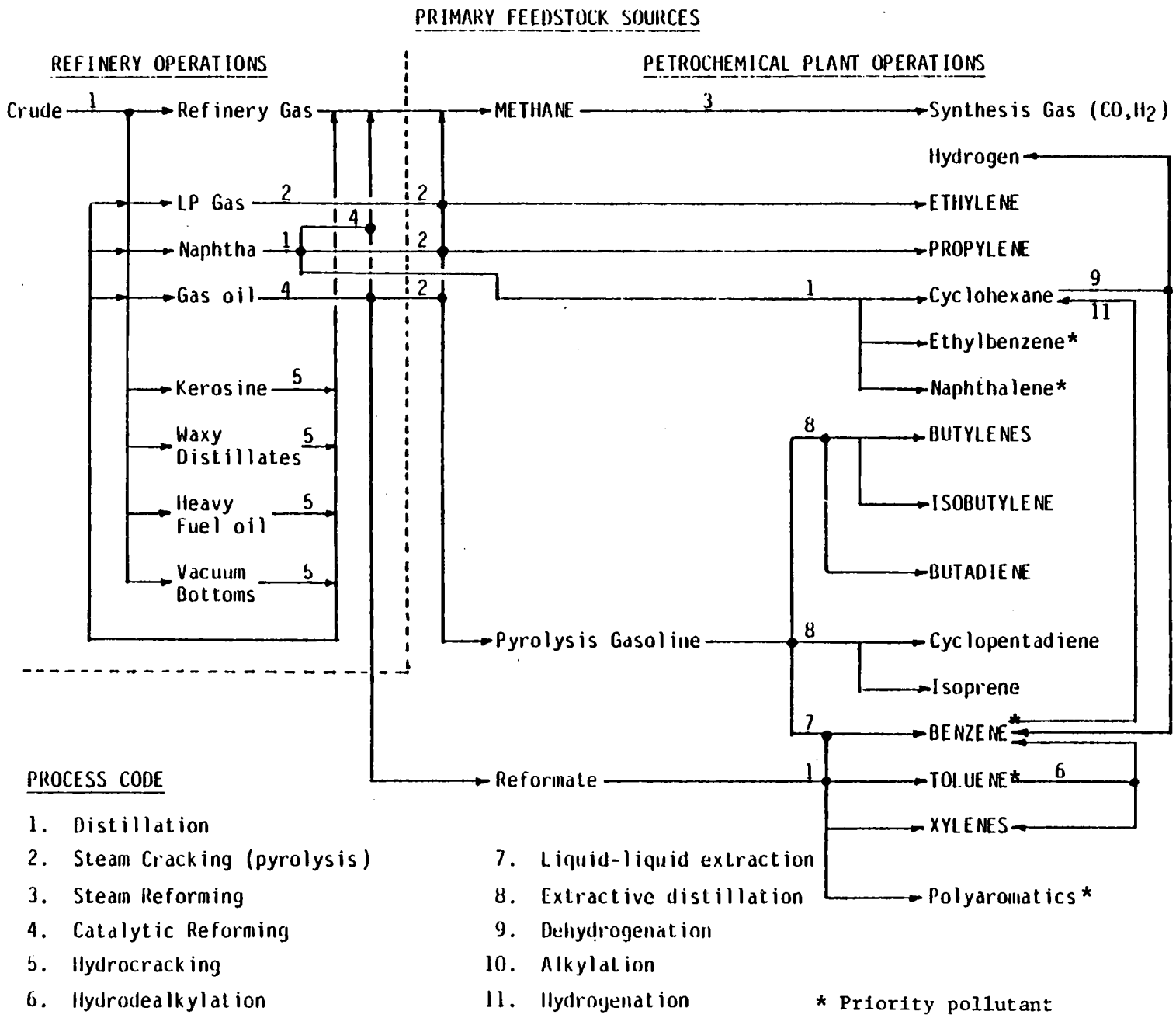

PROCESS CODE

1. Distillation
2. Steam Cracking (pyrolysis)
3. Steam Reforming
4. Catalytic Reforming
5. Hydrocracking
6. Hydrodealkylation
7. Liquid-liquid extraction
8. Extractive distillation
9. Dehydrogenation
10. Alkylation
11. Hydrogenation

* Priority pollutant

FIGURE V-2

Coal Tar Refining

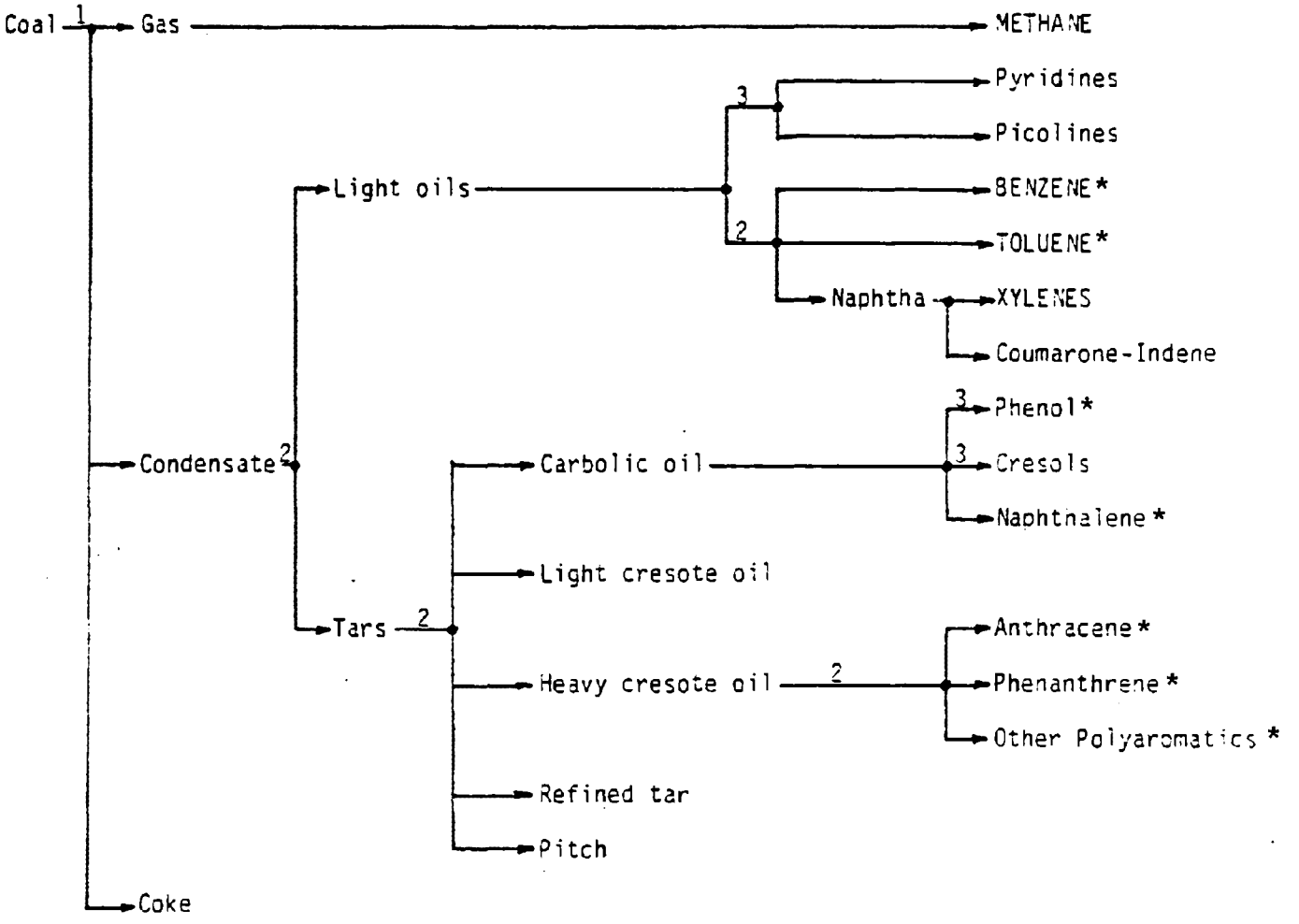

Process Code

1. Pyrolysis
2. Distillation
3. Liquid-liquid extraction (pH adjust)

* Priority pollutant

FIGURE V-3

METHANE

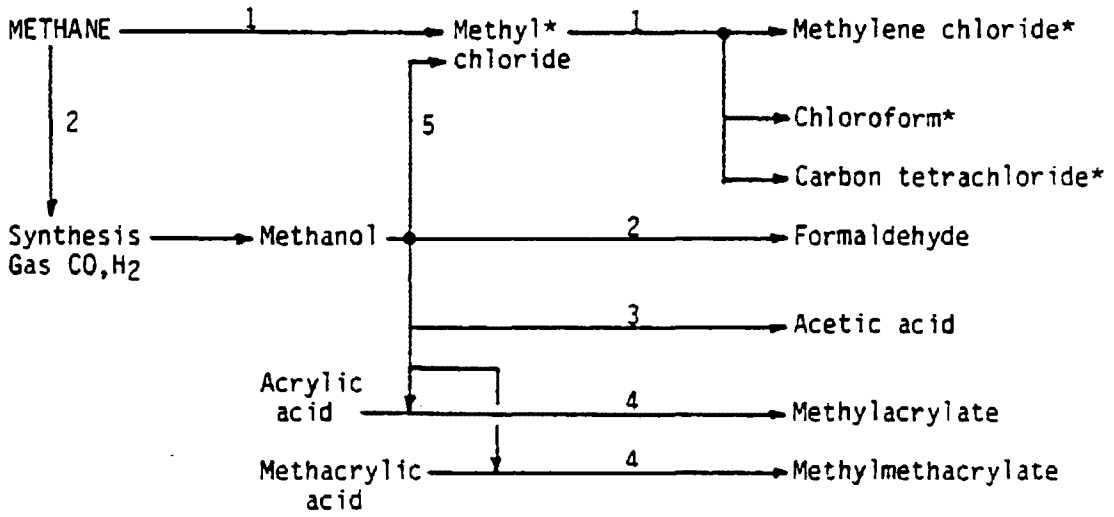

Generic Processes:

1. Chlorination
2. Oxidation
3. Oxo carbonylation
4. Esterification
5. Hydrochlorination

*Priority pollutant

FIGURE V-4

ETHYLENE

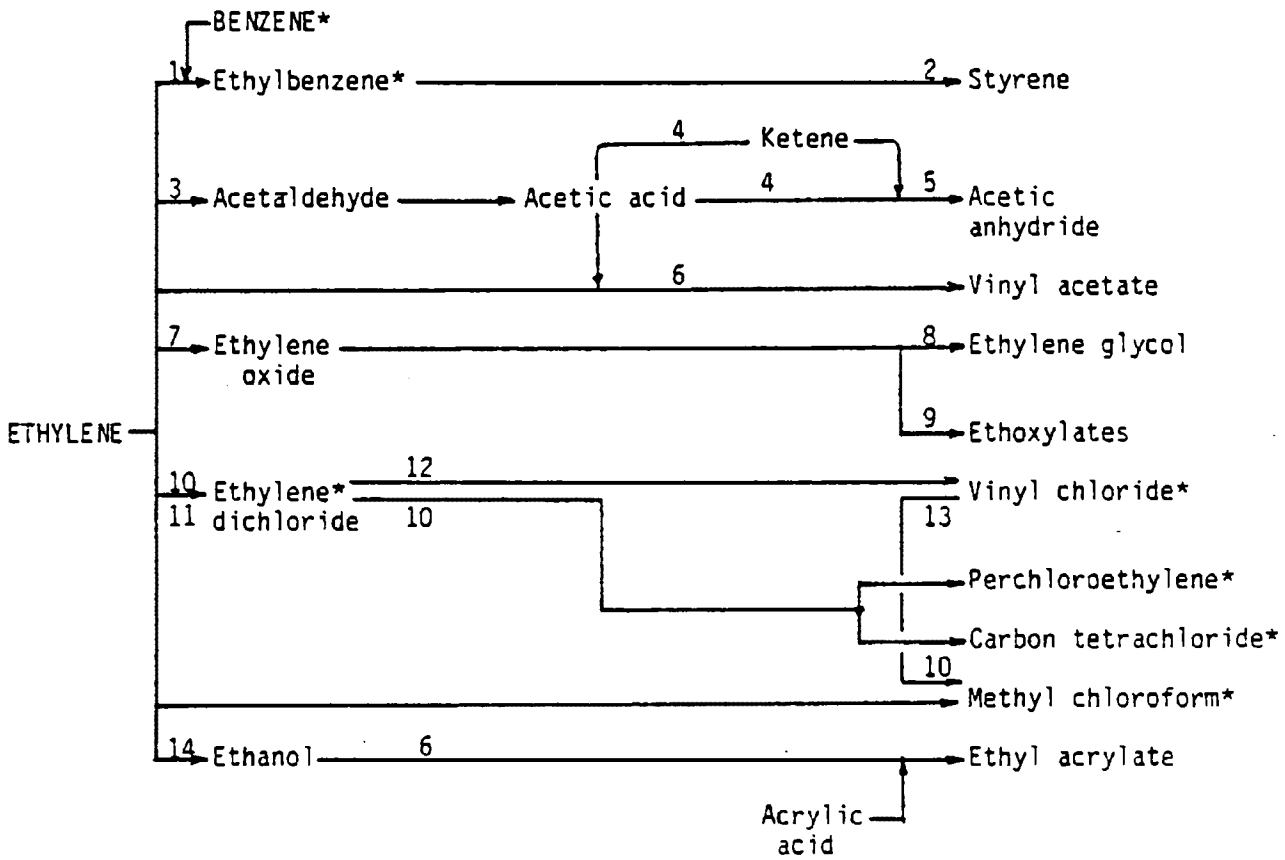

Generic Processes:

1. Alkylation
2. Dehydrogenation
3. Oxidation
4. Dehydration
5. Condensation
6. Esterification
7. Epoxidation
8. Hydrolysis
9. Ethoxylation
10. Chlorination
11. Oxychlorination
12. Dehydrochlorination
13. Hydrochlorination
14. Direct Hydration

*Priority pollutant

FIGURE V-5

PROPYLENE

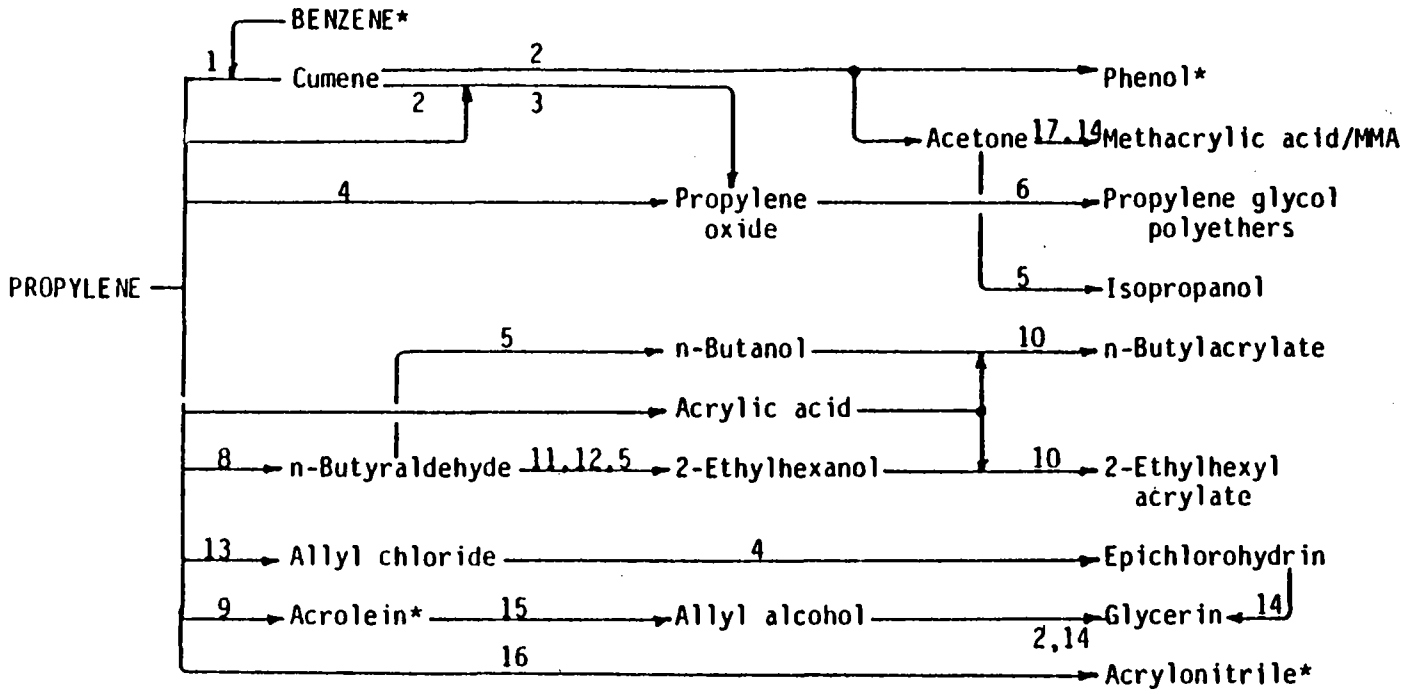

Generic Processes:

1. Alkylation
2. Peroxidation
3. Epoxidation
4. Chlorohydrination
5. Hydrogenation
6. Propoxylation
7. Direct hydration
8. Oxo
9. Oxidation
10. Esterification
11. Aldol condensation
12. Dehydration
13. Chlorination
14. Hydrolysis
15. Reduction
16. Ammoxidation
17. Cyanation

*Priority pollutant

FIGURE V-6

BUTANES/BUTENES

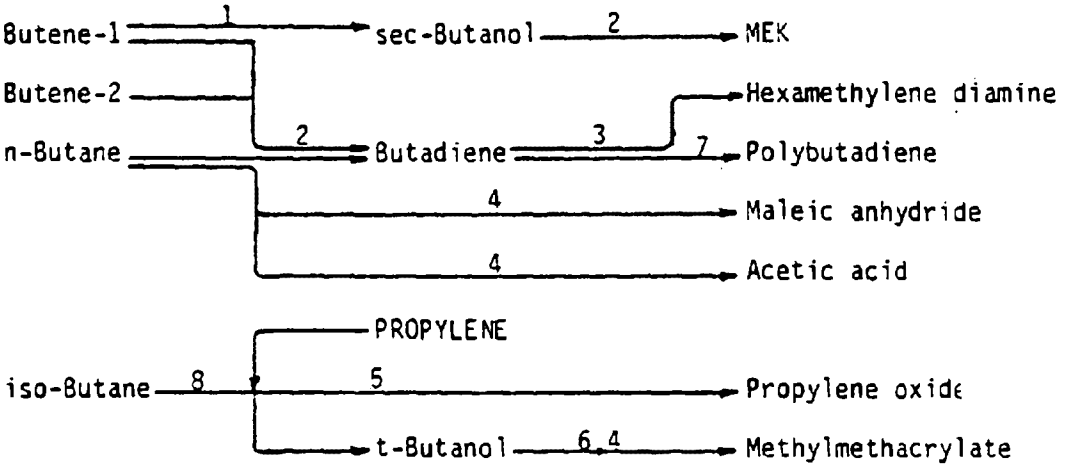

Generic Processes:

1. Hydration
2. Dehydrogenation
3. Chlorination/cyanation
4. Oxidation
5. Epoxidation
6. Dehydration
7. Polymerization
8. Peroxidation

FIGURE V-7

AROMATICS

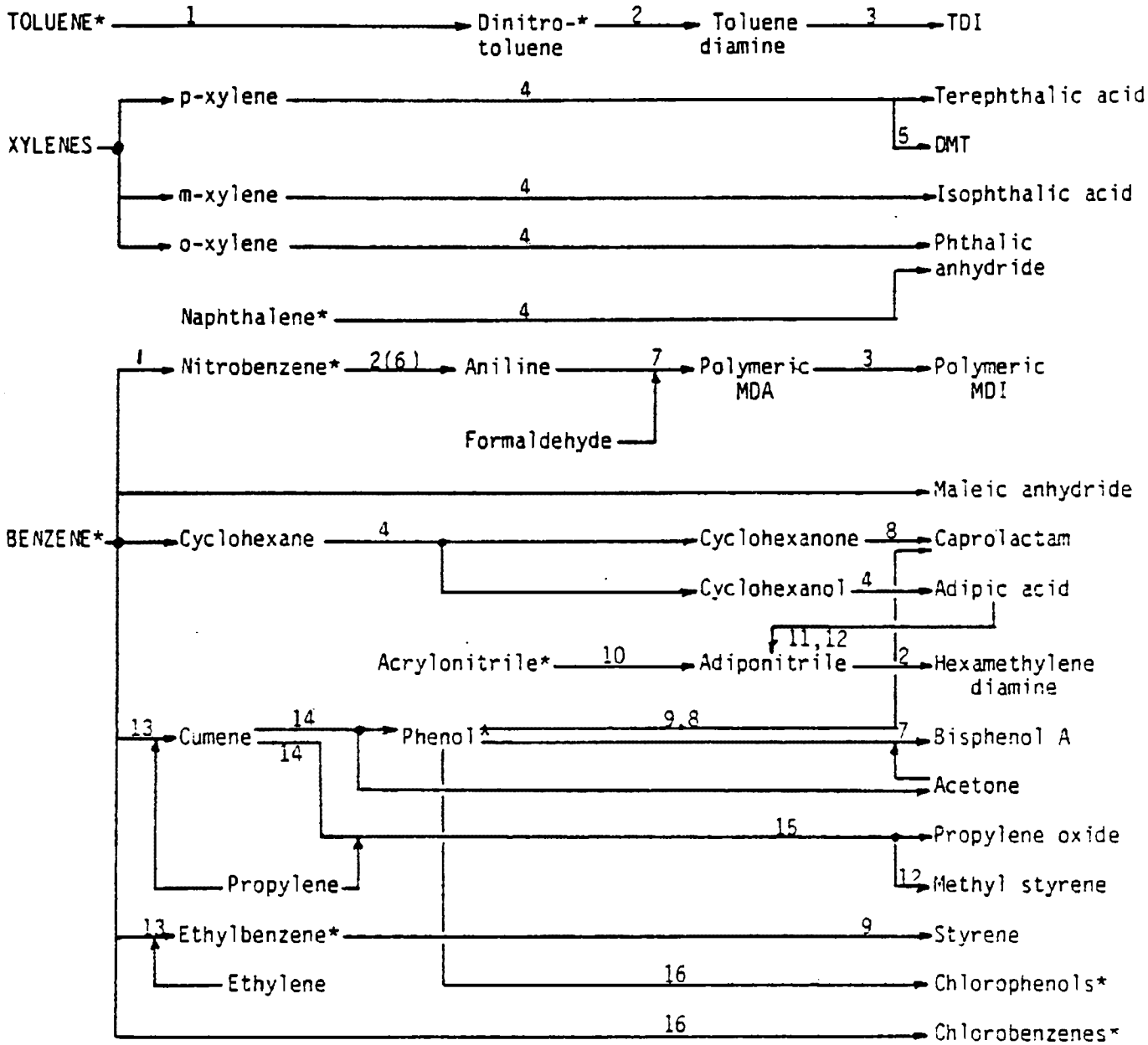

Generic Processes:

1. Nitration
2. Hydrogenation
3. Phosgenation
4. Oxidation
5. Esterification
6. Reduction
7. Condensation
8. Oximation/ Rearrangement
9. Dehydrogenation
10. Hydrodimerization
11. Amidification
12. Dehydration
13. Alkylation
14. Peroxidation
15. Epoxidation
16. Chlorination

*Priority pollutant

FIGURE V-8

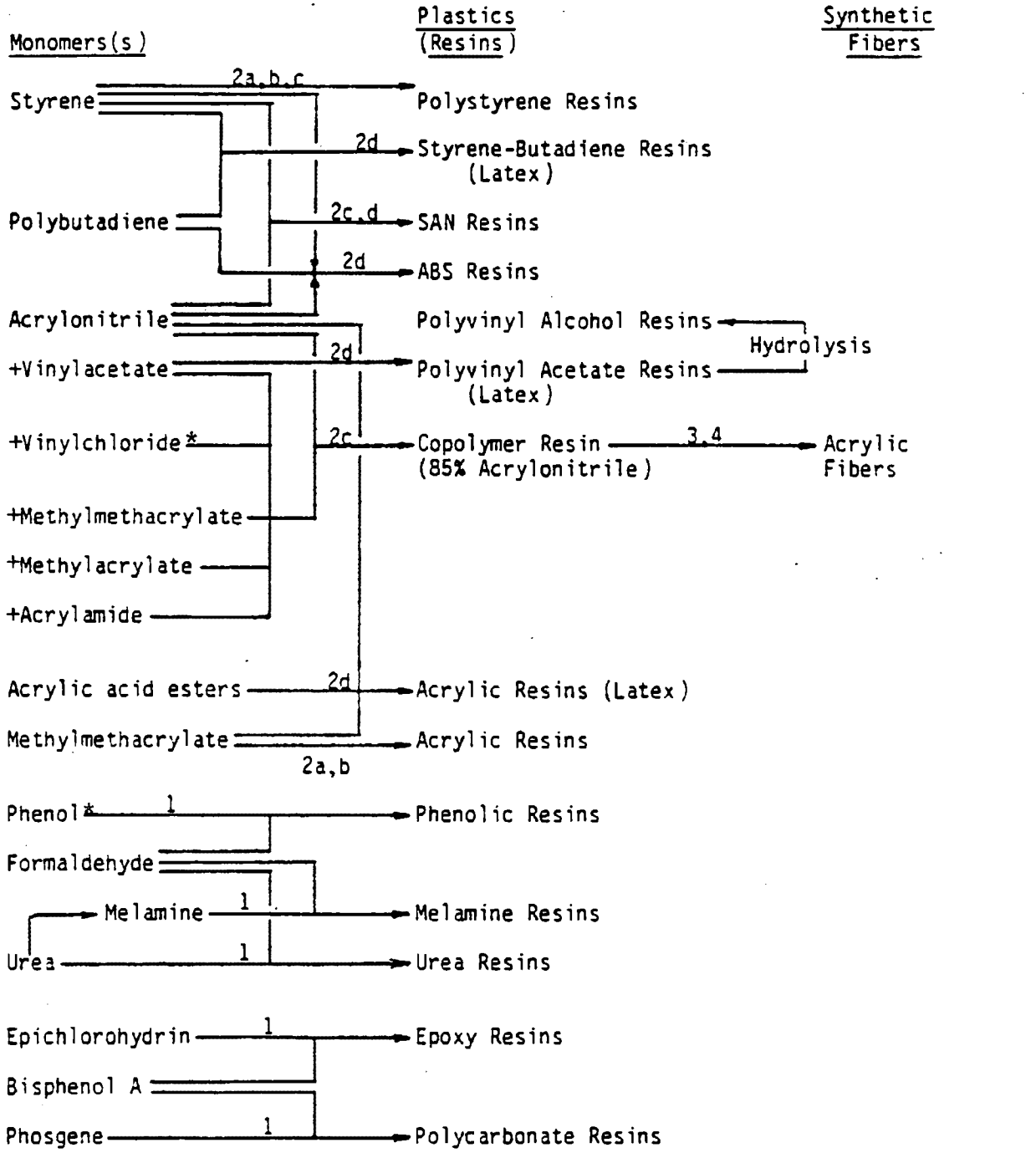

\+ Variable comonomer

* Priority Pollutant

Resin Polymerization Process

1. Condensation
2. Addition
   - a. Mass
   - b. Solution
   - c. Suspension
   - d. Emulsion

Fiber Spinning Process

3. Wet
4. Dry
5. Melt

FIGURE V-9

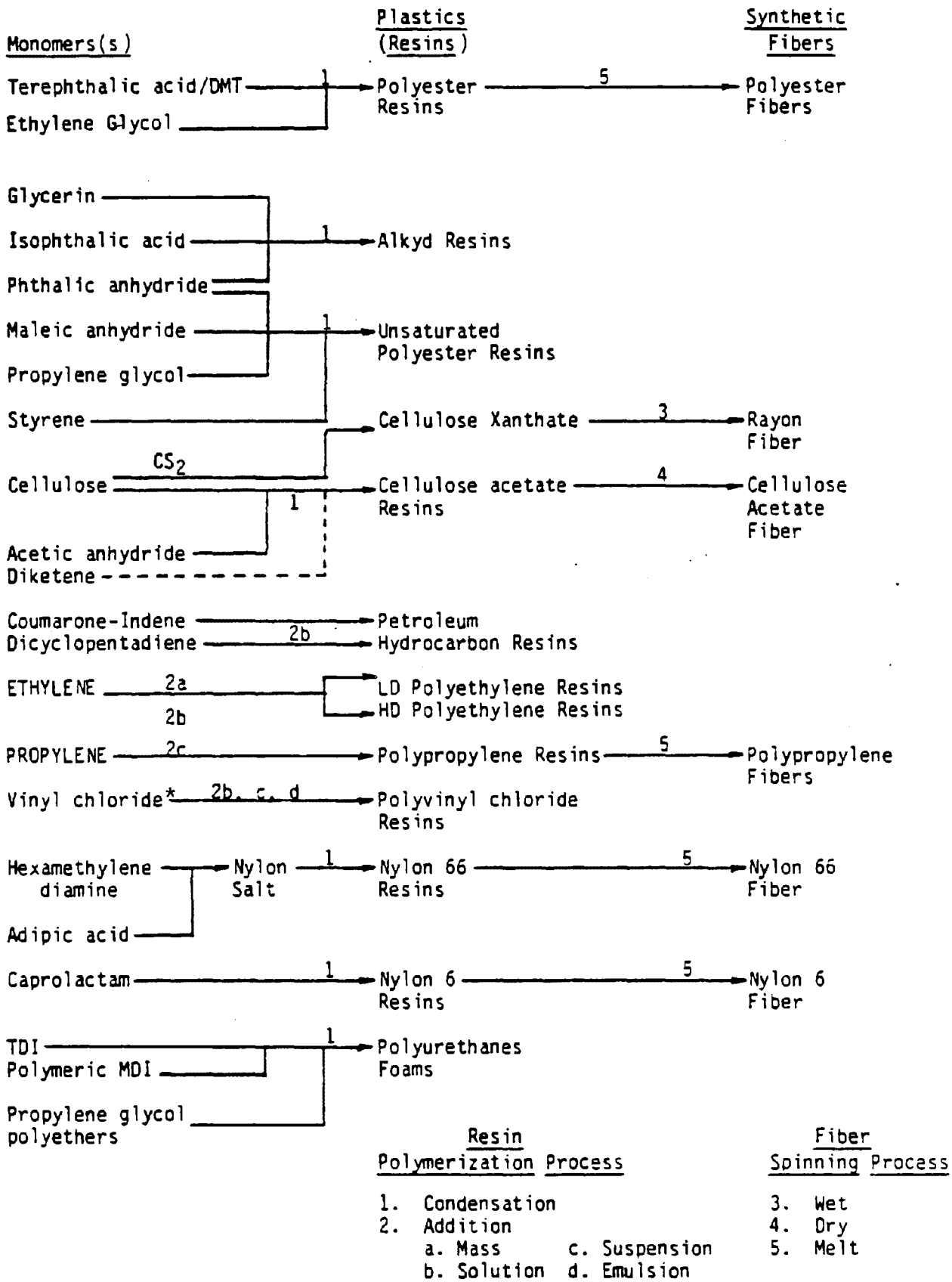

Resin Polymerization Process		Fiber Spinning Process
1. Condensation		3. Wet
2. Addition		4. Dry
a. Mass	c. Suspension	5. Melt
b. Solution	d. Emulsion	

* Priority pollutant

FIGURE V-10

Nitroaromatics, Nitrophenols, Benzidines, Phenols, Nitrosamines

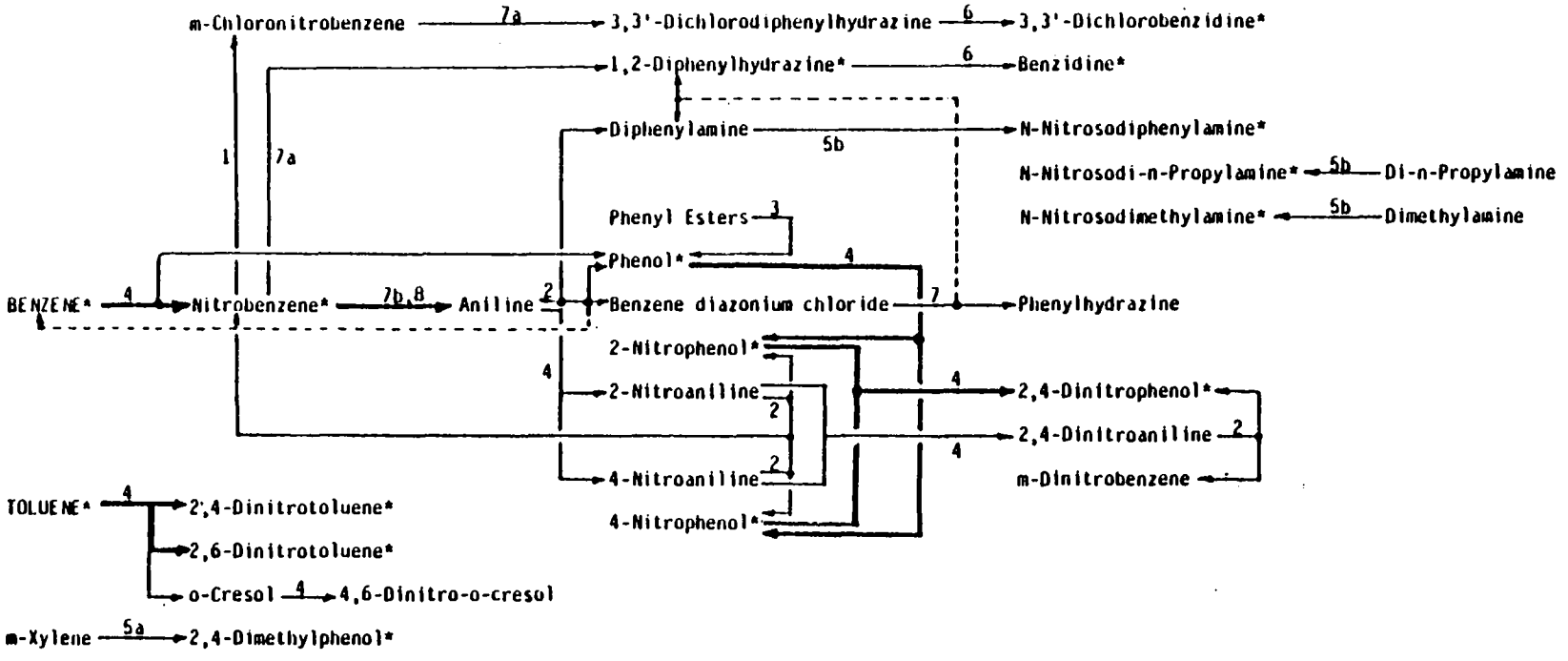

Generic Processes

1. Chlorination ($FeCl_3$ cat.)
2. Diazotization
3. Hydrolysis
4. Nitration
5. Oxidation (a. oxygen b. NOx)
6. Rearrangement (acid cat.)
7. Reduction (a. Zinc/caustic b. Iron/acid)
8. Hydrogenation

Notes

— Major synthetic route
— Principal coproduct
--- Minor coproduct
*Priority pollutant

FIGURE V-11

Chlorophenols, Chloroaromatics, Chloropolyaromatics, Haloaryl Ethers, PCB's

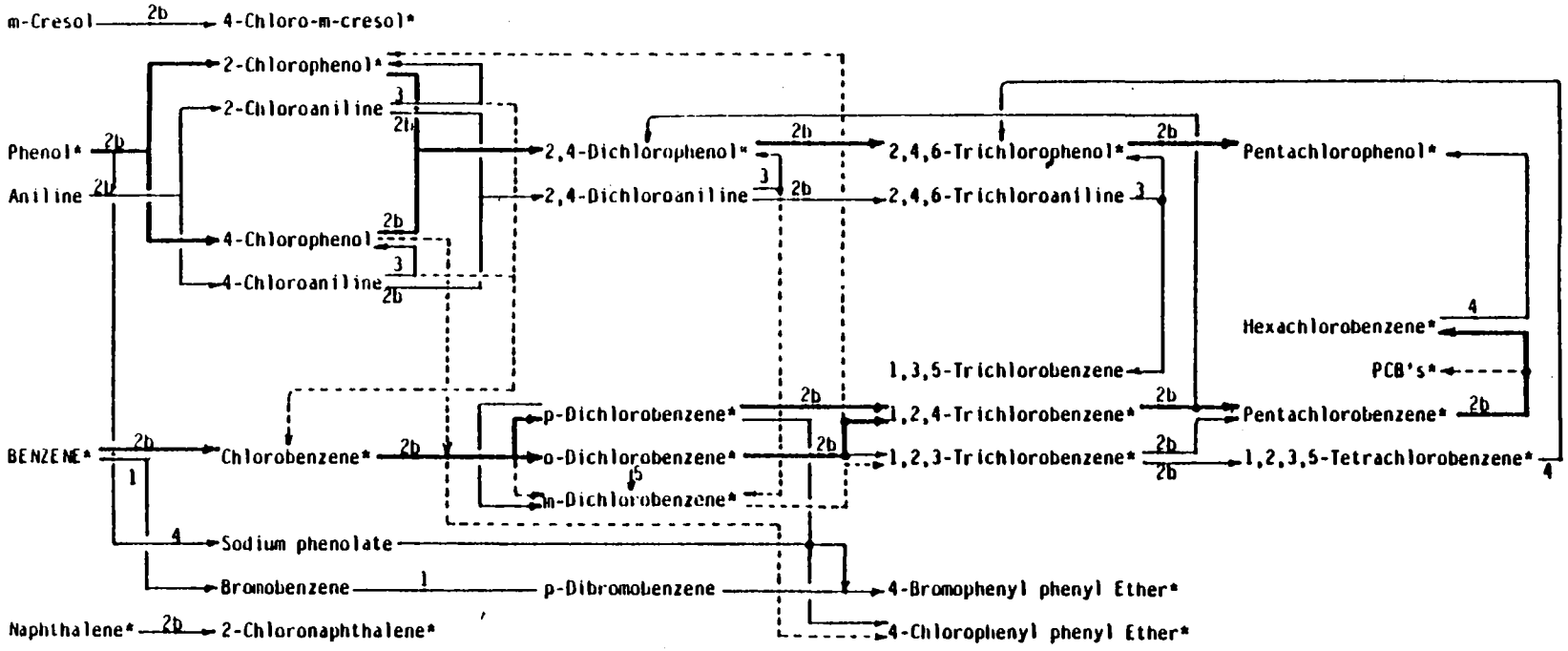

Generic Processes

1. Bromination
2. Chlorination (a. Thermal b. $FeCl_3$ cat.)
3. Diazotization
4. Hydrolysis (alkaline)
5. Rearrangement ($AlCl_3$ cat.)

Notes

━ Major synthetic route
— Principal coproduct
--- Minor coproduct
*Priority pollutant

FIGURE V-12

Chlorinated C2's, C4- Chloroalkyl Ethers

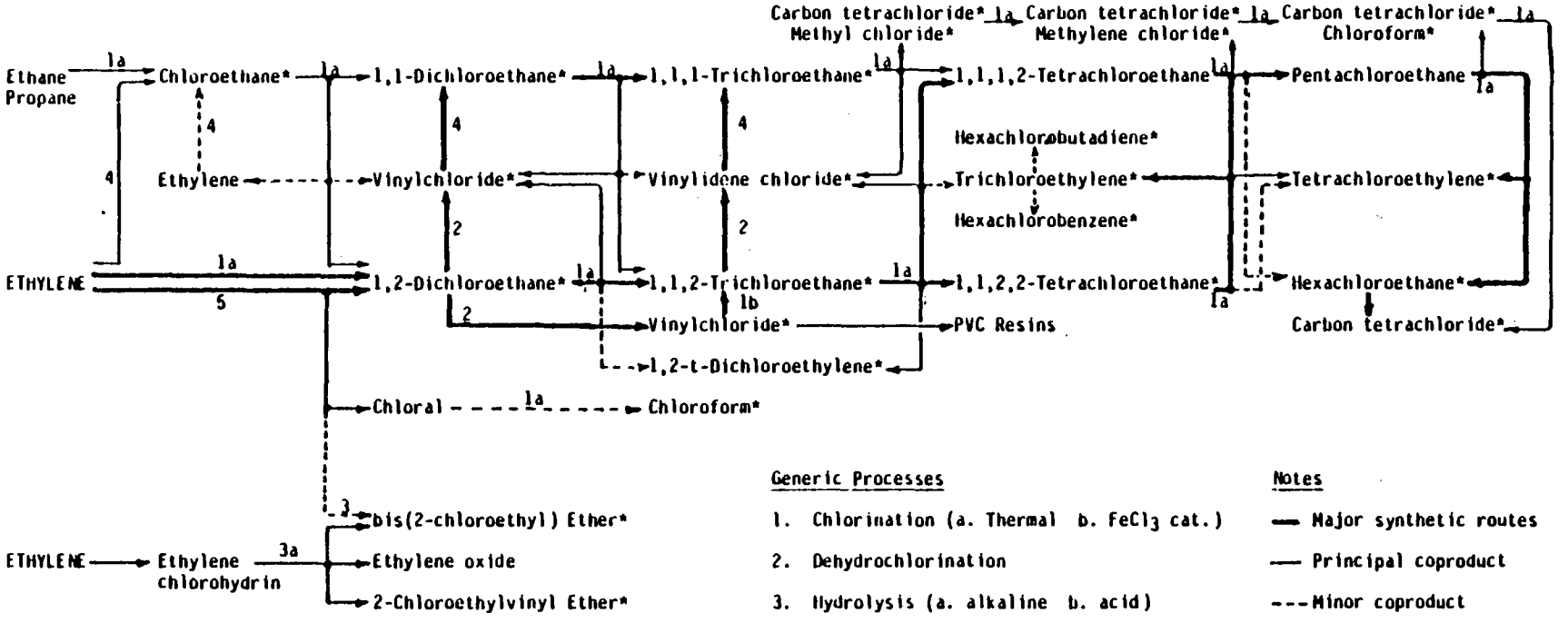

Generic Processes

1. Chlorination (a. Thermal b. $FeCl_3$ cat.)
2. Dehydrochlorination
3. Hydrolysis (a. alkaline b. acid)
4. Hydrochlorination ($FeCl_3$ cat.)
5. Oxychlorination

Notes

— Major synthetic routes
— Principal coproduct
--- Minor coproduct
*Priority pollutant

FIGURE V-13

Chlorinated C3's, Chloroalkyl Ethers, Acrolein, Acrylonitrile, Isophorone

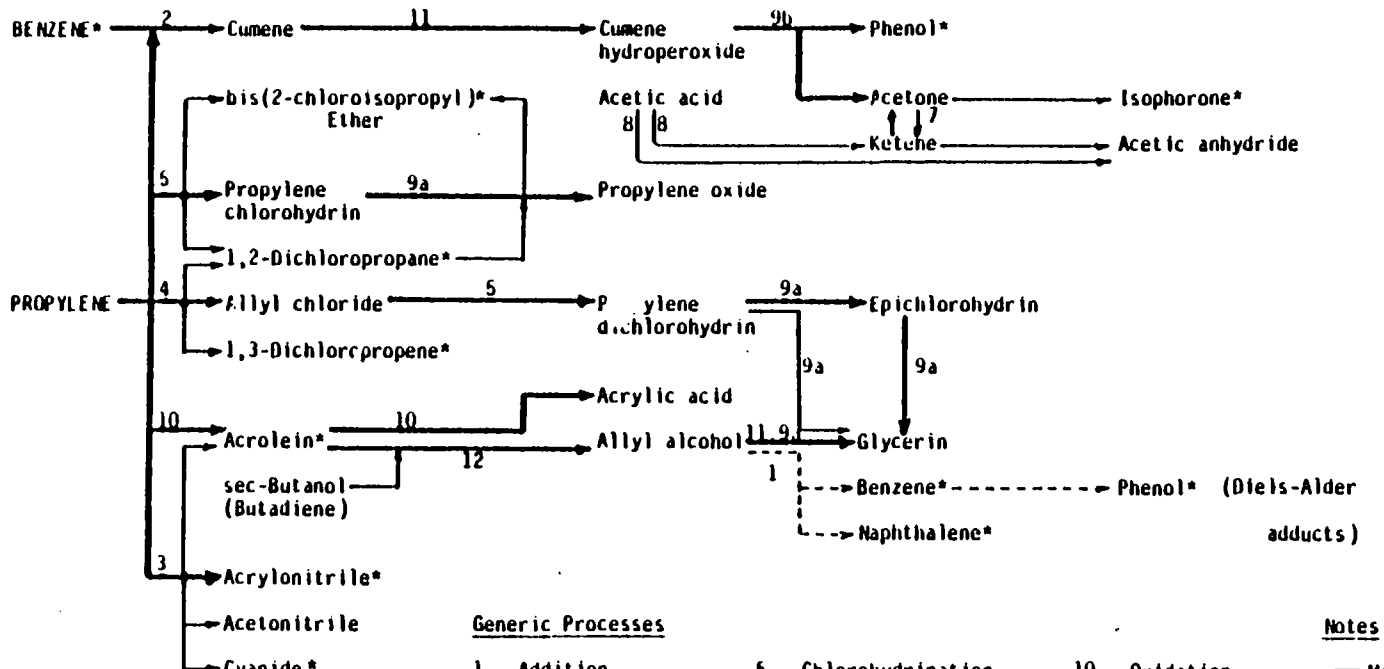

Generic Processes

1. Addition (1,4-Diels Alder)
2. Alkylation
3. Ammoxidation
4. Chlorination
5. Chlorohydrination
6. Condensation
7. Dehydrogenation
8. Dehydration
9. Hydrolysis (a. alkaline b. acid)
10. Oxidation
11. Peroxidation
12. Reduction (isoalkoxide)

Notes

- ━ Major synthetic route
- — Principal coproduct
- --- Minor coproduct
- *Priority pollutant

FIGURE V-14

Halogenated Methanes

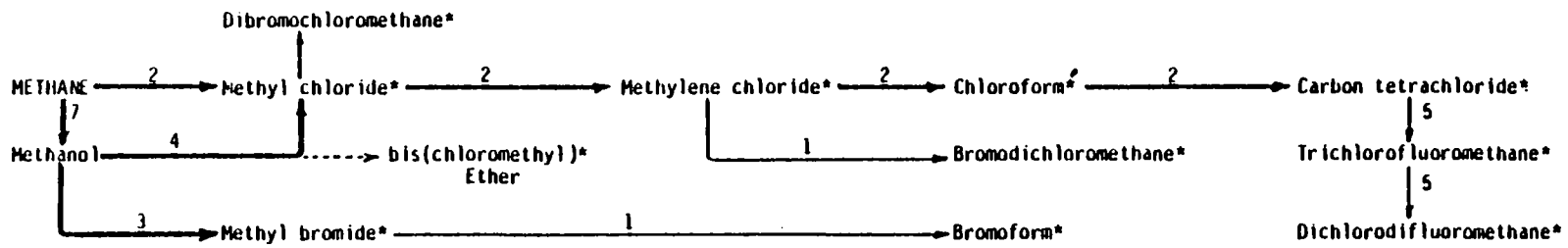

Generic Processes

1. Bromination
2. Chlorination (thermal)
3. Hydrobromination
4. Hydrochlorination ($ZnCl_2$)
5. Hydrofluorination
6. Hydrolysis (acid)
7. via synthesis gas (CO,H_2)

Notes

— Major synthetic routes

-- Minor coproduct

*Priority pollutant

3. Chlorinated C_2, C_4 and hydrocarbons; chloroalkyl ethers.

4. Chlorinated C_3, hydrocarbons, acrolein, acrylonitrile, isophorone and chloroalkyl ethers.

5. Halogenated methanes.

The generic processes associated with these synthesis routes are denoted by numbers individually keyed to each chart.

The precursor(s) for each of these classes is reasonably obvious from the generic group name. Classes 1 and 2 are, for the most part, substituted aromatic compounds, while Classes 3, 4 and 5 are derivatives of ethene, propene and methane, respectively. The common response of these precursors to the chemistry of a process has important implications, not only for the prediction of priority pollutants but for their regulation as well: that is, group members generally occur together.

It is significant to note that among the many product/processes of the industry, the collection of products and generic processes shown in Figures V-10 through V-14 are primarily responsible for the generation of priority pollutants. The critical precursor-generic process combinations associated with these products are summarized in TABLE V-13. While there may be critical combinations other than those considered here, Table V-13 contains certainly the most obvious and probably the most likely combinations to be encountered in the Organic Chemicals and Plastics/Synthetic Fibers industrial categories.

Product/Process Sources of Priority Pollutants

The product/processes that generate priority pollutants become obvious if the synthesis routes to the priority pollutants are, in effect, superimposed upon the synthesis routes employed by the industry in the manufacture of its major products. FIGURE V-15 represents a priority pollutant profile of the OCPSF Industries by superimposing Figures V-1 through V-9 and V-10 through V-14 upon on another so as to relate priority pollutants to feedstocks and products.

In any product/process, as typified by FIGURE V-16, if the feedstock (reactant), solvent, catalyst system, or product is a priority pollutant, then it is quite likely to be found in that product/process's wastewater effluent. Equally obvious are metallic priority pollutants, which are certainly not transformed to another metal (transmutation) by exposure to process conditions. Since side reactions are inevitable and characteristic of all chemical processes, priority pollutants may appear among the several co-products of the main reaction. Subtler sources of priority pollutants are the impurities in feedstocks and solvents.

Priority pollutant impurities may remain unaffected, or be transformed to other priority pollutants, by process conditions. Commercial grades of primary feedstocks and solvents commonly contain 0.5% or more of impurities. While 99.5% purity approaches laboratory reagent quality, 0.5% is nevertheless equal to 5000 ppm. Thus, it is not surprising that water coming into direct contact with these process streams will acquire up to 1 ppm (or more) of the impurities. It is not unusual to find priority pollutants representing raw material impurities or their derivatives reported in the 0.1-1 ppm

TABLE V-13

CRITICAL PRECURSOR/GENERIC PROCESS COMBINATIONS THAT GENERATE PRIORITY POLLUTANTS

FEEDSTOCK	GENERIC PROCESS				
	Oxidation	Chlorination	Nitration	Diazotization	Reduction
Benzene	Phenol	Chloroaromatics Chlorophenols	Nitroaromatics Nitrophenols		
Toluene	o,m-Cresol		Nitroaromatics		
Xylene	2,4-Dimethylphenol		2,4-Dimethylphenol		
Naphthalene		2-Chloronaphthalene			
Phenol		Chlorophenols	Nitrophenols		
Cresols		4-Chloro-m-cresol	4,6-Dinitro-o-cresol		
Chloroanilines				Chlorophenols Chloroaromatics Aromatics	
Nitroanilines				Nitrophenols Nitroaromatics Aromatics	
Nitrobenzene m-Chloronitrobenzene				N-Nitrosodiphenyl-amine* Benzidines**	Aniline* (Diphenylamine) 1,2-Diphenylhydrazines**
Ethene		Chlorinated C2's Chlorinated C4 Chloroaromatics			
Propene	Acrolein	Chlorinated C3's			
Methane		Chlorinated Methanes			

* Derived directly from aniline, or indirectly via phenylhydrazine, diphenylamine is one of three secondary amines that are precursors for Nitrosamines, when exposed to nitrites (as in diazotization) or NO_x.

** Diphenylhydrazines rearrange to Benzidines under acid conditions (as in diazotization).

FIGURE V-15

Priority Pollutant Profile of the Organic Chemical Industry

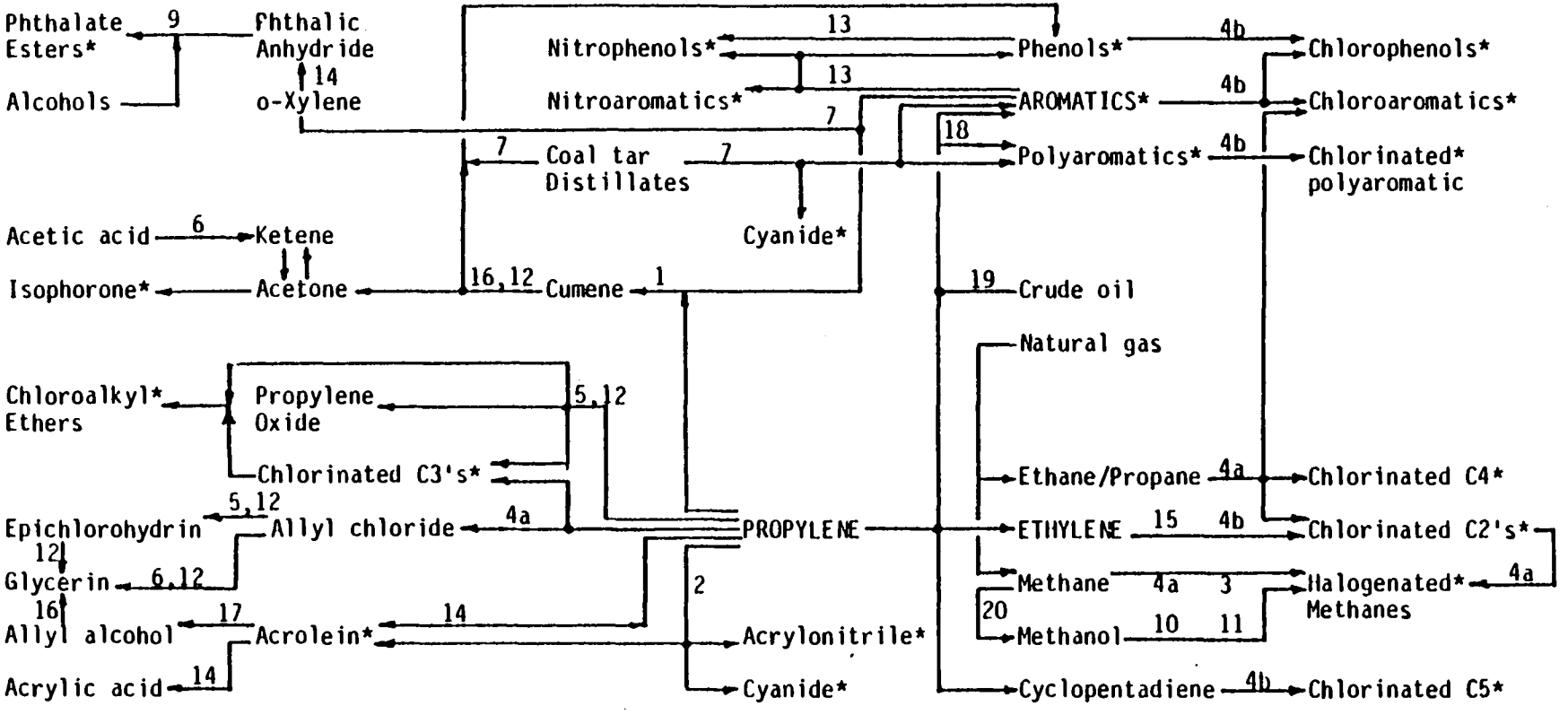

Generic Processes

1. Alkylation
2. Ammoxidation
3. Bromination (thermal)
4. Chlorination
   a. Thermal b. $FeCl_3$, $AlCl_3$)
5. Chlorohydrination
6. Dehydration
7. Distillation
8. Dehydrogenation
9. Esterification
10. Hydrobromination ($ZnBr_2$)
11. Hydrochlorination
    a. $FeCl_3$ b. $ZnCl_2$)
12. Hydrolysis
13. Nitration
14. Oxidation
15. Oxychlorination
16. Peroxidation
17. Reduction (alkoxide)
18. Solvent extraction
19. Steam pyrolysis
20. Via synthesis gas

*Priority Pollutants

FIGURE V-16

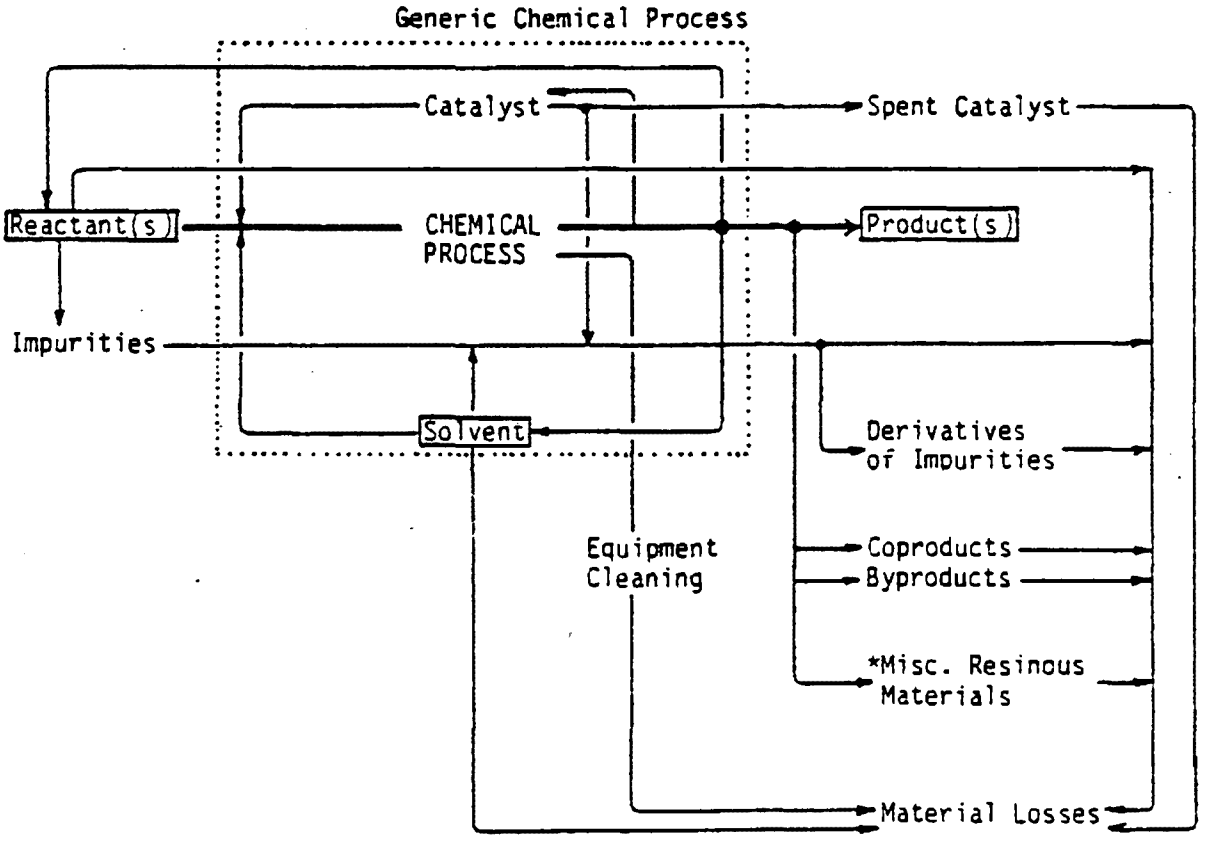

*Still bottoms, reactor coke, etc.

concentration range in analyses of product/process effluents. Sensitive instrumental methods currently employed in wastewater analysis have the capability of measuring priority pollutants at concentrations below 0.1 ppm. Specifications or assays of commercial chemicals at these trace levels are seldom available, or were not previously (before BAT) of any interest, since even 0.5% impurity in the feedstock and/or solvent would typically have negligible effect on process efficiency or product quality. Only in cases where impurities affect a process (e.g., poisoning of a catalyst) are contaminants specifically limited.

Priority Pollutants in Product/Process Effluents

During the verification stage of the BAT review, representative samples were taken from the effluents of 150 product/processes manufacturing organic chemicals and 26 product/processes manufacturing plastics/synthetic fibers. These 176 product/processes included virtually all of those shown on Figures V-1 through V-9. Analyses of these samples, averaged and summarized by individual product/process, showed the priority pollutants observed in these effluents to be preponderantly consistent with those that would have been predicted, based on the precursor (with impurities)-generic process combinations involved in each case.

Consistency between observation and prediction was most evident at concentrations >0.5 ppm. Below that level, an increasing number of extraneous priority pollutants were reported. Unrelated to the chemistry or feedstock of the process, and typically reported at concentrations <0.1 ppm, these anomalies could usually be attributed to one or more of the following sources:

1. Extraction solvent (methylene chloride), or its associated impurities.

2. Plasticizers (usually phthalates) from auto-sampler tubing, process water supply, pump seals, gaskets, etc.

3. Sample contamination during sampling or during sample preparation at the laboratory.

4. *In situ* generation in the wastewater collection system (sewer).

In the reconciliation of product/process effluent analytical data, it was expedient to initially sort out the extraneous from the legitimate priority pollutants. In most cases, only the latter can be related to the product/process. Less than half of the effluents of key product/processes manufacturing organic chemicals contained priority pollutants at concentrations >0.5 ppm. The generic groups of priority pollutants associated with these product/processes are summarized in TABLE V-14 and are consistent with those predicted in Table V-11. Many product/process effluents have little potential to contain >0.5 ppm of priority pollutants, because they do not involve critical precursor-generic process combinations.

Generic classes of priority pollutants reported at >0.5 ppm in the effluent of product/processes manufacturing plastics/synthetic fibers are summarized in TABLE V-15. Of the resins and fibers shown in Figures V-8 and V-9, only 18

TABLE V-14

ORGANIC CHEMICALS EFFLUENTS WITH SIGNIFICANT CONCENTRATIONS
(> 0.5 PPM) OF PRIORITY POLLUTANTS

PRODUCT	GENERIC PROCESS	FEEDSTOCK(S)	ASSOCIATED PRIORITY POLLUTANTS
Acetone	Alkylation, Peroxidation	Benzene, Propylene	Aromatics
Acetylene	Dehydrogenation	Methane	Aromatics, Polyaromatics
Acrolein	Oxidation	Propylene	Acrolein, Aromatics, Phenol
Acrylic acid	Oxidation	Propylene	Acrolein
Adiponitrile	Ammonolysis, Dehydration	Adipic acid	Acrylonitrile
	Hydrodimerization	Acrylonitrile, Hydrogen	Acrylonitrile
Alkyl (C13, C19) amines	Cyanation, Hydrogenation	C12-C18 alpha olefin, HCN	Cyanide
Alkyl (C8, C9) phenols	Alkylation	Phenol, C8-C9 Olefins	Phenol, Aromatics
Allyl alcohol	Reduction (by alkoxide)	Acrolein, sec-Butanol	Acrolein, Phenol, Aromatics, Polyaromatics
Aniline	Hydrogenation	Nitrobenzene	Aromatics
Benzene	Hydrodealkylation	Toluene	Aromatics, Polyaromatics
	BTX Extraction	Catalytic Reformate	Aromatics
	BTX Extraction	Coal tar light oil	Aromatics, Polyaromatics, Phenols, Cyanide
	BTX Extraction	Pyrolysis Gasoline	Aromatics, Polyaromatics
Benzyl chloride	Chlorination	Toluene	Aromatics
Bisphenol A	Condensation	Phenol, Acetone	Phenol, Aromatics
Butadiene	Extractive distillation	C4 Pyrolysates	Acrylonitrile (acetonitrile solvent),
Butenes			Aromatics, Polyaromatics
Butylbenzyl phthalate	Esterification	n-Butanol, Benzyl chloride	Phthalates
		Phthalic anhydride	
Caprolactam	Oxidation, Oximation	Cyclohexane	Aromatics
	Dehydrogenation, Oximation	Phenol	Aromatics, Phenol
Carbon tetrachloride	Chlorination	Methane	Chloromethanes, Chlorinated C2's
	Chlorination	Ethylene dichloride	Chloromethanes, Chlorinated C2's
Chlorobenzenes	Chlorination	Benzene	Chloroaromatics, Aromatics
Chloroform	Chlorination	Methane, Methyl chloride	Chloromethanes, Chlorinated C2's
m-Chloronitrobenzene	Chlorination	Nitrobenzene	Aromatics, Nitroaromatics, Chloroaromatics
Creosote	Distillation	Coal tar light oil	Phenols, Aromatics, Polyaromatics
Cumene	Alkylation	Benzene	Aromatics
Cyclohexanol/-one	Oxidation	Cyclohexane	Phenol, Aromatics
1,2-Dichloroethane	Oxychlorination	Ethylene, HCl	Chlorinated C2's
Dicyclopentadiene	Extraction, Dimerization	C5 Pyrolysate	Aromatics, Polyaromatics
Diethylphthalate	Esterification	Ethanol, Phthalic anhydride	Phthalates
Diketene	Dehydration	Acetic acid	Isophorone
Dimethyl terephthalate	Esterification	Methanol, TPA	Phthalates, Phenol
Dinitrotoluenes	Nitration	Toluene	Nitroaromatics, Aromatics, Nitrophenols
Diphenylisodecyl phosphate ester	Esterification	Phenol, Isodecanol	Phenol, Chlorophenols
		$POCl_3$	Aromatics
Epichlorohydrin	Chlorohydrination	Allyl chloride	Chlorinated C3's
Ethoxylates-Alkylphenol	Ethoxylation	Alkylphenol, Ethylene oxide	Phenol, Aromatics
Ethylbenzene	Alkylation	Benzene, Ethylene	Aromatics, Polyaromatics, Phenol
	Extraction from BTX	BTX Extract	Aromatics, Polyaromatics
			Acrylonitrile (acetonitrile solvent)
Ethylene	Steam Pyrolysis	LPG, Naphtha, or Gas oil	Aromatics, Polyaromatics, Phenol
Ethylene amines	Ammonation	1,2-Dichloroethane, NH_3	Chlorinated C2's
Ethylene diamine	Ammonation	1,2-Dichloroethane, NH_3	Chlorinated C2's
Ethylene oxide	Oxidation	Ethylene	1,2-Dichloroethane (CO_2 inhibitor)
	Chlorohydrination	Ethylene	Chlorinated C2's, Chloroalkyl ethers

TABLE V-14 (concluded)

PRODUCT	GENERIC PROCESS	FEEDSTOCK(S)	ASSOCIATED PRIORITY POLLUTANTS
2-Ethylhexyl phthalate	Esterification	2-Ethylhexanol Phthalic anhydride	Phthalates
Glycerine	Hydrolysis	Epichlorohydrin	Chlorinated C3's
Hexamethylene diamine	Hydrogenation	Adiponitrile	Acrylonitrile
Isobutylene	Extraction	C4 Pyrolysate	Aromatics
Isoprene	Extractive distillation	C5 Pyrolysate	Aromatics, Polyaromatics Acrylonitrile (Acetonitrile solvent)
Maleic anhydride	Oxidation	Benzene	Aromatics
Methacrylic acid	Cyanohydrination	Acetone	Cyanide
Methyl chloride	Chlorination	Methane	Chloromethanes, Chlorinated C2's
	Hydrochlorination	Methanol	Chloromethanes
Methylene chloride	Chlorination	Methane Methyl chloride	Cloromethanes, Chlorinated C2's
Methylethyl Ketone	Reduction (alkoxide)	Acrolein, sec-Butanol	Acrolein, Aromatics, Polyaromatics, Phenol
a-Methyl styrene	Peroxidation	Cumene	Aromatics, Phenol
Naphthalene	Distillation	Coal tar distillates	Aromatics, Polyaromatics, Phenols, Cyanide
	Distillation	Pyrolysis Gasoline	Aromatics, Polyaromatics
Nitrobenzene	Nitration	Benzene	Aromatics, Nitroaromatics Nitrophenols
Phenol	Peroxidation	Cumene	Aromatics, Phenols
Phthalic anhydride	Oxidation	Napththalene	Polyaromatics
	Oxidation	o-Xylene	Aromatics
Polymeric methylene dianiline	Condensation	Aniline, Formaldehyde	Nitroaromatics
Polymeric methylene diphenyl diisocyanate	Phosgenation	Polymeric methylene dianiline, Phosgene	Chloroaromatics (phosgenation solvent)
Propylene	Steam Pyrolysis	LPG, Naphtha, Gas oil	Aromatics, Polyaromatics, Phenols
Propylene oxide	Chlorohydrination	Propylene	Chlorinated C3's, Chloroalkyl ethers
Styrene	Dehydrogenation	Ethylbenzene	Aromatics, Phenol
Tetrachloroethylene	Chlorination	1,2-Dichloroethane RCl heavies	Chloromethanes, Chlorinated C2's Chlorinated C3's
Tetrachlorophthalic anhydride	Chlorination	Phthalic anhydride	Chloroaromatics
Toluene	BTX Extraction	Catalytic reformate	Aromatics
	BTX Extraction	Coal tar light oil	Aromatics, Polyaromatics, Phenols, Cyanide
	BTX Extraction	Pyrolysis gasoline	Aromatics
Tolylenediisocyanate	Phosgenation	Tolylenediamine	Chloroaromatics
1,2,4-Trichlorobenzene	Chlorination	1,4-Dichlorobenzene	Chloroaromatics
Trichloroethylene	Chlorination	1,2-Dichloroethane RCl heavies	Chlorinated C2's, Chloromethanes
Vinyl acetate	Acetylation	Ethylene, Acetic acid	Acrolein
Vinyl chloride	Dehydrochlorination	1,2-Dichloroethane	Chlorinated C2's, Chloromethanes
Vinylidene chloride	Dehydrochlorination	1,1,2-Trichloroethane	Chlorinated C2's, Cloromethanes
Xylenes (mixed)	BTX Extraction	Pyrolysis gasoline	Aromatics
	BTX Extraction	Catalytic reformate	Aromatics
	BTX Extraction	Coal tar distillates	Phenols, Aromatics, Polyaromatics, Cyanide
m,p-Xylenes	Distillation	BTX extract	Aromatics, Polyaromatics
o-Xylene	Distillation	BTX extract	Aromatics, Polyaromatics

TABLE V-15

PLASTICS/SYNTHETIC FIBERS EFFLUENTS WITH SIGNIFICANT CONCENTRATIONS (>0:5 ppm) OF PRIORITY POLLUTANTS

PRODUCT	MONOMER(S)	ASSOCIATED PRIORITY POLLUTANTS
ABS resins	Acrylonitrile Styrene Polybutadiene	Acrylonitrile Aromatics
Acrylic fibers	Acrylonitrile Comonomer (variable): Vinyl chloride	Acrylonitrile Chlorinated C2's
Acrylic resins (Latex)	Acrylonitrile Acrylate Ester Methylmethacrylate	Acrylonitrile Acrolein
Acrylic resins	Methylmethacrylate	Cyanide
Alkyd resins	Glycerin Isophthalic acid Phthalic anhydride	Acrolein Aromatics Polyaromatics
Cellulose acetate	Diketene (acetylating agent)	Isophorone
Epoxy resins	Bisphenol A Epichlorohydrin	Phenol Chlorinated C3's Aromatics
Petroleum hydrocarbon resins	Dicyclopentadiene	Aromatics
Phenolic resins	Phenol Formaldehyde	Phenol Aromatics
Polycarbonates	Bisphenol A Phosgene	(Not investigated) Predicted: Phenol Chloroaromatics Halomethanes
Polyester	Terephthalic acid/ Dimethylterephalate Ethylene glycol	Phenol Aromatics

TABLE V-15 (concluded)

PRODUCT	MONOMER(S)	ASSOCIATED PRIORITY POLLUTANTS
HD Polyethylene resin	Ethylene	Aromatics
Polypropylene resin	Propylene	Aromatics
Polystyrene	Stryrene	Aromatics
Polyvinyl chloride resin	Vinyl chloride	Chlorinated C2's
SAN resin	Styrene Acrylonitrile	Aromatics Acrylonitrile
Styrene - Butadiene resin (Latex)	Styrene (>50%) Polybutadiene	Aromatics
Unsaturated polyester	Maleic anhydride Phthalic anhydride Propylene glycol (Styrene-added later)	Phenol Aromatics

appear in Table V-15. This is attributable to the fact that plastics and synthetic fibers are polymeric products manufactured from monomeric precursors. The priority pollutants found in polymeric product/process effluents are usually restricted to the monomer(s) and its impurities or derivatives. Since all monomers or accompanying impurities are not priority pollutants, some plastics/synthetic fibers effluents are essentially free of priority pollutants.

In comparison with effluents from product/processes manufacturing organic chemicals, effluents from polymeric product/processes generally contained fewer priority pollutants at lower concentrations. The polymeric plastics and synthetic fibers considered here have virtually no water solubility. Furthermore, the process is designed to drive the polymerization as far to completion as is practical and to recover unreacted monomer (often with its impurities) for recycle to the process. Thus, the use of only a few priority pollutant-related monomers, the limited solubility of polymeric products, and monomer recovery results in the reduction of the number of priority pollutants and their relative loading in plastics/synthetic fibers effluents.

TABLE V-16 lists priority pollutants detected in OCPSF process wastewaters by generic process. Priority pollutants are generically grouped and the groups are arrayed horizontally. Priority pollutants reported from verification analyses of product/process effluents are noted in four concentration ranges, reading across from each precursor. This arrangement makes it more apparent, particularly at higher concentration ranges, that reported priority pollutants tend to aggregate within those groups that would be expected from the corresponding precursor-generic process combination.

In contrast with organic priority pollutants that are co-produced from other organic chemicals, metallic priority pollutants cannot be formed from other metals. Except for a possible change of oxidation state, metals remain immutable throughout the generic process. Thus, to anticipate metallic priority pollutants, the metals that were introduced into a generic process must be known.

Metallic priority pollutants, individually and in combinations, are most often related to a generic process via the catalyst system. The metals composing catalyst systems that are commonly employed with particular precursor-generic process combinations to manufacture important petrochemical products have been generally characterized in the technical literature (especially in patents). An obvious way to offer clues for predicting metallic priority pollutants was to expand the generic process descriptors in the listing of Table V-16 to include this information.

Copper, chromium and zinc were the metallic priority pollutants most frequently reported in the higher concentration ranges for all product/process effluents. Copper and chromium are used in many catalyst systems. Another significant source of chromium, as well as zinc, is the "blowdown" that is periodically wasted from an in-plant production area's recycled non-contact cooling water. These metals find application in non-contract cooling waters as corrosion inhibitors. In some wastewater collection systems, it is possible for the blowdown to become mixed with product/process effluent before

TABLE V-16

PRIORITY POLLUTANTS IN EFFLUENTS OF PRECURSOR-GENERIC PROCESS COMBINATIONS

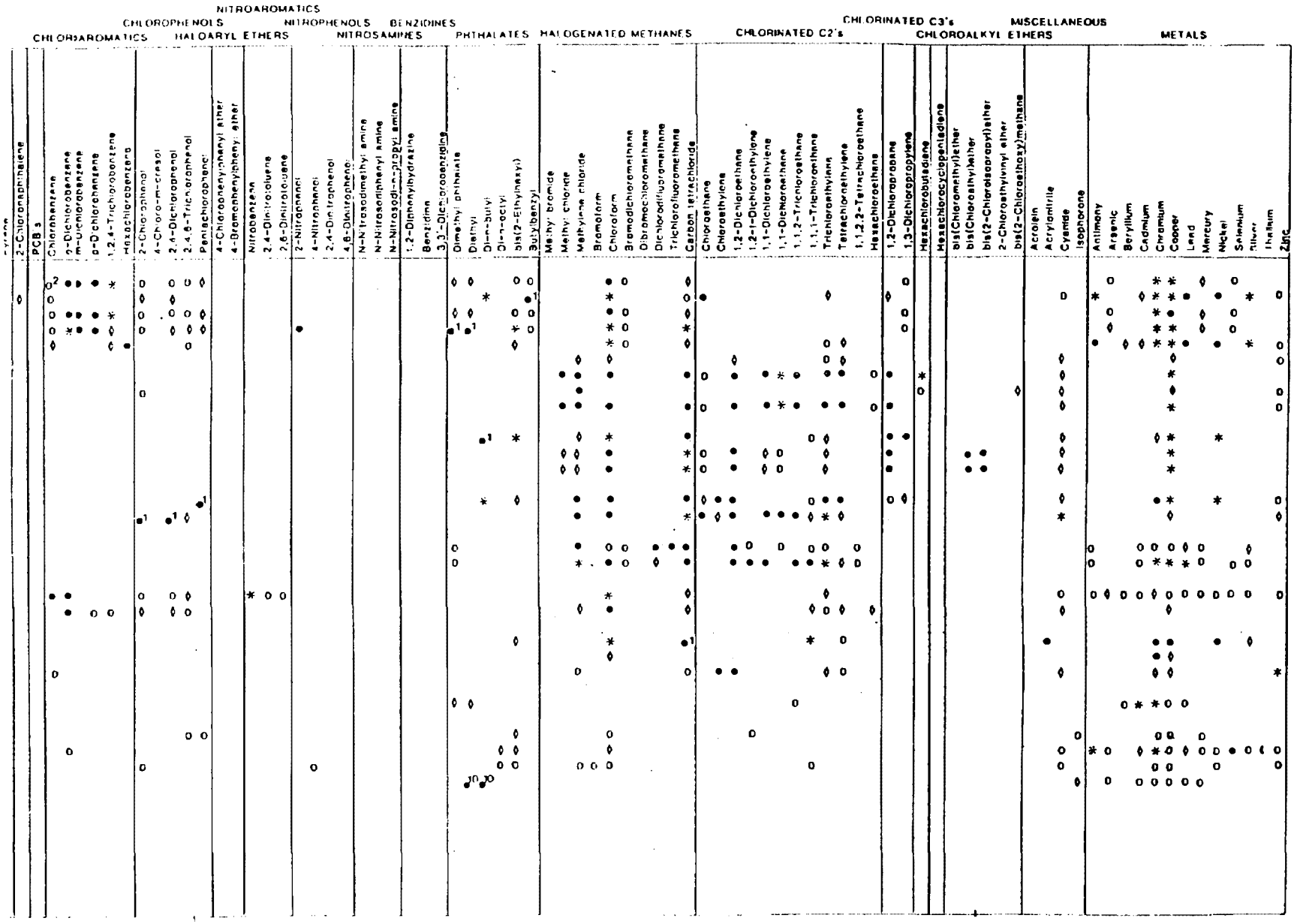

this analysis
lat analyse

9 2011-01 has similar analysis
10 Acetic acid recovered from oxidation of o-xylene

KEY
● = >0.5 ppm
✱ = 0.1 - 0.5 ppm
◊ = 0.01 - 0.1 ppm
O = < 0.1 ppm, or analysis failed to detect

PRIORITY POLLUTANT GROUPS / PRECURSOR (FEEDSTOCK)	AROMATICS: Benzene	Toluene	Ethylbenzene	PHENOLS: Phenol	2,4-Dimethylphenol	POLYAROMATICS: Naphthalene	Acenaphthene	Acenaphthylene	Anthracene	Benzo(a)anthracene	Benzo(a)pyrene	3,4-Benzofluoranthene	Benzo(k)fluoranthene	Benzo(ghi)perylene	Chrysene	Dibenzo(a,h)anthracene	Fluorene	Fluoranthene	Ideno(1,2,3-cd)pyrene	Phenanthrene	Pyrene	2-Chloronaphthalene	PCB's	CHLOR: Chlorobenzene	o-Dichlorobenzene
DIRECT CHLORINATION																									
Benzene [3]	*	o	o	o	o																			o[2]	●
Toluene	*	●	o	◊					o											o		◊		o	
1,4-Dichlorobenzene	*	o	o	◊	o																			o	●
Nitrobenzene	●	o	o	o	o																			o	*
Phthalic anhydride	o	◊																						◊	
Ethylene	◊	◊	o	o																					
Ethylene dichloride [4]	*			o																					
Ethylene dichloride [5]	*	*	o	◊		*			o								*			o					
Methane [6]	*			o																					
CHLOROHYDRINATION																									
Allyl chloride	◊			o		◊		o																	
Ethylene [7]	o																								
Propylene [7]	o																								
DEHYDROCHLORINATION																									
Ethylene dichloride																									
1,1,2-Trichloroethane	◊	●[1]	◊	●[1]																					
HYDROFLUORINATION																									
Carbon tetrachloride																									
1,1,1-Trichloroethane																									
PHOSGENATION																									
Poly MDA [8]	◊	o																						●	●
2,4-Tolylenediamine	◊	◊		◊		●																			●
AMMONATION																									
Adipic acid					●																				
Ethanol																									
Ethylene dichloride [9]	o	*	o																					o	
ACETYLATION																									
Cellulose/Acetic anhyd.				o																					
DEHYDRATION																									
Acetic acid	*	◊	o	o																					
Cumene hydroperoxide	●	*		*		◊																			o
t-Butanol	o	o	o	●[1]	o	o			o	o					o		o			o	o				
Acetic acid	●[10]			◊																					

NOTES:
1. Extraneous to product process.
2. False negative.
3. 1216-01, 1220-01 have similar analyses.
4. 0810-04 has similar analysis.
5. Chlorinated C2's are missing from this analysi
6. 0930-02, 2620-02, 2550-03 have similar analys
7. Corzon wastewater effluent.
8. 3355-01 has similar analysis.

TABLE V-16(Continued)

RIORITY POLLUTANTS IN EFFLUENTS OF PRECURSOR-GENERIC PROCESS COMBINATIONS

CHLOROAROMATICS								CHLOROPHENOLS					HALOARYL ETHERS		NITROAROMATICS			NITROPHENOLS				NITROSAMINES			BENZIDINES			PHTHALATES						HALOGENATED METHANES										CHLORINATED C2's												CHLORINATED C3's				CHLOROALKYL ETHERS					MISCELLANEOUS				METALS												
2-Chloronaphthalene	PCB's	Chlorobenzene	o-Dichlorobenzene	m-Dichlorobenzene	p-Dichlorobenzene	1,2,4-Trichlorobenzene	Hexachlorobenzene	2-Chlorophenol	4-Chloro-m-cresol	2,4-Dichlorophenol	2,4,6-Trichlorophenol	Pentachlorophenol	4-Chlorophenylphenyl ether	4-Bromophenylphenyl ether	Nitrobenzene	2,4-Dinitrotoluene	2,6-Dinitrotoluene	2-Nitrophenol	4-Nitrophenol	2,4-Dinitrophenol	4,6-Dinitrophenol	N-Nitrosodimethyl amine	N-Nitrosodiphenyl amine	N-Nitrosodi-n-propyl amine	1,2-Diphenylhydrazine	Benzidine	3,3'-Dichlorobenzidine	Dimethyl phthalate	Diethyl	Di-n-butyl	Di-n-octyl	bis(2-Ethylhexyl)	Butylbenzyl	Methyl bromide	Methyl chloride	Methylene chloride	Bromoform	Chloroform	Bromodichloromethane	Dibromochloromethane	Dichlorodifluoromethane	Trichlorofluoromethane	Carbon tetrachloride	Chloroethane	Chloroethylene	1,2-Dichloroethane	1,2-t-Dichloroethylene	1,1-Dichloroethylene	1,1-Dichloroethane	1,1,2-Trichloroethane	1,1,1-Trichloroethane	Trichloroethylene	Tetrachloroethylene	1,1,2,2-Tetrachloroethane	Hexachloroethane	1,2-Dichloropropane	1,3-Dichloropropylene	Hexachlorobutadiene	Hexachlorocyclopentadiene	bis(Chloromethyl)ether	bis(Chloroethyl)ether	bis(2-Chloroisopropyl)ether	2-Chloroethylvinyl ether	bis(2-Chloroethoxy)methane	Acrolein	Acrylonitrile	Cyanide	Isophorone	Antimony	Arsenic	Beryllium	Cadmium	Chromium	Copper	Lead	Mercury	Nickel	Selenium	Silver	Thallium	Zinc
		o						o																								o				o		o								o																				o						●	◊	o						◊
								◊							◊													o				o				o		*	o				o	o				o	o	o	o			o		o										●[1]	◊			o		o	●	◊	o	o	o	o		o	◊
																																◊				o														◊																						o	◊		o			o	
																																◊				o														◊																						o	◊		o			o	
			◊																o											o	o				o	o	◊													o																	o						●	o			o				●
																															o				●[1]			o																													●			o			*	◊		◊		◊			
		◊	◊									o																			◊				o	◊	◊	◊							o					o															*								◊	o	o	◊				
			◊																												◊				o			o							o			◊																	●[12]	o							●	◊	o	o				o
			◊																												◊				o			◊																											●[12]								◊	◊	o	◊				
			◊																												◊				o			◊																											●[1]								◊	◊	o	o				
										o	o							◊											o	◊		*			◊	◊		o	o			o	o			o		o	o	o				o		o	o																o	*	*	o		o		o	
			◊							o																					◊				o			◊																											●[12]								◊	◊	o	◊				
			o								o							◊											o	o		◊			●[1]	o		o	o			o	o			o		o	o		o			o		o	o									◊						o	*	*	o		o		o	
			◊																												◊				o			◊																											●[12]								◊	◊	o	◊				
		◊						◊		◊	◊														*											*		o						◊		o		*																				◊								*								●
																																o																																			◊						o	o			o					o
																																o				o		o																													o						◊	o								◊
		o	◊																												◊				◊		o		◊		●[1]		◊				o	◊																	●[1]	o							◊	◊	o	◊				o
		o																*					o					●[1]																																											*	◊		o					
												o						◊	o												o	o				o		o				o	o			o	o	o			o	o		o														o			o			*	◊		o	o	◊			
																																◊				o				◊																										●[12]								◊	◊	o	◊				
																												●[1]	●[1]																																						*	o		o	o	o	o	o	o	o			
								●[10]																																																												o	o	o	o	◊	*	o	o[11]	o	o	o	o	o
															●	●	●	*	◊	*																		o					o									o															●[1]		*	◊	o	o	*	◊	◊	o	*	◊	o	o	o
												o			●	●		●	●	●	●																	o					o									o					o										*		●	●	◊	◊	*	o	◊	o	●	◊	o	◊	o
		o						◊		o	◊																																																																							
																		|●|o|																																																														
																		◊		o																																																														

ns
ar analyses.
ar analyses

9. 1442-01 has similar analysis
10. Chlorine source is probably the 50% caustic coreactant
11. Above verification selection criterion.
12. Possible contaminant from acetonitrile extractive dist solvent

Preceding page blank

KEY: ● = >0.5 ppm
* = 0.1 - 0.5 ppm
◊ = .01 - 0.1 ppm
o = <.01 ppm. or analysis failed to detect

PRIORITY POLLUTANT GROUPS / PRECURSOR (FEEDSTOCK)	AROMATICS			PHENOLS		POLYAROMATICS															CHLORO/			
	Benzene	Toluene	Ethylbenzene	Phenol	2,4-Dimethylphenol	Naphthalene	Acenaphthene	Acenaphthylene	Anthracene	Benzo(a)anthracene	Benzo(a)pyrene	3,4-Benzofluoranthene	Benzo(k)fluoranthene	Benzo(ghi)perylene	Chrysene	Dibenzo(a,h)anthracene	Fluorene	Fluoranthene	Ideno(1,2,3-cd)pyrene	Phenanthrene	Pyrene	2-Chloronaphthalene	PCB's	Chlorobenzene	o-Dichlorobenzene	m-Dichlorobenzene
CRACKING																										
LPG[2]	●	●	●	●		●	◊	●	✱	o	o						●	◊		●	✱			o		
Naphtha/Gas oil[3]	●	●	●	●	●	●	●	o	●	✱	◊		◊	o	◊		✱	●	o	●	✱					
Naphtha/LPG[4]	●	●		●	o			◊	◊								◊	o		◊	◊					
Naphtha/LPG	●	●		●	o			◊	◊								◊	o		◊	◊					
EXTRACTION/DISTILLATION																										
Catalytic reformate[5]	●	●	●	◊	o	✱			o	o					o		o			o	o				◊	
Coal tar light oil[6]	●	●		●	●		●	●	●	●					●			●		●	●					
Pyrolysis gasoline[7]	●	●	●	◊		●			✱	✱	◊		o				●	◊	◊	●	✱			◊	◊	
C4 Pyrolyzates	●	●	●	o		●	o	o	●	✱	o	◊	◊	◊			●	◊	◊	●	✱				◊	
C5 Pyrolyzates	●	●	●			●			●	✱	◊	◊	◊	◊			●	◊	◊	●	●				◊	
Pyrolysis gasoline	●	●	●			●			●	✱	◊	◊	◊	◊			●	◊	◊	●	●				◊	
C4 Pyrolyzates	●	●	◊	o	o	✱	o	o	o								o	o		o	o					
BTX Extract	●	●	●			●			●	✱	◊	◊	◊	◊			●	◊	◊	●	●				◊	
C5 Pyrolyzates	●	●	◊	◊	o	●	o	o	◊	◊	o	o	o	o			●	o	o	✱	◊				o	
C4 Pyrolyzates[8]	●	●	●			●			●	✱	◊	◊	◊	◊			●	◊	◊	●	●				◊	
ALKYLATION																										
Benzene/Ethylene	●	●	●	●		●			o	o	✱				o		◊			o	◊			◊		
Benzene/Propylene[9]	●																									
Phenol/Octene/Nonene		●		●																						
HYDRODEALKYLATION																										
Toluene/Xylene	●	●	●	◊		●	◊	o	●	✱	o	◊	◊	◊			●		◊	●	✱			o	◊	
OXIMATION																										
Phenol/Cyclohexanone	o	●		●																				o		
Cyclohexane/Cyclohexanone	●	●	o	●																						
DIMERIZATION																										
Cyclopentadiene	●	●	●			●			●	✱	◊	◊	◊	◊			●	◊	◊	●	●					
Ketene	●			◊																						
CARBOXYLATION																										
Phenol	o	o		●																						
NITRATION																										
Toluene	●	●																								
Benzene	●			◊																						
DIAZOTIZATION																										
2,4,6-Trichloroaniline																								o		
Aniline				●																						
4-Nitroaniline																										
2-Nitroaniline																										

NOTES:
1. Extraneous to product process.
2. 3090-02 has similar analysis.
3. 3090-05 has similar analysis.
4. 3090-11 has similar analysis.
5. 3348-01, 3541-03 have similar analyses.
6. 1007-01, 2881-01, 2701-01 have similar analyses
7. 3348-07, 3541-01, 3541-08 have similar analyses
8. 3560-01 has similar analysis

TABLE V-16 (Continued)

PRIORITY POLLUTANTS IN EFFLUENTS OF PRECURSOR-GENERIC PROCESS COMBINATIONS

	CHLOROAROMATICS								CHLOROPHENOLS				NITROAROMATICS				NITROPHENOLS				NITROSAMINES				BENZIDINES		PHTHALATES						HALOGENATED METHANES								CHLORINATED C2's								CHLORINATED C3's				MISCELLANEOUS				CHLORDALKYL ETHERS				METALS							
									HALOAKYL ETHERS																																																											
Pyrene	2-Chloronaphthalene	PCB's	Chlorobenzene	o-Dichlorobenzene	m-Dichlorobenzene	p-Dichlorobenzene	1,2,4-Trichlorobenzene	Hexachlorobenzene	2-Chlorophenol	4-Chloro-m-cresol	2,4-Dichlorophenol	2,4,6-Trichlorophenol	Pentachlorophenol	4-Chlorophenylphenyl ether	4-Bromophenylphenyl ether	Nitrobenzene	2,4-Dinitrotoluene	2,6-Dinitrotoluene	2-Nitrophenol	4-Nitrophenol	2,4-Dinitrophenol	4,6-Dinitrophenol	N-Nitrosodimethylamine	N-Nitrosodiphenylamine	N-Nitrosodi-n-propylamine	1,2-Diphenylhydrazine	Benzidine	3,3'-Dichlorobenzidine	Dimethyl phthalate	Diethyl	Di-n-butyl	Di-n-octyl	bis(2-Ethylhexyl)	Butylbenzyl	Methyl bromide	Methyl chloride	Methylene chloride	Bromoform	Chloroform	Bromodichloromethane	Dibromochloromethane	Dichlorodifluoromethane	Trichlorofluoromethane	Carbon tetrachloride	Chloroethane	Chloroethylene	1,2-Dichloroethane	1,2-1-Dichloroethylene	1,1-Dichloroethylene	1,1-Dichloroethane	1,1,2-Trichloroethane	1,1,1-Trichloroethane	Trichloroethylene	Tetrachloroethylene	1,1,2,2-Tetrachloroethane	Hexachloroethane	1,2-Dichloropropane	1,3-Dichloropropylene	Hexachlorobutadiene	Hexachlorocyclopentadiene	bis(Chloromethyl)ether	bis(Chloroethyl)ether	bis(2-Chloroisopropyl)ether	2-Chloroethylvinyl ether	bis(2-Chloroethoxy)methane	Acrolein	Acrylonitrile	Cyanide	Isophorone	Antimony	Arsenic	Beryllium	Cadmium	Chromium	Copper	Lead	Mercury	Nickel	Selenium	Silver	Thallium	Zinc
	O																												O																																									
				O															O	O																																																
			O										O						O	O																O		O									O	O																				
		O							◊										O	O											◊					◊																																			
													●1						◊	●1	●1																																																			

lysis
lysis
selection criterion
lysis
lysis

KEY: ● = >0.5 ppm
✱ = 0.1 - 0.5 ppm
◊ = .01 - 0.1 ppm
O = <.01 ppm, or analysis failed to detec

TABLE V-16 (Continued)

PRIORITY POLLUTANTS IN EFFLUENTS OF PRECURSOR-GENERIC PROCESS COMBINATIONS

	CHLOROAROMATICS					CHLOROPHENOLS					NITROAROMATICS			NITROPHENOLS					NITROSAMINES			BENZIDINES			PHTHALATES						HALOGENATED METHANES										CHLORINATED C2's									CHLORINATED C3's						MISCELLANEOUS CHLOROALKYL ETHERS					METALS								
	2-Chloronaphthalene	PCB's	Chlorobenzene	o-Dichlorobenzene	m-Dichlorobenzene	p-Dichlorobenzene	1,2,4-Trichlorobenzene	Hexachlorobenzene	2-Chlorophenol	4-Chloro-m-cresol	2,4-Dichlorophenol	2,4,6-Trichlorophenol	Pentachlorophenol	4-Chlorophenyl phenyl ether	4-Bromophenyl phenyl ether	Nitrobenzene	2,4-Dinitrotoluene	2,6-Dinitrotoluene	2-Nitrophenol	4-Nitrophenol	2,4-Dinitrophenol	4,6-Dinitrophenol	N-Nitrosodimethyl amine	N-Nitrosodiphenyl amine	N-Nitrosodi-n-propyl amine	1,2-Diphenylhydrazine	Benzidine	3,3'-Dichlorobenzidine	Dimethyl phthalate	Diethyl	Di-n-butyl	Di-n-octyl	bis(2-Ethylhexyl)	Butylbenzyl	Methyl bromide	Methyl chloride	Methylene chloride	Bromoform	Chloroform	Bromodichloromethane	Dibromochloromethane	Dichlorodifluoromethane	Trichlorofluoromethane	Carbon tetrachloride	Chloroethane	Chloroethylene	1,2-Dichloroethane	1,2-1-Dichloroethylene	1,1-Dichloroethylene	1,1-Dichloroethane	1,1,2-Trichloroethane	1,1,1-Trichloroethane	Trichloroethylene	Tetrachloroethylene	1,1,2,2-Tetrachloroethane	Hexachloroethane	1,2-Dichloropropane	1,3-Dichloropropylene	Hexachlorobutadiene	Hexachlorocyclopentadiene	bis(Chloromethyl)ether	bis(Chloroethyl)ether	bis(2-Chloroisopropyl)ether	2-Chloroethyl vinyl ether	bis(2-Chloroethoxy)methane	Acrolein	Acrylonitrile	Cyanide	Isophorone	Antimony	Arsenic	Beryllium	Cadmium	Chromium	Copper	Lead	Mercury	Nickel	Selenium	Silver	Thallium	Zinc
										O																					O																																								
																			O																																																			
			O						O				O																								O																																	
																													*				*	O							O																															
																													*		O		*	O																																						
																																				O			O																																		
											O	O							O												O	O																																						

ABBREVIATIONS: ACN - Acrylonitrile
AA - Acrylic acid
MMA - Methylmethacrylate

KEY: ● = >0.5 ppm
* = 0.1 - 0.5 ppm
◊ = 0.1 - 0.1 ppm
O = <.01 ppm, or analysis failed to detect

PRECURSOR (FEEDSTOCK) / PRIORITY POLLUTANT GROUPS	AROMATICS			PHENOLS		POLYAROMATICS																CHLORO/		
	Benzene	Toluene	Ethylbenzene	Phenol	2,4-Dimethylphenol	Naphthalene	Acenaphthene	Acenaphthylene	Anthracene	Benzo(a)anthracene	Benzo(a)pyrene	3,4-Benzofluoranthene	Benzo(k)fluoranthene	Benzo(ghi)perylene	Chrysene	Dibenzo(a,h)anthracene	Fluorene	Fluoranthene	Idenol(1,2,3-cd)pyrene	Phenanthrene	Pyrene	2-Chloronaphthalene	PCB's	Chlorobenzene	o-Dichlorobenzene	m-Dichlorobenzene
ADDITION POLYMERIZATION																										
ACN/Polybutadiene/Styrene		◊	◊	◊																						
ACN/Styrene		*	*	*																						
Styrene/Butadiene	◊	◊	●	●[1]																				0		
Styrene (suspension)	*	◊	*	◊																						
Styrene (bulk)	●	●	●	*																						
ACN/AA esters/MMA				0																						
Methylmethacrylate		●																								
Dicyclopentadiene	●	*	*	*	0	*	0	0	0								0	0		0	0					
Ethylene (HDPE)	*	●		0		0				0																
Ethylene (LDPE)	0	0	0	◊		0	0	◊	0		0	0	0	0		0	0	0	0	0	0					
Propylene	*	●	●	0	0	0			0	0					0		0			0	0					
Vinyl acetate		0	0																							
Vinyl chloride (susp.)			0	*																						
Vinyl chloride (emul.)				0																						
Vinyl chloride (bulk)				0																						
FIBER SPINNING																										
Acrylic resin				0																						
Cellulose				*																						
CONDENSATION/POLYMERIZATION																										
Acetone/Phenol	0	●	0	●	0	0	0	0	0								0			0	0			*		
n-Butyraldehyde	0	0	0	*																				◊		
Epichlorohydrin/Bisphenol A		●[4]	◊	●																				●[4]		
Melamine/Formaldehyde																										
Phenol/Formaldehyde		●		●		*																				
Urea/Formaldehyde		0		◊																						
Caprolactam	*	◊	0																					0		
Nylon salt	0			*																						
Aniline/Formaldehyde				*																						
ETHOXYLATION																										
Ethylene oxide/water	●	●	●	*		*	◊	◊	0								◊			0						
Ethylene glycol[2]																										
Ethylene glycol still btm's[3]	0	0	0	◊		0	0		0	0	0	0	0	0	0	0	0	0	0	0	0					
C11, C12 Linear alcohols[3]	0	0	0			0	0		0	0	0	0	0	0	0	0	0	0	0	0	0					
Alkylphenol		●		●																						
PROPOXYLATION																										
Propylene glycol	◊	0		*		◊											◊									
Glycerin	◊	◊	◊	0																						

NOTES:
1 Extraneous to product process
2 3460-01 has similar analysis
3 3460-03 has similar analysis.
4 Epoxy resin process proximal to TDI process

V-55

TABLE V-16 (Continued)

PRIORITY POLLUTANTS IN EFFLUENTS OF PRECURSOR-GENERIC PROCESS COMBINATIONS

			CHLOROAROMATICS						CHLOROPHENOLS					HALOARYL ETHERS		NITROAROMATICS			NITROPHENOLS				NITROSAMINES			BENZIDINES			PHTHALATES						HALOGENATED METHANES										CHLORINATED C2's												CHLORINATED C3's				CHLOROALKYL ETHERS					MISCELLANEOUS				METALS												
Pyrene	2-Chloronaphthalene	PCB's	Chlorobenzene	o-Dichlorobenzene	m-Dichlorobenzene	p-Dichlorobenzene	1,2,4-Trichlorobenzene	Hexachlorobenzene	2-Chlorophenol	4-Chloro-m-cresol	2,4-Dichlorophenol	2,4,6-Trichlorophenol	Pentachlorophenol	4-Chlorophenyl phenyl ether	4-Bromophenyl phenyl ether	Nitrobenzene	2,4-Dinitrotoluene	2,6-Dinitrotoluene	2-Nitrophenol	4-Nitrophenol	2,4-Dinitrophenol	4,6-Dinitrophenol	N-Nitrosodimethyl amine	N-Nitrosodiphenyl amine	N-Nitrosodi-n-propyl amine	1,2-Diphenylhydrazine	Benzidine	3,3'-Dichlorobenzidine	Dimethyl phthalate	Diethyl	Di-n-butyl	Di-n-octyl	bis(2-Ethylhexyl)	Butylbenzyl	Methyl bromide	Methyl chloride	Methylene chloride	Bromoform	Chloroform	Bromodichloromethane	Dibromochloromethane	Dichlorodifluoromethane	Trichlorofluoromethane	Carbon tetrachloride	Chloroethane	Chloroethylene	1,2-Dichloroethane	1,2-t-Dichloroethylene	1,1-Dichloroethylene	1,1-Dichloroethane	1,1,2-Trichloroethane	1,1,1-Trichloroethane	Trichloroethylene	Tetrachloroethylene	1,1,2,2-Tetrachloroethane	Hexachloroethane	1,2-Dichloropropane	1,3-Dichloropropylene	Hexachlorobutadiene	Hexachlorocyclopentadiene	bis(Chloromethyl)ether	bis(Chloroethyl)ether	bis(2-Chloroisopropyl)ether	2-Chloroethylvinyl ether	bis(2-Chloroethoxy)methane	Acrolein	Acrylonitrile	Cyanide	Isophorone	Antimony	Arsenic	Beryllium	Cadmium	Chromium	Copper	Lead	Mercury	Nickel	Selenium	Silver	Thallium	Zinc
																																	◊				0		0																													◊			0			●	*							●
)																													0	●[1]	0	0	0	0				0		0	0						*						0	0		0						0	0		*	0	0			0	0		0	*	●	*	◊	0	0		ɛ	0
)																													0	●[1]	0	0	0	0				0		0	0						*						0	0		0						0	0		*	0	0			0	0		0	*	●	*	◊	0	0		ɛ	0
																				◊											0	0	0						0					0								◊														●	●[1]	0						●	*	◊				◊		
			0										*						0	●[1]											0		0				0		◊				0	0			0	0	0			0	0		0														0			0			*	*		0	0	0			
																																					0		0																																	◊			*	*							0
													◊						0														◊																			0	0		0																				0	◊		0		◊	0		
			0										*							●[1]											0		0				0		◊				0	0			0	0	0																				0			0			*	*		0	0	0			
																																																																					◊			●			*	*							◊
																													●[3]		●[3]																																										0	0	0	0	0					
																																																																				●[1]	0									0					
																													0	●	◊								0									0																										*	●		◊					
																																	●				0		0										0		0												*								0		0	0	0	0	0					
												0																		0	0		0			0	0		0	0			0	0			0		0	0		0	0		0		0	0																◊	0	◊	0		◊		ɛ	
	◊		0								◊	◊							*															●					*					0	■								◊				◊												0		*			◊	*	*	●		●		*		0
									◊		◊																				*						*																														●									0		0					
																																							0																																								0					
		0																													◊			0					◊				0	◊				0					*		0														◊		0	*			*	◊	◊		*		◊		◊
									■			0																																																												0	0	0	0	0	●	*	0	0	0	0	ɛ	0
									*																																																																										
																															◊		0						*														0				0	0																	◊	*							
																																					0		*										◊	*	●		●		0		●	●										0							*							
																																					◊		◊	0																													◊			0			*	*							
																																	◊				0		0							0	0				0		◊	0															◊					0	*	◊	0						
									0																				◊					◊			0		0	0				0	0				0	0	0	0			0		0											0			0		0	*	◊	0	0		0		ɛ	◊
											0	*							◊											0	0			0		0	0		0	0			0	0			0		0	0		0	0		0		0	0																◊	●	*	0		0		ɛ	
																															●[1]		◊																																									◊	*			0				0
																																					◊		◊	0																													◊			0			*	*							●
																																	◊				◊		◊	0																													◊[4]			0			●	*							●
																																	◊				0		0																													●			◊			●	●							●
																																	◊						*					●[1]								*		0														●							●	●							●
									0																																																															0	0	0	5	5	5	0	0	0	0	0	ɛ	0
									0											0												0	0				◊	0	0													0																		0						●	0			0				0

ther, sampled after
rsion.
tion selection criterion

ABBREVIATIONS:
MAA - Methacrylic acid
TPA - Terephthalic acid
PA - Phthalic anhydride
MA - Maleic anhydride
POCl$_3$ - Phosphoryl trichloride

KEY:
● = >0.5 ppm
* = 0.1 - 0.5 ppm
◊ = .01 - 0.1 ppm
0 = <.01 ppm, or analysis failed to detect

PRECURSOR (FEEDSTOCK) / PRIORITY POLLUTANT GROUPS	AROMATICS			PHENOLS		POLYAROMATICS													CHLOR		
	Benzene	Toluene	Ethylbenzene	Phenol	2,4-Dimethylphenol	Naphthalene	Acenaphthene	Acenaphthylene	Anthracene	Benzo(a)anthracene	Benzo(a)pyrene	3,4-Benzofluoranthene	Benzo(k)fluoranthene	Benzo(ghi)perylene	Chrysene	Dibenzo(a,h)anthracene	Fluorene	Fluoranthene	Indeno(1,2,3-cd)pyrene	Phenanthrene	Pyrene	2-Chloronaphthalene	PCB's	Chlorobenzene	o-Dichlorobenzene
ESTERIFICATION/POLYMERIZATION																									
Acetone cyanohydrin				◊																					
Acetic acid/n-Propanol	o	o	o	◊		o	o	o	o		o	o	o	o		o	o	o	o	o	o				
Acetic acid/Pentanol (Amyl)	o	o	o	◊		o	o	o	o		o	o	o	o		o	o	o	o	o	o				
Acetic acid/Ethylene			◊	◊																					
Acrylic acid/n-Butanol	◊	o	o	*																				o	
Acrylic acid/Ethanol	*			●[1]																					
Acrylic acid/Isobutanol		*		●[1]																					
Acrylic acid/2-Ethylhexanol	◊	o	o	*																				o	
MAA/Butanol		●[1]		o																					
TPA/Methanol				●																					
TPA/Ethylene glycol			●	●		*																			
PA/Ethanol				◊																					
PA/2-Ethylhexanol	*			◊																					
PA/C11-C14 Alcohols	◊	◊	*	●	●	o	o	o	o								o	o		o	o				
PA/Butanol/Benzyl chloride	*	●	o	◊					o											o		◊		o	
PA Glycerin	◊	●	*	●		●																			
PA/MA/Propylene glycol				●																					
$POCl_3$/Phenol/Isodecanol	o	●	*	●					o											o			o		
Salicylic acid/Methanol	o	o		●																					
HYDRATION/HYDROLYSIS																									
Allyl alcohol				◊		*		◊																	
Epichlorohydrin	●[1]	o		o																					
Acetone cyanohydrin																									
Polyvinyl acetate [2]			◊	o	o																				
Ethylene	◊	o	o	◊	◊	o	◊	◊	o								o			o	◊				
Propylene	●[1]	◊	o	◊	o	*	o	o	o								o	o		o	o				
Butene				◊		◊																			
HYDROCYANATION																									
Acetone																									
Acetone/Methanol				◊																					
C13-C19 Olefins				*																					
HYDRODIMERIZATION																									
Acrylonitrile				●[1]																					
ISOMERIZATION																									
Maleic acid	o	o		o																					
m-Xylene	◊	*	o	◊	◊	◊			o	o					o		o			o	o				

NOTES:
1. Extraneous to product process
2. 0070-13 has similar analysis
3. May be attributable to o-xylene impurity, or misidentification of the terephthalate ester
4. Value probably higher, sample cyanide removal system.
5. Less than verification select

the combined flow leaves the production area to join the main body of wastewater within the plant. A minor source of metallic priority pollutants is the normal deterioration of production equipment that comes into contact with process water.

Extraneous priority pollutants were also reported in product/process effluents. Priority pollutants may be considered extraneous when they cannot be reconciled with the precursor (or its impurities) and the process chemistry. In Table V-16, extraneous priority pollutants were flagged only when they were reported at >.5 ppm. Thus, the failure to flag a priority pollutant at <.5 ppm does not necessarily preclude it from being extraneous. As a general rule, one extraneous generic group member indicates that the entire group is probably anomalous. The phthalate esters are an example of such a group that persists throughout the verification data.

Given the several sources of extraneous priority pollutants reported in product/process effluents, these anomalies may simply reflect the practical sampling difficulty of completely isolating an individual effluent from the effluents of surrounding production areas. Wastewater collection systems were not, in most cases, designed with that objective in mind. Another possible explanation for extraneous priority pollutants is the sensitivity of the GC detector, which responds to a number of compounds that may be present at low levels. Without extra analytical effort, it becomes increasingly difficult to unequivocally identify priority pollutants at lower concentrations.

Implications of the Verification Data for Monitoring Priority Pollutants in Wastewater

A review of the verification data summarized in TABLE V-17 shows an increasing number of both predictable and extraneous priority pollutants being reported at progressively lower concentration ranges for virtually all of the product/process effluents. This trend has been tabulated in Table V-16.

Current analytical techniques have the capacity to measure priority pollutants to very low levels. As detection limits are extended to ever lower concentrations ranges, the number of priority pollutants reported would be expected to increase sharply. The number of compounds detected in a sample of water is related to the sensitivity of the measurement technique: as the detection level decreases an order of magnitude, the number of compounds detected increases accordingly. Based on the number of compounds detected by current methods, one would expect to find every known compound at a concentration 10^{-12} g/l (1 ppt) or higher in a sample of treated drinking water (Donaldson, 1977). Though not the same for all priority pollutants, there is a concentration level below which their reliable identification and measurement becomes routinely impractical.

In Table V-17, it is important to note the average number of pollutants reported in the three higher concentration ranges (i.e., >.01 ppm) for individual product/process effluents. These typically total around 9 to 10 pollutants per effluent. Within a plant, the wastewater collection system combines the product/process effluents of a production area and merges with the combined effluents of other production areas, ultimately routing the overall combination to the main treatment facility. Because of the limited

TABLE V-17

NUMBER OF PRIORITY POLLUTANTS REPORTED VS. CONCENTRATION

Concentration Range, ppm	<.01	.01 - .1	.1 - .5	>.5
Pollutants Reported in Range	1256	564	303	454
% Total Pollutants in Range	48.7	21.8	11.7	17.6
Average* Number of Pollutants in Each Product/Process Effluent	8.8	4.0	2.1	3.2

*142 product/process effluents with unique analyses were used to tabulate the number of pollutants falling into each concentration range. Approximately 30 product/process effluents in Table V-16 could not be isolated for individual sampling, but were assigned an analysis duplicating that of a product/process effluent with which they were closely associated.

number of critical precursor-generic process combinations and duplication among product/processes contributing to these various in-plant effluents, there are usually no more than 10 to 20 priority pollutants in the combined wastewater of an entire plant. These may be condensed into only a few generic groups of organic priority pollutants that are generally predictable from the precursor-generic process combinations represented by the mix of product/processes at a plant.

RAW WASTEWATER CHARACTERIZATION DATA

General

As described under Water Usage earlier in this chapter, the Organic Chemicals and Plastics/Synthetic Fibers industries generate significant volumes of wastewater containing a variety of pollutants. Most of this raw wastewater receives some treatment either as an individual process waste stream or at a wastewater treatment plant serving waste streams from the whole manufacturing facility (see Section VII). To decide what pollutants merit regulation and evaluate what technologies effectively reduce discharge of these pollutants, data characterizing the raw wastewaters were collected and evaluated. This section describes the Agency's approach to this important task and summarizes the results.

Raw Wastewater Data Collection Studies

The Guidelines Development Methodology in Section II introduced the many wastewater data collection efforts undertaken for development of these regulations (see especially Table II-1). Studies which produced significant data on raw wastewater characteristics include the 308 Surveys, the Screening Study Phases I and II, the Verification Study, and the CMA Five-Plant Study. The 308 Surveys have been described in Section II; the remaining studies are summarized in TABLE V-18 and discussed below. The analytical and QA/QC methods used in each of the studies are discussed in Appendix C to this report. The results of the studies are presented in "Wastewater Data Summary" at the end of this Section.

Screening Phase I. The wastewater quality data reported in the 308 Questionnaires were the result of monitoring and analyses by each of the individual plants and their contract laboratories. To expand its priority pollutant database and improve data quality by minimizing the discrepancies among sampling and analysis procedures, EPA in 1977 and 1978 performed its Phase I Screening Study. The Agency and its contractors sampled at 131 plants. As discussed under Guidelines Development Methodology, the plants were chosen because they operated product/processes that produce the highest volume organic chemicals and plastics/synthetic fibers.

Samples were taken of the raw plant water, some product/processes influents and effluents, and influents and effluents at the plant wastewater treatment facilities. Samples were analyzed for all priority pollutants except asbestos, and for several conventional and nonconventional pollutants. Screening samples were collected in accordance with procedures described in an EPA Screening Procedures Manual (EPA 1977). Samples for liquid-liquid

TABLE V-18

OVERVIEW OF WASTEWATER STUDIES INCLUDED IN BAT RAW WASTE STREAM DATA BASE

ELEMENT	STUDY			
	SCREENING		VERIFICATION	CMA 5-PLANT
	Phase I	Phase II		
Dates	August 1977 to March 1978	December 1979	1978 to 1980	June 1980 to May 1981
Number of Plants	131	40	37	5
Direct Dischargers	-	14	30	5
Indirect Dischargers	-	24	5	-
Other Dischargers	-	2	2	-
Plant Selection objective	High volume chemicals	Specialty chemicals	Verify specific pollutants from product/processes	Chemical plants with well-designed and well-operated activated sludge treatment systems
Sampling Locations	Raw water. Treatment influent and effluent. Some product/process effluents.	Same as Phase I.	Product/process influents and effluents in 29 plastic, 147 organic. Raw water.	Treatment influent and effluent. "Treatment" included neutralization and clarification.
Sampling duration (a)	1 day	1 day	3 days	4 to 6 weeks
Pollutants tested:	All priority pollutants but asbestos.	Same as Phase I	Specific pollutants from specific product/processes	Conventionals and TOC, COD; no heavy metals; selected organic pollutants, no PCB's or pesticides
Analytical methods for organic pollutants	GC/MS, 1977 QA/QC protocol; 4-AAP for phenols	GC/MS, 1979 QA/QC protocol.	GC/CD with confirmatory GC/MS on 10% of samples.	Mostly GC/MS or GC
Labs Participating	EPA Regions VII, V, IV; Envirodyne, Carborundum, Midwest Research Institute (MRI)	Environmental Science & Engineering.	Labs: Envirodyne, MRI, Southwest Research Institute, Gulf South Research Institute, Jacobs (PJB Labs), Acurex.	3 EPA contract labs, 1 CMA contract lab, & 4 chemical plant labs.

(a) Generally, samples were 24-hour composites; cyanide, phenols, and volatile organics were generally grab samples or a series of grab samples.

extraction (all organic pollutants except the volatile fraction) and for metals analyses were collected in glass compositing bottles over a 24-hour period, using an automatic sampler generally set for a constant aliquot volume and constant time, although flow- or time-proportional sampling was allowed. For metals analysis, an aliquot of the final composite sample was poured into a clean bottle. Some samples were preserved by acid addition in the field, in accordance with the 1977 manual; acid was added to the remaining samples when they arrived at the laboratory.

For purge and trap (volatile organic) analysis, wastewater samples were collected in 40- or 125-ml vials, filled to overflowing, and sealed with Teflon-faced rubber septa. Where dechlorination of the samples was required, sodium thiosulfate or sodium bisulfite was used.

Cyanide samples were collected in 1-liter plastic bottles as separate grab samples. These samples were checked for chlorine by using potassium-iodide starch test-paper strips, treated with ascorbic acid to eliminate the chlorine, then preserved with 2 ml of 10N sodium hydroxide/liter of sample (pH 12).

Samples for total (4AAP) phenol colorimetric analysis were collected in glass bottles as separate grab samples. These samples were acidified with phosphoric or sulfuric acid to pH 4, then sealed.

All samples were maintained at 4°C for transport and storage during analysis. Where sufficient data were available, other sample preservation requirements (e.g., those for cyanide, phenol and VOA's by purge and trap as described above) were deleted as appropriate (e.g., if chlorine was known to be absent). No analysis was performed for asbestos during the screening and verification efforts. A separate program was subsequently undertaken for determination of asbestos (See Section VI).

Screening Phase II. In December 1979, samples were collected from an additional 40 plants (known as Phase II facilities) manufacturing products such as dyes, flame retardants, coal tar distillates, photographic chemicals, flavors, surface active agents, aerosols, petroleum additives, chelating agents, microcrystalline waxes, and other low volume specialty chemicals. As in the Phase I Screening study, samples were analyzed for the all priority pollutants except asbestos. The 1977 EPA Screening Procedures Manual was followed in analyzing priority pollutants. As in Screening Phase I, some samples for metals analysis were preserved by addition of acid in the field (in accordance with the 1977 Manual) and acid was added to the remaining samples when they arrived at the laboratory. In addition, the organic compounds producing peaks not attributable to priority pollutants with a magnitude of at least one percent of the total ion current were identified by computer matching.

Intake, raw influent, and effluent samples were collected for nearly every facility sampled. In addition, product/process wastewaters which could be isolated at a facility were also sampled, as were influents and effluents from some treatment technologies in place. Fourteen direct dischargers, 24 indirect dischargers and 2 plants discharging to deep wells were sampled.

TABLE V-19 lists the product/process and other waste streams sampled at each plant.

Verification Program. The Verification Program was designed to verify the occurrence of specific priority pollutants in waste streams from individual product/processes. Product/processes to be sampled were chosen to maximize coverage of the product/processes used to manufacture chemicals selected according to the priorities discussed in Section II, Guidelines Development Methodology. The priority pollutants selected for analysis in the waste stream from each product/process were chosen to meet either of two criteria:

(1) They were believed to be raw materials, precursors, or products in the product/process, according to the process chemistry (see Section IV); or

(2) They had been detected in the grab samples taken several weeks before the three-day Verification exercise (see below) at concentrations exceeding the threshold concentrations listed in TABLE V-20.

The threshold concentrations listed in Table V-20 were selected as follows. The concentrations for pesticides, PCBs, and other organics are approximate quantitative detection limits. The concentrations for arsenic, cadmium, chromium, lead, and mercury are one half the national Drinking Water Standard (Federal Register, Vol. 40, No. 248, December 24, 1975, pp. 59566-74).

The Agency sampled at six integrated manufacturing facilities for the pilot program to develop the "Verification Protocol". Thirty-seven plants were eventually involved in the Verification effort. Samples were taken from the effluents of 147 product/processes manufacturing organic chemicals and 29 product/processes manufacturing plastics/synthetic fibers, as well as from treatment system influents and effluents at each facility.

Each plant was visited about four weeks before the three-day verification sampling to discuss the sampling program with plant personnel, to determine in-plant sampling locations and to take a grab sample at each designated sampling site. These samples were analyzed to develop the analytical methods used at each plant for the three-day verification exercise and to develop the target list of pollutants described above for analyses at each site during the three-day sampling. Some pollutants that had been put on the list for verification since they were believed to be raw materials, precursors, or coproducts were not detected in the verification program grab samples. If such a pollutant was also not detected in the sample from the first day of the three-day verification sampling, it was dropped from the analysis list for that sample location. Other compounds were added to the analysis list since they were found in the Verification grab sample at a concentration exceeding the threshold criteria in Table V-20. Priority pollutants known by plant personnel to be present in the plant's wastewater were also added to the Verification list.

At each plant, Verification samples generally included: process water supply; product/process effluents; and treatment facility influent and effluent. Water being supplied to the process was sampled to establish the background concentration of priority pollutants. The product/process effluent waste

TABLE V-19

PHASE II SCREENING - PRODUCT/PROCESS AND OTHER WASTE STREAMS SAMPLED AT EACH PLANT

Plant Number	Waste Streams Sampled
1	Combined raw waste (fluorocarbon)
2	Anthracene Coal tar pitch
3	Combined raw wastes (dyes)
4	Combined raw wastes (coal tar)
5	Combined raw wastes (dyes)
6	Oxide Polymer
7	Freon
8	Freon
9	Ethoxylation
10	Nonlube oil Additives Lube oil Additives
11	Combined raw wastes (dyes)
12	Combined raw wastes (flavors)
13	Combined raw wastes (specialty chemicals)
14	Combined raw wastes (flavors)
15	Hydroquinone
16	Esters Polyethylene Sorbitan monosterate
17	Dyes
18	Combined raw wastes (surface active agents)
19	Fatty acids

TABLE V-19 (continued)

Plant Number	Waste Streams Sampled
20	Organic pigments Salicylic acid Fluorescent brightening agent
21	Surfactants
22	Dyes
23	Combined raw wastes (flavors)
24	Chlorination of paraffin
25	Phthalic anhydride
26	Combined raw waste (unspecified)
27	Dicyclohexyl phthalate
28	Plasticizers Resins
29	Combined raw waste (unspecified)
30	Polybutyl phenol Zinc Dialkyldithiophosphate Calcium phenate Dithiothiadiazole Calcium sulphonate Mannich condensation product Oxidized co-polymers
31	Tris (β-chloroethyl) phosphate
32	Ether sulfate sodium salt Lauryl sulfate sodium salt Xylene distillation
33	Dyes
34	Maleic anhydride Formox formaldehyde Phosphate ester Hexamethylenetetramine

TABLE V-19 (concluded)

Plant Number	Waste Streams Sampled
35	Acetic acid
36	Combined raw waste (coal tar)
37	"680" Brominated fire retardants Tetrabromophthalic anhydride Hexabromocyclododecane
38	Hexabromocyclododecane
39	Fatty acid amine ester Calcium sulfonate in solvent (alcohol) Oil field deemulsifier blend (aromatic solvent) Oxylakylated phenol--formaldehyde resin Ethoxylated monyl phenol Ethoxylated phenol--formaldehyde resin
40	Combined raw waste (surface active agents)

TABLE V-20

SELECTION CRITERIA FOR TESTING
PRIORITY POLLUTANTS IN VERIFICATION SAMPLES

Parameter	Criterion (μg/l)
Pesticides and PCBs	0.1
Other Organics	10
Total Metals:	
Antimony	100
Arsenic	25
Beryllium	50
Cadmium	5
Chromium	25
Copper	20
Lead	25
Mercury	1
Nickel	500
Selenium	10
Silver	5
Thallium	50
Zinc	1,000
Total Cyanides	20

loads were later corrected for these influent waste loadings. Product/process samples were taken at locations that would best provide representative samples. At various plants, samples were taken at the influent to and effluent from both "in-process" and "end-of-pipe" wastewater treatment systems.

Samples were taken on each of three days during the Verification exercise. As in Phase I and II Screening studies, 24-hour composite samples for extractable organic compounds and metals were taken with automatic samplers. Where automatic sampling equipment would violate plant safety codes requiring explosion-proof motors, equal volumes of sample were collected every two hours over an 8-hour day and manually composited in a glass (2.5-gal) container. Raw water supply samples were typically collected as daily grab samples because of the low variability of these waters.

Samples for cyanides analysis were collected in plastic bottles (either as a single grab sample each day or as an equal-volume, 8-hour composite) and were preserved as in the screening program. Samples for analysis of volatile organic compounds were also collected and preserved as in the screening program, in headspace-free sealed vials; where headspace analysis of volatile organic compounds was planned, sample bottles were filled half way. No 4-AAP phenol analyses were run during Verification. Sample collection and preservation procedures for each analytical method are documented in Appendix C.

The temperature and pH of the sample, the measured or estimated wastewater flow at the time of sampling, and the process production levels were all recorded. Weather and plant operating conditions during the sampling period were also recorded, particularly in connection with operational upsets (in the production units or wastewater treatment facilities) that could yield a sample not representative of typical operation.

Analytical methods for cyanides were the same as those used in Phases I and II of Screening. Analytical methods for heavy metals conformed to the 1977 Manual; all samples were preserved by addition of acid in the field. For organic compounds, however, gas chromatography with conventional detectors was used instead of the GC/MS that was used in the Screening program. GC/MS analysis was used on about ten percent of the samples to confirm the presence or absence of pollutants whose GC peaks overlapped other peaks. The analytical methods finally developed were usually applicable (with minor modifications) to all sampling sites at any given plant.

CMA Five-Plant Sampling Program. From June 1980 to May 1981, the Chemical Manufacturers Association (CMA), with cooperation from EPA and five participating chemical plants, performed the CMA Five-Plant Study to gather longer-term data on biological treatment of toxic pollutants at organic chemicals plants. The three primary objectives of the program were to:

> Assess the effectiveness of biological wastewater treatment for the removal of toxic organic pollutants;

- Investigate the accuracy, precision, and reproducibility of the analytical methods used for measuring toxic organic pollutants in organic chemicals industry wastewaters; and

- Evaluate potential correlations between biological removal of toxic organic pollutants and biological removal of conventional and nonconventional pollutants.

Since the biological wastewater treatment system influent samples were taken upstream not only of the biological treatment but also of any preliminary neutralization and settling of each chemical plant's combined waste stream, the biological treatment influent samples reflect each facility's raw waste load following any in-plant treatment of waste streams from individual product/processes.

EPA nominated the five participants because of the specific toxic organic pollutants expected to be found. The five participating organic chemicals manufacturing plants were characterized as having well-designed and well-operated activated sludge treatment systems. Typically, seven to thirty sets of influent and effluent samples (generally 24-hour composites) were collected at each plant over a four- to six-week sampling period.

Only selected toxic organic pollutants were included in this study; pesticides, polychlorinated biphenyls, metals, and cyanides were not measured. Samples were analyzed for a selected group of toxic organic pollutants specific to each location and for specified conventional and nonconventional pollutants. Not all toxic organic pollutants included in this study were analyzed at all locations.

EPA's contract laboratories analyzed all influent and effluent samples for toxic organic pollutants using gas chromatography/mass spectrometry (GC/MS) or gas chromatography (GC) procedures (44 FR 69464 et. seq., December 3, 1979, or variations acceptable to the EPA Effluent Guidelines Division). One EPA laboratory used GC coupled with flame ionization detection (GC/FID). Approximately 25 percent of the influent and effluent samples collected at each participating plant were analyzed by the CMA contractor using GC/MS procedures (44 FR 69464 et. seq., December 3, 1979, or equivalent). Some variation occurred in the analytical procedures for the toxic organic pollutants used by both the EPA contract laboratories and the CMA laboratory during this study. An extensive quality control/quality assurance program was included to define the precision and accuracy of the analytical results.

Each participant analyzed conventional and nonconventional pollutants in their influent and effluent wastewaters using the methods found in "Methods of Chemical Analysis of Water and Wastes," EPA 600/4-79-020, March 1979. Additionally, four of the participants analyzed from 25 to 100 percent of the samples collected by EPA for some of the toxic organic pollutants being discharged by the Plant. Those analyses at least duplicated the CMA contractor's analyses.

The influent loadings measured in this study prior to end-of-pipe treatment are discussed later in this chapter. The biological treatment effluent results are discussed and used in Section IX. The report by CMA's contractor (Engineering-Science, Inc., "CMA/EPA Five-Plant Study", April, 1982) includes details of the sampling, analysis, data and evaluation of results.

Wastewater Data Summary

General. The Agency's wastewater data collection studies discussed above yielded data of varying quality on the concentrations of priority pollutants in product/process effluents and wastewater treatment influents and effluents at over 170 OCPSF manufacturing plants. Before being used for developing regulations as described in the rest of this document, these data were reviewed as explained in Appendix C to eliminate questionable numbers resulting from improper sampling, faulty sample preservation, and inappropriate analytical or quality assurance/quality control procedures. The Agency concluded that the reviewed and edited data from the Verification Phase and CMA Five-Plant studies were good enough to use quantitatively (e.g., to develop numerical effluent limits), while data from Phases I and II of the Screening Study were only good enough to use qualitatively -- to decide which pollutants discharged by the OCPSF Industries are of national concern (Section VI) and for the multi-variate subcategorization analysis (Section IV).

This section summarizes estimated priority pollutant waste loadings for two sets of OCPSF industry plants -- first, the small number of plants sampled in the Verification and CMA Five-Plant studies; and second, all the plants addressed by this regulation. The two sets of waste loadings are presented and described below.

Waste Loadings from Verification and CMA Five-Plant Studies. The Verification and CMA Five-Plant studies were both described earlier in this section. In these wastewater data collection studies, the waste water concentrations at each plant were measured upstream of the end-of-pipe treatment plants, but often downstream of treatment of individual product/process waste streams. TABLES V-21 THROUGH V-23 present the summary statistics on the influent wastewater concentrations measured at 34 plants. These are the same 34 Verification and CMA plants for which summary statistics from a slightly different analysis are presented in Section VI. The data incorporated into this summary from the CMA study includes only the GC/MS data, not the GC/CD data. Table V-21 presents the statistics for 28 direct-discharging plants in the Not Plastics-Only subcategory; Table V-22 presents the statistics for three indirect-discharging plants in the Not Plastics-Only subcategory; and Table V-23 presents the statistics for three direct-discharging plants in the Plastics-Only subcategory. The Verification and CMA sampling programs did not include any indirect-discharging plants in the Plastics-Only subcategory.

As noted previously in this section (Raw Wastewater Data Collection Studies), each sample was analyzed for specific priority pollutants. No tests were run for the priority pollutants not listed in Tables V-21 through V-23, including asbestos and most of the pesticides (pollutants number 89 to 105). N-DET is the number of readings above 10 ppb; N-NOTDET is the number of readings at or below 10 ppb. Values below 10 ppb were excluded from the descriptive

TABLE V-21

INFLUENT WASTEWATER CONCENTRATION
SUMMARY STATISTICS FOR TWENTY-EIGHT NOT PLASTICS-ONLY DIRECT DISCHARGING PLANTS*

CHEMNUM	NAME	FRACTION	N NOTDET	N DET	N PLANTS	MINIMUM	MEAN	MEDIAN	MAXIMUM
1	ACENAPHTHENE	BASE/NEUTRAL	26	26	5	12.00	1466.64	103.00	9600.00
2	ACROLEIN	VOLATILES	6	0	0	10.00	10.00	10.00	10.00
3	ACRYLONITRILE	VOLATILES	22	76	4	48.00	58290.11	17200.00	890000.00
4	BENZENE	VOLATILES	31	212	16	11.00	19485.66	1440.00	390000.00
5	BENZIDINE	BASE/NEUTRAL	1	0	0	10.00	10.00	10.00	10.00
6	CARBON TETRACHLORIDE	VOLATILES	193	23	6	18.00	5087.61	313.00	45000.00
7	CHLOROBENZENE	VOLATILES	115	40	6	11.00	737.38	33.50	7200.00
8	1,2,4-TRICHLOROBENZENE	BASE/NEUTRAL	11	29	1	98.00	221.21	160.00	550.00
9	HEXACHLOROBENZENE	BASE/NEUTRAL	1	6	1	13.00	35.50	41.00	52.00
10	1,2-DICHLOROETHANE	VOLATILES	84	121	7	35.00	9103.04	530.00	100000.00
11	1,1,1-TRICHLOROETHANE	VOLATILES	108	34	5	12.00	1646.56	215.00	20000.00
12	HEXACHLOROETHANE	BASE/NEUTRAL	1	6	1	52.00	2308.67	2600.00	3400.00
13	1,1-DICHLOROETHANE	VOLATILES	83	15	3	11.00	505.00	382.00	1200.00
14	1,1,2-TRICHLOROETHANE	VOLATILES	94	21	4	11.00	526.24	64.00	1700.00
15	1,1,2,2-TETRACHLOROETHANE	VOLATILES	78	5	2	47.00	454.40	352.00	1100.00
16	CHLOROETHANE	VOLATILES	95	12	2	14.00	402.08	91.00	1563.00
17	BIS (CHLOROMETHYL) ETHER	VOLATILES	1	0	0	10.00	10.00	10.00	10.00
18	BIS (2-CHLOROETHYL) ETHER	BASE/NEUTRAL	0	1	1	2800.00	2800.00	2800.00	2800.00
19	2-CHLOROETHYLVINYL ETHER	VOLATILES	2	0	0	10.00	10.00	10.00	10.00
20	2-CHLORONAPHTHALENE	BASE/NEUTRAL	1	0	0	10.00	10.00	10.00	10.00
21	2,4,6-TRICHLOROPHENOL	ACIDS	37	115	7	10.81	110.37	61.00	1449.00
22	4-CHLORO-M-CRESOL	ACIDS	24	0	0	10.00	10.00	10.00	10.00
23	CHLOROFORM	VOLATILES	144	129	15	10.30	1065.31	520.00	6600.00
24	2-CHLOROPHENOL	ACIDS	107	40	5	11.00	800.38	74.50	15540.00
25	1,2-DICHLOROBENZENE	BASE/NEUTRAL	19	44	5	11.00	659.64	425.00	4350.00
26	1,3-DICHLOROBENZENE	BASE/NEUTRAL	1	0	0	10.00	10.00	10.00	10.00
27	1,4-DICHLOROBENZENE	BASE/NEUTRAL	1	0	0	10.00	10.00	10.00	10.00
28	3,3-DICHLOROBENZIDINE	BASE/NEUTRAL	1	0	0	10.00	10.00	10.00	10.00
29	1,1-DICHLOROETHYLENE	VOLATILES	115	63	7	11.00	843.67	350.00	9100.00
30	1,2-TRANSDICHLOROETHYLENE	VOLATILES	178	24	5	12.00	5417.04	410.00	38000.00
31	2,4-DICHLOROPHENOL	ACIDS	90	33	4	24.00	556.06	600.00	890.00
32	1,2-DICHLOROPROPANE	VOLATILES	7	83	4	14.00	794.92	127.00	14000.00
33	1,3-DICHLOROPROPYLENE	VOLATILES	21	70	2	13.00	513.66	184.50	8700.00
34	2,4-DIMETHYLPHENOL	ACIDS	44	33	5	17.00	3447.38	634.15	19000.00
35	2,4-DINITROTOLUENE	BASE/NEUTRAL	1	5	1	120.00	12924.00	16000.00	18000.00
36	2,6-DINITROTOLUENE	BASE/NEUTRAL	1	5	1	34.00	3436.80	4400.00	4750.00
37	1,2-DIPHENYLHYDRAZINE	BASE/NEUTRAL	1	0	0	10.00	10.00	10.00	10.00
38	ETHYLBENZENE	VOLATILES	30	209	13	20.00	2678.87	223.00	120000.00
39	FLUORANTHENE	BASE/NEUTRAL	63	33	5	19.51	1294.03	91.00	7900.00
40	4-CHLOROPHENYLPHENYL ETHER	BASE/NEUTRAL	1	0	0	10.00	10.00	10.00	10.00
41	4-BROMOPHENYLPHENYL ETHER	BASE/NEUTRAL	1	0	0	10.00	10.00	10.00	10.00
42	BIS-(2-CHLOROISOPROPYL) ETHER	BASE/NEUTRAL	3	6	2	520.00	4736.67	4950.00	9300.00
43	BIS-(2-CHLOROETHOXY) METHANE	BASE/NEUTRAL	1	0	0	10.00	10.00	10.00	10.00

TABLE V-21 (continued)

CHEMNUM	NAME	FRACTION	N NOTDET	N DET	N PLANTS	MINIMUM	MEAN	MEDIAN	MAXIMUM
44	METHYLENE CHLORIDE	VOLATILES	179	71	12	11.00	1628.59	84.00	29000.00
45	METHYL CHLORIDE	VOLATILES	3	1	1	30.00	30.00	30.00	30.00
46	METHYL BROMIDE	VOLATILES	60	2	1	1000.00	1000.00	1000.00	1000.00
47	BROMOFORM	VOLATILES	79	1	1	120.00	120.00	120.00	120.00
48	DICHLOROBROMOMETHANE	VOLATILES	129	28	3	11.00	53.82	42.50	250.00
49	TRICHLOROFLUOROMETHANE	VOLATILES	51	8	1	604.00	231550.50	211500.00	487000.00
50	DICHLORODIFLUOROMETHANE	VOLATILES	2	0	0	10.00	10.00	10.00	10.00
51	CHLORODIBROMOMETHANE	VOLATILES	81	3	1	18.00	19.33	19.00	21.00
52	HEXACHLOROBUTADIENE	BASE/NEUTRAL	1	6	1	83.00	125.33	123.00	170.00
53	HEXACHLOROCYCLOPENTADIENE	BASE/NEUTRAL	2	0	0	10.00	10.00	10.00	10.00
54	ISOPHORONE	BASE/NEUTRAL	22	3	2	490.00	596.67	650.00	650.00
55	NAPHTHALENE	BASE/NEUTRAL	56	57	9	12.00	1301.64	445.85	7849.00
56	NITROBENZENE	BASE/NEUTRAL	101	6	2	20.00	59679.50	85000.00	98000.00
57	2-NITROPHENOL	ACIDS	28	22	5	18.00	5637.23	345.00	38000.00
58	4-NITROPHENOL	ACIDS	17	13	3	31.00	333.31	43.00	1900.00
59	2,4-DINITROPHENOL	ACIDS	74	24	3	35.00	958.58	405.00	3900.00
60	4,6-DINITRO-O-CRESOL	ACIDS	15	0	0	10.00	10.00	10.00	10.00
61	N-NITROSODIMETHYLAMINE	BASE/NEUTRAL	1	0	0	10.00	10.00	10.00	10.00
62	N-NITROSODIPHENYLAMINE	BASE/NEUTRAL	1	0	0	10.00	10.00	10.00	10.00
63	N-NITROSODI-N-PROPYLAMINE	BASE/NEUTRAL	1	0	0	10.00	10.00	10.00	10.00
64	PENTACHLOROPHENOL	ACIDS	31	48	4	12.00	508.50	250.00	6800.00
65	PHENOL	ACIDS	42	231	23	13.00	7477.78	380.00	250000.00
66	BIS-(2-ETHYLHEXYL) PHTHALATE	BASE/NEUTRAL	77	139	9	10.20	1045.39	94.00	33000.00
67	BUTYLBENZYL PHTHALATE	BASE/NEUTRAL	14	0	0	10.00	10.00	10.00	10.00
68	DI-N-BUTYL PHTHALATE	BASE/NEUTRAL	43	111	3	11.00	596.83	180.00	6300.00
69	DI-N-OCTYL PHTHALATE	BASE/NEUTRAL	22	8	1	13.00	46.88	53.00	94.00
70	DIETHYL PHTHALATE	BASE/NEUTRAL	30	92	1	11.00	1136.11	457.50	15000.00
71	DIMETHYL PHTHALATE	BASE/NEUTRAL	45	43	2	11.00	286.76	220.00	1470.00
72	BENZO(A)ANTHRACENE	BASE/NEUTRAL	15	16	4	16.00	692.32	54.00	2400.00
73	BENZO(A)PYRENE	BASE/NEUTRAL	68	6	2	12.92	28.50	26.01	44.00
74	3,4-BENZOFLUORANTHENE	BASE/NEUTRAL	6	2	1	12.00	23.00	23.00	34.00
75	BENZO(K)FLUORANTHENE	BASE/NEUTRAL	8	1	1	12.00	12.00	12.00	12.00
76	CHRYSENE	BASE/NEUTRAL	6	15	2	11.00	592.60	420.00	1900.00
77	ACENAPHTHYLENE	BASE/NEUTRAL	52	30	6	12.00	3490.13	105.05	22000.00
78	ANTHRACENE	BASE/NEUTRAL	22	19	3	151.00	1028.33	300.00	3300.00
79	BENZO(GHI)PERYLENE	BASE/NEUTRAL	19	3	1	10.81	11.52	11.54	12.20
80	FLUORENE	BASE/NEUTRAL	19	32	8	11.00	220.56	71.54	973.0
81	PHENANTHRENE	BASE/NEUTRAL	17	31	8	16.00	2666.55	790.00	13000.00
82	DIBENZO(A,H)ANTHRACENE	BASE/NEUTRAL	8	4	1	10.81	12.78	11.87	16.57
83	INDENO(1,2,3-C,D)PYRENE	BASE/NEUTRAL	19	3	1	10.81	11.52	11.54	12.20
84	PYRENE	BASE/NEUTRAL	73	32	4	18.46	984.76	122.31	6100.00
85	TETRACHLOROETHYLENE	VOLATILES	159	11	4	14.00	15172.00	20000.00	32000.00
86	TOLUENE	VOLATILES	18	248	21	12.00	9266.40	4093.50	160000.00
87	TRICHLOROETHYLENE	VOLATILES	171	47	12	11.00	765.85	35.00	9000.00
88	VINYL CHLORIDE	VOLATILES	77	19	3	11.00	2384.32	22.00	31900.00
102	BHC-ALPHA	PESTICIDES	4	0	0	10.00	10.00	10.00	10.00

TABLE V-21 (concluded)

CHEMNUM	NAME	FRACTION	N NOTDET	N DET	N PLANTS	MINIMUM	MEAN	MEDIAN	MAXIMUM
104	BHC-GAMMA	PESTICIDES	3	0	0	10.00	10.00	10.00	10.00
106	PCB-1242 (AROCHLOR 1242).	PESTICIDES	8	0	0	10.00	10.00	10.00	10.00
107	PCB-1254 (AROCHLOR 1254).	PESTICIDES	3	0	0	10.00	10.00	10.00	10.00
108	PCB-1221 (AROCHLOR 1221).	PESTICIDES	3	0	0	10.00	10.00	10.00	10.00
110	PCB-1248 (AROCHLOR 1248).	PESTICIDES	2	1	1	12.00	12.00	12.00	12.00
114	ANTIMONY (TOTAL)	METALS	3	20	4	30.00	163.00	80.00	630.00
115	ARSENIC (TOTAL)	METALS	17	25	9	11.00	108.96	25.00	1300.00
117	BERYLLIUM (TOTAL)	METALS	0	2	1	20.00	35.00	35.00	50.00
118	CADMIUM (TOTAL)	METALS	48	7	4	12.00	20.57	20.00	40.00
119	CHROMIUM (TOTAL)	METALS	8	115	23	11.00	584.15	300.00	6400.00
120	COPPER (TOTAL)	METALS	22	102	24	13.00	308.40	80.50	9710.00
121	CYANIDE (TOTAL)	METALS	12	80	12	16.00	7761.62	121.59	200000.00
122	LEAD (TOTAL)	METALS	15	54	11	11.00	175.02	58.50	1100.00
123	MERCURY (TOTAL)	METALS	57	5	2	12.00	37.80	37.00	60.00
124	NICKEL (TOTAL)	METALS	4	28	8	15.00	528.71	230.00	2080.00
125	SELENIUM (TOTAL)	METALS	10	25	6	13.00	274.28	50.00	2000.00
126	SILVER (TOTAL)	METALS	17	9	4	15.00	62.67	40.00	170.00
127	THALLIUM (TOTAL)	METALS	4	7	3	15.00	47.86	50.00	70.00
128	ZINC (TOTAL)	METALS	2	50	12	50.00	580.68	325.00	2800.00
129	TETRACHLORODIBENZO-P-DIOXIN	BASE/NEUTRAL	1	0	0	10.00	10.00	10.00	10.00
999	TOTAL UNIQUE PLANTS		.	.	28	.	.	.	.

*N DET: Number of readings above 10 ppb.
N NOTDET: Number of readings at or below 10 ppb.
N PLANTS: Number of plants at which pollutant was detected above 10 ppb.

TABLE V-22

INFLUENT WASTEWATER CONCENTRATION SUMMARY STATISTICS
FOR THREE NOT PLASTICS-ONLY INDIRECT DISCHARGING PLANTS*

CHEMNUM	NAME	FRACTION	N NOTDET	N DET	N PLANTS	MINIMUM	MEAN	MEDIAN	MAXIMUM
2	ACROLEIN	VOLATILES	0	4	1	2500.00	18850.00	18450.00	36000.00
4	BENZENE	VOLATILES	4	3	1	14.00	44.33	59.00	60.00
23	CHLOROFORM	VOLATILES	3	0	0	10.00	10.00	10.00	10.00
38	ETHYLBENZENE	VOLATILES	3	4	1	28.00	45.75	45.00	65.00
55	NAPHTHALENE	BASE/NEUTRAL	0	4	1	40.00	988.75	157.50	3600.00
56	NITROBENZENE	BASE/NEUTRAL	2	0	0	10.00	10.00	10.00	10.00
57	2-NITROPHENOL	ACIDS	0	4	1	21.00	43.75	42.00	70.00
62	N-NITROSODIPHENYLAMINE	BASE/NEUTRAL	3	0	0	10.00	10.00	10.00	10.00
65	PHENOL	ACIDS	0	8	2	430.00	1353.75	1275.00	2700.00
66	BIS-(2-ETHYLHEXYL) PHTHALATE	BASE/NEUTRAL	3	0	0	10.00	10.00	10.00	10.00
68	DI-N-BUTYL PHTHALATE	BASE/NEUTRAL	4	0	0	10.00	10.00	10.00	10.00
70	DIETHYL PHTHALATE	BASE/NEUTRAL	2	2	1	490.00	715.00	715.00	940.00
86	TOLUENE	VOLATILES	0	8	2	55.00	2743.00	295.00	12000.00
107	PCB-1254 (AROCHLOR 1254).	PESTICIDES	2	0	0	10.00	10.00	10.00	10.00
114	ANTIMONY (TOTAL)	METALS	8	0	0	10.00	10.00	10.00	10.00
115	ARSENIC (TOTAL)	METALS	8	0	0	10.00	10.00	10.00	10.00
118	CADMIUM (TOTAL)	METALS	8	0	0	10.00	10.00	10.00	10.00
119	CHROMIUM (TOTAL)	METALS	0	16	3	21.00	906.69	240.00	2800.00
120	COPPER (TOTAL)	METALS	0	16	3	22.00	195.56	90.00	730.00
122	LEAD (TOTAL)	METALS	2	6	1	15.00	95.83	75.00	250.00
123	MERCURY (TOTAL)	METALS	11	4	1	22.00	270.50	80.00	900.00
124	NICKEL (TOTAL)	METALS	2	6	1	20.00	63.33	60.00	120.00
125	SELENIUM (TOTAL)	METALS	8	0	0	10.00	10.00	10.00	10.00
127	THALLIUM (TOTAL)	METALS	8	0	0	10.00	10.00	10.00	10.00
128	ZINC (TOTAL)	METALS	0	12	2	80.00	549.17	595.00	1100.00
999	TOTAL UNIQUE PLANTS		.	.	3	.	.	.	.

*N DET: Number of readings above 10 ppb.
N NOTDET: Number of readings at or below 10 ppb.
N PLANTS: Number of plants at which pollutant was detected above 10 ppb.

TABLE V-23

INFLUENT WASTEWATER CONCENTRATION SUMMARY STATISTICS
FOR THREE PLASTICS-ONLY DIRECT DISCHARGING PLANTS*

CHEMNUM	NAME	FRACTION	N NOTDET	N DET	N PLANTS	MINIMUM	MEAN	MEDIAN	MAXIMUM
2	ACROLEIN	VOLATILES	2	2	1	82.00	1841.00	1841.00	3600.00
3	ACRYLONITRILE	VOLATILES	0	9	2	1200.00	19608.89	21310.00	36990.00
4	BENZENE	VOLATILES	4	0	0	10.00	10.00	10.00	10.00
6	CARBON TETRACHLORIDE	VOLATILES	2	0	0	10.00	10.00	10.00	10.00
7	CHLOROBENZENE	VOLATILES	4	0	0	10.00	10.00	10.00	10.00
13	1,1-DICHLOROETHANE	VOLATILES	2	0	0	10.00	10.00	10.00	10.00
22	4-CHLORO-M-CRESOL	ACIDS	4	0	0	10.00	10.00	10.00	10.00
23	CHLOROFORM	VOLATILES	4	0	0	10.00	10.00	10.00	10.00
38	ETHYLBENZENE	VOLATILES	4	4	1	2158.00	2893.75	2794.00	3829.00
44	METHYLENE CHLORIDE	VOLATILES	3	0	0	10.00	10.00	10.00	10.00
48	DICHLOROBROMOMETHANE	VOLATILES	2	0	0	10.00	10.00	10.00	10.00
49	TRICHLOROFLUOROMETHANE	VOLATILES	2	0	0	10.00	10.00	10.00	10.00
65	PHENOL	ACIDS	5	6	2	11.00	48.17	62.50	70.00
66	BIS-(2-ETHYLHEXYL) PHTHALATE	BASE/NEUTRAL	3	6	2	30.00	75.33	42.00	161.00
85	TETRACHLOROETHYLENE	VOLATILES	3	0	0	10.00	10.00	10.00	10.00
86	TOLUENE	VOLATILES	4	0	0	10.00	10.00	10.00	10.00
88	VINYL CHLORIDE	VOLATILES	0	7	1	97.00	924.14	460.00	2500.00
115	ARSENIC (TOTAL)	METALS	3	0	0	10.00	10.00	10.00	10.00
118	CADMIUM (TOTAL)	METALS	1	2	1	28.00	34.00	34.00	40.00
119	CHROMIUM (TOTAL)	METALS	0	9	3	11.00	130.78	120.00	290.00
120	COPPER (TOTAL)	METALS	0	6	2	41.00	88.33	83.00	163.00
121	CYANIDE (TOTAL)	METALS	0	6	2	20.00	51.33	41.00	130.00
122	LEAD (TOTAL)	METALS	0	9	3	20.00	122.67	38.00	540.00
123	MERCURY (TOTAL)	METALS	3	0	0	10.00	10.00	10.00	10.00
125	SELENIUM (TOTAL)	METALS	6	0	0	10.00	10.00	10.00	10.00
128	ZINC (TOTAL)	METALS	0	3	1	162000.00	325666.67	365000.00	450000.00
999	TOTAL UNIQUE PLANTS		.	.	3	.	.	.	.

*N DET: Number of readings above 10 ppb.
N NOTDET: Number of readings at or below 10 ppb.
N PLANTS: Number of plants at which pollutant was detected above 10 ppb.

statistics (minimum, mean, median, maximum) presented in Tables V-21 through V-23, except where all values were below 10 ppb.

Even when split- or multiple samples were taken during one day, each daily value (a single reading or an average of several single readings) counted as one observation for this summary. Not averaging the results from split samples would have improperly biased the data by weighting split samples more than samples that had not been split. The maxima and minima shown are the highest and lowest (respectively) daily values observed at any plant.

Waste Loadings for the Entire OCPSF Industrial Category. The Agency estimated raw, current, projected BPT effluent, and projected PSES effluent and projected BAT effluent priority pollutant waste loadings for the entire OCPSF industrial category using data developed as part of the Regulatory Impact Analysis of these proposed regulations. These data are presented in the February 18, 1983, draft report from EPA's Office of Water Regulations and Standards, Monitoring and Data Support Division (MDSD), entitled "Summary of Priority Pollutant Loadings for the Organic Chemicals, Plastics, and Synthetics Industry." The methodology used for developing the estimated waste loads from the data in the MDSD draft report is described below.

The MDSD draft report estimated the total industry-wide raw, current, projected BPT, projected PSES, and projected BAT effluent waste loadings and flow for the 176 product/processes discussed in Section IV and Appendix G of this BAT Development Document. The Agency extrapolated these loadings according to flow to cover all the product/processes comprising OCPSF production, as follows: the MDSD flow estimates for the 176 product/processes were 222.4 MGD for direct dischargers and 96.6 MGD for indirect dischargers. Assuming 520 direct dischargers at 2.31 MGD each, total industry direct discharge flow is 1,201.2 MGD. Assuming 468 indirect dischargers at 0.80 MGD each, total industry indirect discharge flow is 374.4 MGD. The direct waste loads for the total industry were estimated by multiplying the MDSD waste loads for the 176 product/processes by 1201.2/222.4 = 5.40. The indirect waste loads for the total industry were estimated by multiplying the MDSD waste loads for the 176 product/processes by 374.4/96.6 = 3.88.

The results of these calculations are presented in Section IX (BAT) for direct dischargers and Section XI (PSES) for indirect dischargers.

REFERENCES

DONALDSON, W.T. 1977. Identification and measurement of trace organics in water: an overview. Env. Sci. and Tech. 11:348. April 1977

HOLIDAY, A.D. 1982. Conserving and reusing water. Chemical Engineering 89:118-737.

McGOVERN, J.G. 1973. Inplant wastewater control. Chemical Engineering 80:137-139.

U.S. BUREAU OF THE CENSUS. 1981. 1977 Census of Manufacturers. Volume I: Subject Statistics. U.S. Department of Commerce, Washington, D.C.

U.S. ENVIRONMENTAL PROTECTION AGENCY. 1979. Toxic Pollutant Identification: Catalog of Organic Chemical Industries Unit Processes. EPA-IMPQCE Series 01/79-06

WISE, H.E. and FAHRENTHOLD, P.D. 1981a. Symposium on Treatability of Industrial Aqueous Effluents. Presented in part at the 181st National meeting of the American Chemical Society, Division of Industrial Engineering Chemistry. Atlanta, Ga., March 29-April 3, 1981

WISE, H.E. and FAHRENTHOLD, P.D. 1981b. Predicting priority pollutants from petrochemical processes. Env. Sci. and Tech. 15:1292-1304. November 1981

SECTION VI

SELECTION OF POLLUTANT PARAMETERS

INTRODUCTION

The Agency has addressed two classes of pollutants for the BAT, NSPS, PSES, and PSNS regulations in this document: the 126 priority pollutants and those nonconventional pollutants which are found in the wastewaters of the Organic Chemicals and Plastics/Synthetic Fibers (OCPSF) Industries. As the list of 65 toxic pollutants and classes of pollutants designated in the Clean Water Act includes potentially thousands of specific pollutants, EPA limited its data collection efforts to the 126 specific compounds referred to as "priority" pollutants. The criteria that were used in the late 1970's to classify these pollutants as "priority" pollutants included the frequency of their occurrence in water, their chemical stability and structure, the amount of the chemical produced, and the availability of chemical standards for measurement.

While sampling wastewaters to develop regulations on the OCPSF Industries, EPA collected data at some facilities on specific nonconventional parameters such as COD and TOC. Conventional pollutants (five-day biochemical oxygen demand (BOD), total suspended solids (TSS), pH, and oil and grease) have been considered in the development of the proposed BPT and BCT effluent limitations for the OCPSF industries, and accordingly, are not addressed in this section.

In order to determine the presence and significance of nonconventional and toxic pollutants in the wastewaters of the Organic Chemicals and Plastics/Synthetic Fibers Industries, data have been compiled and reviewed from (1) industry 308 questionnaires, (2) the screening, verification, and the CMA Five-Plant Study sampling efforts, (3) literature studies, and (4) product/process chemistry considerations. This chapter discusses how these data were used to determine which pollutant parameters are found in the wastewaters of direct and indirect dischargers and describes the selection criteria used to select pollutants for regulation under BAT, NSPS, PSNS, and PSES. Each pollutant has been evaluated to: (1) consider the pollutant for proposed regulation, (2) exclude the pollutant under Paragraph 8(a) of the Revised Settlement Agreement, or (3) defer regulation because of inadequate data.

SELECTION RATIONALE FOR BAT AND NSPS POLLUTANTS

General

Specific nonconventional and toxic wastewater parameters determined to be significant in the Organic Chemicals and Plastics/Synthetic Fibers Industries have been considered for regulation. Nonconventional pollutant parameters commonly found in significant quantities in OCPSF wastewaters include chemical oxygen demand (COD), total organic carbon (TOC), and ammonia nitrogen. In

addition to these pollutants, certain other nonconventional pollutants known to have toxic properties, such as formaldehyde or methylene dianiline, have been found in some OCPSF industries wastewaters. While EPA has not run analyses for most of these nonconventional compounds in OCPSF wastewaters, product/process chemistry implies that they are present in OCPSF wastewaters. All of the 126 priority pollutants have been considered for potential regulation -- including 28 volatile organic compounds, 47 base/neutral extractable organic compounds, 11 acid extractable organic compounds, 18 pesticides, 7 PCB's, and 15 metals.

Selection Criteria

Nonconventional and Toxic Non-Priority Pollutants. While the Agency had considered proposing regulations for specific nonconventional pollutants, EPA has determined that additional technical data is required to complete its analysis. Therefore, BAT regulation of nonconventional pollutants has been deferred.

The proposed regulations do not address toxic pollutants other than those listed as priority pollutants. The enormity of the task of developing analytical methods and treatment data for the priority pollutants alone precluded study of other toxic pollutants. The installation and proper operation of treatment equipment to meet BPT and BAT limitations will result, however, in significant reductions of non-priority and nonconventional pollutants.

Priority Pollutants. Paragraph 8 of the Settlement Agreement contains provisions authorizing EPA to exclude toxic pollutants and industry subcategories from regulation under certain circumstances. Paragraph 8(a)(iii) authorizes the Administrator to exclude from regulation: toxic pollutants not detectable by Section 304(h) analytical methods or other state-of-the-art methods; toxic pollutants present in amounts too small to be effectively reduced by available technologies; toxic pollutants present only in trace amounts and neither causing nor likely to cause toxic effects; toxic pollutants detected in the effluent from only a small number of sources within a subcategory and uniquely related to only those sources; toxic pollutants that will be effectively controlled by the technologies upon which are based other effluent limitations and standards; or toxic pollutants for which more stringent protection is already provided under Section 307(a) of the Act.

Pursuant to these criteria, the Agency has chosen to eliminate from further consideration the 18 pesticides which are priority pollutants (see TABLE VI-1). The priority pollutants proposed for exclusion are pesticides which are not produced as products or co-products and are unlikely to appear as raw material contaminants in OCPSF product/processes. At manufacturing facilities consisting predominantly of OCPSF product/processes, but where these pesticide pollutants are intentionally synthesized by product/processes in SIC codes corresponding to the pesticides category, pesticide discharges will be regulated under effluent limitations for the separate pesticides category. On occasion, pesticides may appear in discharges that contain OCPSF effluents only. This results from the application of pesticide formulations around the plant grounds.

TABLE VI-1

EIGHTEEN TOXIC POLLUTANTS
PROPOSED FOR EXCLUSION

Aldrin
Dieldrin
Chlordane
4,4'-DDT
4,4'-DDE
4,4'-DDD
alpha-Endosulfan
beta-Endosulfan
Endosulfansulfate
Endrin
Endrin aldehyde
Heptachlor
Heptachlor epoxide
alpha-BHC
beta-BHC
gamma-BHC
delta-BHC
Toxaphene

The data on the remaining 108 priority pollutants considered for regulation have been evaluated using the following two criteria:

(1) Was the pollutant ever detected in influent OCPSF wastewaters during industry-wide sampling?

(2) What is the frequency of occurrence of each pollutant? Was it detected at enough plants to merit national regulation?

All of the 108 pollutants currently under consideration for regulation were detected in influent OCPSF wastewaters during the EPA's Effluent Guidelines Division Organic Chemicals Branch Screening, Verification, and CMA studies. These programs are described in Section V. As shown in TABLE VI-2, each of these pollutants was detected in the wastewaters influent to end-of-pipe treatment systems from at least 42 percent of the plants sampled. Therefore, all of the pollutants under consideration satisfied both selection criteria. The database used for Table VI-2 includes 149 plants, including 85 Screen Phase I plants, 36 Screening Phase II plants, 31 Verification plants, and five CMA plants. Overlaps were as follows: six plants were part of the Screening and Verification studies; one plant was part of the Screening and CMA studies; two plants were part of the Verification and CMA studies; and one plant was part of all three studies. Of these data points, 76 plants are direct dischargers, 42 plants are indirect dischargers, and the discharge mode for the remaining 30 plants is unknown.

Pollutant Parameters Selected

Also presented in Table VI-2 is the range of concentrations (minimum and maximum values) at which these pollutants were detected in the influent wastewaters sampled during the Verification and CMA studies. While EPA considered eliminating from regulation those pollutants that had been found during the Verification and CMA studies in the raw wastewater at low concentrations (e.g., maximum influent value detected was less than the lowest reported concentration for chronic toxicity in freshwater species), the Agency has chosen to defer the use of any such criteria. The Agency, therefore, considers all the 108 priority pollutants in Table VI-2 to be candidates for BAT regulation. The fate of these priority pollutants in aquatic environments is discussed in USEPA (1979). Appendix H to this report presents a description of the toxic human health and environmental effects associated with each of the 108 priority pollutants. Section IX describes the derivation of numerical BAT limitations for direct dischargers.

SELECTION RATIONALE FOR PSES AND PSNS POLLUTANTS

General

As discussed in Section XI, Pretreatment Standards of Existing Sources (PSES) and Pretreatment Standards for New Sources (PSNS) for direct dischargers need only address those pollutants which upset, inhibit, pass-through, or contaminate sludges at POTWs. The Agency has assumed for purposes of this analysis and based upon the available data, that within each subcategory, the raw wastewaters at indirect discharging OCPSF plants are not significantly

TABLE VI-2

FREQUENCY OF OCCURRENCE AND CONCENTRATION RANGES
FOR SELECTED PRIORITY POLLUTANTS
IN INFLUENT WASTEWATERS

PRIORITY POLLUTANT	FRACTION	PERCENT PLANTS DETECTED(a)	MINIMUM (b) (µg/l)	MAXIMUM (b) (µg/l)
ACENAPHTHENE	BASE/NEUTRAL	61.1650	4.6150	9600.0000
ACROLEIN	VOLATILES	50.0000	82.0000	36000.0000
ACRYLONITRILE	VOLATILES	57.6923	5.0000	890000.0000
BENZENE	VOLATILES	86.6667	3.4800	390000.0000
BENZIDINE	BASE/NEUTRAL	45.4545	<10.0000	<10.0000
CARBON TETRACHLORIDE	VOLATILES	66.6667	1.0000	45000.0000
CHLOROBENZENE	VOLATILES	66.6667	1.0000	7200.0000
1,2,4-TRICHLOROBENZENE	BASE/NEUTRAL	44.5545	<10.0000	550.0000
HEXACHLOROBENZENE	BASE/NEUTRAL	47.4747	<10.0000	52.0000
1,2-DICHLOROETHANE	VOLATILES	59.6154	1.0000	100000.0000
1,1,1-TRICHLOROETHANE	VOLATILES	70.1923	1.0000	20000.0000
HEXACHLOROETHANE	BASE/NEUTRAL	47.9592	<10.0000	3400.0000
1,1-DICHLOROETHANE	VOLATILES	55.0000	1.0000	1200.0000
1,1,2-TRICHLOROETHANE	VOLATILES	55.6701	4.0000	1700.0000
1,1,2,2-TETRACHLOROETHANE	VOLATILES	52.9412	7.0000	1100.0000
CHLOROETHANE	VOLATILES	51.5464	2.0000	1563.0000
BIS (2-CHLOROETHYL) ETHER	BASE/NEUTRAL	46.5347	2800.0000	2800.0000
2-CHLOROETHYLVINYL ETHER	VOLATILES	45.6522	<10.0000	<10.0000
2-CHLORONAPHTHALENE	BASE/NEUTRAL	44.8980	<10.0000	<10.0000
2,4,6-TRICHLOROPHENOL	ACIDS	59.4340	2.0000	1449.0000
4-CHLORO-M-CRESOL	ACIDS	46.0000	2.0000	<10.0000
CHLOROFORM	VOLATILES	87.8049	1.0000	6600.0000
2-CHLOROPHENOL	ACIDS	57.5472	1.0000	15540.0000
1,2-DICHLOROBENZENE	BASE/NEUTRAL	50.9615	2.1000	4350.0000
1,3-DICHLOROBENZENE	BASE/NEUTRAL	47.0000	<10.0000	<10.0000
1,4-DICHLOROBENZENE	BASE/NEUTRAL	51.0000	<10.0000	<10.0000
3,3-DICHLOROBENZIDINE	BASE/NEUTRAL	43.8776	<10.0000	<10.0000
1,1-DICHLOROETHYLENE	VOLATILES	62.2449	2.0000	9100.0000
1,2-TRANSDICHLOROETHYLENE	VOLATILES	58.5859	5.0000	38000.0000
2,4-DICHLOROPHENOL	ACIDS	59.8131	1.5000	890.0000
1,2-DICHLOROPROPANE	VOLATILES	51.0204	8.0000	14000.0000
1,3-DICHLOROPROPYLENE	VOLATILES	51.0000	<10.0000	8700.0000
2,4-DIMETHYLPHENOL	ACIDS	63.4615	1.9000	19000.0000
2,4-DINITROTOLUENE	BASE/NEUTRAL	47.4747	<10.0000	18000.0000
2,6-DINITROTOLUENE	BASE/NEUTRAL	50.0000	<10.0000	4750.0000
1,2-DIPHENYLHYDRAZINE	BASE/NEUTRAL	50.0000	<10.0000	<10.0000
ETHYLBENZENE	VOLATILES	79.6610	<10.0000	120000.0000
FLUORANTHENE	BASE/NEUTRAL	57.5472	1.0000	7900.0000
4-CHLOROPHENYLPHENYL ETHER	BASE/NEUTRAL	42.8571	<10.0000	<10.0000
4-BROMOPHENYLPHENYL ETHER	BASE/NEUTRAL	43.4343	<10.0000	<10.0000
BIS-(2-CHLOROISOPROPYL) ETHER	BASE/NEUTRAL	47.5248	520.0000	9300.0000
BIS-(2-CHLOROETHOXY) METHANE	BASE/NEUTRAL	44.3299	<10.0000	<10.0000

TABLE VI-2 (continued)

PRIORITY POLLUTANT	FRACTION	PERCENT PLANTS DETECTED(a)	MINIMUM (b) (µg/l)	MAXIMUM (b) (µg/l)
METHYLENE CHLORIDE	VOLATILES	86.6667	1.0000	29000.0000
METHYL CHLORIDE	VOLATILES	52.1277	<10.0000	30.0000
METHYL BROMIDE	VOLATILES	48.3516	<10.0000	1000.0000
BROMOFORM	VOLATILES	50.0000	<10.0000	120.0000
DICHLOROBROMOMETHANE	VOLATILES	58.6538	0.2000	250.0000
CHLORODIBROMOMETHANE	VOLATILES	49.4949	1.0000	21.0000
HEXACHLOROBUTADIENE	BASE/NEUTRAL	43.4343	<10.0000	170.0000
HEXACHLOROCYCLOPENTADIENE	BASE/NEUTRAL	43.0000	<10.0000	<10.0000
ISOPHORONE	BASE/NEUTRAL	47.4747	<10.0000	650.0000
NAPHTHALENE	BASE/NEUTRAL	64.5455	7.0000	7849.0000
NITROBENZENE	BASE/NEUTRAL	51.4851	5.0000	98000.0000
2-NITROPHENOL	ACIDS	51.9231	2.2000	38000.0000
4-NITROPHENOL	ACIDS	51.4850	<10.0000	1900.0000
2,4-DINITROPHENOL	ACIDS	46.0784	<10.0000	3900.0000
4,6-DINITRO-O-CRESOL	ACIDS	44.0000	<10.0000	<10.0000
N-NITROSODIMETHYLAMINE	BASE/NEUTRAL	42.3913	<10.0000	<10.0000
N-NITROSODIPHENYLAMINE	BASE/NEUTRAL	50.0000	5.0000	<10.0000
N-NITROSODI-N-PROPYLAMINE	BASE/NEUTRAL	45.3608	<10.0000	<10.0000
PENTACHLOROPHENOL	ACIDS	57.6923	1.0000	6800.0000
PHENOL	ACIDS	94.0299	0.5000	250000.0000
BIS-(2-ETHYLHEXYL) PHTHALATE	BASE/NEUTRAL	86.7769	0.6500	33000.0000
BUTYLBENZYL PHTHALATE	BASE/NEUTRAL	59.2233	<10.0000	<10.0000
DI-N-BUTYL PHTHALATE	BASE/NEUTRAL	81.1321	3.0000	6300.0000
DI-N-OCTYL PHTHALATE	BASE/NEUTRAL	55.0000	4.3000	94.0000
DIETHYL PHTHALATE	BASE/NEUTRAL	70.2970	1.0000	15000.0000
DIMETHYL PHTHALATE	BASE/NEUTRAL	60.5769	2.0000	1470.0000
BENZO(A)ANTHRACENE	BASE/NEUTRAL	53.5354	0.6100	2400.0000
BENZO(A)PYRENE	BASE/NEUTRAL	51.0204	4.0000	44.0000
3,4-BENZOFLUORANTHENE	BASE/NEUTRAL	45.9184	3.0000	34.0000
BENZO(K)FLUORANTHENE	BASE/NEUTRAL	47.4227	6.0000	12.0000
CHRYSENE	BASE/NEUTRAL	55.0000	1.3000	1900.0000
ACENAPHTHYLENE	BASE/NEUTRAL	54.7170	4.6150	22000.0000
ANTHRACENE	BASE/NEUTRAL	64.7059	0.5100	3300.0000
BENZO(GHI)PERYLENE	BASE/NEUTRAL	47.5248	1.0000	12.2000
FLUORENE	BASE/NEUTRAL	60.0000	3.4000	973.0000
PHENANTHRENE	BASE/NEUTRAL	60.5769	2.4000	13000.0000
DIBENZO(A,H)ANTHRACENE	BASE/NEUTRAL	46.4646	<10.0000	16.5714
INDENO(1,2,3-C,D)PYRENE	BASE/NEUTRAL	46.5347	1.0000	12.2000
PYRENE	BASE/NEUTRAL	59.8131	1.0000	6100.0000
TETRACHLOROETHYLENE	VOLATILES	75.7282	1.0000	32000.0000
TOLUENE	VOLATILES	91.0569	<10.0000	160000.0000
TRICHLOROETHYLENE	VOLATILES	71.9626	1.0000	9000.0000
VINYL CHLORIDE	VOLATILES	50.0000	5.0000	31900.0000
PCB-1242 (AROCHLOR 1242)	PESTICIDES	46.465	1.2000	4.0000

TABLE VI-2 (concluded)

PRIORITY POLLUTANT	FRACTION	PERCENT PLANTS DETECTED(a)	MINIMUM (b) (µg/l)	MAXIMUM (b) (µg/l)
PCB-1254 (AROCHLOR 1254)	PESTICIDES	48.980	(d)	(d)
PCB-1221 (AROCHLOR 1221)	PESTICIDES	46.392	(d)	(d)
PCB-1232 (AROCHLOR 1232)	PESTICIDES	47.423	(c)	(c)
PCB-1248 (AROCHLOR 1248)	PESTICIDES	48.454	12.0000	12.0000
PCB-1260 (AROCHLOR 1260)	PESTICIDES	46.875	(c)	(c)
PCB-1016 (AROCHLOR 1016)	PESTICIDES	47.423	(c)	(c)
ANTIMONY (TOTAL)	METALS	100.000	2.0000	630.0000
ARSENIC (TOTAL)	METALS	100.000	1.0000	1300.0000
BERYLLIUM (TOTAL)	METALS	100.000	20.0000	50.0000
CADMIUM (TOTAL)	METALS	99.138	1.0000	40.0000
CHROMIUM (TOTAL)	METALS	100.000	6.0000	6400.0000
COPPER (TOTAL)	METALS	100.000	5.0000	9710.0000
CYANIDE (TOTAL)	METALS	98.276	<10.0000	200000.0000
LEAD (TOTAL)	METALS	99.160	1.0000	1100.0000
MERCURY (TOTAL)	METALS	100.000	0.1000	900.0000
NICKEL (TOTAL)	METALS	100.000	8.0000	2080.0000
SELENIUM (TOTAL)	METALS	100.000	1.0000	2000.0000
SILVER (TOTAL)	METALS	99.123	3.0000	170.0000
THALLIUM (TOTAL)	METALS	99.074	1.0000	70.0000
ZINC (TOTAL)	METALS	100.000	1.0000	450000.0000

(a) From Screening (Phase I and Phase II), CMA, and Verification Summary Statistics

(b) From CMA and Verification study GC/MS data only

(c) Analyses were not performed for these pollutants during the CMA and Verification studies.

(d) Pollutants were sampled and analyzed for in the Verification Study, but were never detected.

different from those at direct discharging OCPSF plants. In selecting pollutants to regulate for pretreatment standards, therefore, only those 108 priority pollutants that the Agency considers as candidates for BAT regulation are addressed. For each OCPSF subcategory (See Section IV), the Agency evaluated data on removal of these pollutants at POTWs and at industrial treatment plants meeting BAT, to establish which pollutants pass through POTWs. Pollutants found not to pass through were eliminated from consideration for regulation under PSES and PSNS. The remaining pollutants were then selected as candidates for regulation. The procedure used for the pass-through analysis is described below.

Pass-Through Analysis

General. In developing categorical pretreatment standards, EPA evaluated the percentage of a pollutant removed by POTWs with the percentage removed by direct dischargers applying BAT. A pollutant is deemed to pass through the POTW where the average percentage removed nationwide by well-operated POTWs is less than the percentage removed by direct dischargers with well operated treatment systems.

For POTW removals, the Agency used the median POTW removal efficiencies from the 50 POTW Study (see Appendix I). For each pollutant, the median POTW removal efficiencies were compared to median plant removal efficiencies derived from Verification and CMA Study plants that achieve either 95 percent BOD removal or an effluent BOD less than or equal to 50 mg/l. In some instances, the removal of organic pollutants may be understated because of the location of the influent sampling point prior to end-of-pipe treatment. The data excludes, in such cases, reductions due to removals across in-plant treatment systems.

In light of the analytical variability associated with organic pollutants at low concentrations in OCPSF and POTW wastewaters however, and the fact that EPA had less data in the POTWs studies on organic priority pollutants than it has for the metals, EPA believes that differences of five percent or less between the OCPSF and POTW data for organic priority pollutant reduction may not reflect real differences in treatment efficiency. Therefore, EPA has determined that pass-through of organic priority pollutants occurs when the removal is at least five percentage points greater than the removal at a POTW. Where adequate 50 POTW Study removal data were not available for a particular pollutant (see TABLE VI-4), the pollutant was included for regulation under PSES and PSNS.

Database and Methodology. The final BAT database included 21 direct dischargers; four of the plants were in the CMA Study and 19 were in the Verification Study (two plants were in both). Nineteen of the plants employ biological treatment, while two Verification plants use only physical-chemical treatment. This OCPSF BAT database includes removal data for 70 priority pollutants from Not Plastics-Only plants and for 12 priority pollutants from Plastics-Only plants.

In calculating median removals for the OCPSF plants, influent-effluent data pairs were deleted if the influent value was less than or equal to 10 ppb. All remaining effluent values less than 10 ppb were changed to 10 ppb (to minimize analytical concerns) and only pairs showing positive removals were used. A level of 10 ppb was considered the level of analytical detectability. For each plant, mean influent and effluent values were calculated and the plant removal efficiency was calculated from these two means. For each pollutant, the plant removals were ordered and the removal efficiency of the median plant was then determined.

In calculating median removals for the 50 POTW Study plants, influent-effluent data pairs were deleted if the influent value was less than or equal to 20 ppb, and only pairs showing positive removals were used. Effluent values less than 10 ppb or not detected were reported as 10 ppb in the POTW study. The removals for all daily influent-effluent pairs from all POTWs were ordered and the median percent removal was determined and compared to the BAT removals. It should be recognized that the 50 POTW Study database and the OCPSF database were analyzed in separate efforts which utilized different editing rules for determining the median percent removals. TABLES VI-3 and VI-4 list the median percent removals for each pollutant parameter derived in this fashion from the OCPSF and 50 POTW Study databases for the Plastics-Only and Not Plastics-Only subcategories, respectively.

Pollutant Parameters Selected

TABLE VI-5 lists the six pollutants in the Plastics-Only subcategory and the 29 pollutants in the Not Plastics-Only subcategory selected as candidates for regulation under PSES and PSNS on the basis of pass-through. The derivation of numerical PSES and PSNS limitations for these pollutants is described in Section XI.

TABLE VI-6 lists by subcategory those pollutants which are not proposed for regulation on the basis of pass-through, since the preceding analysis documents that they do not pass-through POTWS (see Section XI for discussion of interference). Consideration of the remaining priority pollutants in Table VI-2 for PSES and PSNS regulation is deferred pending the collection of additional data.

TABLE VI-3

RESULTS OF PRETREATMENT PASS-THROUGH ANALYSIS
PLASTICS-ONLY PLANTS

FRACTION	POLLUTANT NAME	PERCENT REMOVAL BAT	PERCENT REMOVAL POTW	DIFFERENCE(a)
ACID	Phenol	84.04	97.81	-14
BASE/NEUTRAL	Bis(2-Ethylhexyl) Phthalate	77.88	76.19	+ 2
VOLATILE	Vinyl Chloride	96.48	88.97	+ 8
	Ethylbenzene	99.64	95.00	+ 5
	Acrolein	99.45	*	-
	Acrylonitrile	99.53	*	-
METALS	Zinc (Total)	98.99	76.04	+25
	Cyanide (Total)	81.07	68.61	+12
	Lead (Total)	67.47	58.59	+ 9
	Cadmium (Total)	69.64	90.91	-21
	Chromium (Total)	56.24	77.83	-22
	Copper (Total)	54.69	85.00	-30

(a) Difference = (BAT Removal) - (POTW Removal)

* Sampling data not available.

TABLE VI-4

RESULTS OF PRETREATMENT PASS-THROUGH ANALYSIS
NOT PLASTICS-ONLY PLANTS

FRACTION	POLLUTANT NAME	PERCENT REMOVAL BAT	PERCENT REMOVAL POTW	DIFFERENCE(a)
ACID	2,4-Dichlorophenol	97.51	60.67	+37
	2,4-Dimethylphenol	80.32	53.27	+27
	Phenol	97.56	97.81	-.3
	Pentachlorophenol	33.26	44.98	-12
	2-Chlorophenol	86.56	*	-
	2,4-Dinitrophenol	76.51	*	-
	2-Nitrophenol	98.22	*	-
	4-Nitrophenol	41.68	*	-
	2,4,6-Trichlorophenol	55.14	*	-
BASE NEUTRAL	Isophorone	96.97	56.52	+40
	Dimethyl Phthalate	67.22	55.88	+11
	Fluoranthene	78.53	73.02	+ 6
	Naphthalene	90.49	89.66	+ 1
	Diethyl Phthalate	87.50	88.70	- 1
	Pyrene	77.78	80.00	- 2
	Anthracene	87.52	90.43	- 3
	Di-n-Butyl Phthalate	84.66	89.93	- 5
	Bis(2-Ethylhexyl) Phthalate	64.88	76.19	-11
	Acenaphthene	82.30	95.00	-13
	Di-n-Octyl Phthalate	51.54	67.19	-16
	1,2-Dichlorobenzene	74.77	93.06	-18
	1,2,4-Trichlorobenzene	75.48	93.00	-18
	Acenaphthylene	87.70	*	-
	Benzo(a)Anthracene	16.87	*	-
	Bis(2-Chloroisopropyl) Ether	42.84	*	-
	Benzo(a)Pyrene	43.87	*	-
	2,4-Dinitrotoluene	88.40	*	-
	2,6-Dinitrotoluene	93.15	*	-
	Fluorene	46.49	*	-
	Nitrobenzene	99.84	*	-
	Phenanthrene	70.09	*	-

TABLE VI-4 (concluded)

FRACTION	POLLUTANT NAME	PERCENT REMOVAL BAT	PERCENT REMOVAL POTW	DIFFERENCE(a)
METAL	Chromium (Total)	83.48	77.83	+ 6
	Mercury (Total)	66.04	60.00	+ 6
	Cyanide (Total)	67.21	68.61	- 1
	Zinc (Total)	74.96	76.04	- 1
	Arsenic (Total)	31.45	38.89	- 7
	Lead (Total)	48.64	58.59	-10
	Nickel (Total)	24.70	45.51	-21
	Copper (Total)	54.95	85.00	-30
	Antimony (Total)	30.19	66.18	-36
	Silver (Total)	39.58	90.00	-50
	Cadmium (Total)	16.67	90.91	-74
	Beryllium (Total)	25.00	*	-
	Selenium (Total)	26.31	*	-
	Thallium (Total)	12.50	*	-
VOLATILE	Methyl Bromide	99.00	81.82	+17
	1,2-Dichloroethane	95.19	87.81	+ 7
	1,1-Dichloroethane	91.55	86.90	+ 5
	Ethylbenzene	97.58	95.00	+ 3
	1,1,2,2-Tetrachloroethane	94.69	91.67	+ 3
	Toluene	99.68	96.55	+ 3
	Benzene	99.27	97.65	+ 2
	1,1-Dichloroethylene	86.66	84.41	+ 2
	Methylene Chloride	66.72	70.90	- 4
	Dichlorobromomethane	62.17	71.36	- 9
	1,3-Dichloropropylene	84.93	99.00	-14
	1,1,1-Trichloroethane	74.47	90.91	-16
	Chloroform	63.95	82.73	-19
	1,2-Dichloropropane	74.59	94.30	-20
	Methyl Chloride	66.67	89.58	-23
	Carbon Tetrachloride	64.81	91.38	-27
	1,2-Trans-Dichloroethylene	53.72	94.87	-41
	Trichloroethylene	49.77	95.00	-45
	Chlorobenzene	50.82	98.36	-48
	Tetrachloroethylene	40.78	89.80	-49
	1,1,2-Trichloroethane	35.32	88.89	-54
	Vinyl Chloride	16.67	88.97	-72
	Acrylonitrile	99.81	*	-
	Chlorodibromomethane	31.70	*	-
	Chloroethane	65.98	*	-

* Sampling data not available.
(a) Difference = (BAT Removal) - (POTW Removal)

TABLE VI-5

POLLUTANTS SELECTED AS CANDIDATES FOR REGULATION
UNDER PSES AND PSNS

PLASTICS-ONLY

Acrolein	Lead
Acrylonitrile	Vinyl Chloride
Cyanide	Zinc

NOT PLASTICS-ONLY

Acenaphthylene	2,4-Dinitrotoluene
Acrylonitrile	2,6-Dinitrotoluene
Benzo(a)Anthracene	Fluoranthene
Benzo(a)Pyrene	Fluorene
Beryllium	Isophorone
Bis(2-Chloroisopropyl) Ether	Mercury
Chlorodibromomethane	Methyl Bromide
Chloroethane	Nitrobenzene
2-Chlorophenol	2-Nitrophenol
Chromium	4-Nitrophenol
1,2-Dichloroethane	Phenanthrene
2,4-Dichlorophenol	Selenium
Dimethyl Phthalate	Thallium
2,4-Dimethylphenol	2,4,6-Trichlorophenol
2,4-Dinitrophenol	

TABLE VI-6

POLLUTANTS EXCLUDED FROM REGULATION
UNDER PSES AND PSNS

PLASTICS-ONLY

Bis(2-Ethylhexyl) Phthalate	Copper
Cadmium	Ethylbenzene
Chromium	Phenol

NOT PLASTICS-ONLY

Acenaphthene	1,2-Dichlorobenzene	Pentachlorophenol
Anthracene	Dichlorobromomethane	Phenol
Antimony	1,1-Dichloroethylene	Pyrene
Arsenic	1,2-Trans-Dichloroethylene	Silver
Benzene	1,2-Dichloropropane	1,1,2,2-Tetrachloroethane
Bis(2-Ethylhexyl) Phthalate	1,3-Dichloropropylene	Tetrachloroethylene
Cadmium	Diethyl Phthalate	Toluene
Carbon Tetrachloride	Ethylbenzene	1,2,4-Trichlorobenzene
Chlorobenzene	Lead	1,1,2-Trichloroethane
Chloroform	Methyl Chloride	1,1,1-Trichloroethane
Copper	Methylene Chloride	Trichloroethylene
Cyanide	Naphthalene	Vinyl Chloride
Di-n-Butyl Phthalate	Nickel	Zinc
Di-n-Octyl Phthalate		

REFERENCES

U.S. ENVIRONMENTAL PROTECTION AGENCY (USEPA). 1979. Water Related Environmental Fate of 129 Priority Pollutants. Vol. II. Monitoring and Data Support Division, Office of Water Planning and Standards, Report No. EPA-440/4-79-0296

SECTION VII

POLLUTANT CONTROL AND TREATMENT TECHNOLOGY

INTRODUCTION

A variety of physical, chemical and biological treatment processes are in use or available for manufacturing plants in the Organic Chemicals and Plastics/Synthetic Fibers (OCPSF) category to control and treat both the pollutants of concern in the wastewaters (identified in Section VI) and the solid residues (sludges) produced by treating the wastewaters. This chapter identifies and describes in-plant and end-of-pipe control and treatment technologies that may be applied to OCPSF wastewaters to remove pollutants, especially the priority toxic pollutants listed in Section VI.

This chapter first discusses in-plant source controls, in-plant treatment technologies, end-of-pipe treatment and disposal technologies, and sludge treatment and disposal technologies. The final section summarizes the applicability and performance of the treatment technologies.

The specific technologies discussed in this chapter have been considered for application to the industry in general. For a particular manufacturing facility, however, wastewater monitoring and treatability data are necessary to select and design the most efficient and cost-effective treatment system.

IN-PLANT SOURCE CONTROLS

In-plant source controls are processes or operations which reduce pollutant discharges within a plant. Some in-plant controls (e.g., recycle) reduce or eliminate waste streams, while others recover valuable manufacturing by-products. In-plant controls provide several advantages: income from the sale of recovered material, reduction of end-of-pipe treatment costs, and removal of pollutants that upset or inhibit end-of-pipe treatment processes.

While many chemical manufacturing plants were designed to reduce water use and pollutant generation, improvements can be made in other existing plants to control pollution from their manufacturing activities (Campbell, 1981 and Royston, 1980). The major in-plant source controls that are effective in reducing pollution loads in the OCPSF industries are described in the following paragraphs.

Process Modification

Some older plants were designed with little regard for conservation of raw materials or water. As costs have increased and environmental regulations have become more stringent, some plants have modified their manufacturing processes. For example, some plants which once used batch processes have gone to continuous operation, eliminating the wastewaters generated by cleanup with

solvents or caustic between batches. Such modifications increase production yields and reduce wastewater generation.

Instrumentation

Occasional process upsets that discharge products, raw materials, or by-products are important sources of pollution in the OCPSF industries. Reaction kettles, for example, occasionally become overpressurized, bursting the rupture-discs and discharging chemical pollutants. More sophisticated instrumentation and added operator training can reduce these process upsets. Alarms connected to pH and flow sensors can detect process upsets early.

Solvent Recovery

The recovery of waste solvents has become a common practice among plants using solvents in their manufacturing processes. Several plants have instituted measures to further reduce the amount of waste solvent discharged, including better solvent recovery columns, incineration of solvents that cannot be recovered economically, and incineration of bottoms from solvent recovery units. Recovery is no longer economical when the cost of recovering additional solvent (less the value of the recovered solvent) is greater than the cost of treating or disposing of the solvent.

Water Reuse, Recovery, and Recycle

Replacing barometric condensers with surface condensers can reduce hydraulic or organic loads from condensation. Water-sealed vacuum pumps can be replaced if they create water pollution problems. Recirculation systems can greatly reduce the amount of contaminated water discharged from the pump seals.

In the past, plants often used cooling water once, then discharged it. Recycling through cooling towers is now a common industrial practice that dramatically decreases total discharge volume. Stormwater runoff from manufacturing areas can contain significant quantities of pollutants. Separation of stormwater from process wastewater has been practiced throughout the industry and often facilitates the isolation and treatment of contaminated runoff.

Another source of pollutant generation is contamination of the raw materials for production. Specific pollutants that are impurities in plant raw materials can be reduced by ordering purer raw materials from suppliers. Some highly toxic solvents can be replaced by less toxic substitute solvents. Prompt repair and replacement of faulty equipment can reduce waste losses. A good housekeeping and wastewater monitoring program can minimize wastewater generation. Spills can be cleaned up using dry methods instead of by washing into floor drains.

Process modifications to enhance wastewater recycle are also used within the OCPSF industry. Twenty-four facilities in the Summary Database indicated that, through wastewater recycle, they achieved zero discharge (See Table V-5).

IN-PLANT TREATMENT

In-plant treatment is directed toward removing certain pollutants from segregated product/process waste streams before these waste streams are combined with the plant's remaining wastewaters. In-plant technologies, usually designed to treat toxic or priority pollutants, are often technologies which could be used for end-of-pipe treatment of the plant's combined waste. Using these technologies on segregated internal wastestreams is usually more cost-effective, since treatment of low volume, concentrated and homogenous waste streams generated by specific product/processes is more efficient.

In-plant treatment, which is frequently employed to protect the plant's end-of-pipe treatment, may be designed to remove the following types of pollutants:

- Pollutants toxic or inhibitory to biological treatment systems.
- Biologically refractive pollutants.
- High concentrations of specific pollutants.
- Pollutants that may offer an economic recovery potential (e.g., solvent recovery).
- Pollutants that are hazardous if combined with other chemicals downstream.
- Pollutants generated in small volumes in remote areas of the plant.
- Corrosive pollutants that are difficult to transport.
- Pollutants that would contaminate the waste sludge from end-of-pipe treatment systems, thereby limiting disposal options.

Many technologies have proven effective in removing specific pollutants from the wastewaters produced by manufacturers of organic chemicals and plastics. The selection of a specific in-plant treatment scheme depends on the nature of the pollutant to be removed and on engineering and cost considerations.

The most frequently-used or promising in-plant treatment technologies include activated carbon adsorption, adsorption with ion-exchange resins, liquid-liquid extraction, steam stripping and various metals removal processes. Since all of these technologies are also end-of-pipe technologies, they are discussed under the next section, "End of Pipe Treatment and Discharge".

END-OF PIPE TREATMENT AND DISCHARGE

General

End-of-pipe treatment processes remove pollutants from the manufacturing plant's combined waste stream before discharge or disposal of the waste stream. TABLES VII-1A AND VII-1B list the wastewater treatment and disposal technologies that 561 plants reported using. The 561 plants consist of 326 Summary Database plants (direct dischargers and other or "zero" dischargers) and 235 indirect dischargers. Table VII-1A lists the technologies used by the Plastics-Only plants; Table VII-1B lists the technologies used by the remaining plants, the Not Plastics-Only plants.

In each table, the plants are subdivided into three types of dischargers: direct dischargers, indirect dischargers, and all other dischargers. Direct discharge is the release of treated or untreated wastewater to a receiving water (e.g., stream, river, lake). Indirect discharge is discharge to a municipal wastewater collection system, which transports the wastewater to a municipal sewage treatment plant (POTW -- publicly owned treatment works). The wastewater discharge and disposal methods other than direct or indirect discharge that are used by the OCPSF plants (sometimes called zero discharge) are described in section D.6 of this chapter. Processes not shown in one or both tables were never reported used in one or both categories, respectively. Since many plants treat more than one separate waste stream, the tables give both the number of plants and number of separate waste streams reported treated by each technology.

The treatment technologies considered for application to OCPSF plants are listed in TABLE VII-2, grouped by physical processes, biological processes, and physical-chemical processes. The choice of which individual treatment process or combination of processes to apply to a particular waste stream depends on the required effluent quality, the treatability of the wastestream, the space available for treatment facilities, details of the site, and cost considerations. The next three sections of this chapter include descriptions of each of the technologies listed in Table VII-2. Design removals of specific priority pollutants by the individual treatment processes have been incorporated into the Computer Model (Section VIII).

Physical Treatment Processes

Settling (Clarification, Sedimentation). Settling tanks, clarifiers, and sedimentation basins are designed to let wastewater flow slowly and quiescently, permitting solids more dense than water to settle to the bottom and materials less dense than water (including oil and grease) to float to the surface. The settling solids form a sludge at the bottom of the tank or basin; this sludge is usually pumped out continuously or intermittently from settling tanks and clarifiers or scraped out periodically from drained sedimentation ponds or basins. Oil and grease and other floating materials may be skimmed off the surface.

Settling may be used alone or as part of a more complex treatment process. It is usually the first process applied to wastewaters containing high concentrations of settleable suspended solids. Sedimentation is the second

TABLE VII-1A

WASTEWATER AND SLUDGE TREATMENT AND DISPOSAL TECHNOLOGIES
REPORTED BY PLASTICS-ONLY PLANTS

TECHNOLOGY	NUMBER OF USES REPORTED							
	Direct Dischargers		Indirect Dischargers		All Others		Total	
	P*	W*	P*	W*	P*	W*	P*	W*
I. Wastewater Treatment								
A. Physical Processes								
Settling or Clarification	31	32	31	34	0	0	62	66
Oil Separation	15	15	12	12	0	0	27	27
Screening	11	12	0	0	0	0	11	12
Filtration(a)	4	4	4	4	0	0	8	8
Air Stripping	3	3	3	3	1	1	7	7
Stripping (b)	0	0	3	3	0	0	3	3
Distillation	-	-	1	1	-	-	1	1
Flotation (DAF)	2	2	0	0	0	0	2	2
Equalization	40	40	22	23	1	1	63	64
Grit Removal	-	-	1	1	-	-	1	1
Skimming	5	5	1	1	0	0	6	6
Polishing Ponds	17	17	0	0	0	0	17	17
Incineration	-	-	6	6	-	-	6	6
Evaporation Tank	0	0	1	1	0	0	1	1
Scrubber	-	-	1	1	-	-	1	1
Decant Water	-	-	1	1	-	-	1	1
B. Biological Processes								
Activated Sludge-Air	39	39	4	4	0	0	43	43
Activated Sludge-Oxygen	1	1	-	-	0	0	1	1
Aerated Lagoon	7	7	3	3	0	0	10	10
Stabilization Pond(d)	-	-	1	1	-	-	1	1
Aerobic Lagoon	8	9	-	-	0	0	8	9
Facultative Lagoon	1	1	-	-	0	0	1	1
Trickling Filter	3	3	0	0	0	0	3	3
Rotating Biological Contactor	4	4	0	0	0	0	4	4
Imhoff Tank	1	1	0	0	0	0	1	1
Secondary Clarifier	48	48	(e)	(e)	0	0	48	48
Nutrient Addition	-	-	1	1	-	-	1	1

*P = Number of Plants; W = Number of Wastestreams; 0 = None reported; - = Not tabulated

VII-5

TABLE VII-1A (concluded)

TECHNOLOGY	NUMBER OF USES REPORTED							
	Direct Dischargers		Indirect Dischargers		All Others		Total	
	P*	W*	P*	W*	P*	W*	P*	W*
C. Chemical Processes								
Neutralization	33	34	24	26	-	-	57	60
pH Adjustment	0	0	1	1	0	0	1	1
Precipitation(g)	12	12	3	3	2	2	15	15
Chlorination	15	15	1	2	0	0	16	17
Activated Carbon	2	2	0	0	0	0	2	2
Ion Exchange	0	0	1	1	0	0	1	1
Chemical Treatment(n)	-	-	3	3	-	-	3	3
II. Sludge Treatment and Disposal								
A. Physical Processes								
Thickening (k)	11	11	1	1	0	0	12	12
Thickening (DAF)	3	3	4	4	0	0	7	7
Centrifugation	6	6	1	1	0	0	7	7
Filtration (l)	12	12	-	-	-	-	12	12
Pressure Filtration	-	-	1	1	0	0	1	1
Vacuum Filtration	-	-	2	2	0	0	2	2
B. Biological Processes								
Digestion (m)	23	23	-	-	0	0	23	23
C. Disposal								
Storage (n)	-	-	1	1	-	-	1	1
Sludge Ponds	14	14	0	0	0	0	14	14
D. Sludge Handling (n)	-	-	7	7	-	-	7	7
No Treatment	-	-	82	-	-	-	82	-
Total Number of Plants	72		148		55		275	
Total Number of Wastestreams		77		161		67		305

*P = Number of Plants; W = Number of Wastestreams; 0 = None reported; - = Not tabulated

(a) Specific type (sand, dual media, diatomaceous (earth) unknown
(b) Specific type (steam or air) unknown.
(c) Apparently to treat incinerator off gas.
(d) Includes oxidation ponds.
(e) Probably included in "Settling or Clarification"
(g) Includes coagulation and flocculation.
(h) Not specified whether ammonia, phosphorus, or both are removed.
(j) Method of removal not specified.
(k) Specific method unknown-probably gravity thickening.
(l) Specific method (pressure, vacuum, belt) unknown.
(m) Type (aerobic, anaerobic) unknown.
(n) Details unknown.

TABLE VII-1B

WASTEWATER AND SLUDGE TREATMENT AND DISPOSAL TECHNOLOGIES
REPORTED BY NOT PLASTICS-ONLY PLANTS

TECHNOLOGY	NUMBER OF USES REPORTED							
	Direct Dischargers		Indirect Dischargers		All Others		Total	
	P*	W*	P*	W*	P*	W*	P*	W*
I. Wastewater Treatment								
A. Physical Processes								
Settling or Clarification	66	68	38	39	5	6	109	113
Oil Separation	33	33	15	18	0	0	48	51
Screening	6	6	0	0	0	0	6	6
Filtration(a)	11	11	-	-	4	4	15	15
Sand Filtration	-	-	1	1	-	-	1	1
Dual Media Filtration	-	-	1	1	-	-	1	1
Air Stripping	5	5	4	4	1	1	10	10
Stripping (b)	-	-	4	4	-	-	4	4
Distillation	-	-	1	1	-	-	1	1
Flotation (DAF)	6	6	0	0	1	1	7	7
Equalization	79	80	23	28	4	6	106	114
Grit Removal	-	-	3	3	-	-	3	3
Skimming	4	4	0	0	0	0	4	4
Polishing Ponds	27	28	0	0	0	0	27	28
Incineration	-	-	4	4	-	-	4	4
Cooling Pond	0	0	2	2	0	0	2	2
Scrubber (c)	-	-	1	2			1	2
Decant Water	-	-	1	1			1	1
B. Biological Processes								
Activated Sludge-Air	65	65	10	10	1	1	76	76
Activated Sludge-Oxygen	7	7	-	-	0	0	7	7
Nutrification	1	1	-	-	0	0	1	1
Aerated Lagoon	20	20	5	5	2	2	27	27
Stabilization Pond(d)	-	-	3	3	-	-	3	3
Aerobic Lagoon	7	7	-	-	2	2	9	9
Anaerobic Lagoon	6	6	0	0	2	2	8	8
Facultative Lagoon	4	4	-	-	1	1	5	5
Trickling Filter	6	6	0	0	0	0	6	6
Rotating Biological Contactor	0	0	1	1	0	0	1	1
Imhoff Tank	2	2	0	0	0	0	2	2
Secondary Clarifier	87	88	(e)	(e)	2	2	89	90
Nutrient Addition	-	-	2	2	-	-	2	2

*P = Number of Plants; W = Number of Wastestreams; 0 = None reported; - = Not tabulated

TABLE VII-1B (concluded)

TECHNOLOGY	NUMBER OF USES REPORTED							
	Direct Dischargers		Indirect Dischargers		All Others		Total	
	P*	W*	P*	W*	P*	W*	P*	W*
C. Chemical Processes								
Neutralization	78	79	35	37	2	2	115	118
Precipitation(g)	10	10	4	4	1	1	15	15
Chlorination	9	9	2	2	1	1	12	12
Activated Carbon	8	8	5	5	-	-	13	13
Chemical Treatment(n)	-	-	1	1	-	-	1	1
Ammonia/Phosphorus Removal(h)	-	-	1	1	-	-	1	1
Heavy Metal Removal (j)	-	-	2	2	-	-	2	2
Dephenolization	-	-	1	1	-	-	1	1
Hydrolysis	-	-	1	2	-	-	1	2
Organic Extraction	-	-	2	3	-	-	2	3
II. Sludge Treatment and Disposal								
A. Physical Processes								
Thickening (k)	24	24	1	1	0	0	25	25
Thickening (DAF)	4	4	3	3	0	0	7	7
Centrifugation	11	11	1	1	0	0	12	12
Filtration (l)	19	19	0	0	0	0	19	19
B. Biological Processes								
Digestion (m)	28	28	-	-	0	0	28	28
C. Disposal to Ponds	19	19	0	0	1	1	20	20
D. Sludge Handling (n)	-	-	8	8	-	-	8	8
No Treatment	0		26		0		26	
Total Number of Plants	125		87		74		286	
Total Number of Wastestreams		136		114		95		345

*P = Number of Plants; W = Number of Wastestreams; 0 = None reported; - = Not tabulated

(a) Specific type (sand, dual media, diatomaceous (earth) unknown
(b) Specific type (steam or air) unknown.
(c) Apparently to treat incinerator off gas.
(d) Includes oxidation ponds.
(e) Probably included in "Settling or Clarification"
(g) Includes coagulation and flocculation.
(h) Not specified whether ammonia, phosphorus, or both are removed.
(j) Method of removal not specified.
(k) Specific method unknown-probably gravity thickening.
(l) Specific method (pressure, vacuum, belt) unknown.
(m) Type (aerobic, anaerobic) unknown.
(n) Details unknown.

VII-8

TABLE VII-2

CANDIDATE WASTEWATER TREATMENT TECHNOLOGIES

A. Physical Processes

- Settling (Clarification, Sedimentation)
- Oil separation
- Filtration
  - Sand
  - Mixed media
- Gas stripping
  - Air stripping
  - Steam stripping
- Distillation
- Flotation

B. Biological Processes

- Suspended growth
  - Activated sludge
    - Air
    - Pure oxygen
  - Aerated lagoon
  - Stabilization Ponds
  - Anaerobic Denitrification
- Fixed-film
  - Trickling filter
  - Rotating biological contactor

C. Physical-Chemical Processes

- Neutralization
- Chemical Precipitation (Coagulation and Flocculation)
- Chemical oxidation
- Adsorption
  - Activated carbon
    - Powdered
    - Granular
  - Resin
- Ion exchange
- Solvent (liquid-liquid) extraction

stage of most biological treatment processes: it removes the settleable materials, including microorganisms, from the wastewater; the microorganisms can then be either recycled to the biological reactor or discharged to the plant's sludge handling facilities. Clarification is used after most chemical coagulation-flocculation and pH adjustment processes to remove the inorganic particles from the wastewater. Polishing ponds, often the final step after biological treatment, are primarily quiescent settling ponds. The performance of settling facilities can often be improved by adding polymers to the wastewater.

Settling (or clarification, or sedimentation) is the end-of pipe treatment most frequently used by OCPSF industry plants. As shown in Tables VII-1A and VII-1B, over 300 of the 523 OCPSF plants listing their treatment technologies reported using it either alone or as part of a biological treatment system.

Oil Separation. Many toxic organic chemicals (typically large non-polar molecules) tend to concentrate in oils and greases. This oily phase can be removed from wastewaters through skimming, filtration, or flotation. Filtration and flotation are described in subsequent sections of this chapter. Skimming may be applied to settling, clarification and sedimentation tanks as noted above, or may be performed in separate quiescent basins if the wastestream contains no settleable material. According to Tables VII-1A and VII-1B, 75 of the 523 plants reported using skimming.

Filtration. Wastewater is filtered by passing it through a wire mesh screen (e.g., microstraining) or more commonly through a filter bed composed of granular materials such as sand and gravel. Suspended solids are removed through a combination of mechanisms including straining, interception, impaction, sedimentation, and adsorption. Oil and grease from the wastewater adhere to the filter media; high influent oil and grease concentrations may rapidly clog the filter. Filtration is usually the final treatment step when consistently low effluent suspended solids concentrations are desired.

Mixed media filters have multiple layers, typically sand, garnet, and coal. Membrane filters (used in ultrafiltration and reverse osmosis) have pores small enough to filter out large and medium-sized organic molecules. Membrane filters can remove not only suspended particles but also substantial fractions of dissolved impurities, including organic and inorganic materials. Membrane systems generally require extensive pretreatment of the wastewater (pH adjustment, filtration, chemical precipitation, activated carbon adsorption) to prevent rapid fouling or chemical damage to the membrane.

According to Tables VII-1A and VII-1B, 25 of the 523 plants reported using some type of filter.

Gas Stripping (Air and Steam). Gas stripping is the removal of volatile pollutants from wastewater by passing a gas through the wastewater. The volatile pollutant moves from the water phase into the gas phase to achieve an equilibrium, and is carried off by the gas. Air may be added to the wastewater through diffusers on the bottom of the tank, by mechanically aerating the top layer of the wastewater in a pond, or by cascading the wastewater down a tower.

A frequent municipal wastewater application of gas stripping is stripping ammonia with air. Many industrial plants use steam rather than air to strip solvents and other volatile organics from wastewaters, since higher temperatures shift the water phase-gas phase equilibrium for volatile compounds towards the gas phase. Before stripping ammonia with air or steam, the wastewater pH is raised by adding a base (often lime) to shift the water phase-gas phase ammonia equilibrium towards the gas phase. Although most commonly employed as an in-plant technology for solvent recovery, steam stripping is also used for end-of-pipe wastewater treatment. According to Tables VII-1A and VII-1B, 24 of the 523 plants reported using either air or steam stripping.

Distillation. Distillation is the separation of the components of a liquid solution by boiling the liquid and condensing the more volatile components which predominate in the vapor. It can be used in-plant to recover solvents from concentrated product/process wastestreams. According to Tables VII-1A and VII-1B, two of the 523 plants reported using distillation for end-of-pipe wastewater treatment.

Gas Flotation (Dissolved Air, Air, Vacuum). Particles approximately as dense as water neither float nor sink quickly enough to be removed in a simple settling tank equipped with surface skimmers. Gas flotation can be used to carry such particles to the surface for skimming.

Gas flotation introduces fine gas (usually air) bubbles into the wastewater; the bubbles attach to particles and carry them to the surface. Since oils and emulsions tend to concentrate at surfaces, the rising bubbles often carry oils, greases and emulsions to the surface for removal. Flotation is used in wastewater treatment primarily to remove suspended matter and to thicken biological sludges. Bubbles are added to or produced in the wastewater or sludge using one of the following methods:

(1) Dissolved-air floatation: Injection of air while the liquid is under pressure, followed by release of the pressure.

(2) Air flotation: Aeration at atmospheric pressure.

(3) Vacuum flotation: Saturation with air at atmospheric pressure, followed by application of a vacuum to the liquid.

In all of these systems, removal can be enhanced through addition of various chemicals that facilitate absorption or entrapment of the air bubbles.

According to Tables VII-1A and VII-1B, nine of the 523 plants reported using dissolved air flotation as part of their treatment systems.

Biological Treatment Processes

Biological treatment systems contact wastewater containing biologically degradable organic compounds with a mixture of microorganisms, in an environment containing the nutrients required for the microorganisms to utilize organic carbon as a food source. The microorganisms are classified as aerobic, anaerobic, or facultative. Aerobic microorganisms require free

dissolved oxygen to biologically oxidize the waste. Anaerobic microorganisms break down the organic material in the absence of oxygen and are usually inhibited by free dissolved oxygen. Facultative organisms can function under aerobic or anaerobic conditions as the oxygen availability dictates. In practice both aerobic and anaerobic conditions may exist in the same treatment unit, depending on degree of aeration, degree of mixing, effects of photosynthesis, thickness of the biological growth on fixed surfaces, and other factors which contribute to the supply and distribution of oxygen to the treatment system.

The BPT Development Document for the OCPSF industries contains detailed information on the biological treatment of conventional pollutants, especially biochemical oxygen demand (BOD) and total suspended solids (TSS), at OCPSF treatment plants. That information is not reproduced in this document.

Although the primary purpose of biological treatment is usually to reduce the overall oxygen demand of a wastewater, biological treatment can also remove some specific toxic compounds from wastewater. The major mechanisms for removal of toxic chemicals are:

- Biodegradation of the chemical into simpler compounds. Sometimes, however, the chemicals produced may be more toxic than the chemicals degraded. Chlorinated compounds are often difficult to degrade.

- Adsorption of the chemical onto biological solids. Heavy metals and large hydrophobic organic compounds are most readily adsorbed. The sludge containing these toxic solids must be properly treated prior to disposal.

- Air stripping to the atmosphere of volatile compounds in those processes, such as activated sludge, which include aeration. High concentrations of toxic volatile compounds in the wastewater may thereby produce air pollution hazards near the treatment facility.

The toxic compounds frequently present in industrial wastes can inhibit or upset biological processes. Acclimation can produce strains of organisms which are tolerant to normally toxic substances. However, once the specialized strain is established, major changes in wastewater composition or concentration can kill the acclimated organisms and cause failure of the treatment process. Reestablishment of a suitable microbial population can require months.

Biological wastewater treatment processes may be loosely grouped into two operational categories: "suspended growth," where the microoganisms are suspended in a mixture with the wastewater, and "fixed film", where the microorganisms grow on a fixed surface such as the rocks in a trickling filter. The biological treatment processes considered for application to OCPSF plants are listed in Table VII-2 and are described individually below.

Activated Sludge. Activated sludge is an aerobic suspended growth process typically requiring two tanks or ponds; it can be run as a batch process in one vessel. Wastewater flows into the first tank (the biological reactor or aeration tank) where it mixes with microorganisms and other suspended solids while being aerated, forming the activated sludge, also called the mixed liquor. After several hours to several days of aeration, the mixed liquor flows into the quiescent second tank (the secondary clarifier or settling tank) where the solids have several hours to settle to the bottom. The supernatant (relatively solids-free liquid at the top) leaves the tank as the treated effluent. The concentrated solids (sludge) at the tank bottom thicken and are drawn out by a sludge pump, which either returns them to the first tank (as return activated sludge) or discharges them to the plant's sludge treatment facilities (as waste activated sludge). Major configurations of the activated sludge process include the following:

(1) Conventional -- The aeration tanks are long and narrow, with plug flow (i.e., little forward or backwards mixing).

(2) Complete mix -- The aeration tanks are shorter and wider and the aerators, diffusers, and entry points of the influent and return sludge are arranged so that the wastewater mixes completely.

(3) Tapered aeration -- A modification of the conventional process in which the diffusers are arranged to supply more air to the influent end of the tank, where the oxygen demand is highest.

(4) Step aeration -- A modification of the conventional process in which the wastewater is introduced to the aeration tank at several points, lowering the peak oxygen demand.

(5) Modified aeration -- A modification of conventional or tapered aeration in which the aeration times are shorter, the pollutants loadings are higher per unit mass of microorganisms in the tank and the BOD removals are only 60 to 75 percent.

(6) Pure oxygen -- An activated sludge variation in which pure oxygen instead of air is added to the aeration tanks, the tanks are covered and the oxygen-containing off-gas is recycled. Compared to normal air aeration, pure oxygen aeration requires a smaller aeration tank volume and treats high-strength wastewaters and widely-fluctuating organic loadings more effectively. One of the most widely-used pure-oxygen processes is Union Carbide's UNOX.

(7) Extended aeration -- A variation of complete mix in which low organic loadings and long aeration times permit more complete wastewater degradation and partial aerobic digestion of the microorganisms.

(8) Contact stabilization -- An activated sludge modification using two aeration stages. In the first, wastewater is aerated with the return sludge in the contact tank for 30 to 90 minutes, allowing finely suspended colloidal and dissolved organics to absorb to the activated sludge. The solids are settled out in a clarifier and then aerated

in the sludge aeration (stabilization) tank for three to six hours before flowing into the first aeration tank.

Activated sludge is the most common end-of-pipe biological treatment employed in the OCPSF industry Summary Database. According to Tables VII-1A and VII-1B, of the 523 plants, 121 reported using activated sludge, including two plants which used pure oxygen activated sludge.

Aerated Lagoon. An aerated lagoon is a pond which is kept aerobic and completely-mixed using either mechanical surface aerators or diffused air units. After treatment in the aerated lagoon, the wastewater flows into a settling tank or basin for solids separation. For those systems where the solids are returned to the aerated lagoon, the biological treatment is identical to activated sludge. Where the solids are not recycled, the aerated lagoon is a type of stabilization pond (see below). Where inexpensive land is available, aerated lagoons are easier and cheaper to construct than activated sludge aeration tanks.

According to Tables VII-1A and VII-1B, 37 of the 523 plants reported using aerated lagoon treatment.

Stabilization Ponds. Stabilization ponds (or stabilization lagoons or oxidation ponds) are relatively shallow earthen basins where wastewater is treated without recycle of biological solids (in contrast to activated sludge). Because they are inexpensive to build and operate, ponds are very popular in treating domestic wastewater from small communities and are used extensively for the treatment of industrial wastewater and mixtures of industrial and domestic wastewater that are amenable to biological treatment.

Ponds can be built and operated in many configurations: with continuous or intermittent discharge; with mechanical aeration, natural surface reaeration, or algae photosynthesis; as suspended-, attached- or combination-growth processes. The two types most often used by OCPSF plants, aerobic lagoons and anaerobic lagoons, are described below.

(1) Aerobic Lagoons. Aerobic lagoons are ponds usually less than 18 inches deep which are mixed periodically. Oxygen is supplied to the lagoon by natural surface reaeration and algae photosynthesis. Bacteria breaks down the wastes and generates carbon dioxide and nutrients (primarily nitrogen and phosphorus). Algae reproduce in the presence of sunlight using the nutrients and inorganic carbon to yield the oxygen needed by the aerobic bacteria. Algae do not settle well using conventional clarification. To achieve reasonably low effluent suspended solids (algae) concentrations, coagulation, filtration, and multiple cell settling lagoons are often used.

According to Tables VII-1A and VII-1B, nine OCPSF industry plants reported using aerobic lagoons.

(2) Anaerobic Lagoons. Anaerobic lagoons are up to 20 feet deep and may be constructed with steep side walls to minimize wall area and thereby minimize loss of the heat generated by the anaerobic biological degradation of the wastewater. A natural organism cover (pellicle) usually forms on the surface and helps retain heat, suppress odor, and maintain anaerobic

conditions. Typically, wastewater enters near the lagoon bottom and is discharged on the opposite side of the lagoon below the pellicle.

According to Tables VII-1A and VII-1B, eight OCPSF plants reported using anaerobic lagoons.

Anaerobic Denitrification. Denitrification is the biological conversion of nitrates to nitrogen, which returns to the atmosphere as a gas. The biological process requires anaerobic conditions. Denitrification is used most frequently as a suspended growth process following an activated sludge system that has converted most forms of nitrogen to nitrates. In this application, the denitrification treatment system has three major components:

- A complete-mix reaction tank without aeration. A carbon source such as methanol is usually added to this tank to support the biological reaction.
- A sedimentation tank where the anaerobic microorganisms settle out and are either recycled to the reaction tank or wasted as sludge.
- A flash stripper between the two tanks which strips the nitrogen gas to the atmosphere.

Anaerobic denitrification can also be performed in a submerged fixed film reactor.

Trickling Filters. Trickling filters are the traditional fixed-film or attached-growth wastewater treatment process. Older trickling filters are circular beds of rock one to three meters deep, over which the wastewater is intermittently or continuously sprayed through fixed or rotating distribution arms. Microorganisms (mostly bacteria, fungi, and protozoa) growing on the rocks degrade organic compounds in the wastewater, producing more microorganisms and thickening the biomass film on the rock. When this biological slime become too heavy, it falls (sloughs) off the rocks into the treated wastewater collecting underneath the trickling filter. The wastewater is clarified in a sedimentation tank; some plants recycle part of the clarified effluent or even part of the sludge back into the wastewater applied to the trickling filter. Trickling filters may be used in series (stages) with or without settling tanks between them.

Trickling filters may be grouped as low-, intermediate-, high-, and super-rate filters with increasing organic and hydraulic loading rates. The first three classes are one to three meters deep. Super-rate (also called roughing) filters are five to twelve meters deep and made of redwood slats or plastic media, either of which have much higher surface to volume ratios than rock. High-rate filters may be either rock or synthetic media; low- and intermediate rate filters are always rock, slag, or a similar material. Super- and high-rate installations have high ratios of recycling effluent onto the filters; low-rate filters have no such recirculation; intermediate-rate filters have zero or low recirculation ratios.

According to Tables VII-1A and VII-1B, nine of the 523 plants reported using trickling filters.

Rotating Biological Contactors. A rotating biological contactor (RBC) treatment system consists of multiple parallel rows of horizontal shafts each of which is an axis for a large number of parallel corrugated plastic disks. The shafts are mounted on a contour-bottomed tank containing wastewater such that about forty percent of each disk is submerged. Microorganisms growing on the disks degrade the organic materials in the wastewater. As wastewater flows through the tank, the disks rotate slowly, exposing the microorganisms on the disks alternately to the wastewater and to oxygen in the air. As with the trickling filter, biomass sloughs off the disks and is separated from the effluent in a clarifier.

According to Tables VII-1A and VII-1B, five of the 523 OCPSF plants reported using rotating biological contactors. Four of these plants are "Plastics-Only" facilities.

Physical-Chemical Treatment Processes

Wastewater treatment processes which rely on chemical reactions are classified as chemical treatment processes. The chemical treatment processes considered for application to OCPSF plants are listed in Table VII-2 and described individually below.

Neutralization. Before discharge to a receiving water and often before biological or chemical treatment, the pH of a wastewater should be fairly neutral (pH 6 to pH 9). Neutralization is the addition of chemicals to bring the wastewater closer to a neutral pH. Alkaline (high pH or basic) wastewaters may be neutralized with hydrochloric acid, carbon dioxide, sulfur dioxide, and, most commonly, sulfuric acid. Acidic (low pH) wastewaters may be neutralized with limestone or lime slurries, soda ash, caustic soda, or anhydrous ammonia. Acidic and alkaline process wastewaters are used in some plants for neutralization. The selection of neutralizing agents incorporates cost, availability, ease of use, reaction by-products, reaction rates, and quantities of sludge formed.

According to Tables VII-1A and VII-1B, over 170 of the 523 plants reported using neutralization.

Chemical Precipitation (Coagulation and Flocculation). Chemical coagulants such as lime, aluminum sulfate (alum), ferrous sulfate (copperas), ferric sulfate, and ferric chloride are often added to wastewater to alter the chemical and physical states of suspended solids and dissolved solids such as heavy metals and thereby facilitate their removal by sedimentation. Many metals ions form insoluble compounds when hydroxides or sulfides are added to wastewater at high pH. In some cases the removal is effected by entrapment within a voluminous precipitate (sweep floc) consisting primarily of the added coagulant. Chemical addition also increases the concentration of dissolved constituents in the wastewater.

To achieve maximum pollutant removals, chemical precipitation should be carried out in four phases: addition of the chemical to the wastewater; rapid

(flash) mixing to distribute the chemical homogeneously into the wastewater; slow stirring (flocculation) to promote particle growth by various coagulation mechanisms; and clarification (or settling or sedimentation) to remove the flocculated solid particles. Polymers are sometimes added to promote flocculation.

According to Tables VII-1A and VII-1B, about 30 of the 523 plants reported using precipitation.

Chemical Oxidation. Chemical oxidation is the addition of oxidizing agents such as chlorine, hypochlorite, hydrogen peroxide, potassium permanganate, ozone, and chlorine dioxide to industrial wastestreams containing cyanides, sulfides, ammonia, phenols, and other harmful substances. The pollutants may be completely destroyed (as in the oxidation of cyanide to carbon dioxide and elemental nitrogen) or chemically changed to less harmful forms (as in the oxidation of sulfides to sulfates). According to Tables VII-1A and VII-1B, about 28 of the 523 plants reported using chlorination. In many of these plants, chlorine was apparently used for disinfection rather than for oxidation of chemical pollutants.

Activated Carbon Adsorption. As applied to wastewater treatment, adsorption is the process of concentrating substances dissolved in the wastewater at a solid surface. The dominant application of adsorption in wastewater treatment is the use of activated carbon to adsorb dissolved organic materials. Activated carbon is also often used in water treatment to remove organic compounds which impart taste, color, and odor. The organic priority pollutants removed best by activated carbon are large hydrophobic molecules such as PCBs and pesticides. Granular activated carbon in a fixed bed can also remove low concentrations of particulate matter; high influent particulate concentrations will clog the bed rapidly.

Activated carbon is a carbonaceous material, typically wood or charcoal, that has been chemically and thermally treated to produce a very porous structure having a large surface area dotted with chemically active sites. Chemicals in the wastewater migrate into the pores and adsorb (attach) to the surface through physical and chemical bonds, both weak and strong . When the surface sites are all occupied by pollutants, the activated carbon must be either replaced or regenerated. The carbon is regenerated by heating it in a furnace to oxidize the organic pollutants, making the surface sites available for adsorption once again.

Activated carbon may be used in two physical forms: granular activated carbon (GAC) or powdered activated carbon (PAC). GAC is usually placed in a fixed-bed, expanded-bed, or moving-bed column through which the wastewater is passed. PAC is usually mixed into the wastewater (often in the activated sludge aeration tank) and later removed from the wastewater by settling or filtration.

According to Tables VII-1A and VII-1B, fifteen of the 523 plants reported using activated carbon.

Ion Exchange. Ion exchange is a unit process by which ions of a given species are displaced from an insoluble exchange material (resin) by ions of a

different species in solution. It may be operated in either a batch or a continuous mode. In a batch process, the resin is simply stirred with the water to be treated in a reactor until the reaction is complete. The spent resin is removed by settling and subsequently is regenerated and reused. In a continuous process, the exchange material is placed in a bed or a packed column, and the water to be treated is passed through it.

Ion exchange is occasionally used to lower drinking water hardness by removing calcium and magnesium ions. In domestic and industrial wastewaters, ion exchange resins may be used to remove ammonia, chromium, and heavy metals such as arsenic and nickel. Ion exchange is frequently used in the metals and electronics industries to recover precious metals such as gold and silver from concentrated process wastestreams. According to Tables VII-1A and VII-1B, only one of the 523 plants reported using ion exchange for end-of-pipe treatment.

Resin Adsorption. Resin adsorption is analogous to activated carbon adsorption. The major difference is that the resins are chemically regenerated (with solvents or acidic or basic solutions), so the compounds adsorbed are not destroyed as happens in thermal regeneration of activated carbon. Resin adsorption is often used to recover chemicals from concentrated process wastestreams. None of the 523 plants reported using resin adsorption of end-of-pipe treatment.

Solvent (Liquid-Liquid) Extraction. Solvent extraction or liquid-liquid extraction is the removal of specific components (e.g., organic pollutants) from a solution (e.g., a product/process effluent) by mixing the solution with an immiscible liquid (e.g., solvent) in which the specific components are more soluble than in the original solution. The process requires the following steps:

- Contact of the solvent with the solution.
- Separation of the solvent from the solution.
- Removal of the solute (the specific components) from the solvent, usually by distillation or by a second extraction.
- Further recovery of solvent from the solution, usually by stripping, distillation, or adsorption.
- Disposal of the solute.
- Discharge of the treated solution.
- Recycle of the solvent.

In OCPSF wastewater treatment, solvent extraction is most often used as an in-plant treatment to remove hydrophobic organic pollutants from the segregated wastewaters produced by individual product/processes. Removal of phenols and related compounds from wastewaters using solvents such as crude

oil, benzene, and toluene, is a principal application. According to Tables VII-1A and VII-1B, two of the 523 plants reported using extraction with organic solvents as an end-of-pipe treatment.

Other ("Zero") Wastewater Discharge or Disposal Methods

Wastewater discharge or disposal methods other than direct and indirect discharge used by OCPSF plants, frequently called "zero discharge" methods, are tabulated numerically in TABLE VII-3 for 94 plants and are described in the following paragraphs.

Incineration. Incineration is the burning of the waste stream in an incinerator, with or without auxiliary fuel, as dictated by the heat value of the material being incinerated. Incineration is typically used for the disposal of flammable liquids, tars, solids, or low volume hazardous waste. The gaseous combustion products may require scrubbing, particulate removal, or other treatment to capture materials that cannot be discharged to the atmosphere. Incineration of an aqueous waste stream greatly reduces the water content by evaporation, and may produce either a concentrated waste stream requiring further treatment or simply a solid residue (ash) requiring disposal.

Evaporation. The purpose of evaporation is to remove water from wastewater and thereby concentrate the pollutants, rendering the waste stream more amenable to disposal or further treatment. Evaporation is normally applied to wastewaters prior to incineration or landfilling.

Evaporation can be performed in equipment ranging from open solar ponds or tanks without heating equipment to large, sophisticated, multi-effect evaporators capable of handling large volumes of liquid. Typically, steam or some other external heat source is used. The major design concern in evaporation is supplying the energy required.

Surface Impoundment. Surface impoundments, into which wastewaters are placed so the volume can decrease by evaporation and percolation, require relatively large land areas. The liquid discharged to surface impoundments (large storage ponds or lagoons) eventually evaporates into the atmosphere or percolates into the soil (becoming groundwater). A net reduction of liquid requires that temperature, wind, and humidity enable evaporation to outweigh precipitation. Evaporation may be enhanced by mechanical aeration, spraying or heating of the liquid.

The rate of percolation depends on the soil composition and structure. Where infiltration to groundwater is undesirable, impoundment ponds are often lined with synthetic liners or clay, making the impoundments evaporation ponds.

Wastewater solids accumulate in the impoundments, usually reducing percolation, and must be removed periodically.

Land Application. Land application of wastewater, such as spray irrigation, both treats and disposes of the wastewater. The plants, soil, and soil microorganisms treat the wastewater by physical filtration, biological uptake and degradation, and physical-chemical surface adsorption and exchange. Since

TABLE VII-3

OTHER ("ZERO") DISCHARGE AND DISPOSAL METHODS

METHOD	NUMBER OF PLACES TECHNOLOGY USED			
	PLASTICS-ONLY PLANTS		NOT PLASTICS-ONLY PLANTS	
	Number of Plants	Number of(a) Wastestreams	Number of Plants	Number of(a) Wastestreams
No Wastewater Reported	12	15	8	20
All Wastewater Recycled	9	10	15	15
Incineration	3	10	4	14
Evaporation	2	2	0	0
Surface Impoundment	3	7	9	11
Land Application	3	3	0	0
Deep Well Injection	2	3	5	24
Offsite Treatment	1	1	3	5
Contract Hauling	11	16	4	6
TOTAL	46	67	48	95

(a) Includes other ("zero") discharge waste streams at direct discharge plants.

the liquid either evaporates, percolates to groundwater, or runs off to surface waters, the site should be chosen and maintained to protect ground and surface waters. Wastewaters containing pollutants that may persist in the soil for months or years and later be assimilated by the crops should not be applied to existing or potential farm land.

Deep Well Injection. Deep well injection is wastewater disposal by pumping under pressure into a well, usually 3,000 to 15,000 feet deep. The wells should be drilled through impervious caprock layers into underlying porous strata which have no present or future value such as domestic or agricultural water supply; brine (high salt concentration) aquifers are often used. Pretreatment of the waste is normally required to reduce pump and pipe corrosion and to remove suspended solids which can plug the receiving strata. Chemical conditioning may be required to prevent reactions between the waste and the receiving environment.

Because relatively high pressures are required for injection and dispersion of the waste, pumping costs for deep well disposal may be high.

Because deep well injection may contaminate usable aquifers, some states prohibit deep well disposal. Contamination of aquifers can occur either from improperly sealed well casings which allow the waste to flow up the bore hole or from unknown faults and fissures in the caprock which allow the waste to escape into the usable strata. This problem could be aggravated by the increased subterranean pressure created by the injection well, especially if substantial withdrawals of water from the usable aquifer are made nearby.

Offsite Treatment. Offsite treatment is an arrangement where a plant's wastewaters are transported by pipe or tank truck to a central treatment facility owned by and serving several production plants. Typically the plants involved have developed such an arrangement because it is more economical than for each plant to treat its own wastewaters. The capital and operating costs are usually allocated among the individual plants according to waste flow and pollutant loading. Depending on the nature of the individual plant's wastewater and restrictions established by the central treatment plant, wastes sent offsite for treatment may require pretreatment at the generating plant.

Contract Hauling. Contract hauling is a wastewater disposal method in which the wastewater generator pays a contract hauler to pick up the wastes at the generation site and haul them to another site for treatment or disposal. The hauling may be by truck, rail or barge.

Contract hauling is frequently used on toxic small volume wastes that may require highly specialized treatment before proper disposal. The environmental impact is not eliminated but only shifted from the generating site to another treatment and disposal site.

SLUDGE TREATMENT AND DISPOSAL

General

The solid residues (sludges) resulting from wastewater treatment are usually liquids or semisolids, containing 0.25 to 12 percent solids, depending on the operations and processes used (Metcalf & Eddy, 1979). The cost of treating and disposing of these sludges is typically about equal to the plant's wastewater treatment and disposal cost.

Handling sludges from industrial wastewater treatment may be complex, because (1) the sludge is mostly water, not solid matter, (2) sludge from biological treatment will decompose and become offensive if not properly treated, and (3) many toxic pollutants, such as heavy metals and large hydrophobic organic compounds, tend to concentrate in the biological or physical-chemical solids in the sludge.

Treatment and Disposal Processes

TABLE VII-4 lists the treatment and disposal technologies most applicable to industrial wastewater sludges. The typical sludge handling sequence is thickening using gravity, flotation, or centrifugation; stabilization using biological, chemical or heat treatment; conditioning to improve dewatering; dewatering using filtration, centrifugation, bed drying or heat treatment; and disposal of the concentrated, stabilized sludge cake. Numerous combinations of the processes listed in Table VII-3 are possible in this sequence. Frequently, sludges from biological wastewater treatment are thickened through air flotation, biologically digested, dewatered on drying beds and disposed to landfills. Sludges from chemical wastewater treatment are often thickened by gravity or centrifugation, chemically stabilized and conditioned, and dewatered on centrifuges or belt filters before disposal.

The choice of which treatment and disposal processes to use at a particular industrial wastewater treatment plant depends on the physical, chemical, and biological characteristics of the plant sludges, the space available for sludge handling facilities, and other site-specific engineering considerations developed in this document. The regulations developed in this document focus on wastewater treatment (not sludge handling) technologies for the OCPSF industries. Specific sludge handling technologies are closely linked to specific wastewater treatment processes. The individual sludge treatment and disposal technologies are not described in detail in this report. A brief description of each appears with performance assumptions and application limitations in Appendix J, The Treatment Catalogue.

The physical, chemical, and biological principals underlying sludge handling are the same as those underlying wastewater treatment. Thorough descriptions of the sludge treatment and disposal technologies may be found in standard textbooks such as Metcalf and Eddy (1979).

TABLE VII-4

CANDIDATE SLUDGE TREATMENT
AND DISPOSAL TECHNOLOGIES

	FUNCTION			
	Thicken	Stabilize	Condition	Dewater
I. TREATMENT PROCESS				
A. Physical Processes				
Thickening				
Gravity	x			
Flotation	x			
Centrifugation	x			x
Filtration				
Vacuum				x
Pressure				x
Belt				x
Drying Bed				x
B. Biological Processes				
Anaerobic Digestion		x	x	
Aerobic Digestion		x		
Composting		x		
C. Physical-Chemical Processes				
Chemical Oxidation		x		
Chemical Conditioning			x	
Elutriation			x	
Heat Treatment (Wet Air Oxidation)		x	x	
Pyrolysis				x
Incineration				x
II. DISPOSAL				
Incineration				
Ocean Dumping				
Landfilling				
Land Application				
Reuse				

WASTEWATER AND SLUDGE TREATMENT TECHNOLOGIES USED TO DEVELOP EFFLUENT LIMITATIONS COSTS

As explained in Section VIII, EPA has developed a computer model of OCPSF wastewater treatment train performance and costs to facilitate selection of effluent limitations for this industry. The wastewater and sludge treatment technologies for OCPSF Industries used in the computer model are listed in TABLE VII-5; these technologies are a subset of the candidate technologies listed in Tables VII-2 and VII-4. The detailed priority pollutant removal assumptions, application limitations, and cost estimating algorithms for each technology listed in Table VII-5 were derived from the technical literature, engineering experience, and the Agency's OCPSF data-gathering efforts. These details are presented in Appendix J (Treatment Catalogue) and the Computer Model Documentation (Appendix K).

The Agency's data-gathering efforts included a major research program initiated by EPA's Organic Chemicals Branch (OCB) to develop priority pollutant-specific data necessary to verify, modify, and apply treatment technology models for the wastewater treatment technologies used in the computer Model. The research program included: the derivation and compilation of biological and physical constants data for specific priority pollutants, an evaluation of methods for predicting the removal of priority pollutants in single and multi-component waste streams, and an assessment of the effects of priority pollutants on certain treatment processes. OCB-sponsored treatability studies were conducted for activated sludge, activated carbon adsorption, steam stripping, and organic resin adsorption processes. A discussion of the development of mathematical models for these technologies and a summary of the OCB-sponsored treatability studies and other relevant treatability data are presented in Appendix E.

TABLE VII-5

WASTEWATER AND SLUDGE TREATMENT TECHNOLOGIES
USED IN COMPUTER MODEL

I. WASTEWATER TREATMENT

A. Physical Treatment Processes

Settling (Clarification, Sedimentation)
Oil Separation
Dual Media Filtration
Steam Stripping
  Conventional
  Alkaline Stripping of Ammonia
Dissolved Air Flotation

B. Biological Treatment Processes

Air Activated Sludge
    Standard (Oxidation of Carbonaceous Pollutants)
    Nitrification
Anaerobic Denitrification

C. Chemical Processes

Neutralization
Chemical Precipitation (Coagulation and Flocculation)
Chemical Oxidation
  Ozonation of Cyanide and Phenol
  Alkaline Chlorination
Granular Activated Carbon Adsorption
Ion Exchange
Solvent (Liquid-Liquid) Extraction

D. Ancillary Processes

Deep Well Disposal
Equalization
Aeration for Aerobic Biological Treatment
Nutrient Addition for Biological Treatment
Activated Carbon Regeneration
Lime Handling
Cooling Towers
Heat Exchangers
Steam Injectors

TABLE VII-5 (concluded)

II. SLUDGE TREATMENT AND DISPOSAL

Gravity Thickening
Vacuum Filtration
Pressure Filtration
Aerobic Digestion
Incineration
Landfilling

REFERENCES

CAMPBELL, MONICA E. and GLENN, W.M. Profit from Pollution Prevention - A Guide to Industrial Waste Reduction and Recycling. Pollution Probe Foundation, Ontario, Canada. 1981.

ARTHUR D. LITTLE, INC. Physical, Chemical, and Biological Treatment Techniques for Industrial Wastes, U.S. Environmental Protection Agency (USEPA) Office of Solid Waste C-78950, November 1976.

METCALF AND EDDY, INC., Wastewater Engineering: Treatment, Disposal Reuse, McGraw-Hill, New York. 1979.

ROYSTON, MICHAEL G., "Making Pollution Prevention Pay," Harvard Business Review, November-December 1980, p. 6-27.

SECTION VIII

EVALUATION OF TREATMENT TECHNOLOGY PERFORMANCE AND COST

INTRODUCTION

Earlier chapters of this report have described EPA's collection of data on wastewaters discharged by Organic Chemicals and Plastics/Synthetic Fibers (OCPSF) Industry plants, EPA's selection of which toxic pollutants to regulate by setting technology-based BAT, NSPS, and Pretreatment effluent limitations, and the pollutant control and treatment technologies that can be applied to these wastewaters. To select BAT, NSPS, and Pretreatment limitations for the OCPSF industries, the Agency evaluated the following:

- The priority pollutant concentrations in representative OCPSF wastestreams that meet the proposed BPT limitations on conventional pollutants (see the BPT Development Document);
- The priority pollutant effluent quality attainable by applying various treatment trains to the BPT effluents;
- The construction and operating costs of each such treatment train; and
- The energy consumption, solid waste generation, air pollutant emissions, and other non-water quality environmental impacts of each treatment train.

The numerous product/process combinations employed in OCPSF manufacturing plants, the diversity of the toxic pollutants found in the industry's wastewater, and the variety of treatment technologies meriting consideration convinced the Agency that the most effective approach to evaluating alternative sets of numerical limitations would be to develop and use a computer model that could estimate the construction and operating costs of various combinations of available treatment technologies, and non-water quality environmental impacts of each set of numerical limitations.

This chapter describes the history and structure of the computer model developed by EPA to evaluate cost estimations associated with candidate sets of numerical effluent limitations, explains the use of the computer model evaluations, and discusses non-water quality environmental considerations. The Agency's model was used to estimate the costs to the OCPSF industry of the BAT, NSPS, and Pretreatment limitations proposed in Sections IX, X and XI, respectively, but not to actually select the numerical limitations. The procedure for selecting the numerical limitations is explained in each of the respective chapters.

DESCRIPTION AND USE OF MODEL

Development of the Model

Catalytic, Inc. had previously developed and used a manual cost estimating technique in a study prepared for the National Commission on Water Quality (NCWQ 1975). Under EPA Contract No. 68-01-5011, Catalytic expanded its manual technique into a computer-assisted wastewater and sludge treatment design and cost estimation model (the Model) applicable to evaluating the economic impacts of effluent limitations on the OCPSF industry. The Model incorporated the following features to facilitate accurate evaluation of costs associated with alternative OCPSF limitations:

- Data on mean and peak pollutant loadings and flows for 176 high-priority product/processes.
- Flexible treatment train design procedures for in-process pollutant controls, pretreatment of segregated and combined wastestreams, and end-of-pipe treatment of combined wastestreams.
- Design and cost estimating procedures incorporating all significant factors associated with OCPSF treatment unit processes and disposal methods.
- Procedures for estimating cost-effluent relationships for treatment trains and their component unit processes.
- Procedures for varying the pollutant effluent concentration targets which the Model designs treatment trains to meet.
- Segregation of data and design and cost algorithms into discrete computer program modules to facilitate updating, as needed, of the cost and treatability assumptions in the Model.

During the Model's design and use, the Agency took the following steps to validate the Model and improve its estimates of treatment cost and effluent quality: (1) comments from the Chemical Manufacturer's Association (formerly the Manufacturing Chemists' Association) were periodically solicited and incorporated into the Model, as appropriate, to ensure that the Model reflects current industry practice; (2) Agency contractors and staff performed bench-scale studies to supplement and improve the treatability data in the Model; (3) the Agency's Science Advisory Board reviewed the Model's engineering design assumptions and methodology; and (4) costs estimated by the Model were compared with costs from actual plants.

The comparison of costs generated by the Model with real plant costs revealed discrepancies in both capital and operating costs. Some of these discrepancies resulted from differences in accounting practices used by the participating plants; others resulted from differences between the treatment

technologies used at the plants and the technologies available in the Model. For example, one plant operated a UNOX system but the Model can only design an air activated sludge system. Not surprisingly, the costs reported by the plant for constructing and operating the UNOX system were higher than those estimated by the Model for an activated sludge system. The details of this benchmarking effort are described in the November, 1981, USEPA Contractors Engineering Report - Analysis of Organic Chemicals and Plastics/Synthetic Fibers Industry - Toxic Pollutants, Volume I, Section 3.3.2.6 and Appendix O.) The Agency intends to perform a new benchmarking study to more accurately assess the validity of the Model's cost estimating abilities.

Model Components and Use

The Model has three distinct components: (1) the permanent files which contain default values for product/process-specific pollutant loadings, pollutant-specific treatability factors, and technology-specific cost data; (2) the 28 treatment technology program modules which model the specific treatment unit process design, performance, and significant factors affecting cost; and (3) the control programs that sequence the treatment units, track changes in wasteload characteristics following treatment or merging of streams, and estimate the overall cost. Details of each of these three basic components are discussed in Appendix K. The design assumptions incorporated into each treatment technology module are stated in Appendix J, the Treatment Catalogue.

ESTIMATION OF BAT AND PSES COSTS USING THE MODEL

General

The Agency estimated the costs to the entire Organic Chemicals and Plastics/Synthetic Fibers Industry (OCPSF) of complying with the proposed BAT and PSES regulations from estimated costs generated by the Model for treating wastewaters from OCPSF plant configurations. This section describes the model plant configurations used (Generalized Plant Configurations, or GPCs) and summarizes how costs were estimated both for treating the wastewater from each GPC and for compliance by the entire OCPSF industry. The results of these cost estimates are presented in Section IX for BAT and in Section XI for PSES.

Description of GPCs

The previous section described the computer model which EPA used to estimate BAT and PSES compliance costs in the OCPSF industry. The Model's Master Process File contains wasteload information for 176 priority OCPSF product/processes. Using these product/processes, EPA created a set of 55 Generalized Plant Configurations (GPCs). Each GPC represents a typical combination of product/processes found in the OCPSF industry.

The product/processes used in GPCs were those 147 organic chemicals product/processes and 29 plastic/synthetic fibers product/processes whose process wastewaters had been analyzed for the presence of priority pollutants in the Agency's Verification program discussed in Section V. Each GPC is a

group of organic and plastic product/processes that represents an entire manufacturing plant or major portions of plants contained in the database which had been developed from responses to the §308 Questionnaires (see Section II). The GPCs reflect combinations of product/processes reported by plants in the database. Each plant's product mix was evaluated to determine similarities with other plants. The configurations were developed in the following steps:

1. Development of chemical trees that included all product/processes to be modeled.

2. Selection of portions of the chemical trees and development of matrices of plants and products for preliminary evaluation of similarity.

3. Re-examination of those plants with initial similarity, by comparison of all product/processes and production levels, and development of a preliminary GPC.

4. Selection of final configurations after all products and plants were evaluated and assigned to a configuration.

5. Performance of a mass balance on the average production reported by plants used in the configuration.

These procedures are discussed in greater detail in the November, 1981 U.S. EPA Contractors Engineering Report - Analysis of Organic Chemicals and Plastics/Synthetic Fibers Industries - Toxic Pollutants, pp. 3-280ff. Descriptions of the individual GPCs are given in Appendix G of this BAT Development Document.

Use of GPCs to Estimate OCPSF Regulatory Costs

Overview. Appendix K discusses the cost estimating assumptions and unit costs programmed into the Model. In 1980, the Agency performed Model runs for the product/process mixes and average daily production levels constituting each GPC, using stringent sets of effluent target limits for BAT and PSES. The BAT and PSES limitations proposed in this document (see Sections IX and XI, respectively) are less stringent than the 1980 targets. To reflect these less stringent limits, EPA revised the costs that had been calculated in 1980 for each GPC and used these revised GPC costs to first estimate the costs at individual OCPSF plants and then to estimate compliance costs for the OCPSF industrial category. This section discusses each of those steps.

1980 GPC Runs. In the summer of 1980, the Agency estimated the costs for compliance by each of the 55 GPCs with the BPT, BCT, BAT, and NSPS limitations then being considered. The Model was run using an option which allows the user to specify the major treatment processes to be included in the treatment train. The Model then designs the complete treatment train (including ancillary wastewater treatment processes and sludge handling), estimates treatment costs and calculates the effluent quality produced by the train and any ancillary unit processes needed.

The first step in evaluating BAT technology for each GPC was to generate BPT priority pollutant effluent concentrations produced by a biological treatment train adequate to meet effluent target levels of 30 mg/l each of BOD and TSS. Additional in-process control requirements and treatment of individual product/process waste streams were then added for those GPCs where BPT effluent priority pollutant concentrations exceeded ten times the concentration listed in the Multi-Media Environmental Goals (USEPA, 1977). The multiplier of ten reflected an assumed effluent dilution of ten to one, since the multi-media goals are receiving water, not effluent, concentrations. Where these target concentrations did not appear achievable using the Model, they were raised to 50 µg/l. The costs associated with these BAT treatment and control requirements were then estimated. The treatment unit processes specified by the Agency's contractor in these BAT runs depended on the GPC product/processes, and generally included some combination of chemical precipitation, steam stripping, ion exchange, solvent extraction, and activated carbon adsorption. Necessary ancillary units were inserted by the Model.

Revisions to 1980 GPC Runs. In many cases, the target concentrations used in 1980 were more stringent than the BAT and PSES effluent limitations and standards now being proposed. The 1980 treatment systems, therefore, were designed for greater removal of toxic pollutants and cost more than necessary to meet the present proposed limitations. The 1980 treatment systems were revised to reflect the new proposed BAT limitations and adapted to the proposed PSES limitations, as described in this section.

The final proposed limitations were not yet available when these cost revisions were made. The revised effluent targets used are slightly more stringent than the 30-day limitations now being proposed. The revised targets were 25 ppb for acid-extractable organics, 60 ppb for base/neutral-extractable organics, 50 ppb for volatile organics, and 75 ppb for heavy metals. These targets apply to each individual pollutant in a group, not to the sum of the concentrations of each pollutant in the group.

Each GPC was examined to see what, if any, treatment would be required to meet the targets proposed for both BAT and PSES. For the BAT regulation, the concentration of each pollutant proposed for BAT regulation that was found in the 1980 run BPT system effluent was compared to the new target concentration to determine if further treatment would be required. The effluent heavy metal concentrations from biological treatment systems calculated in the 1980 runs were reduced by 18 to 69 percent for individual metals to reflect removals which the 1980 runs had not calculated. For the PSES regulation, the concentration of each priority pollutant proposed for PSES regulation that was found in the 1980 run raw waste stream of each GPC was compared with the new target concentration. Treatment was required whenever the GPC pollutant concentrations exceeded one or more of the new targets.

If additional treatment was found necessary, the 1980 treatment systems were modified until the revised targets were met. Since the pollutants proposed for regulation under BAT and PSES differ (see Sections IX and XI), the systems

selected for some individual GPCs differ for the two regulations. The following guidelines were followed in adjusting the 1980 treatment trains:

- No unit sizes were changed and no units were added. The time available did not suffice for performing the necessary engineering evaluations.

- Treatment units treating only pollutants no longer exceeding the revised targets after BPT were removed.

- Whenever pollutants met the target concentrations through the dilution that occurred when multiple waste streams were combined before discharge, treatment units that only treated segregated streams were deleted.

- Since the metals target concentrations were normally met by coagulation/flocculation, ion exchange units following coagulation/flocculation units were removed except where several metals were present in excessive concentrations.

- Final filters, second stage activated sludge, and other "polishing" units were removed if the Agency judged that the remaining units alone would meet the targets.

- Downstream units were removed when upstream concentrations met the new targets.

- In some cases, units had been included erroneously or were shown by influent and effluent concentrations of the unit to be ineffective in removing pollutants that exceeded the new targets. Those units were removed.

- Many of the units in the treatment trains, such as clarifiers and dual media filters, had only protected subsequent units. Such units were removed whenever the units they had protected were removed.

The total capital cost for each GPC was the sum of two components: the capital costs directly associated with each treatment unit and the miscellaneous capital costs. These miscellaneous capital costs reflected the number of and sizing of total treatment units in the train and the power requirements of each unit. From a regression of miscellaneous capital costs on those total capital costs that are directly associated with all the treatment units for the 1980 BAT treatment systems, miscellaneous capital costs were estimated as 0.237 times the total directly associated capital cost, plus $85,000 (Third Quarter, 1977).

TABLE VIII-1 lists the BAT and PSES treatment costs that were produced by modifying as described above the treatment costs for each GPC that had been generated in the 1980 runs. For each GPC, Table VIII-1 lists the production, wastewater flow, capital and annual costs for both the BAT and PSES treatment systems, and the technologies used by the Model for BAT and PSES treatment. The annual cost is the sum of O&M costs and the amortized capital cost. The treatment technology abbreviations are explained in the footnotes to the Table.

Estimating Compliance Costs for Each Establishment. As noted above, the 55 GPCs for which compliance costs had been estimated incorporated 176 major OCPSF manufacturing product/processes. The manufacturing plants (establishments) in OCPSF fall into three groups: plants having only product/processes that are included in the 176, plants having some product/processes included in the 176 and some not included, and plants with no product/processes included in the 176. For both BAT and PSES, the total compliance cost for all product/processes was estimated at each plant (establishment) by aggregating and, where necessary, extrapolating the compliance costs estimated for the individual GPCs, as described next.

For most establishments, total product/process wastewater flow was known from either 308 Questionnaires or NPDES discharge permits. Where the flow for the whole establishment or some of its product/processes was not known, flow was estimated from the Agency's equations relating wastewater flow to sales volume. These equations that had been developed from sales data and 308 Questionnaire flow data for 261 establishments.

For each establishment with known total wastewater flow and some or all manufacturing product/processes outside the 176 product/processes covered by the GPCs, the portion of the total wastewater flow attributable to product/processes outside the 176 was calculated using:

(Total Flow) = (Flow Covered by GPCs) + (Flow Not Covered by GPCs),

where the first and second terms are known.

The compliance costs at each establishment for the flow not covered by the 176 product/processes in the GPCs were then estimated from the Agency's equations relating compliance cost to wastewater flow. These equations had been developed from cost and flow estimates calculated for the 55 GPCs. The total compliance cost at each establishment was then:

(Total Cost) = (Cost for Flow Covered by GPCs) +
(Cost for Flow Not Covered by GPCs)

Estimating Compliance Costs for the Whole OCPSF Industry. The estimated costs for the whole OCPSF industry to comply with the proposed regulations were then calculated by summing the individual establishment costs estimated above for all direct dischargers for BAT and for all indirect dischargers for PSES. The total number of establishments for this estimate was 1479; 566 were directs, 913 were indirects. About 19 percent of the wastewater flow at these indirect dischargers was disposed as an "other" discharge (neither direct nor

TABLE VIII-1

REVISED BAT AND PSES TREATMENT COSTS FOR EACH GPC

GPC #	Model GPC Production (1000 Lbs/ Day)	BAT TREATMENT		PSES TREATMENT			TECHNOLOGY BASIS	
		Capital Cost ($1000; 1977 $)	Annual Cost ($1000/yr; 1977 $)	Capital Cost ($1000; 1977 $)	O & M Cost ($1000; 1977 $)	Model Flow (MGD)	BAT (Direct)	PSES (Indirect)
500	3700	947	315	4721	908	0.400	CNF, CLR, STR, CNF	NEU, GRS, DAF, EQU, NUT ASL, AER, CLR, DMF, SHS
501	7700	1291	2095	6422	1261	1.412	CNF, STR	NEU, GRS, DAF, EQU, NUT, ASL, AER, CLR, SHS
502	13140	1368	810	16958	4009	2.404	CNF	DMF, DPW, EQU, NUT, OSP, NUT, ASL, AER, CLR, SHS, CNF
503	7785	1854	3674	23900	4166	12.040	STR,SPS	GRS, DAF, DMF, EQU, NEU, NUT, ASL, AER, CLR, SHS
504	4315	1296	421	2849	890	0.154	OSP, DMF, CNF, CLR, STR	NEU, GRS, DAF, EQU, NUT, ASL, AER, CLR, DMF, CON SHS
505	4125	389	115	5134	1198	0.909	CNF	NEU, EQU, NUT, ASL, AER, CLR, SHS
506	14365	656	130	18888	5222	6.183	CNF	DMF, DPW, STR, EQU, NEU, NUT, ASL, AER, CLR, SHS, CNF
507	815	4487	1060	3505	823	0.289	EQU, NEU, NUT, ASL, AER, CLR, DMF, SHS, IEX	EQU, NEU, NUT, ASL, AER, CLR, DMF, SHS
508	3140	12001	4557	10540	4318	5.099	ACR, IEX	ACR
509	4050	689	161	674	202	0.071	STR, IEX	GRS, DAF, STR

TABLE VIII-1 (continued)

GPC #	Model GPC Production (1000 Lbs/ Day)	BAT TREATMENT		PSES TREATMENT			TECHNOLOGY BASIS	
		Capital Cost ($1000; 1977 $)	Annual Cost ($1000/yr; 1977 $)	Capital Cost ($1000; 1977 $)	O & M Cost ($1000; 1977 $)	Model Flow (MGD)	BAT (Direct)	PSES (Indirect)
510	3850	1599	315	603	148	0.934	IEX, DMF	CLR, DMF, STR
511	150	1456	963	2940	1545	0.051	CNF, CLR, STR, SPS, DMF	EQU, NEU, NUT, ASL, AER, CLR, ASL, AER, CLR, DMF, SHS, CNF, CLR, STR, SPS, DMF
512	5150	2487	3103	5501	3796	1.748	CNF, CLR, STR	CNF, CLR, STR, IEX, SHS
513	1925	637	233	3347	945	0.597	STR	STR, EQU, NEU, ASL, AER, NUT, CLR, SHS
514	375	0	0	1121	294	0.050		EQU, NEU, ASL, AER, CLR, DMF
515	1000	0	0	431	120	0.077		STR
516	375	588	191	3477	971	0.144	IEX, DMF, IEX	OSP, DMF, NEU, EQU, NUT, ASL, AER, CLR, ASL, AER, CLR, SHS
517	900	4534	4565	4534	4565	1.881	STR, ACR, SHS	STR, ACR, SHS
518	1985	1054	215	26982	13259	9.401	CNF, CNF	CNF, CNF, EQU, NEU, NUT, ASL, AER, CLR, ASL, AER, CLR, SHS
519	225	0	0	0	0	0.051		
520	95	300	92	3659	951	0.427	CNF	EQU, NEU, NUT, ASL, AER, CLR, SHS

TABLE VIII-1 (continued)

GPC #	Model GPC Production (1000 Lbs/ Day)	BAT TREATMENT		PSES TREATMENT			TECHNOLOGY BASIS	
		Capital Cost ($1000; 1977 $)	Annual Cost ($1000/yr; 1977 $)	Capital Cost ($1000; 1977 $)	O & M Cost ($1000; 1977 $)	Model Flow (MGD)	BAT (Direct)	PSES (Indirect)
521	975	2774	456	2774	457	2.471	STR, CNF, CLR, IEX	STR, CNF, CLR, IEX, IEX
522	175	1067	211	3003	808	0.239	DMF, IEX	EQU, NEU, NUT, ASL, AER, CLR, SHS
523	1375	26	80	2728	806	0.193	CNF	EQU, NEU, NUT, ASL, AER, CLR, SHS, CNF
524	1800	984	775	6094	1587	0.819	STR	EQU, NEU, NUT, ASL, AER, CLR, SHS
525	2880	62	51	3443	889	0.671	CNF	EQU, NEU, NUT, ASL, AER, CLR, SHS
526	3690	0	0	26424	7490	3.923		EQU, NEU, CNF, DMF, NUT, ASL, AER, CLR, ASL, AER, CLR, SHS
527	4750	326	94	11491	2630	4.068	CNF	EQU, NEU, NUT, ASL, AER, CLR, DMF, SHS
528	975	0	0	0	0	4.281		
529	3550	1576	171	14333	4505	1.926	IEX	OZO, OZO, CNF, EQU, NEU, NUT, ASL, AER, CLR, ASL, AER, CLR, SHS
530	50	957	265	957	265	0.090	CLR, DMF, STR	CLR, DMF, STR
531	100	405	168	845	233	0.162	ASL, AER, NUT CLR	CLR, DMF, STR

TABLE VIII-1 (continued)

GPC #	Model GPC Production (1000 Lbs/ Day)	BAT TREATMENT		PSES TREATMENT			TECHNOLOGY BASIS	
		Capital Cost ($1000; 1977 $)	Annual Cost ($1000/yr; 1977 $)	Capital Cost ($1000; 1977 $)	O & M Cost ($1000; 1977 $)	Model Flow (MGD)	BAT (Direct)	PSES (Indirect)
532	190	958	320	1049	338	0.550	CLR, DMF, STR	CLR, DMF, STR
533	210	0	0	0	0	0.315		
534	300	5660	1201	1061	219	0.664	NTR, DNT, STR, SHS, DMF, CLR, AER, SHS, CLR, CLR	CLR, DMF, STR
535	15	0	0	1349	562	0.003		CLR, ASL, CNF
536	150	524	195	3888	1079	0.102	CNF	EQU, NEU, CLR, NUT, ASL, AER, CLR, DMF, SHS
537	60	329	138	0	0	0.054	CNF	
538	350	0	0	0	0	1.286		
539	440	3342	1020	5773	1761	0.151	ACR	EQU, NEU, CLR, DMF, NUT, ASL, AER, CLR, ACR, SHS
540	350	0	0	0	0	0.059		
541	520	577	185	0	0	0.054	CNF, CLR, DMF, STR	
542	480	0	0	14777	3655	2.214		EQU, NEU, CLR, NUT, ASL, AER, CLR, ASL, AER, CLR, DMF, SHS

TABLE VIII-1 (concluded)

GPC #	Model GPC Production (1000 Lbs/ Day)	BAT TREATMENT		PSES TREATMENT			TECHNOLOGY BASIS	
		Capital Cost ($1000; 1977 $)	Annual Cost ($1000/yr; 1977 $)	Capital Cost ($1000; 1977 $)	O & M Cost ($1000; 1977 $)	Model Flow (MGD)	BAT (Direct)	PSES (Indirect)
543	85	527	131	0	0	0.112	STR, DMF	
544	1320	2009	6317	14292	9868	3.264	STR, SPS	EQU, NEU, NUT, ASL, AER, CLR, SHS, STR
545	955	2970	325	17739	5475	4.642	DMF, IEX	NEU, EQU, CNF, CLR, ASL, AER, NUT, CLR, SHS
546	950	156	82	0	0	0.106	CNF	
547	240	0	0	0	0	0.153		
548	320	414	159	0	0	0.458	IEX	
549	150	379	80	0	0	0.073	STR	
550	450	1026	524	1712	465	1.500	STR, CNF	CNF, DMF, SHS
551	70	0	0	2861	1769	0.052		DMF, SPS, CHX, EQU, NEU, NUT, ASL, AER, CLR, CON, SHS
552	330	447	169	608	144	0.276	ASL, AER, CLR, NUT	DMF, STR
553	320	0	0	0	0	0.876		
554	210	0	0	0	0	1.442		

FOOTNOTES FOR TABLE VIII-1

TREATMENT PROCESS ABBREVIATIONS

EQU	Equalization
NEU	Neutralization
OSP	Oil Separation
DAF	Dissolved Air Flotation
CNF	Coagulation and Flocculation
CLR	Clarification
DMF	Dual Media Filtration
ASL	Activated Sludge
AER	Aeration
NUT	Nutrient Addition
NTR	Nitrification
DNT	Denitrification
OZO	Ozonation
ACA	Activated Carbon Adsorption
ACR	Activated Carbon Regeneration
IEX	Ion Exchange
SHS	Sludge Handling Systems
	Thickening
	Aerobic Digestion
	Vacuum Filtration
	Landfill
	Incineration
SPS	Special Systems
	Ammonia Stripping
	Distillation or Evaporation
	Incineration
	Solvent Extraction
	Cooling/Heat Exchange
STR	Steam Stripping
GRS	Gravity Separation
DPW	Deep Well
CON	Contract Haul
CHX	Chemical Oxidation

indirect). The estimated costs for treating this portion of the flow were deleted from the PSES compliance costs.

The resulting estimated costs are presented in Section IX for BAT and Section XI for PSES. A capital recovery factor of 0.22 was used to amortize capital costs to annual costs. The total annual costs are the sum of the annual operating and maintenance cost and the amortized capital cost. The costs given are in first quarter 1982 dollars. The details of the entire cost estimating procedure are presented in EPA's Economic Analysis of Proposed Effluent Standards and Limitations for the Organic Chemicals and Plastics, Synthetics, and Fibers Industry, EPA 440/2-83-004, which accompanies the proposed OCPSF regulations.

EVALUATION OF NON-WATER QUALITY CONSIDERATIONS

General

The elimination or reduction of water pollution may aggravate other environmental problems. Sections 304(b) and 306 of the Clean Water Act require the Agency to consider the non-water quality environmental impacts of these proposed regulations. In compliance with these provisions, the Agency has considered the effect of this regulation on energy consumption, air pollution, solid waste generation, and noise generation. There is no precise methodology for balancing changes in water pollution, air pollution, energy consumption, and noise and solid waste generation. The methods used to evaluate the non-water quality impacts of the proposed regulations are discussed below. Conclusions from the evaluations of the non-water quality impacts of the proposed BAT, NSPS, and Pretreatment limitations are presented in Sections IX, X, and XI, respectively.

Energy Consumption

The Organic Chemicals and Plastics/Synthetic Fibers (OCPSF) Industries use large amounts of energy in manufacturing processes. Industrial organic chemicals, SIC 2869, was the third largest energy-consuming industry by SIC code in 1980, using 1,005.9 trillion BTUs. For 1980, OCPSF energy consumption data are presented in TABLE VIII-2. The OCPSF Industries consumed a total of 1,529.3 trillion BTUs in 1980.

The Agency has not completed a formal analysis of the impacts on energy consumption resulting from implementation of the proposed effluent limitations, but will before promulgating the final regulations. The Agency's preliminary assessment of the impact of each of the proposed limitations on energy consumption is presented in Sections IX, X, and XI.

Air Pollution

Some treatment processes that OCPSF plants may use to meet the proposed BAT limitations can release air pollutants to the atmosphere as discussed below.

Certain treatment processes in which vapor condensation and collection is difficult or impractical may release volatile materials. If improperly

TABLE VIII-2

1980 ENERGY CONSUMPTION IN THE ORGANIC CHEMICALS AND PLASTICS/SYNTHETIC FIBERS INDUSTRIES

INDUSTRY BY SIC CODE	ELECTRIC ENERGY Purchased Quantity (million kWh)	ELECTRIC ENERGY Purchased Cost (million dollars)	ELECTRIC ENERGY Net (b) Generated	PURCHASED FUELS (a) Quantity (trillion BTUs)	PURCHASED FUELS (a) Cost (million dollars)	TOTAL PURCHASED FUELS AND ELECTRIC ENERGY Quantity (trillion BTUs)	TOTAL PURCHASED FUELS AND ELECTRIC ENERGY Cost (million dollars)
Organic Chemicals							
2865	5,391.7	161.0	78.4	133.7	394.0	152.1	555.0
2869	25,581.9	773.2	5,263.0	918.6	1,765.5	1,005.9	2,538.7
Total	30,973.6	934.2	5,341.4	1,052.3	2,159.5	1,158.0	3,093.7
Plastics/Synthetic Fibers							
2821	11,885.3	378.8	272.5	146.8	389.0	187.3	767.9
2823	492.9	14.1	1,008.4	54.9	84.8	56.6	98.9
2824	7,141.5	210.0	524.4	103.0	247.5	127.4	457.5
Total	19,519.7	602.9	1,805.3	304.7	721.3	371.3	1,324.3
TOTAL	50,493.3	1,537.1	7,146.7	1,357.0	2,880.8	1,529.3	4,418.0

SOURCE: Bureau of the Census 1982

(a) Purchased fuels include fuel oil (distillate and residual); bituminous coal, lignite, and anthracite; natural gas; and liquified petroleum gases.

(b) Electric energy generated by the establishment minus the quantity sold or transferred to other establishments.

One Kwh = 3413 BTU

designed and maintained, landfills used for the disposal of solids and of skimmable material can also emit volatile compounds. Because air emissions depend on the nature and concentration of the volatile components, weather conditions at the treatment or disposal site, and the specific treatment technologies, air pollution emissions for the entire industry can only be estimated qualitatively.

Incineration of concentrated organic waste streams and sludges may release particulates, hydrocarbons, and other noxious gases to the atmosphere. Air emissions from incineration can be minimized by accurately controlling combustion time and temperature and by the installation of scrubbers. Scrubbers reduce the release of air pollutants by capturing gaseous combustion products. Incineration of sludges containing heavy metals often emits volatilized heavy metals.

The Agency recently evaluated the potential for generation of air pollution from water pollution control practices for the chlorinated organic solvents industry, a segment of the Organic Chemicals Industry (USEPA 1981). This evaluation was part of the Toxics Integration Project's attempt to develop cost-effective strategies for multi-media toxic pollutant control. One of the conclusions was that air emissions from water pollution control equipment and from surface waters can be a major source of toxic air pollution and can create a health risk because many of the pollutants generated by this industry segment are highly volatile. The analysis also revealed that in some cases the addition of certain water pollution control equipment may increase emissions of volatile pollutants and increase slightly the health risk generated near these production plants. However, the installation and proper operation of other technologies, such as steam stripping, can eliminate this source of air pollution and cost-effectively reduce risk. The report cautions that the results for the chlorinated organic solvents industry should not be generalized to the entire Organic Chemicals Industry, since solvents plants typically produce and handle greater amounts of volatile chemicals than other segments of the Organic Chemicals Industry.

Solid and Hazardous Waste Generation

Solid Waste. TABLE VIII-3 presents Bureau of the Census data on 1980 solid waste generation and disposal in the OCPSF Industries. OCPSF plants disposed of approximately 5.75 million short tons of solid waste in 1980. Included in this figure is the solid waste generated by water pollution abatement facilities. Water pollution abatement solid wastes include sludges and residues from both biological treatment (e.g., waste activated sludge) and physical-chemical treatment (e.g., lime precipitate). The Census survey did not differentiate between dry and wet weight when the data was gathered.

The Agency has considered the effect of the proposed regulations on the generation of solid waste, including hazardous waste as defined under Section 3001 of the Resource Conservation and Recovery Act (RCRA). A formal analysis of solid waste generation has not yet been completed. The Agency's preliminary assessment of the impact of each proposed limitation on solid waste generation is presented in Sections IX, X, and XI.

TABLE VIII-3

1980 SOLID WASTE GENERATION AND DISPOSAL IN THE ORGANIC CHEMICALS AND PLASTICS/SYNTHETIC FIBERS INDUSTRIES (a)

INDUSTRY BY SIC CODE	QUANTITY REMOVED(b) (Thousands of short tons)	CAPITAL COST (Millions of dollars	OPERATING COST (Millions of dollars)	COST RECOVERED (c) (Millions of dollars)
Organic Chemicals				
2865	596.1	NR(d)	24.0	0.8
2869	3,148.6	46.6	118.6	10.1
Total	3,744.7	-	142.6	10.9
Plastics/Synthetic Fibers				
2821	1,040.3	7.1	32.2	4.7
2823	199.7	NR	NR	-
2824	763.0	NR	NR	-
Total	2,003.0	NR	NR	-
TOTAL	5,747.7	-	-	-

SOURCE: Bureau of the Census 1981

(a) Solid waste includes garbage, trash, sewage sludge, dredged spoil, incinerator residue, wrecked or discarded equipment, biological and chemical wastes, radioactive and other toxic materials, and solid waste produced as a result of air and water pollution abatement.

(b) Defined as waste properly disposed of in 1980.

(c) Estimate of (1) the value of materials or energy reclaimed through abatement activities that were reused in production, and (2) revenue that was obtained from the sale of materials or energy reclaimed through abatement activities.

(d) NR: Data withheld to avoid disclosing operations of individual companies.

One short ton = 2000 pounds.

Hazardous Wastes. Many of the materials identified in the waste streams of OCPSF plants are "hazardous wastes" as defined by EPA regulations (40 CFR Part 261) promulgated under the authority of the Resource Conservation and Recovery Act (RCRA) of 1976 (42 USC Section 6901 et seq.). The storage, transport, treatment, and disposal of hazardous wastes are regulated under RCRA standards (40 CFR Parts 122 and 262 to 267). Since many heavy metals and high molecular weight organic compounds tend to adsorb to biological and chemical solids, wastewater treatment sludges would be expected to contain many of the hazardous wastes found in the untreated OCPSF wastewaters. RCRA regulations, therefore, may effect the disposal of solid wastes generated as a result of BAT limitations.

OCPSF hazardous waste generators that transport hazardous wastes for offsite treatment, storage, or disposal, or that contract for removal and disposal of hazardous wastes, are subject to the provisions of 40 CFR 262. Transportation regulations include standards for preparation of a manifest before transporting the waste offsite, packaging and labeling, and record-keeping and reporting. The receiver of the wastes is responsible for meeting treatment, storage, and disposal requirements.

OCPSF plant operators that transport their hazardous wastes are subject to compliance with the manifest system and record-keeping provisions of the regulation (40 CFR Part 263).

OCPSF generators that treat, store, or dispose of hazardous wastes onsite (including end-of-pipe systems, deepwells, incineration followed by scrubbing, evaporation ponds, and land disposal) must comply with the standards for owners and operators of hazardous waste treatment, storage, and disposal facilities set forth in 40 CFR 264, 265, and 266, and must obtain a permit as required in 40 CFR 122.

Noise Generation

The Organic Chemicals and Plastics/Synthetic Fibers Industries have not been identified by EPA as being significant sources of noise pollution.

REFERENCES

BUREAU OF THE CENSUS. 1981. Pollution Abatement Costs and Expenditures, 1980, MA-200(80)-1. U.S. Department of Commerce. U.S. Government Printing Office, Washington, D.C.

BUREAU OF THE CENSUS. 1982. 1980 Annual Survey of Manufacturers, Fuels and Electric Energy Consumed, Industry Groups and Industries, M80(AS)-4.1. U.S. Department of Commerce. U.S. Government Printing Office, Washington, D.C.

CATALYTIC, INC. 1980. Computerized Wastewater Treatment Model. Technical Documentation. Prepared for the U.S. Environmental Protection Agency.

NATIONAL COMMISSION ON WATER QUALITY (NCWQ). 1975. Staff Draft Report--National Commission on Water Quality Report to Congress, Washington, D.C.

U.S. ENVIRONMENTAL PROTECTION AGENCY (USEPA). 1981. An Industry Approach for the Regulation of Toxic Pollutants. Prepared for Toxics Integration Project. Prepared by Putnam, Hayes, and Bartlett, Inc., Cambridge, Massachusetts.

U.S. ENVIRONMENTAL PROTECTION AGENCY (USEPA). Multi-Media Environmental Goals for Environmental Assessment, Industrial Environmental Research Laboratory, Research Triangle Park, North Carolina, 1977.

SECTION IX

EFFLUENT QUALITY ATTAINABLE THROUGH THE APPLICATION OF THE BEST AVAILABLE TECHNOLOGY ECONOMICALLY ACHIEVABLE

INTRODUCTION

Under Section 301(b)(2)(A) of the Clean Water Act, EPA must develop, and existing dischargers in the Organic Chemicals and Plastics/Synthetic Fibers Industries subsequently must comply with, effluent limitations which require application of the best available technology economically achievable (BAT). According to Section 304(b)(2)(B) of the Clean Water Act, all of the following factors must be considered in developing BAT:

- The age of equipment and facilities involved.
- The production processes employed.
- The engineering aspects of the application of various types of pollution control techniques.
- Process changes.
- The cost of achieving effluent wasteload reductions.
- Non-water quality environmental impacts (including energy requirements).

In regulations addressing the development of BAT, the following legal principles apply:

- In contrast to BPT, BAT does not reflect an average of the best performances within an industrial category, but reflects the best control and treatment technology within the industrial subcategory.
- BAT limitations may reflect product/process changes and plant management and operation practices that help reduce pollutant discharges.
- Where existing treatment practices in an industry are inadequate, if a technology has been shown effective on similar wastewaters in another industry, such technology may be "transferred" to and identified as BAT technology for the industry being addressed.
- Best available technology may be the highest degree of control technology that has been achieved or has

been demonstrated for plant scale operation up to and including "no discharge" of pollutants.

This section discusses the Agency's development of BAT effluent limitations for the Organic Chemicals and Plastics/Synthetic Fibers Industries. After explaining the type of effluent limitations chosen, this section describes the BAT limitation development procedure, presents the proposed limitations, and summarizes the estimated wasteload reduction benefits and the costs of these limitations.

LIMITATION TYPE

General

Effluent limitations may be specified as mass limitations, separate concentration and flow limitations, or simple concentration limitations. BAT limitations may be set not only for the priority pollutants, but also for toxic non-priority pollutants and nonconventional pollutants. As noted in Section VI, the Agency is not proposing limitations on toxic non-priority pollutants and nonconventional pollutants. This section discusses the Agency's rationale for choosing to set concentration-based limitations.

Mass Limitations

EPA prefers setting mass limitations, where feasible, since mass limitations encourage flow reduction and prevent the substitution of dilution for treatment. Mass can be limited directly by mass limitations (e.g., pounds per day) or indirectly by simultaneous limitations on the discharge flow rate (e.g., millions of gallons per day, mgd) and concentration (e.g., milligrams per liter, mg/ℓ), since flow rate times concentration equals mass discharge rate.

In industries such as the iron and steel industry, where the processes used to manufacture a specific product at a specific plant do not change significantly from one day of production to the next and where most plants use the same or similar processes for manufacturing a specific product, setting national limitations on the mass of pollutants discharged per unit (e.g., pound) of product manufactured is an efficient way to regulate the discharge of pollutants by the industry. As explained in earlier sections of this report, however, the processes used in the Organic Chemicals and Plastics/Synthetic Fibers Industries to manufacture a specific product may differ significantly both between different plants on the same day and at the same plant on different days. To set a discharge limit on the mass of pollutant discharged per unit of product manufactured in each OCPSF plant's discharge permit, the Agency would need information on the types and quantities of pollutants created by each of the processes used to manufacture each product, and the permit writer would need to know not only what days the plant manufactures each product, but also how long the plant uses each of the several processes available for manufacturing that product. From its experience in gathering product/process wasteload information and in writing and enforcing permits, the Agency recognizes that gathering all the necessary information would be a monumental task. For this reason, the Agency has concluded that setting

limitations on the mass of pollutant discharged per unit of product manufactured for the OCPSF industries is infeasible.

Concentration Limitations

The OCPSF raw wastewater data collection studies described in Section V yielded much information on the ranges of each pollutant generally found in product/process effluents and in combined waste streams before end-of-pipe treatment. Most of the end-of-pipe control technologies described in Section VII do not reduce the influent concentration by a fixed percentage, but are controlled by pollutant concentration gradients and therefore yield a similar effluent concentration over a wide range of influent concentrations under standard, cost-effective design criteria. For example, a good activated sludge plant will usually discharge 20 to 40 mg/ℓ of BOD whether the influent BOD concentration is 100 mg/ℓ or 500 mg/ℓ, if the plant is well designed and the design loadings are not exceeded. Similarly, activated carbon adsorption of an organic pollutant will usually produce a fairly constant effluent concentration over a wide range of influent concentrations as long as the contact time is adequate and the carbon capacity has not been exhausted.

From its OCPSF data collection studies, EPA knows the typical product/process raw waste stream concentration range for each pollutant to be regulated. Since the treated wastewater concentration produced by the sequence of first treating the individual product/process waste streams and then treating the combined waste streams at an end-of-pipe treatment facility is relatively uniform over most of these ranges, the Agency can specify an achievable effluent concentration reflecting the performance of the treatment technology over this range of product/process waste stream concentrations. Limitations for all the pollutants that have been regulated in a subcategory will be written into the permit of each plant in that subcategory. Knowing the plant's total process wastewater flow, the writer of the NPDES permit for the plant can impose on the plant both the Agency's effluent concentration limitation for each pollutant and a total process wastewater flow limitation. Even without knowing either the specific product/process wasteload characteristics or the temporal variations in the plant's product/process mix, the writer can thereby set a plant mass discharge limitation (e.g., pounds per day) for each regulated pollutant. Monitoring requirements at each specific OCPSF plant will only address those pollutants that are likely to be detected at the individual plant.

BAT SELECTION

General

As discussed in Section III, each plant in the Organic Chemicals and Plastics/Synthetic Fibers industrial categories uses a variable array of product/processes to produce not only a unique and varying mix of products but also a unique raw wastewater containing varying concentrations of different toxic pollutants. Water use varies among product/processes at each plant and among plants for each product/process. Two manufacturers producing the same product via the same process sometimes discharge equal flows per unit of

production, but often one plant will have as much as 30 times the flow per unit of production as another plant (R. Roegner, 1982). Similar variations between plants have been found in the masses and concentrations of individual toxic pollutants discharged from the same product/processes, since different plants practice different degrees of water conservation and recycling.

As noted in Section VII, the predominant end-of-pipe wastewater treatment technologies employed by the industry are equalization, neutralization, sedimentation, and biological treatment, preceded by a variety of in-plant controls (e.g., reuse of individual product/process waste streams) and physical/chemical treatment (e.g., steam stripping, carbon adsorption, and chemical precipitation) of specific product/process wastestreams. The extent of waste stream reuse or waste product recovery ahead of biological treatment depends on plant operating economics, including the specific product/processes used at the plant and their raw waste loads. At many OCPSF plants, prior to waste stream comingling and final treatment at the end-of-pipe biological system, specific waste streams or groups of waste streams are treated to protect the biological system from toxic pollutants which could inhibit or upset the biological treatment processes. Many plants practice in-plant treatment simply to reduce environmental discharges of toxic pollutants. Over one-third of the plants also have treatment after the biological system (e.g., polishing ponds and filtration) to further reduce discharges of solids.

As noted in Section VI, virtually all of the priority pollutants are detected consistently in the untreated combined wastewaters of the OCPSF industries. Even after well-operated biological treatment (as defined by 95% BOD removal or greater or BOD effluent concentration of less than or equal to 50 mg/ℓ), the waste stream concentrations of many priority pollutants are significant and treatable at many OCPSF plants.

The subsections below describe the Agency's approach to developing BAT limitations for this industry and present the limitations selected.

Alternative Approaches to Developing BAT Limitations

General. Since significantly different combinations and concentrations of priority pollutants are found at different OCPSF manufacturing plants, no single BAT pollutant control and treatment technology is adequate to address this entire industry; BAT is plant-specific. As noted above, some of the controls or technologies used at OCPSF plants to reduce waste stream concentrations of priority pollutants are installed specifically to reduce priority pollutant discharges; others are installed to protect biological treatment systems from toxic chemical interference and thereby facilitate compliance with discharge limitations on conventional pollutants (e.g., BPT limitations). For this industry, therefore, it is inappropriate to classify any particular technology as a "priority pollutant control" technology for protecting biological systems or as a "BAT technology" for reducing priority pollutant discharges, since the reason for using the particular technology may differ at different OCPSF plants.

Each plant controlling priority pollutant discharges may employ different combinations of controls and treatment technologies (and, in some instances, dilution) to achieve the desired reduction of pollutant mass or

concentration. The development of BAT limitations on a given pollutant, therefore, must reflect effluent qualities attainable using reasonable combinations of appropriate controls and technologies at different plants, rather than all the applications of a particular control technology at all plants.

Computer Model Evaluation of GPCs. One method for developing technology-based BAT effluent limitations is to set several alternate sets of target effluent concentrations, identify plant-specific technologies (for either all existing plants, a representative sample of existing plants, or a representative group of hypothetical plants) that can achieve these effluent concentrations, and estimate the costs and economic impacts to the entire industry of achieving each set of levels. The Agency has used a computer model (described in Section VIII) to perform this comparison for 55 hypothetical plants, known as "generalized plant configurations" or GPCs. The model uses information collected on 176 product/processes in the 37 plant Verification program to simulate pollutant loadings and to calculate investment and operating costs for the GPCs. EPA conservatively estimated compliance costs for real plants from these results. The Model's generalized design parameters do not always allow specification of the lowest-cost system capable of achieving a given set of effluent concentrations. The Model has not yet been adequately validated for use in developing effluent limitations. EPA is further evaluating this Model for use in determining the performance of treatment technologies.

Performance of Existing Plants. The Agency has decided that the best way to develop the proposed BAT effluent limitations for this industry with the available data is to specify effluent concentrations that reflect the performance of the existing well-designed and well-operated OCPSF treatment plants in the Agency's database. The details of this development are presented in the next section.

Derivation of Limitations

Overview. The Agency calculated numerical effluent concentration limitations by statistically analyzing the priority pollutant concentrations in the effluents from the treatment plants that it had classified as well-designed and well-operated in its OCPSF database. EPA reviewed the wastewater analysis procedures used for each data point and deleted all questionable effluent data (see Appendix C). For each of the priority pollutants, the valid effluent data from each of the well-designed and well-operated plants were then tabulated and the in-plant and end-of-pipe treatment systems used at each plant were noted. The Agency then dropped the data from those plants where, in EPA's judgment, the treatment train did not represent best available treatment for the priority pollutant being addressed. The data from the remaining plants were evaluated statistically to yield daily maximum and four-day average effluent concentration limitations. Each of these steps are described below. The details of the review of analytical data are given in Appendix C; the details of the statistical development of the limitations are given in Appendix F.

Revised and Final BAT Databases. The development of the final BAT database is displayed in FIGURE IX-1 and explained below.

FIGURE IX-1

DEVELOPMENT OF FINAL BAT DATABASE

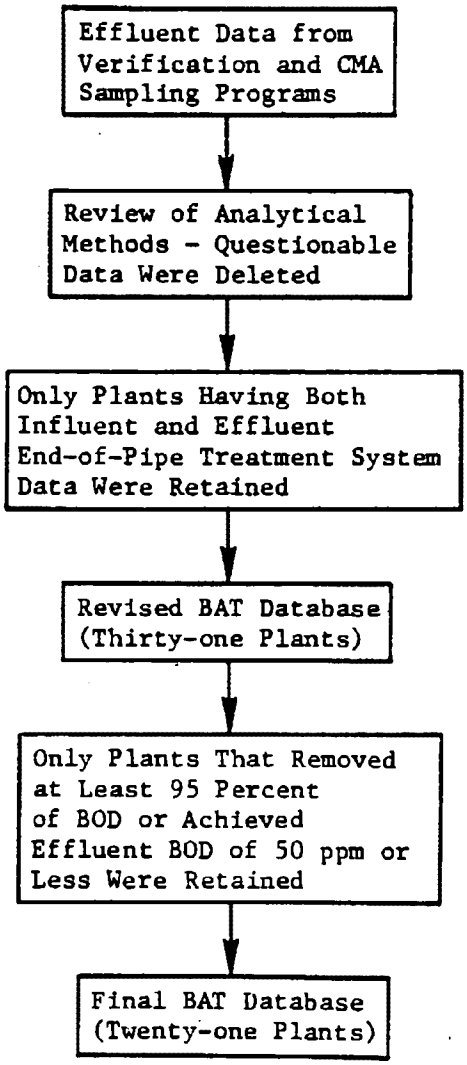

As described in Section V, the complete OCPSF database consists of the data gathered in the Screening Phase I, Screening Phase II, Verification, and CMA Five-Plant studies described in Section V. As described in Appendix C, because of the analytical methodologies used and the protocols followed, the precision and accuracy of the data from the two Screening phases are appropriate only for qualitative application. These data were used in Section IV for the subcategorization analysis and in Section VI to indicate the frequency of occurrence of individual priority pollutants in OCPSF wastestreams. Because more stringent analytical methods and quality assurance/quality control (QA/QC) procedures had been employed in the Verification and CMA studies, data from these studies were used to develop numerical BAT effluent limitations. The Verification and CMA study methods and data were reviewed as explained in Appendix C; organic priority pollutant data from plants and samples where improper methods had been employed were deleted. This editing deleted all of the organic priority pollutant data for six of the Verification plants; heavy metals data from these plants was not deleted.

After the data editing had been performed, Verification plants that did not have data for both influent to and effluent from the end-of-pipe treatment system were deleted. This removed a total of nine plants from the BAT Verification database for the following reasons: three indirect dischargers had no effluent data; one indirect discharger had no influent data; one direct discharger had no end-of-pipe treatment plant influent data; one indirect discharger had no end-of-pipe treatment plant influent data; and three plants were neither direct nor indirect dischargers. The product of this step was the Agency's revised BAT database.

EPA's revised BAT database consists of three days of data from each of 26 Verification plants and six to 25 days of data from each of five plants sampled in the CMA Five-Plant Sampling Program. Two plants were sampled in both studies, so the revised database included 31 plants. These plants differ in product/process mix, pollutants discharged, and the combination of process controls and wastewater technologies used to control priority pollutants.

EPA used the data from only the well-designed and well-operated plants in this revised database in calculating the proposed BAT limitations. As explained in the OCPSF BPT Development Document accompanying this BAT document, the Agency defined well-designed and well-operated OCPSF treatment plants as those that removed an average of at least 95 percent of the influent BOD or achieved an average effluent BOD concentration of 50 mg/ℓ. This final BAT database included 21 plants, all direct dischargers. Nineteen of the plants employ biological treatment, while two (both Verification, Not Plastics-Only plants) employ only physical-chemical treatment. Four of the plants are in the CMA study -- CMA Plant Number 2 was deleted because none of the effluent values exceeded 10 ppb, making the estimation of variability impossible. Nineteen plants are in the Verification study and two are in both. All four of the CMA plants are in the proposed Not Plastics-Only category; the only plants in the Plastics-Only category are three of the Verification plants. Only heavy metals data (no organic priority pollutant data) was used from two of the plants sampled only during Verification -- one Plastics-Only plant with biological treatment and one Not Plastics-Only plant with only physical-chemical treatment.

For each pollutant, the limitations were calculated using only the data from those final BAT database plants that use technologies appropriate to BAT for the pollutant.

As explained subsequently, long-term median effluent concentrations for individual pollutants were calculated from data from all 21 plants in this final BAT database. For organic priority pollutants, data from only the four CMA study plants were used to analyze effluent variability and calculate variability factors which were then used to calculate the four-day average and daily maximum limitations. Data for calculating variability factors for cyanide came from one CMA plant. Since the CMA study only addressed organic priority pollutants, data for calculating variability factors for heavy metals were taken from six well-operated plants in the BPT Daily Data file. (See the BPT Development Document for details on the BPT Daily Data file.)

The Verification study employed primarily GC analysis, with GC-MS confirmation. In accordance with EPA's finding discussed in Appendix C, all GC/CD data were deleted from the CMA database because of the disparities with GC/MS results, the impossibility of determining which GC/CD data points were valid, and the failure to use the interference elimination options which had been employed in Verification Phase GC/CD methods; only GC/MS results were used. Data for pentachlorophenol and 2,4,6-trichlorophenol at CMA plant 4 were excluded from the BAT limitation calculations, since this plant did not employ an appropriate treatment technology (such as solvent extraction) to remove these pollutants; the treatment of these pollutants at this plant was therefore judged inadequate for BAT. Data for the following pollutants at CMA plant 5 were deleted because the overall average percent removals were negative: chloroform, methylene chloride, and dibenzo(a,h)anthracene.

Pollutants Addressed. The priority pollutants for which the Agency attempted to develop BAT effluent limitations are listed in Table VI-2. As explained below, EPA was unable to develop limitations for some of these pollutants because of data deficiencies.

Limitation Calculations. TABLES IX-1 and IX-2 present the influent and effluent long-term concentration values for Not Plastics-Only and Plastics-Only plants, respectively, for those pollutants analyzed for and detected at the 21 final BAT database plants. Limitations are proposed for all the pollutants listed in Tables IX-1 and IX-2, except for the following:

- Pollutants for which a pollutant class variability factor (explained below) was not available--e.g., nitrobenzene, bis(2-chloroisopropyl)ether, anthracene, and acrylonitrile.

- Pollutants for which adequate performance data for technologies known to be effective were not available--e.g., nickel, selenium, chlorobenzene, thallium, and silver.

- Zinc, which was not regulated in the Plastics-Only subcategory because the Agency obtained zinc concentration data only from rayon manufacturers.

TABLE IX-1

FINAL BAT DATABASE --
SUMMARY STATISTICS

FOR NOT PLASTICS-ONLY PLANTS

POLLUTANT CODE		NUMBER	CONCENTRATION, ug/l			
ACID EXTRACTABLES	Name	OF PLANTS	Influent Mean	Effluent Mean	Influent Median	Effluent Median
65	Phenol	5	999.556	14.051	299.000	13.500
34	2,4-Dimethylphenol	4	234.343	18.847	105.700	16.000
31	2,4-Dicholorophenol	1	560.000	34.250	560.000	34.250
21	2,4,6-Tricholorophenol	1	59.315	31.389	59.315	31.389
64	Pentachlorophenol	1	17.125	15.938	17.125	15.938
24	2-Chlorophenol	1	78.000	10.375	78.000	10.375
57	2-Nitrophenol	1	114.500	28.500	114.500	28.500
58	4-Nitrophenol	1	772.200	141.600	772.200	141.600
59	2,4-Dinitrophenol	1	126.571	41.500	126.571	41.500
BASE/NEUTRAL EXTRACTABLES						
66	Bis-(2-Ethylhexyl) Phthalate	2	3239.0	56.97	3239.0	56.97
68	Di-N-Butyl Phthalate	3	905.5	94.31	245.1	50.00
70	Diethyl Phthalate	2	1008.3	44.96	1008.3	44.96
78	Anthracene	1	206.7	12.00	206.7	12.00
55	Naphthalene	4	1562.5	22.04	335.5	17.33
71	Dimethyl Phthalate	1	193.3	63.67	193.3	63.67
84	Pyrene	2	332.4	26.75	332.4	26.75
39	Fluoranthrene	2	207.4	16.88	207.4	16.88
56	Nitrobenzene	1	68764.3	163.25	68764.3	163.25
25	1,2-Dichlorobenzene	2	1539.5	46.41	1539.5	46.41
36	2,6-Dinitrotoluene	1	3436.8	264.00	3436.8	264.00
42	Bis-(2-Chloroisopropyl) Ether	1	5583.3	2250.00	5583.3	2250.00
35	2,4-Dinitrotoluene	1	12924.0	109.20	12924.0	109.20

TABLE IX-1 (continued)

POLLUTANT CODE	Name	NUMBER OF PLANTS	CONCENTRATION, ug/l Influent Mean	Effluent Mean	Influent Median	Effluent Median
BASE/NEUTRAL EXTRACTABLES (contd)						
8	1,2,4-Trichlorobenzene	1	233.3	42.76	233.3	42.76
1*	Acenaphthene	3	45.5	10.00	18.0	10.00
81*	Phenanthrene	6	449.7	10.00	23.6	10.00
80*	Fluorene	6	48.4	10.00	14.4	10.00
69*	Di-N-Octyl Phthalate	1	23.0	10.00	23.0	10.00
77*	Acenaphthylene	4	194.7	10.00	63.1	10.00
72*	Benzo(A)Anthracene	1	10.7	10.00	10.7	10.00
73	Benzo(A)Pyrene	2	14.6	13.93	14.6	13.93
54*	Isophorone	1	55.7	10.00	55.7	10.00
PESTICIDES						
110*	PCB-1248 (Arochlor 1248)	1	10.6667	10	10.6667	10
METALS						
114	Antimony (Total)	2	290.000	225.000	290.000	225.000
115	Arsenic (Total)	1	19.140	13.000	19.140	13.000
119	Chromium (Total)	14	673.397	95.400	428.433	51.250
120	Copper (Total)	9	440.877	61.827	100.000	40.000
123	Mercury (Total)	1	48.780	25.000	48.780	25.000
124	Nickel (Total)	2	844.250	456.250	844.250	455.250
125	Selenium (Total)	1	216.667	143.333	216.667	143.333
128	Zinc (Total)	5	695.583	226.033	438.333	60.000
122	Lead (Total)	6	234.491	136.366	56.867	22.555
118	Cadmium (Total)	1	23.000	20.000	23.000	20.000

TABLE IX-1 (continued)

POLLUTANT CODE		NUMBER OF PLANTS	CONCENTRATION, ug/l			
METALS (contd)	Name		Influent Mean	Effluent Mean	Influent Median	Effluent Median
127	Thallium (Total)	2	40.000	36.500	40.000	36.500
121	Cyanide	3	500.479	110.593	357.384	95.111
126*	Silver (Total)	1	22.667	10.00	22.667	10.000
VOLATILES						
86	Toluene	6	11330.2	57.591	7779.3	46.925
23	Chloroform	3	1146.8	18.782	865.0	19.125
4	Benzene	4	5918.9	48.125	6267.0	21.875
44	Methylene Chloride	3	49.0	18.505	42.8	16.250
38	Ethylbenzene	1	970.0	55.000	970.0	55.000
87	Trichloroethylene	1	483.7	16.250	483.7	16.250
7	Chlorobenzene	2	3523.3	287.050	3523.3	287.050
29	1,1-Dichloroethylene	1	1200.0	32.750	1200.0	32.750
10	1,2-Dichloroethane	4	2263.5	280.497	1429.9	44.744
3	Acrylonitrile	1	20252.5	27.500	20252.5	27.500
14	1,1,2-Trichloroethane	2	313.8	19.625	313.8	19.625
13	1,1-Dichloroethane	1	775.0	65.500	775.0	65.500
33	1,3-Dichloropropylene	2	2699.8	39.737	2699.8	39.737
32	1,2-Dichloropropane	3	3283.1	335.565	2258.0	59.417
85*	Tetrachloroethylene	2	10.6	10.000	10.6	10.000
11*	1,1,1-Trichloroethane	4	270.7	10.000	64.8	10.000
6*	Carbon Tetrachloride	4	31.8	10.000	19.4	10.000
18*	Dichlorobromomethane	3	25.6	10.000	27.1	10.000
45*	Methyl Chloride	1	30.0	10.000	30.0	10.000
16*	Chloroethane	2	91.2	10.000	91.2	10.000

TABLE IX-1 (concluded)

POLLUTANT CODE		NUMBER OF PLANTS	CONCENTRATION, ug/l			
VOLATILES (contd)	Name		Influent Mean	Effluent Mean	Influent Median	Effluent Median
88*	Vinyl Chloride	1	10.08	10.000	10.08	10.000
51*	Chlorodibromomethane	1	10.58	10.000	10.58	10.000
46*	Methyl Bromide	1	40.94	10.000	40.94	10.000

NOTE: Effluent mean and median values were calculated using only effluent data greater than 10 ppb except for the asterisked (*) pollutants, which had all effluent values less than or equal to 10 ppb.

TABLE IX-2

FINAL BAT DATABASE -- SUMMARY STATISTICS

FOR PLASTICS-ONLY PLANTS

POLLUTANT CODE		NUMBER OF PLANTS	CONCENTRATIONS, ug/l			
ACID EXTRACTABLES	NAME		Influent Mean	Effluent Mean	Influent Median	Effluent Median
65	Phenol	1	66.5	10.5	66.5	10.5
BASE/NEUTRAL EXTRATABLES						
66	Bis-(2-Ethylhexyl) Phthalate	1	23.25	13.75	23.25	13.75
METALS						
119	Chromium (Total)	1	77.0	39.00	77.0	39.00
120	Copper (Total)	2	88.0	40.83	88.0	40.83
128	Zinc (Total)	1	325667.0	3133.33	325667.0	3133.33
122	Lead (Total)	1	25.0	13.00	25.0	13.00
118*	Cadmium (Total)	1	26.0	10.00	26.0	10.00
121*	Cyanide (Total)	1	73.0	10.00	73.0	10.00
VOLATILES						
3	Acrylonitrile	1	30630.0	122.667	30630.0	122.667
38*	Ethylbenzene	1	2926.0	10.000	2926.0	10.000
2*	Acrolein	1	907.5	10.000	907.5	10.000
88*	Vinyl Chloride	1	993.2	10.000	993.2	10.000

NOTE: Effluent mean and median values were calculated using only effluent data greater than 10 ppb except for the asterisked (*) pollutants, which had all effluent values less than or equal to 10 ppb.

Zinc concentrations in rayon manufacturing wastewaters are typically several orders of magnitude higher than in wastewaters from other Plastics-Only manufacturers. The Agency is evaluating the data to decide whether a separate subcategory for rayon manufacturers is warranted.

- Pollutants for which all effluent values were less than or equal to 10 ppb and influent means were less than 25 ppb. The Agency felt that these data might not be characteristic of the OCPSF Industry.

The Agency typically calculated daily maximum and four-day average effluent limitations for each pollutant by multiplying the long-term median concentration by daily maximum and four-day average variability factors, respectively. The variability factors reflect the product/process, treatment, and analytical variability that occur at well-designed and well-operated OCPSF treatment facilities. The four-day average limitations apply to the average of the daily values for four consecutive monitoring days, whether the values are from four consecutive days, one day weekly for four weeks, or one day monthly for four months. The required monitoring frequency will vary from plant to plant. EPA feels that four times a month is a reasonable monitoring frequency for some plants. For others, once a month may be more appropriate. The calculations are explained below; the statistical details are given in Appendix F.

(1) Calculation of Long-Term Medians. For each pollutant, the long-term median of all the daily effluent values in the final BAT database was calculated as follows: Organic priority pollutants results reported as "below detection limit" were assigned the value of 10 ppb (the detection limit). Single daily samples had often been analyzed in replicate and at more than one laboratory. Where multiple aliquots of a single sample had been analyzed at one laboratory, all the results at that laboratory were averaged, giving an intra-laboratory average. The intra-laboratory averages for all the laboratories were then averaged, giving a plant single-day mean. For each plant, all the single-day means above 10 ppb were averaged, giving a plant multi-day mean. The median of the plant multi-day means from all the plants in the database for that pollutant was determined and called the long-term median.

(2) Variability Factors. Variability factors are pollutant-specific peaking factors that relate the numerical limitations for the maximum day and the four-day average to the long-term median. The Agency derived the two variability factors for each pollutant by fitting an appropriate mathematical model to the statistical distribution of the daily data. This model was used to calculate the daily maximum and four-day average variability factors, VF1 and VF4, for each pollutant at each plant. For each pollutant, each of the two variability factors were averaged over all plants, giving an overall VF1 and VF4 for each pollutant.

For some pollutants, variability information was limited. For such pollutants, variability factors were extrapolated from the variability factors for groups of pollutants with related chemical structure and thus comparable

treatment variability. The priority pollutants have been grouped by chemical characteristics into groups of chemicals possessing similar structure and properties, as shown in TABLE IX-3. The derivation of these groupings is explained in the document referenced in Table IX-3. Each pollutant in each chemical group was assigned a VF1 and a VF4 equal to the average of the VF1s and VF4s possessed by any pollutants in the same group. Daily and four-day average limitations were then calculated for each pollutant by multiplying its long-term median value by each of the two variability factors.

Variability factors were applied differently to the Group 7 (heavy metals) pollutants than to the other groups. The plants were segregated into the two subcategories, Plastics-Only and Not Plastics-Only, and the variability factors for each metal from each plant were separately averaged within each subcategory, giving a variability factor in each of the two subcategories for each metal. For metals where no variability factor could be calculated directly, a variability factor was estimated by averaging the variability factors for each of the other metals at each plant. For example, since no variability factor for antimony was available in the Not Plastics-Only subcategory but factors for copper, chromium, lead, and zinc were, the average of the four variability factors was assigned to antimony.

The variability factors for each priority pollutant class are listed in TABLE IX-4. The statistical model used and the variability factor calculations are described in more detail below.

(a) Selection of a Statistical Model. The Agency chose a statistical probability model appropriate to the concentration data reported for organic priority pollutants. Typically, effluent wastewater analyses are modeled with the lognormal distribution, because measurements of treated wastewater concentrations usually yield many data points at the lower end of the concentration scale (which is limited by zero) and fewer data points at the higher (unlimited) end of the concentration scale. For such results, the mean of the concentration values exceeds the median concentration value, statistical skewness is positive (i.e., the distribution exhibits a long tail of values over higher concentrations), and the variation below the median is less than the variation above the median. OCPSF effluent data exhibit the characteristics cited above and typically have a portion of their data at the lower end of the concentration scale reported as not detected, trace, less than detection limit, detection limit, or less than some small specified concentration values (e.g., less than 4 ppb).

Because such reported values are not quantitative, the Agency selected the delta distribution (sometimes referred to as the delta-lognormal distribution) as practical and defensible for analyzing data that exhibit the characteristics cited above. The delta distribution incorporates both the positive probability that reported values will fall below some chosen analytical method detection limit and the positively skewed distribution of reported concentration values above the chosen detection limit. To ensure that the model was appropriate, goodness-of-fit tests were run on each plant-specific and pollutant-specific data set; the results support the model selection. Further details on the model and the goodness-of-fit tests are presented in Appendix F.

TABLE IX-3

PRIORITY POLLUTANT CLASSES

1. Halogenated Methanes (C1's)
   - • 46 Methyl bromide
   - • 45 Methyl chloride
   - • 44 Methylene chloride (dichloromethane)
   - 47 Bromoform (tribromomethane)
   - • 23 Chloroform (trichloromethane)
   - • 48 Bromodichloromethane
   - 51 Dibromochloromethane
   - • 50 Dichlorodifluoromethane
   - • 49 Trichlorofluoromethane
   - • 6 Carbon tetrachloride (tetrachloromethane)

2. Chlorinated C2's
   - • 16 Chloroethane (ethyl chloride)
   - • 88 Chloroethylene (vinyl chloride)
   - • 10 1,2-Dichloroethane (ethylene dichloride)
   - • 13 1,1-Dichloroethane
   - • 30 1,2-trans-Dichloroethylene
   - • 29 1,1-Dichloroethylene (vinylidene chloride)
   - • 14 1,1,2-Trichloroethane
   - • 11 1,1,1-Trichloroethane (methyl chloroform)
   - • 87 Trichloroethylene
   - • 85 Tetrachloroethylene
   - • 15 1,1,2,2-Tetrachloroethane
   - • 12 Hexachloroethane

3. Chlorinated C3's
   - • 32 1,2-Dichloropropane
   - • 33 1,3-Dichloropropylene

4. Chlorinated C4
   - • 52 Hexachlorobutadiene

5. Chlorinated C5
   - • 53 Hexachlorocylopentadiene

NOTES: (1) Numbers refer to a published alphabetical listing of the priority pollutants.

(2) • Priority pollutants found in verification.

REFERENCE: Wise, H.E., and P. O. Fahrenthold (1981). Occurrence and Predictability of Priority Pollutants in Wastewaters of the Organic Chemicals and Plastics/Synthetic Fibers Industrial Categories, USEPA, 1981.

TABLE IX-3 (continued)

6. Chloroalkyl Ethers
   - 17 bis(chloromethyl)ether
   - • 18 bis(2-chloroethyl)ether
   - • 42 bis(2-chloroisopropyl)ether
   - 19 2-chloroethylvinyl ether
   - • 43 bis(2-chloroethoxy) methane

7. Metals
   - •114 Antimony
   - •115 Arsenic
   - •117 Beryllium
   - •118 Cadmium
   - •119 Chromium
   - •120 Copper
   - •122 Lead
   - •123 Mercury
   - •124 Nickel
   - •125 Selenium
   - •126 Silver
   - 127 Thallium
   - •128 Zinc

8. Pesticides
   - 89 Aldrin
   - 90 Dieldrin
   - 91 Chlordane
   - 95 alpha-Endosulfan
   - 98 Endrin
   - 99 Endrin aldehyde
   - 100 Heptachlor
   - 101 Heptachlor epoxide
   - 102 alpha-BHC
   - 103 beta-BHC
   - 104 gamma-BHC (Lindane)
   - 105 delta-BHC
   - 92 4,4'-DDT
   - 93 4,4'-DDE (p,p'-DDx)
   - 94 4,4'-DDD (p,p'-TDE)
   - 113 Toxaphene

9. Nitrosamines
   - 61 N-Nitrosodimethyl amine
   - • 62 N-Nitrosodiphenyl amine
   - 63 N-Nitrosodi-n-propyl amine

10. Miscellaneous
   - • 2 Acrolein
   - • 3 Acrylonitrile
   - • 54 Isophorone
   - •121 Cyanide

TABLE IX-3 (continued)

11. Aromatics
    - 4 Benzene
    - 86 Toluene
    - 38 Ethylbenzene

12. Polyaromatics
    - 55 Naphthalene
    - 1 Acenaphthene
    - 77 Acenaphthylene
    - 78 Anthracene
    - 72 Benzo(a)anthracene (1,2-benzanthracene)
    - 73 Benzo(a)pyrene (e,4-benzopyrene)
    - 74 3,4-Benzofluoranthene
    - 75 Benzo(k)fluoranthene (11,12-benzofluoranthene)
    - 79 Benzo(ghi)perylene (1,12-benzoperylene)
    - 76 Chrysene
    - 82 Dibenzo(a,h)anthracene (1,2,5,6-dibenzanthracene)
    - 80 Fluorene
    - 39 Fluoranthene
    - 83 Indeno(1,2,3-cd)pyrene (2,3-o-Phenylene pyrene)
    - 81 Phenanthrene
    - 84 Pyrene

13. Chloroaromatics
    - • 7 Chlorobenzene
    - • 25 o-Dichlorobenzene
    - • 27 p-Dichlorobenzene
    - • 26 m-Dichlorobenzene
    - • 8 1,2,4-Trichlorobenzene
    - • 9 Hexachlorobenzene

14. Chlorinated Polyaromatic
    - 20 2-Chloronaphthalene

15. Polychlorinated Biphenyls
    - 106-112 Seven listed

16. Phthalate Esters
    - • 66 bis(2-Ethylhexyl)
    - • 67 Butylbenzyl
    - • 68 Di-n-butyl
    - • 69 Di-n-octyl
    - • 70 Diethyl
    - • 71 Dimethyl

17. Nitroaromatics
    - • 56 Nitrobenzene
    - • 35 2,4-Dinitrotoluene
    - • 36 2,6-Dinitrotoluene

TABLE IX-3 (concluded)

18. Benzidines
    - 5 Benzidine
    - 28 3,3'-Dichlorobenzidine
    - 37 1,2-Diphenylhydrazine

19. Phenols
    - • 65 Phenol
    - • 34 2,4-Dimethylphenol

20. Nitrophenols
    - • 57 2-Nitrophenol
    - • 58 4-Nitrophenol
    - • 59 2,4-Dinitrophenol
    - • 60 4,6-Dinitro-o-cresol

21. Chlorophenols
    - • 24 2-Chlorophenol
    - 22 4-Chloro-m-cresol
    - • 31 2,4-Dichlorophenol
    - • 21 2,4,6-Trichlorophenol
    - • 64 Pentachlorophenol

22. 144 TCDD (2,3,7,8-Tetrachloro-dibenzo-p-dioxin)

23. Haloaryl Ethers
    - 40 4-Chlorophenylphenyl ether
    - 41 4-Bromophenylphenyl ether

TABLE IX-4

VARIABILITY FACTORS BY PRIORITY POLLUTANT CLASS

POLLUTANT CLASS*	FRACTION	POLLUTANT	PLANT	NUMBER DAYS	NUMBER DETECTS	MA	P99	P95	VF(1)**	VF(4)**
1	V	Chloroform (23)	P1	24	14	25	81	48	3.18	1.90
	V	Methylene Chloride (44)	P1	24	13	16	42	27	2.62	1.69
									2.90	1.80
2	V	1,2-dichloroethane (10)	P1	24	7	309	1224	578	3.96	1.87
			P3	33	7	21	52	38	2.50	1.85
									3.23	1.86
11	V	Toluene (86)	P3	32	10	59	282	154	4.74	2.60
13	B	1,2,4-trichlorobenzene (8)	P4	11	11	46	198	83	4.32	1.80
		1,2-dichlorobenzene (25)	P4	11	6	36	206	102	5.76	2.87
									5.04	2.34
16	B	Bis(2-ethylhexyl)phthalate (66)	P3	33	26	67	537	207	8.02	3.08
	B	Di-n-butyl phthalate (68)	P3	33	10	21	59	42	2.80	1.99
	B	Diethyl Phthalate (70)	P3	33	24	28	190	79	6.67	2.76
									5.83	2.61
19	A	Phenol (65)	P3	33	3	12	15	14	1.20	1.11
			P5	7	4	19	24	21	1.28	1.14
									1.24	1.13
20	A	2,4-dinitrophenol (59)	P3	33	7	57	200	127	3.49	2.23

*Priority pollutant classes are defined in Table IX-1.

**The arithmetic average is given for pollutant classes with more than one value.

TABLE IX-4 (concluded)

POLLUTANT CLASS*	FRACTION	POLLUTANT		PLANT	NUMBER DAYS	NUMBER DETECTS	MA	P99	P95	VF(1)**	VF(4)**
21	A	2,4,6-trichlorophenol (21)		P3	33	18	42	255	125	6.08	2.99
		2,4-dichlorophenol (31)		P4	11	5	52	325	148	6.29	2.87
		Pentachlorophenol (64)		P3	7	4	18	71	38	3.94	2.13
										5.44	2.66
7	M	Chromium (119)	Plastics	3	46	46	19	65	30	3.50	1.64
				110	26	26	57	110	72	1.94	1.28
										2.72	1.46
			Not Plastics	113	8	8	77	325	138	4.24	1.80
				126	90	90	21	59	31	2.86	1.50
										3.55	1.65
		Copper (120)	Not Plastics	113	145	145	32	88	47	2.76	1.47
				118	27	27	152	692	284	4.55	1.87
										3.66	1.67
		Lead (122)	Not Plastics	113	13	13	11	31	16	2.87	1.50
		Zinc (128)	Plastics	27	158	158	2896	7902	4242	2.73	1.46
			Not Plastics	110	8	8	137	531	236	3.87	1.72
				113	150	150	124	365	188	2.94	1.51
										3.41	1.62
		TOTAL METALS	Plastics							2.73	1.45
			Not Plastics							3.37	1.61
10	-	Cyanide (121)		P5	29	27	97	410	180	4.23	1.86

(b) Calculation of Daily Maximum Variability Factors (VF1) and Four-Day Average Variability Factors (VF4). For each pollutant, VF1 and VF4 for each plant were calculated for those of the four CMA plants that have at least three single-day averages (see Calculation of Long-Term Medians) above 10 ppb. To develop VF1 (the daily maximum variability factor), at each plant the Agency applied the delta distribution to the plant single-day means to calculate two terms -- the estimated 99th percentile value and the estimated arithmetic mean value. VF1 for that plant was then calculated as the 99th percentile value divided by the estimated arithmetic mean value. The VF1s from all the plants were then averaged, giving an overall VF1 for each pollutant.

To develop VF4 (the four-day average variability factor), at each plant the Agency assumed that the distribution of the four-day averages of the four samples followed a modified delta distribution. The 95th percentile value and the estimated arithmetic mean value were then calculated from this distribution. The four-day model's estimated arithmetic mean value was identical to the individual-day model's estimated arithmetic mean value. VF4 for that plant was then calculated as the estimated 95th percentile value divided by the estimated arithmetic mean value. The VF4s from all the plants were then averaged, giving an overall VF4 for each pollutant.

The details of the statistical development of the variability factors are described in Appendix F. Results of the effluent variability analysis are summarized in Table IX-4, which includes the following information: number of days of data used, number of plant single-day means above 10 ppb, estimated long-term mean (MA) for days above 10 ppb, estimated 99th percentile value for the plant single-day means (P99), estimated 95th percentile value for plant four-day means (P95), daily maximum variability factor (VF1), and four-day average variability factor (VF4). The table also notes the analytical fraction and priority pollutant class of each pollutant and the overall VF1 and VF4 for each pollutant class. Variability factors could not be calculated separately for the Plastics-Only subcategory because there were no Plastics-Only plants in the CMA study.

(3) Proposed Limitations. TABLES IX-5 AND IX-6 give daily and four-day effluent limitations for the Plastics-Only and Not Plastics-Only plants, respectively. The pollutants in Tables IX-5 and IX-6 are listed by pollutant number and analytical fraction, where V=volatile fraction, A=acid extractable fraction, and B=the base/neutral extractable fraction. The four-day average limitations apply to the arithmetic average of any four consecutive daily monitoring samples, whether the daily samples are taken every day, weekly, or monthly.

All organic priority pollutant limitations that had been calculated as less than 50 µg/ℓ were rounded up to 50 µg/ℓ. Limitations on organic pollutants were rounded up to the next number divisible by 25; limitations on heavy metals were rounded up to the next number divisible by 10. For example, the daily maximum limitation in the Plastics-Only subcategory for phenol is 50 (1.24 x 10.5 = 13.0, which was rounded up to 50); the daily maximum limitation for chromium is 110 (2.72 x 39.0 = 106.1, which was rounded up to 110). Pollutants for which the influent mean values in the CMA or Verification

TABLE IX-5

BAT EFFLUENT LIMITATIONS (ug/l)
PLASTICS-ONLY

POLLUTANT	FRACTION	POLLUTANT CLASS	LONG-TERM MEDIAN*	NUMBER OF PLANTS	FOUR-DAY LIMITATION**	DAILY LIMITATION
(65) Phenol	A	19	10.5	1	--	50
(66) Bis(2-ethylhexyl)phthalate	B	16	13.8	1	50	100
(118) Cadmium	M	7	10.0	1	20	30
(119) Chromium	M	7	39.0	1	60	110
(120) Copper	M	7	40.8	2	60	120
(121) Cyanide		10	10.0	1	20	50
(122) Lead	M	7	13.0	1	20	40
(2) Acrolein	V	10	10.0	1	--	50
(38) Ethylbenzene	V	11	10.0	1	--	50
(88) Vinyl chloride	V	2	10.0	1	--	50

* A long-term median of 10 ug/l for organic toxic pollutants indicates that all effluent values were less than the detection limit and influent was greater than 25 ug/liter; the daily limitation was set at 50 ug/liter in such cases.

** No four-day average limitation was given if the daily limitation was 50 ug/liter.

TABLE IX-6

BAT EFFLUENT LIMITATIONS (ug/l)
NOT PLASTICS-ONLY PLANTS

	POLLUTANT	FRACTION	POLLUTANT CLASS	LONG-TERM MEDIAN*	NUMBER OF PLANTS	FOUR-DAY MAXIMUM**	DAILY MAXIMUM
(21)	2,4,6-trichlorophenol	A	21	31.4	1	100	175
(24)	2-chlorophenol	A	21	10.4	1	50	75
(31)	2,4-dichlorophenol	A	21	34.3	1	100	200
(34)	2,4-dimethylphenol	A	19	16.0	4	--	50
(57)	2-nitrophenol	A	20	28.5	1	75	100
(58)	4-nitrophenol	A	20	141.6	1	325	500
(59)	2,4-dinitrophenol	A	20	41.5	1	100	150
(64)	Pentachlorophenol	A	21	15.9	1	50	100
(65)	Phenol	A	19	13.5	5	--	50
(1)	Acenaphthene	B	12	10.0	3	--	50
(8)	1,2,4-trichlorobenzene	B	13	42.8	1	125	225
(25)	1,2-dichlorobenzene	B	13	46.4	2	125	250
(54)	Isophorone	B	10	10.0	1	--	50
(66)	Bis(2-ethylhexyl)phthalate	B	16	57.0	2	150	350
(68)	Di-n-butyl phthalate	B	16	50.0	3	150	300

TABLE IX-6 (continued)

POLLUTANT	FRACTION	POLLUTANT CLASS	LONG-TERM MEDIAN*	NUMBER OF PLANTS	FOUR-DAY MAXIMUM**	DAILY MAXIMUM
(70) Diethyl Phthalate	B	16	45.0	2	125	275
(71) Dimethyl phthalate	B	16	63.7	1	175	375
(77) Acenaphthylene	B	12	10.0	4	--	50
(80) Fluorene	B	12	10.0	6	--	50
(81) Phenanthrene	B	12	10.0	6	--	50
(114) Antimony	M	7	225.0	2	370	780
(118) Cadmium	M	7	20.0	1	40	70
(119) Chromium	M	7	51.3	14	90	190
(120) Copper	M	7	40.0	9	70	150
(121) Cyanide		10	95.1	3	180	410
(122) Lead	M	7	22.6	6	40	70
(123) Mercury	M	7	25.0	1	50	90
(128) Zinc	M	7	60.0	5	100	210
(4) Benzene	V	11	21.9	4	75	125
(6) Carbon tetrachloride	V	1	10.0	4	--	50
(10) 1,2-dichloroethane	V	2	44.7	4	100	150

TABLE IX-6 (concluded)

	POLLUTANT	FRACTION	POLLUTANT CLASS	LONG-TERM MEDIAN*	NUMBER OF PLANTS	FOUR-DAY MAXIMUM**	DAILY MAXIMUM
(11)	1,1,1-trichloroethane	V	2	10.0	4	--	50
(13)	1,1-dichloroethane	V	2	65.5	1	125	225
(14)	1,1,2-trichloroethane	V	2	19.6	2	50	75
(16)	Chloroethane	V	2	10.0	2	--	50
(23)	Chloroform	V	1	19.1	3	50	75
(29)	1,1-dichloroethylene	V	2	32.8	1	75	125
(38)	Ethylbenzene	V	11	55.0	1	150	275
(44)	Methylene chloride	V	1	16.3	3	--	50
(45)	Methyl chloride	V	1	10.0	1	--	50
(46)	Methyl bromide	V	1	10.0	1	--	50
(48)	Dichlorobromomethane	V	1	10.0	3	--	50
(86)	Toluene	V	11	46.9	6	125	225
(87)	Trichloroethylene	V	2	16.3	1	50	75

* A long-term median of 10 ug/liter for organics indicates that all effluent values were less than the detection limit and influent was greater than 25 ug/liter; the daily limitation was set at 50 ug/liter in such cases.

** No four-day average limitation was given if the daily limitation was 50 ug/liter.

databases were above 25 µg/ℓ and all effluent values were less than 10 µg/ℓ were assigned a daily limitation of 50 µg/ℓ (e.g., acenaphthene in Table IX-4). Pollutants that were assigned daily limitations of 50 µg/ℓ were not assigned four-day average limitations.

EPA believes that setting effluent limitations at 10 µg/ℓ, even where warranted by appropriate statistical techniques applied to the data, will frequently produce apparent violations that actually only result from analytical variability at this low concentration. In such cases, the discharger and the pretreatment control or permitting authority would have to review the analytical procedures used to determine whether a violation had actually occurred. The associated disputes over incidental analytical methods issues would divert attention from the central issue of whether the appropriate set of BAT controls and treatments have been installed and are being properly operated. EPA believes that sound regulatory policy requires limitations high enough to reduce the probability of serious analytical disputes without being so high that inadequate treatment is allowed.

To avoid analytical methods disputes, a concentration of 50 µg/ℓ has been set as the daily maximum limitation for organic priority pollutants whenever the statistical methodology yields concentrations below 50 µg/ℓ. Although the four-day average limitations should be lower than the daily maximum limitations, the daily maximum limitations of 50 µg/ℓ will suffice for regulation and enforcement. The 50 µg/ℓ limitation may be higher than necessary to avoid non-trivial analytical methods disputes, since lower concentrations are both technically achievable and measurable.

Limitations were not developed for pollutants in classes where no variability factor could be estimated from the CMA data or for pollutants where no long-term median could be estimated from the CMA and Verification data. The Agency has been unable to develop limitations for 60 of the other pollutants listed in Table VI-2 because of inadequate data. EPA intends to assess the need for effluent limitations for these pollutants during the additional data gathering and field sampling studies that the Agency plans to perform before promulgation.

Treatment Technologies Reflected in the Limitations

TABLE IX-7 tabulates the technologies used for in-plant and end-of-pipe treatment at the 21 final BAT database plants from which the proposed BAT limitations were derived.

IMPACTS OF BAT IMPLEMENTATION

General

This section summarizes EPA's evaluation of the impacts of implementation of the proposed BAT limitations for the OCPSF Industry. The subsections address the number of OCPSF plants in and out of compliance with the proposed limitations, the reduction in priority pollutants discharged, the capital and annual costs of compliance, and non-water quality environmental impacts.

TABLE IX-7

TREATMENT SYSTEMS AT PLANTS
USED TO CALCULATE BAT LIMITATIONS

TECHNOLOGY	VERIFICATION PLANTS		CMA PLANTS		TOTAL PLANTS	
	I-P	E-O-P	I-P	E-O-P	I-P	E-O-P
Steam Stripping	6	1	1	0	7	1
Solvent Recovery	2	0	0	0	2	0
Chemically-Assisted Clarification	0	8	0	1	0	9
Equalization	0	15	0	2	0	17
Neutralization	0	14	0	1	0	15
Aerated Lagoons -First Stage	0	4	0	0	0	4
Aerated Lagoons - Second Stage	0	1	0	0	0	1
Polishing Pond	0	3	0	1	0	4
Toluene Recovery Decant Tank	1	0	0	0	1	0
Clarification	0	6	0	2	0	8
Activated Sludge	0	8	0	3	0	11
Xylene Recovery Column	0	0	1	0	1	0
Methanol Recovery Column	0	0	1	0	1	0
Anaerobic Lagoon - First Stage	0	1	0	0	0	1
Anaerobic Lagoon - Second Stage	0	1	0	0	0	1
API Oil Separator	0	4	0	1	0	5
Trickling Filter	0	2	0	1	0	3
Pure Oxygen Activated Sludge	0	3	0	0	0	3
Flocculation	0	1	0	0	0	1
Carbon Adsorption	0	2	0	0	0	2
Multi-media Filtration	0	1	0	0	0	1
Solvent Extraction	0	0	0	1	0	1
Post Aeration	0	0	1	0	1	0
Alcohol Recovery Stripper	2	0	0	0	2	0
Triethanol Amine (TEA) Recovery	1	0	0	0	1	0
Benzene Stripper	1	0	0	0	1	0
Low Temperature Hydrolysis	0	0	1	0	1	0
Olefin Condensate Stripper	1	0	0	0	1	0
Recovery Column	1	0	0	0	1	0
Air Stripping	0	1	0	0	0	1

TABLE IX-7 (concluded)

TECHNOLOGY	VERIFICATION PLANTS		CMA PLANTS		TOTAL PLANTS	
	I-P	E-O-P	I-P	E-O-P	I-P	E-O-P
Dissolved Air Flotation	0	2	0	1	0	3
Powdered Activated Carbon	0	1	0	0	0	1
Oil Separation	0	4	0	0	0	4
Solvent Recovery Stripper	3	0	0	0	3	0
Settling	0	1	0	0	0	1
Aerobic Lagoon - First Stage	0	2	0	0	0	2
- Second and Third Stage	0	1	0	0	0	1
Alcohol Recovery	0	0	1	0	1	0
Solvent Recovery Flash Column	0	0	1	0	1	0
TOTALS	18	88	7	14	25	102
Total Number of Plants	17		4		21	

NOTE: I-P = in-plant
E-O-P = end-of-pipe

Present Compliance

The Agency evaluated present compliance for two groups of plants: 33 plants in the BAT database and 566 direct discharge plants evaluated in the Economic Impact Analysis. The evaluation and results are discussed below.

Data from the Verification and CMA Sampling programs for 33 of the BAT database plants were tabulated. At each plant, all the daily values (three for each Verification plant, six to twenty-five for each CMA plant) were averaged. For each plant, this multi-day average and the maximum daily value for each pollutant were compared to the proposed four-day average and maximum day effluent limitations, respectively. Any plant that exceeded at least one of the proposed limitations for any pollutant was judged to be out of compliance; thirteen of the thirty-three were. Each of the plants lacked data for many of the pollutants for which limitations are being proposed, since only selected pollutants were analyzed during the Verification and CMA Studies.

Of the 566 direct dischargers addressed in the BAT cost analysis, 453 were found to incur compliance costs. Details of this cost analysis are presented in the next section.

Benefits and Costs of BAT Implementation

This section presents the Agency's estimates for the industry-wide direct benefits and costs of implementing these proposed BAT regulations: the reduction in discharge of priority pollutants and the capital and annual costs incurred.

Wasteload Reduction Benefits. The methodology for estimating reduction of the priority pollutant wasteload for direct dischargers is described in Section V. The proposed BAT regulation is expected to remove about 648 million pounds of priority pollutants annually from BPT effluents.

Capital and Annual Costs Incurred. As described in Section VIII, the Agency estimated BAT compliance costs for the whole OCPSF industrial category by summing the estimated costs incurred for the 566 direct dischargers covered by the BAT 308 Questionnaire. The estimated capital cost for compliance with the proposed BAT regulation is 520 million dollars. Capital costs were amortized using a capital recovery factor of 0.22. The estimated annual cost (including amortization of the capital cost) is 243 million dollars a year. Costs are in 1982 dollars.

In addition, BAT monitoring costs for these 566 plants were estimated to be 5.4 million dollars a year, assuming one $800 sample a month at each plant. The projected impacts of these costs on the industry are described in EPA's Economic Impact Analysis referenced in Section VIII.

Non-Water Quality Environmental Impacts

This section summarizes the Agency's evaluation of the changes in energy consumption, air pollutant emissions, solid and hazardous waste generation, and noise generation which may result from OCPSF industry compliance with the

proposed BAT limitations. The background material for these evaluations is presented in Section VIII.

Energy Consumption. Implementation of the proposed BAT regulation will result in the installation of certain energy-consuming-technologies, such as activated carbon regeneration, increasing OCPSF energy consumption. However, the Agency anticipates that the BAT will not significantly increase total energy consumption by the industry. The Agency plans to generate and evaluate revised energy consumption estimates before promulgating the final BAT regulation.

Air Pollutant Emissions. The Agency anticipates that many plants will comply with the BAT limitations by installing in-process controls that effectively remove volatile organic compounds before they reach the end-of-pipe treatment systems installed to meet BPT regulations. This removal will reduce air pollutant emissions presently resulting from evaporation and gas stripping from the end-of-pipe systems. The Agency concludes that compliance with the proposed BAT regulations by OCPSF plants may reduce emissions of air pollutants.

Solid Waste Generation. The Agency's preliminary analysis of the solid waste generation projections from the early GPC runs (see Section VIII) indicates that the proposed BAT regulation will not significantly increase the total amount of solid waste produced by the OCPSF industries. The Agency plans to generate and evaluate revised solid waste generation estimates before promulgating the final BAT regulation.

EPA has also considered the effect these proposed regulations would have on the generation of hazardous waste. EPA's Office of Solid Waste has analyzed the hazardous waste management and disposal costs imposed by the RCRA requirements and has published some results in 45 FR 33066 (May 19, 1980). Additional cost estimates for land disposal of hazardous wastes were published in 47 FR 32274 (July 26, 1982). Thirty solid waste streams currently generated at OCPSF plants have been listed as hazardous under Section 3001 of RCRA (See 40 (FR Part 261.32)). Other waste streams not listed may be hazardous by virtue of possessing characteristics of ignitability, corrosivity, reactivity or toxicity (see 40 CFR 261.21-.24, 45 FR 33066, May 19, 1980). It is currently estimated that total solid waste, including hazardous wastes, generated as a result of the proposed regulations will increase insignificantly compared to current loadings. The annual increase in RCRA costs due to these proposed regulations is estimated to be $9 million, or approximately one percent of the total current estimated annual cost for the industry.

Noise Generation. The mechanical equipment required by the BAT technologies is not substantially noisier than the equipment currently in use in the OCPSF production plants. Implementation of BAT, therefore, is not expected to significantly increase noise production by the OCPSF industries.

Occupational Safety and Health Administration (OSHA) standards indirectly affect the level of noise to which the public might be exposed. New

wastewater treatment equipment must comply with prescribed OSHA workplace standards. Reduction of workplace noise levels also reduces community noise levels.

Conclusion. After evaluating the anticipated non-water quality environmental impacts of the proposed BAT regulations, the Agency concludes that the proposed regulation adequately serves the nation's environmental goals.

REFERENCES

Memo from Russ Roegner, Statistician, Program Integration and Evaluation Staff and Maria Irizarry, Project Officer, Effluent Guidelines Division, to Devereaux Barnes, Acting Deputy Director, EGD, "Examination of Product/Process - Specific Approach for Determining Mass-Based Limitations for the Organic Chemicals Industry," August 2, 1982.

Memo from Russ Roegner to Devereaux Barnes, "Product/Process Flow to Production Ratios for Verification Plants with Two or Three of the 176 Product/Processes," August 10, 1982.

U.S. Environmental Protection Agency (USEPA). 1983. Economic Analysis of Proposed Effluent Standards and Limitations for the Organic Chemicals and Plastics, Synthetics, and Fibers Industries. EPA 440/2-83-004

SECTION X

EFFLUENT QUALITY ATTAINABLE THROUGH THE APPLICATION OF NEW SOURCE PERFORMANCE STANDARDS

INTRODUCTION

Under the Consent Decree and Section 306 of the Clean Water Act, EPA must develop, and new direct discharge sources in the OCPSF industries must subsequently comply with, "national standards of performance" or New Source Performance Standards (NSPS) for the control of discharge of pollutants. These standards "...reflect[s] the greatest degree of effluent reduction...achievable through application of the best available demonstrated control technology, processes, operating methods, or other alternatives, including, where practicable, standard[s] permitting no discharge of pollutants." (Section 306(a)(1)).

A "new source" is defined as "...any source, the construction of which is commenced after the publication of proposed regulations prescribing a standard of performance...which will be applicable to such source, if such standard is thereafter promulgated..." (Section 306(a)(2). Any direct discharge source which does not meet this new source definition is an existing source and must instead comply with BPT, BCT, and BAT standards.

According to Section 306(b) of the Act, in setting the standard, EPA must consider all of the following factors:

- The cost of achieving effluent reductions.
- Non-water quality environmental impacts and energy requirements.
- Classes, types, and sizes of new source plants.
- The type of production process employed (e.g., batch or continuous).

Because new plants can be designed with pollution control as a goal, innovations in plant design, product/process technology, and wastewater treatment technology can cost-effectively minimize wastewater production and discharge. This section discusses the Agency's selection of NSPS effluent limitations for the Organic Chemicals and Plastics/Synthetic Fibers Industries.

LIMITATION TYPE

This discussion is the same as the discussion presented in Section IX.

NSPS LIMITATION SELECTION

The technologies used to control conventional and priority pollutants at existing plants are fully applicable to new plants. EPA has not identified any technologies or combination of technologies for new sources that differ from those used to establish BPT and BAT limitations for existing sources. EPA is proposing NSPS limitations that are identical to those proposed for BPT and BAT, which are contained in the BPT Development Document and Section IX of this BAT Development Document, respectively. The Agency did not estimate the future cost to the OCPSF industries of these NSPS limitations, since they will not generate incremental costs or economic impacts.

SECTION XI

EFFLUENT QUALITY ATTAINABLE THROUGH THE APPLICATION OF PRETREATMENT STANDARDS FOR EXISTING SOURCES AND PRETREATMENT STANDARDS FOR NEW SOURCES

INTRODUCTION

Under the Consent Decree and Section 307 of the Clean Water Act, EPA must develop, and indirect dischargers in the Organic Chemicals and Plastics/Synthetic Fibers Industries (OCPSF) must comply with, pretreatment standards for existing sources (PSES) and for new sources (PSNS), respectively. The definitions of new source and existing source are given in the Introduction to Section X. The pollutants covered by PSES and PSNS are those pollutants which "...may interfere with, pass through, or otherwise be incompatible with..." the POTWs (publicly-owned treatment works, commonly known as municipal sewage treatment plants) to which the pollutants are discharged (Sections 307(b) and (c)). In addition, many of the pollutants in OCPSF wastewaters, at sufficiently high concentrations, can inhibit biodegradation in POTW operations. In some cases, as documented in the regulatory impact analysis which was performed in support of the general pretreatment regulations, OCPSF discharges to POTWs have caused upsets at POTWs resulting not only in pass-through of OCPSF discharges, but also in the partial or complete inability of the POTW to treat other wastewaters. Pollutants which "pass through" POTWs are also termed "not susceptible to treatment by" POTWs. "Incompatible" pollutants include pollutants that contaminate POTW sludges and thereby restrict POTW sludge reclamation and disposal options, including the beneficial use of sludges on agricultural lands.

The legislative history of the 1977 Act indicates that pretreatment standards are to be technology-based and analogous to the best available technology (BAT) standards for direct dischargers. PSNS may be more stringent than PSES, since new indirect dischargers, like new direct dischargers, have the opportunity to construct a production facility incorporating the best available technologies for pollution control, including production process design improvements, in-plant controls, end-of-pipe treatment, and optimal plant site selection. The categorical pretreatment standards developed for the OCPSF industry category in this section will be applied to OCPSF indirect dischargers through the federal, state, local, and municipal pretreatment programs being established under the general pretreatment regulations (40 CFR, Part 403).

This section lists the pollutants selected for regulation under PSES and PSNS; describes the development of PSES and PSNS effluent limitations; presents the numerical limitations, their costs and water quality benefits; and addresses non-water quality environmental benefits.

POLLUTANTS SELECTED FOR REGULATION UNDER PSES AND PSNS

The toxic pollutants selected as candidates for regulation are listed in Table VI-5 of Section VI. Table XI-1 gives the pretreatment standard effluent limitations for existing and new sources. The toxic pollutants proposed for regulation under PSES and PSNS in the Plastics-Only subcategory are acrolein, cyanide, lead, and vinyl chloride. The toxic pollutants proposed for similar regulation in the Not Plastics-Only subcategory are 2,4-dimethylphenol, 2,4-dichlorophenol, 2,4,6-trichlorophenol, 2-chlorophenol, 2-nitrophenol, 4-nitrophenol, 2,4-dinitrophenol, dimethyl phthalate, phenanthrene, fluorene, acenaphthylene, isophorone, chloroethane, 1,2-dichloroethane, methyl bromide, chromium, and mercury. All of the above toxic pollutants have been determined to pass through POTW treatment systems.

DEVELOPMENT OF PSES AND PSNS EFFLUENT LIMITATIONS

General

The Agency's performance data for in-plant controls (such as steam stripping, solvent extraction and chemical (precipitation) that remove specific toxic pollutants prior to end-of-pipe treatment is not sufficient for development of pretreatment standards. Therefore, performance data from the same CMA and Verification plants from which BAT and NSPS effluent limitations were developed were utilized in establishing PSES and PSNS (see Sections IX and X). As explained in Section V, the effluent data in the Verification and CMA databases reflect either the complete (in-plant and end-of-pipe) treatment systems at some production plants but just the end-of-pipe (predominantly biological) treatment systems at other production plants. Since the Agency cannot segregate the data on the actual performance of the in-plant controls preceding the BPT (mostly biological) end-of-pipe systems, the Agency has developed these proposed PSES and PSNS effluent limitations from performance data for the complete treatment systems.

Methodology

The BAT and NSPS effluent limitations were adopted for PSES and PSNS. The limitations reflect the performance of plants in the Verification and CMA databases whose average BOD removal is at least 95% or whose average effluent BOD concentration is less than or equal to 50 mg/l. End-of-pipe treatment technologies at plants which meet this BOD performance criteria include activated sludge, aerated lagoons, chemical precipitation and carbon adsorption; in-plant controls used to control specific toxic pollutants from segregated product/process waste stream include steam stripping, solvent extraction and chemical precipitation.

As outlined in Section VI, a pass-through analysis was performed to select pollutant parameters to be regulated under PSES and PSNS. A list of the selected pollutants is presented in Table VI-5. As discussed in the previous subsection, due to the absence of performance data for certain in-plant controls, the BAT and NSPS effluent limitations were adopted for PSES and PSNS. However, BAT and NSPS effluent limitations have not been proposed for all pollutants which require regulation under PSES and PSNS based on the

results of the pass-through analysis because insufficient data were available to calculate variability factors to apply to pollutant long-term medians for BAT and NSPS.

Proposed PSES and PSNS Effluent Limitations

The proposed PSES and PSNS effluent limitations are presented in TABLE XI-1. TABLE XI-2 presents a list of the pollutants for which PSES and PSNS effluent limitations cannot be proposed at this time due to the absence of proposed BAT and NSPS effluent limitations.

EFFECTS OF PSES AND PSNS IMPLEMENTATION

Cost of Application and Effluent Reduction Benefits

The cost (1982 dollars) of implementation of PSES based on the installation of a complete treatment system, which includes end-of-pipe controls, is estimated to be 880 million dollars in capital costs with annual costs (including amortization of the capital costs) of 404 million dollars per year. The total mass of toxic pollutants removed from discharges to POTWs is estimated to be 165 million lbs/yr.

Non-Water Quality Environmental Impacts

The non-water quality environmental impacts of PSES and PSNS will be similar to those impacts from compliance with BAT and NSPS effluent limitations. For more detailed information, refer to Sections IX and X.

TABLE XI-1

PRETREATMENT STANDARD EFFLUENT LIMITATIONS FOR EXISTING AND NEW SOURCES

POLLUTANT NAME	DAILY MAXIMUM (ppb)	FOUR-DAY AVERAGE (ppb)
Plastics-Only Subcategory		
Acrolein	50	--
Cyanide	50	20
Lead	40	20
Vinyl Chloride	50	--
Not Plastics-Only Subcategory		
2,4-Dimethylphenol	50	--
2,4-Dichlorophenol	200	100
2,4,6-Trichlorophenol	175	100
2-Chlorophenol	75	50
2-Nitrophenol	100	75
2,4-Dinitrophenol	150	100
4-Nitrophenol	500	325
Dimethyl Phthalate	375	175
Phenanthrene	50	--
Fluorene	50	--
Acenaphthylene	50	--
Isophorone	50	--
Methyl Bromide	50	--
Chloroethane	50	--
1,2-Dichloroethane	150	100
Total Chromium	190	90
Total Mercury	90	50

TABLE XI-2

POLLUTANTS FOR WHICH PSES AND PSNS EFFLUENT LIMITATIONS COULD NOT BE ESTABLISHED

Plastics-Only Subcategory

Acrylonitrile
Zinc

Not Plastics-Only Subcategory

Benzo(a)Anthracene
Nitrobenzene
Benzo(a)Pyrene
2,6-Dinitrotoluene
Bis(2-Chloroisopropyl) Ether
2,4-Dinitrotoluene
Beryllium
Selenium
Thallium
Acrylonitrile
Chlorodibromomethane
Fluoranthene

SECTION XII

ACKNOWLEDGEMENTS

The Environmental Protection Agency wishes to thank the following contractors whose work formed the basis of this document:

JRB Associates	Contract 68-01-6701
Environ	Contract 68-01-6701
Clement Associates	Contract 68-01-6024
Walk, Haydel & Associates	Contract 68-01-6024
Catalytic, Inc.	Contract 68-01-5011
Burke-Hennessy Associates	Contract 68-01-6426
Interface	Contract 3W-5038-NASX

The EPA would also like to thank the members of the Organic Chemicals and Plastics\Synthetic Fibers Industries and their plants who provided data relative to this study.

SECTION XIII

GLOSSARY

ABSORPTION. A process in which one material (the absorbent) takes up and retains another (the absorbate) with the formation of a homogeneous mixture having the attributes of a solution. Chemical reaction may accompany or follow absorption.

ACCLIMATION. The ability of an organism to adapt to changes in its immediate environment.

ACID. A substance which dissolves in water forming hydrogen ions.

ACTIVATED CARBON. Carbon which is treated by high temperature heating with steam or carbon dioxide to produce an internal porous particle structure. It is used for adsorbing gases, vapors, and colloidal particles.

ACTIVATED CARBON ADSORPTION. A method of wastewater treatment used to remove dissolved and colloidal organic material. Treatment systems can involve the application of wastewater to a fixed-bed column containing granular carbon, or the addition of powdered activated carbon to wastewater in a contacting basin.

ACTIVATED CARBON REGENERATION. Regeneration of carbon after its adsorptive capacity has been reached, involving oxidation and removal of organic matter from the carbon surface.

ACTIVATED SLUDGE. Floc produced from raw or settled wastewater by the growth of aerobic microorganisms during activated sludge treatment.

ACTIVATED SLUDGE PROCESS. A biological wastewater treatment process in which a mixture of wastewater and activated sludge is agitated and aerated. The activated sludge is subsequently separated from the treated wastewater (mixed liquor) by sedimentation and wasted or returned to the process as needed.

ADDITION POLYMERIZATION. The combination of monomers by the direct addition or combination of the monomer molecules with one another to form polymers.

ADSORPTION. A phenomenon whereby molecules in a fluid phase are attracted to and held on a solid surface by a physical or weak chemical bond.

ADSORPTION ISOTHERM. A plot used in evaluating the effectiveness of activated carbon treatment by showing the amount of impurity adsorbed versus the amount remaining. They are determined at a constant temperature by varying the amount of carbon used or the concentration of the impurity in contact with the carbon.

ADVANCED WASTE TREATMENT. Any treatment method or process employed following biological treatment to increase the removal of pollutants, to remove

substances that may be deleterious to receiving waters or the environment, or to produce a high-quality effluent suitable for reuse in any specific manner or for discharge under critical conditions. The term tertiary treatment is commonly used to denote advanced waste treatment methods.

AERATED LAGOON. Bacterial stabilization of wastewater in a natural or artificial wastewater treatment pond in which mechanical or diffused-air aeration is used to supplement the oxygen supply.

AERATION. Contact between oxygen and a liquid by one of the following methods: spraying the liquid in the air, bubbling air through the liquid, or agitation of the liquid to promote surface absorption of air.

AERATION PERIOD. (1) The theoretical time, usually expressed in hours, that the mixed liquor is subjected to aeration in an aeration tank undergoing activated-sludge treatment. It is equal to the volume of the tank divided by the volumetric rate of flow of wastes and return sludge. (2) The theoretical time that liquids are subjected to aeration.

AERATION TANK. A vessel for injecting air into the water.

AEROBIC. Taking place in the presence of free molecular oxygen.

AEROBIC BIOLOGICAL OXIDATION. Any waste treatment or process utilizing aerobic organisms, in the presence of air or oxygen, as agents for stabilizing the organic load in a wastewater.

AEROBIC DIGESTION. A process in which microorganisms obtain energy by endogenous or auto-oxidation of their cellular protoplasm. The biologically degradable constituents of cellular material are slowly oxidized to carbon dioxide, water and ammonia, with the ammonia being further converted into nitrates during the process.

ALKALI. A water-soluble metallic hydroxide that ionizes strongly.

ALKYLATION. A process wherein an alkyl group (-R) is added to a molecule.

ALUM. A hydrated aluminum sulfate or potassium aluminum sulfate or ammonium aluminum sulfate which is used as a settling agent. A coagulant.

AMMONIA NITROGEN. A gas released by the microbiological decay of plant and animal proteins. When ammonia nitrogen is found in waters, it is indicative of incomplete treatment.

AMMONIA STRIPPING. A modification of the aeration process for removing gases in water. Ammonium ions in wastewater exist in equilibrium with ammonia and hydrogen ions. As pH increases, the equilibrium shifts to the right and above pH 9 ammonia may be liberated as a gas by agitating the wastewater in the presence of air. This is usually done in a packed tower with an air blower.

AMMONIFICATION. The process in which ammonium is liberated from organic compounds by microorganisms.

AMMONOLYSIS. The formation of an amino compound using aqueous ammonia.

AMMOXIDATION. The introduction of a cyanide group into an organic compound via interaction with ammonia and oxygen to form nitriles.

ANAEROBIC. Taking place only in the absence of free molecular oxygen.

ANAEROBIC BIOLOGICAL TREATMENT. Any treatment method or process utilizing anaerobic of facultative organisms, in the absence of air, for the purpose of reducing the organic matter in wastes or organic solids settled out from wastes.

ANAEROBIC DIGESTION. Stabilization of biodegradable materials in primary and excess activated sludge by oxidation to carbon dioxide, methane and other inert products. The primary digester serves mainly to reduce volatile suspended solids (VSS), while the secondary digester is mainly for solids-liquid separation, sludge thickening, and storage.

ANION. An ion with a negative charge.

API SEPARATOR. A primary physical wastewater treatment process capable of removing free oil and settleable solids from water.

AQUEOUS SOLUTION. A solution in which water is the solvent.

AUXILIARY FACILITIES. The non-productive facilities which provide utilities and other services used by the manufacturing plant; also known as "offsite" or "off-battery-limits" facilities: Includes "non-process equipment" and other service facilities and buildings, change houses, etc.

AVERAGE. See "Mean."

AZEOTROPE. A liquid mixture that is characterized by a constant minimum or maximum boiling point which is lower or higher than that of any of the components and that distills without change in composition.

BACKWASHING. The process of cleaning a rapid sand or mechanical filter by reversing the flow of water.

BADCT (NSPS) EFFLUENT LIMITATIONS. Limitations for new sources which are based on the application of the Best Available Demonstrated Control Technology.

BASE. A substance which dissolves in water forming hydroxyl ions.

BASIN. See "Lagoon."

BAT EFFLUENT LIMITATIONS. Limitations for point sources, other than publicly owned treatment works, which are based on the application of the Best Available Technology Economically Achievable. These limitations must be achieved by July 1, 1984.

BATCH PROCESS. A process which has an intermittent flow of raw materials into the process and, consequently, an intermittent flow of product and process waste from the process.

BCT EFFLUENT LIMITATIONS. Limitations for conventional pollutants from point sources, other than publicly owned treatment works, which are based on the application of the Best Conventional Pollutant Control Technology; these limitations must be achieved by July 1, 1984.

BIOCHEMICAL OXYGEN DEMAND (BOD). A measure of organic pollution in a water or wastewater sample. It is determined by measuring the oxygen used by microorganisms to oxidize the organic contaminants of a sample under standard laboratory conditions.

BIOLOGICAL WASTEWATER TREATMENT. Forms of wastewater treatment in which aerobic or anaerobic microorganisms are used to stabilize, oxidize, and nitrify the unstable organic matter present.

BIOLOGICALLY REFRACTIVE. A substance which is partially or totally nonbiodegradable in biological waste treatment processes.

BIOTA. The plant and animal life of a stream or other water body.

BLOWDOWN. The removal of a portion of any process flow to maintain the constituents of the flow at desired levels.

BOD5. The standard test for biochemical oxygen demand (BOD) involving incubation of the water or wastewater sample at 20°C for 5 days.

BPT EFFLUENT LIMITATIONS. Limitations for point sources, other than publicly owned treatment works, which are based on the application of the Best Practicable Control Technology Currently Available. These limitations must be achieved by July 1, 1977.

BREAK POINT. The point at which impurities first appear in the effluent of a granular activated carbon adsorption bed.

BREAK POINT CHLORINATION. The addition of sufficient chlorine to destroy or oxidize all substances that create a chlorine demand with an excess amount remaining in the free residual state.

BUFFER. A solution containing either a weak acid and its salt or a weak base and its salt which thereby resists changes in acidity or basicity, i.e., resists changes in pH.

BULK ADDITION. See "Addition Polymerization."

CARBON ADSORPTION. A process used to remove pollutants from wastewaters by contacting the water with activated carbon.

CARCINOGEN. A substance that causes cancer in animal tissue.

CATALYST. A substance which changes the rate of a chemical reaction but undergoes no permanent chemical change itself.

CATION. An ion with a positive charge.

CENTRAL LIMIT THEOREM. A statistical result which states that for a sufficiently large sample size n, the distribution of means of random samples from a population with finite variance will be approximately normal in form, regardless of the form of the underlying population distribution.

CENTRATE. The liquid fraction that is separated from the solids fraction of a slurry through centrifugation.

CENTRIFUGE. (a) The treatment process whereby solids such as sludge can be separated from a liquid by the use of centrifugal force. (b) The machine used to separate solids by centrifugal force.

CHELATING. Forming a compound containing a metal ion in a ring-like molecular configuration.

CHEMICAL OXYGEN DEMAND (COD). A measure of the oxygen demand equivalent to that portion of organic matter in a sample which can be oxidized by a strong chemical oxidant.

CHLORINATION. The application of chlorine to water, sewage or industrial wastes, generally for the purpose of disinfection but frequently for accomplishing other biological or chemical results.

CLARIFICATION. Process of removing turbidity and suspended solids by settling.

CLARIFIER. A mechanical unit in which clarification is performed.

CLAYS. Aluminum silicates less than 0.002 mm (2.0 μm) in size. Because of their size, most clay types can go into colloidal suspension.

CLEAN WATER ACT OF 1977. P.L. 95-217; the 1977 Amendments to the Federal Water Pollution Control Act of 1972.

COAGULANTS. Chemicals, such as alum, iron salts, or lime, added in relatively large concentrations to reduce the forces tending to keep suspended particles apart.

COAGULATION. The process whereby chemicals are added to a wastewater resulting in a reduction of the forces tending to keep suspended particles apart. The process occurs in a rapid or flash mix basin.

COLLOID. Tiny solid, semi-solid, or liquid particulates in a solvent that are not removable by sedimentation.

COMBINED SEWER. A sewer which carries both sewage and storm water run-off.

COMPLEXING. Forming a compound containing a number of parts, often used to describe a metal atom associated with a set of organic ligands.

COMPOSITE SAMPLE. A combination of individual samples of wastes taken at selected intervals to minimize the effect of the variations in individual samples. Individual samples making up the composite may be of equal volume or be roughly proportioned to the volume of flow of liquid at the time of sampling.

CONCENTRATION. The total mass of the suspended or dissolved particles contained in a unit volume at a given temperature and pressure.

CONDENSATION. (a) The change of state of a substance from the vapor to the liquid form. (b) A chemical reaction in which two or more molecules combine, with the separation of water or some other simple substance.

CONDUCTIVITY. A measurement of electrolyte concentration by determining electrical conductance in a water sample.

CONSENT DECREE. The Settlement Agreement entered into by EPA with the Natural Resources Defense Council and other environmental groups and approved by the U.S. District Court for the District of Columbia on June 7, 1976 (8 ERC 2120, D.D.C. 1976), modified on March 9, 1979 (12 ERC 1833, D.D.C. 1979) and again by Order of the Court dated October 26, 1982. One of the principal provisions of the Settlement Agreement was to direct EPA to consider an extended list of 65 classes of toxic pollutants in 21 industrial categories in the development of effluent limitations guidelines and new source performance standards. This list has since been limited to 129 specific toxic pollutants and expanded to 34 industrial categories.

CONTACT PROCESS WASTEWATERS. Process-generated wastewaters which have come in direct or indirect contact with the reactants used in the process. These include such streams as contact cooling water, filtrates, centrates, wash waters, etc.

CONTACT STABILIZATION. Aerobic digestion.

CONTINUOUS PROCESS. A process which has a constant flow of raw materials into the process and consequently a constant flow of product from the process.

CONTRACT DISPOSAL. Disposal of waste products through an outside party for a fee.

CONVENTIONAL POLLUTANTS. Constituents of wastewater as determined under Section 304(a)(4) of the Clean Water Act of 1977, including pollutants classified as biochemical oxygen demand, suspended solids, fecal coliform, pH, and oil and grease.

COOLING WATER - CONTAMINATED. Water used for cooling purposes only which may become contaminated either through the use of water treatment chemicals such as corrosion inhibitors or biocides, or by direct contact with process materials and/or wastewater.

COOLING WATER - UNCONTAMINATED. Water used for cooling purposes only which has no direct contact with any raw material, intermediate, or final product and which does not contain a level of contaminants detectably higher than that of the intake water.

CRACKING. A process wherein heat and pressure are used for the rearrangement of the molecular structure of hydrocarbons or low-octane petroleum fractions.

CRYSTALLIZATION. The formation of solid particles within a homogeneous phase. Formation of crystals separates a solute from a solution and generally leaves impurities behind in the mother liquid.

CYANIDE A. Cyanides amendable to chlorination as described in "1972 Annual Book of ASTM Standards" 1972: Standard D 2036-72, Method B, p. 553.

CYANIDE, TOTAL. Total cyanide as determined by the test procedure specified in 40 CFR Part 136 (Federal Register, Vol. 38, no. 199, October 16, 1973).

CYCLONE. A conical shaped vessel for separating either entrained solids or liquid materials from the carrying air or vapor. The vessel has a tangential entry nozzle at or near the largest diameter, with an overhead exit for air or vapor and a lower exit for the more dense materials.

DAILY DATA. Flow and pollutant measurements (BOD, COD, TOC, pH, etc.) taken by certain plants on a daily basis for extended periods of time.

DAILY MAXIMUM LIMITATIONS. Effluent limitations for particular priority pollutants determined by multiplying long-term median effluent concentrations by appropriate variability factors.

DEALKYLATION. The removal of an alkyl group (-R) from a molecule.

DEEP WELL INJECTION. Disposal of wastewater into a deep well such that a porous, permeable formation of a larger area and thickness is available at sufficient depth to ensure continued, permanent storage.

DEGREASING. The process of removing greases and oils from sewage, waste and sludge.

DEHYDRATION. The removal of water from a material.

DEHYDROGENATION. The removal of one or more hydrogen atoms from an organic molecule.

DEMINERALIZATION. The removal of ions from wastewater. Demineralization processes include reverse osmosis, electrodialysis, and ion exchange.

DENITRIFICATION. Bacterial mediated reduction of nitrate to nitrite. Other bacteria may further reduce the nitrite to ammonia and finally nitrogen gas. This reduction of nitrate occurs under anaerobic conditions. The nitrate replaces oxygen as an electron acceptor during the metabolism of carbon

compounds under anaerobic conditions. The heterotrophic microorganisms which participate in this process include pseudomonades, achromobacters and bacilli.

DESORPTION. The reverse of adsorption. A phenomenon whereby an adsorbed molecule leaves the surface of the adsorbent.

DIAZOTIZATION. The conversion of an amine (-NH2) to a diazonium salt by reaction with nitrous acid.

DIGESTER. A tank in which biological decomposition (digestion) of the organic matter in sludge takes place.

DIGESTION. (a) The biological decomposition of organic matter in sludge. (b) The process carried out in a digester.

DIRECT DISCHARGE. Discharge of wastewater into navigable water.

DISCHARGE. (a) To dispose of wastewater before or after treatment to a water source (stream, river, etc.) or to an additional treatment facility (e.g., POTW). (b) The wastewater being disposed.

DISSOLVED AIR FLOTATION. A flotation process that adds air to wastewater in the form of fine bubbles which become attached to suspended sludge particles, increasing the buoyancy of the particles and producing more positive flotation.

DISSOLVED OXYGEN (DO). The oxygen dissolved in sewage, water or other liquids, usually expressed either in milligrams per liter or percent of saturation. It is the test used in BOD determination.

DISTILLATION. A separation or purification process that involves vaporization of a portion of a liquid feed by heating and subsequent condensation of the vapor.

DOUBLE-EFFECT EVAPORATORS. Double effect evaporators are two evaporators in series where the vapors from one are used to boil liquid in the other.

DRYING BED. A wastewater treatment unit usually consisting of a bed of sand on which sludge is placed to dry by evaporation and drainage.

DUAL MEDIA FILTRATION. A deep-bed filtration system utilizing two separate and discrete layers of dissimilar media (e.g., anthracite and sand) placed one on top of the other to perform the filtration function.

EFFLUENT. (a) A liquid which leaves a unit operation or process. (b) Sewage, water or other liquids which flow out of a reservoir basin, treatment plant or any other unit operation.

EFFLUENT LIMITATION. A maximum permissible concentration or mass of pollutant per unit of production (or time or other unit) of selected constituents of effluent that is subject to regulation under the National Pollutant Discharge Elimination System (NPDES).

ELECTRODIALYSIS. The separation of a substance from solution through a membrane accomplished by the application of an electric potential across to the membrane.

ELECTROLYTIC. Relating to a chemical change produced by passage of a current through a conducting substance (such as water).

ELUTION. (1) The process of washing out or removing a substance through the use of a solvent. (2) In an ion exchange process, the stripping of adsorbed ions from an ion exchange resin by passing solutions containing other ions in relatively high concentrations through the resin.

ELUTRIATION. A process of sludge conditioning whereby the sludge is washed, either with fresh water or plant effluent, to reduce the sludge alkalinity and fine particles, thus decreasing the amount of required coagulant in further treatment steps or in sludge dewatering.

EMULSION. A suspension of fine droplets of one liquid in another.

EMULSION ADDITION. See "Addition Polymerization."

END-OF-PIPE (EOP) TECHNOLOGIES. Final treatment processes used to remove or alter selected constituents of the wastewater from manufacturing operations.

ENTRAINMENT SEPARATOR. A device to remove liquid and/or solids from a gas stream. Energy source is usually derived from pressure drop to create centrifugal force.

EQUALIZATION. A process by which variations in flow and composition of a waste stream are averaged in an impoundment or basin.

EQUALIZATION BASIN. A holding basin in which variations in flow and composition of a liquid are averaged.

ESTERIFICATION. The production of esters from carboxylic acids by the replacement of the hydrogen of the hydroxyl group with a hydrocarbon group.

EVAPORATION POND. An open holding facility which depends primarily on climatic conditions such as evaporation, precipitation, temperature, humidity, and wind velocity to effect dissipation (evaporation) of wastewater. External means such as spray recirculation or heating can be used to increase the rate of evaporation.

EXISTING SOURCE. Any facility from which there is or may be a discharge of pollutants, the construction of which is commenced before the publication of proposed regulations prescribing a standard of performance under Section 306 of the Act.

FACULTATIVE. Having the ability to live under both aerobic or anaerobic conditions.

FACULTATIVE LAGOON. A treatment method combining both aerobic and anaerobic lagoons. It is divided by loading and thermal stratifications into an aerobic surface and an anaerobic bottom.

FEDERAL WATER POLLUTION CONTROL ACT AMENDMENTS OF 1972. Public Law 92-500 which provides the legal authority for current EPA water pollution abatement projects, regulations, and policies. The Federal Water Pollution Control Act was amended further on December 27, 1977, in legislation referred to as The Clean Water Act (P.L. 95-217).

FEEDSTOCK. The material initially supplied to a process and used in the production of a final product.

FERMENTATION. Oxidative decomposition of complex substances through the action of enzymes or ferments produced by microorganisms.

FERRITE. A chemical compound containing iron.

FID. Flame ionization detection.

FILTER CAKES. Wet solids generated by the filtration of solids from a liquid. This filter cake may be a pure material (product) or a waste material containing additional fine solids (i.e., diatomaceous earth) that has been added to aid in the filtration.

FILTRATION. A process whereby a liquid is passed through a porous medium in order to capture and remove particles from the liquid.

FLOCCULANTS. Water-soluble organic polyelectrolytes that are used alone or in conjunction with inorganic coagulants, such as lime, alum or ferric chloride, or with coagulant aids to agglomerate solids suspended in aqueous systems.

FLOCCULATION. The agglomeration of colloidal and finely divided suspended matter that will settle by gravity.

FLOTATION. The raising of suspended matter as scum to the surface of the liquid in a tank by aeration, the evolution of gas, chemicals, electrolysis, heat, bacterial decomposition or natural density difference, and the subsequent removal of the scum by skimming.

FLOW RATES. The amount of water or wastewater going into or out of a plant during a certain time period (GPM, MGD, etc).

FRACTIONATION (OR FRACTIONAL DISTILLATION). The separation of constituents, or group of constituents, of a liquid mixture of miscible and volatile substances by vaporization and recondensing at specific boiling point ranges.

GC. Gas chromatography.

GC/CD. Gas chromatography/conventional detectors.

GC/MS. Gas chromatography/mass spectrometry.

GENERALIZED PLANT CONFIGURATION (GPC). Groups of organic and/or plastic product/processes that represent entire manufacturing facilities or major portions of plants, developed from responses to the 308 questionnaires. GPCs have been used as part of EPA's investigation and computer analysis of treatment unit process effectiveness and costs for the Organic Chemicals and Plastics/Synthetic Fibers Industries.

GENERIC PROCESS CHEMISTRY. As defined in this document, classes of chemical reactions which share a common mechanism or yield related products (e.g., chlorination, oxidation, ammoxidation, cracking and reforming, and hydrolysis). Forty-one major generic processes have been identified in the Organic Chemicals and Plastics/Synthetic Fibers Industries.

GRAB SAMPLE. (a) Instantaneous sampling; (b) a sample taken at a random location and at a random time.

GRAVITY SEPARATOR. A treatment unit that uses density differences and gravitational pull to separate two immiscible substances.

GRIT CHAMBER. A small detention chamber or an enlargement of a sewer designed to reduce the velocity of flow of the liquid and permit the separation of mineral from organic solids by differential sedimentation.

GROUND WATER. The body of water that is retained in the saturated zone which tends to move by hydraulic gradient to lower levels.

HALOGENATION. The incorporation of one of the halogen elements (bromine, chlorine, or fluorine) into a chemical compound.

HARDNESS. A measure of the capacity of water for precipitating soap. It is reported as the hardness that would be produced if a certain amount of $CaCO_3$ were dissolved in water.

HEAVY METALS. A general name given for the ions of metallic elements, such as copper, zinc, iron, chromium and aluminum. Heavy metals are normally removed from a wastewater by the formation of an insoluble precipitate (usually a metallic hydroxide).

HYDROCARBON. A compound containing only carbon and hydrogen.

HYDROFORMYLATION. Addition of a formyl molecule (H-CHO) across a double bond to form an aldehyde.

HYDROGENATION. A reaction of hydrogen with an organic compound.

HYDROLYSIS. A chemical reaction in which water reacts with another substance to form two or more new substances.

HYDROXIDE. A chemical compound containing the radical group OH^-.

IMHOFF TANK. A combination wastewater treatment tank which allows sedimentation to take place in its upper compartment and digestion to take place in its lower compartment.

IN-PLANT CONTROL TECHNOLOGIES. Controls or measures applied within the manufacturing process to reduce or eliminate pollutant and hydraulic loadings of raw wastewater.

IN-PLANT SOURCE CONTROL. Controls or measures applied at the source of a waste to eliminate or reduce the necessity for further excessive treatment.

INCINERATION. The combustion (by burning) of organic matter in wastewater sludge.

INDIRECT DISCHARGE. The discharge of wastewaters to publicly owned treatment works (POTW).

INFLUENT. Any sewage, water or other liquid, either raw or partly treated, flowing into a reservoir, basin, treatment plant, or any part thereof. The influent is the stream entering a unit operation.

ION EXCHANGE. A treatment process in which metal ions and other contaminants may be removed from waters by exchanging them with ions on a solid (resin) matrix.

LAGOON. A pond containing raw or partially treated wastewater in which aerobic or anaerobic stabilization occurs.

LANDFILL. A controlled dump for solid wastes in which garbage, trash, etc., is buried in layers separated and covered by dirt.

LC50. Lethal concentration 50; the concentration of a toxic material at which 50 percent of the exposed test organisms die.

LD50. Lethal dose 50; the dose of a toxic material at which 50 percent of the exposed test organisms die.

LEACH. To dissolve out by the action of a percolating liquid, such as water, seeping through a sanitary landfill.

LIME. A substance formed from limestone, which is an accumulation of organic remains consisting mostly of calcium carbonate. When burned, limestone yields lime (a solid). The hydrated form of chemical lime is calcium hydroxide.

LIQUID-LIQUID EXTRACTION. The removal of a solute from another liquid by mixing that combination with a solvent preferential to the substance to be removed.

MASS FLOW. A measure of the transfer of mass in units of mass per time-area mass (time x area).

MEAN. Average; the sum of the items in a set divided by the number of items.

MEDIAN. The number lying in the middle of an increasing or decreasing series of numbers such that the same number of values appears above the median as do below it.

METAL CATALYZED ADDITION. See "addition polymerization."

MICROBIAL. Of or pertaining to microbes, single-celled organisms (e.g., bacteria).

MIXED LIQUOR. A mixture of activated sludge and organic matter undergoing activated sludge treatment in an aeration tank.

MIXED LIQUOR SUSPENDED SOLIDS (MLSS). A measure of the concentration of matter in a biological treatment process.

MODE. The number which occurs with the greatest frequency in a set of values.

MOLECULAR WEIGHT. The relative weight of a molecule compared to the weight of an atom of carbon taken as exactly 12.00; the sum of the atomic weights of the atoms in a molecule.

MONTHLY (4-DAY) AVERAGE LIMITATIONS. Effluent limitations for particular priority pollutants determined by multiplying long-term median effluent concentrations by appropriate variability factors.

MUTAGEN. Substance causing mutations or changes in the genetic material of an organisms.

NATIONAL POLLUTION DISCHARGE ELIMINATION SYSTEM (NPDES). A federal program requiring industry to obtain permits to discharge plant effluents to the nation's water courses.

NAVIGABLE WATERS. Includes all navigable waters of the United States; tributaries of navigable waters; interstate waters; intrastate lakes, rivers and streams which are utilized by interstate travellers for recreational or other purposes; intrastate lakes, rivers and streams from which fish or shellfish are taken and sold in interstate commerce; and intrastate lakes, rivers and streams which are utilized for industrial purposes by industries in interstate commerce.

NEUTRALIZATION. The restoration of the hydrogen or hydroxyl ion balance in a solution so that the ionic concentrations of each are equal.

NEW SOURCE. Any facility from which there is or may be a discharge of pollutants, the construction of which is commenced after the promulgation of proposed regulations prescribing a standard of performance under section 306 of the Act.

NITRATE NITROGEN. The final decomposition product of the organic nitrogen compounds. Determination of this parameter indicates the degree of waste treatment.

NITRATION. The replacement of a hydrogen on a carbon atom with a nitro group ($-NO_2$) through the use of nitric acid or mixed acid.

NITRIFICATION. The conversion of nitrogenous matter into nitrates by bacteria.

NITRITE NITROGEN. An intermediate stage in the decomposition of organic nitrogen to the nitrate form. Tests for nitrite nitrogen can determine whether the applied treatment is sufficient.

NON-CONTACT COOLING WATER. Water used for cooling that does not come into direct contact with any raw material, intermediate product, waste product or finished product.

NON-CONTACT PROCESS WASTEWATERS. Wastewaters generated by a manufacturing process which have not come in direct contact with the products, wastes, or reactants used in the process. These include such streams as noncontact cooling water, cooling tower blowdown, boiler blowdown, etc.

NON-CONVENTIONAL POLLUTANTS. Pollutant parameters which have not been designated as either conventional pollutants or toxic pollutants.

NON-WATER QUALITY ENVIRONMENTAL IMPACT. Effects of wastewater control and treatment technologies upon aspects of the environment other than water, including, but not limited to, air pollution, noise, radiation, sludge and solid waste generation, and energy usage. Consideration of non-water quality environmental impacts during the development of effluent limitations regulations is required in sections 304(b) and 306 of the Clean Water Act.

NORMAL SOLUTION. A solution that contains 1 gm molecular weight of the dissolved substance divided by the hydrogen equivalent of the substance (that is, one gram equivalent) per liter of solution. Thus, a one normal solution of sulfuric acid (H_2SO_4, mol. wt. 98) contains 98/2 or 49 gms of H_2SO_4 per liter.

NSPS. New Source Performance Standards for new sources.

NUTRIENT. Any substance assimilated by an organisms which promotes growth and replacement of cellular constituents.

NUTRIENT ADDITION. The process of adding nitrogen or phosphorous in a chemically combined form to a waste stream.

OIL AND GREASE. (a) Oligenous liquids or gels that form scums and slicks on water. (b) Those substances soluble in freon which are present in water and wastes. Oil and grease are conventional pollutants as defined under EPA regulations.

OIL-RECOVERY SYSTEM. Equipment used to reclaim oil from wastewater.

ORGANIC LOADING. In the activated sludge process, the food to microorganisms (F/M) ratio defined as the amount of biodegradable material available to a given amount of microorganisms per unit of time.

OXIDATION. (a) A process in which an atom or group of atoms loses electrons. (b) The introduction of one or more oxygen atoms into a molecule, accompanied by the release of energy.

OXIDATION POND. A man-made lake or body of water in which wastes are consumed by bacteria. An oxidation pond receives an influent which has gone through primary treatment in contrast to a lagoon which receives raw untreated sewage.

OXIDATION/REDUCTION (OR). A class of chemical reactions in which one of the reacting species gives up electrons (oxidation) while another species in the reaction accepts electrons (reduction).

OXO PROCESS. A process wherein olefinic hydrocarbon vapors are passed over cobalt catalysts in the presence of carbon monoxide and hydrogen to produce alcohols, aldehydes, and other oxygenated organic compounds. Also known as hydrocarbonylation and hydroformylation.

OXYACETYLATION. A process using ethylene, acetic acid, and oxygen commonly used to produce vinyl acetate.

OXYGEN ACTIVATED SLUDGE. An activated sludge process using pure oxygen as an aeration gas (rather than air). This is a patented process marketed by Union Carbide under the trade name "Unox".

OXYGEN, AVAILABLE. The quantity of atmospheric oxygen dissolved in the water of a stream; the quantity of dissolved oxygen available for the oxidation of organic matter in sewage.

OXYGEN, DISSOLVED. The oxygen (usually designated as DO) dissolved in sewage, water, or another liquid and usually expressed in parts per million or percent of saturation.

OZONATION. A water or wastewater treatment process involving the use of ozone as an oxidizing agent.

OZONE. That molecular oxygen with three atoms of oxygen forming each molecule. The third atom of oxygen in each molecule of ozone is loosely bound and easily released. Ozone is used sometimes for the disinfection of water but more frequently for the oxidation of taste-producing substances, such as phenol, in water and for the neutralization of odors in gases or air.

PARAMETER. A representative variable which describes some sort of pollution (BOD, TOC, etc.).

PARTS PER MILLION (PPM). Parts by weight in sewage analysis, equal to milligrams per liter divided by the specific gravity. Parts per million (ppm) is always understood to imply a weight/weight ratio, although in practice volume may be measured instead of weight.

PERCOLATION. The movement of water beneath the ground surface both vertically and horizontally, but above the groundwater table.

PHOSPHATE. Phosphate ions exist as an ester or salt of phosphoric acid, such as calcium phosphate rock. In municipal wastewater, it is most frequently present as orthophosphate.

PHOSPHORUS PRECIPITATION. The addition of the multivalent metallic ions of calcium, iron and aluminum to wastewater to form insoluble precipitates with phosphorus.

PHYSICAL-CHEMICAL WASTEWATER TREATMENT. Processes that utilize physical and chemical means to treat wastewaters.

POINT SOURCE. Any discernible, confined, and discrete conveyance from which pollutants are or may be discharged.

POINT SOURCE CATEGORY. A collection of industrial sources with similar function or product, established for the purpose of establishing federal standards for the disposal of wastewater.

POLISHING. A final water treatment step used to remove any remaining organics from the water.

POLISHING PONDS. Stabilization lagoons used as a final treatment step to remove any remaining organics.

POLLUTANT LOADING. The ratio of the total daily mass discharge of a particular pollutant to the total daily production expressed in terms of (g pollutant)/(kg wet production).

POLYELECTROLYTES. Linear or branched synthetic chemicals (polymers) used to speed up the removal of solids from sewage. These chemicals cause solids to coagulate or clump together more rapidly than do chemicals such as alum or lime. They can be anionic (negative charge), nonionic (positive and negative charges) or cationic (positive charge--the most common). They have high molecular weights and are water-soluble. Compounds similar to the polyelectrolyte flocculants include surface-active agents and ion exchange resins. The former are low molecular weight, water soluble compounds used to disperse solids in aqueous systems. The latter are high molecular weight, water-insoluble compounds used to selectively replace certain ions already present in water with more desirable or less noxious ions.

POLYMER. A large molecule consisting of 5 or more identical connecting units.

PRECIPITATION. The phenomenon which occurs when a substance held in solution passes out of that solution into solid form.

PRETREATMENT. Any wastewater treatment process used to reduce the pollution load before the wastewater is discharged to a publicly owned treatment works (POTW).

PRIMARY TREATMENT. The first major treatment in a wastewater treatment works normally consisting of clarification, neutralization, and related physical/chemical treatment.

PRIORITY POLLUTANTS. One hundred twenty-six compounds that are a subset of the toxic pollutants specified in the 1976 Consent Decree and that were the focus of study in the development of BAT regulations for the Organic Chemicals and Plastics/Synthetic Fibers Industry.

PROCESS EQUIPMENT. All equipment and appurtenances employed in the actual manufacturing process.

PROCESS WASTEWATER. Any water which, during manufacturing or processing, comes into direct contact with or results from the production or use of any raw material, intermediate product, finished product, by-product, or waste product.

PROCESS WATER. Any water (solid, liquid or vapor) which, during the manufacturing process, comes into direct contact with any raw materials, intermediate product, by-product, waste product, or finished product.

PRODUCT/PROCESS. That chemical process used for producing a certain chemical product; one process may be used for producing many products and, similarly, one product may be made using different chemical processes.

PUBLICLY OWNED TREATMENT WORKS (POTW). Facilities that collect, treat, or otherwise dispose of wastewaters, and are owned and operated by a village, town, county, authority or other public agency.

PYROLYSIS. The transformation of a compound into one or more substances by heat alone (i.e., without oxidation).

pH. A measure of the acidity or alkalinity of a water sample; equal to the negative common logarithm of the hydrogen ion concentration.

QA/QC. Quality assurance/quality control.

RAW WASTE LOAD. The quantity of pollutant in wastewater prior to treatment.

RECEIVING WATERS. Rivers, lakes, oceans or other courses that receive treated or untreated wastewaters.

RECYCLING. The reuse of materials by returning them to the process from which they came or by using them in another process.

REDUCTION. A process in which an atom (or group of atoms) gains electrons.

REFORMING. A process wherein heat and pressure are used for the rearrangement of the molecular structure of hydrocarbons or low-octane petroleum fractions.

REGENERATION. The renewing for reuse of materials such as activated carbon, single ion exchange resins, and filter beds by appropriate means to remove organics, metals, solids, etc.

RESIN. The solid substrate used in ion exchange process.

RETENTION TIME. Volume of the vessel divided by the flow rate through the vessel.

REVERSE OSMOSIS. The separation of a solvent and a solute by the application of pressure in excess of natural osmotic pressure to the solution side of the membrane forcing the solvent to the other side.

ROTATING BIOLOGICAL CONTACTOR. See "rotating biological disc."

ROTATING BIOLOGICAL DISC. A treatment unit used to remove pollutants from wastewaters whereby rotating discs containing sludge are partially submerged into the wastewater allowing the sludge microorganisms to degrade the wastes.

SANITARY LANDFILL. A sanitary landfill is a land disposal site employing an engineered method of disposing of solid wastes on land in a manner that minimizes environmental hazards by spreading the wastes in thin layers, compacting the solid waste to the smallest practical volume, and applying cover material at the end of each operating day. The two basic sanitary landfill methods are trench fill and area or ramp fill. The method chosen is dependent on many factors such as drainage and type of soil at the proposed landfill site.

SCREENING. The removal of relatively coarse, floating, and suspended solids by straining through racks or screens.

SECONDARY TREATMENT. The second major step in a waste treatment system, generally considered to be biological treatment.

SEDIMENTATION. The separation of suspended solids from wastewater by gravity.

SEED. To introduce microorganisms into a culture medium.

SETTLEABLE SOLIDS. Suspended solids which will settle out of a liquid waste in a given period of time.

SETTLEMENT AGREEMENT. See "Consent Agreement."

SETTLING PONDS. An impoundment for the settling out of solids.

SIC CODES. Standard Industrial Classification Codes used by the U.S. Department of Commerce to denote segments of industry.

SKIMMING. The process of removing floating grease or scum from the surface of wastewater in a tank.

SLUDGE. The accumulated solids separated from liquids, such as water or wastewater, during processing.

SLUDGE POND. A basin used for the storage, digestion, or dewatering of sludge.

SOLUBILITY. The ability of a substance to dissolve or become soluble in another substance, usually water.

SOLUTE. The substance dissolved in a solvent.

SOLVENT. A liquid commonly used to dissolve or disperse another substance.

SOLVENT EXTRACTION. The extraction of selected components from a mixture of two or more components by treating with a substance that preferentially dissolves one or more of the components in the mixture (liquid-liquid extraction).

SPENT. Used material that will no longer accomplish that purpose for which it is designed (e.g., spent activated carbon which will no longer adsorb pollutants to an acceptable degree).

SPRAY EVAPORATION. A method of wastewater disposal in which the water in a holding lagoon equipped with spray nozzles is sprayed into the air to expedite evaporation.

SPRAY IRRIGATION. A method of disposing of some wastewaters by spraying them on land, usually from pipes equipped with spray nozzles.

STABILIZATION POND. Large, shallow, earthen basins used for the treatment of wastewater by natural processes involving the use of both algae and bacteria.

STANDARD OF PERFORMANCE. A maximum concentration or mass of pollutant per unit of production (or time or other unit) for selected constituents of an effluent that are subject to regulation.

STEAM DISTILLATION. Fractionation in which steam is introduced as one of the vapors or in which steam is injected to provide the heat of the system.

STEAM STRIPPING. A treatment process used to remove relatively volatile components by passing steam through a solution which transfers the components from a liquid mixture to the gas phase.

STILL BOTTOM. The residue remaining after distillation of a material. The residue can vary from a watery slurry to a thick tar which may turn hard when cool.

STOICHIOMETRIC. Characteristic of a chemical reaction in which reactants are present in proportions such that there is no excess of any reactant following completion of the reaction.

SUBCATEGORY. A segment of a point source category where most characteristics of that segment are related but are distinct from other segments of the category and are therefore subject to uniform national standards.

SUBSTRATE. (1) Reactant portion of any biochemical reaction; the material transformed into a product. (2) Any substance used as a nutrient by a microorganisms. (3) The liquor in which activated sludge or other material is kept in suspension.

SUPERNATANT. A substance floating above or on the surface of another substance.

SURGE TANK. A tank for absorbing and dampening the wavelike motion of a volume of liquid; an in-process storage tank that acts as a flow buffer between process tanks.

SUSPENDED SOLIDS. Solids that either float on the surface of, or are in suspension in, water, wastewater, or other liquids.

SUSPENSION ADDITION. See "Addition Polymerization."

TERATOGEN. Substance causing birth defects in the offspring following exposure of one or both of the parents.

TERTIARY TREATMENT. The third major step in a waste treatment facility, generally referring to treatment processes following biological treatment.

THICKENING. A process by which sludge is concentrated, usually by sedimentation or centrifugation.

308 DATA. Information gathered from plants under authority of Section 308 of the Clean Water Act.

TOTAL ORGANIC CARBON (TOC). A measure of the organic contamination of a water sample.

TOTAL SUSPENDED SOLIDS (TSS). The entire amount of suspended solids in a sample of water.

TOXIC POLLUTANTS. Pollutants declared "toxic" under Section 307(a)(1) of the Clean Water Act.

TREATMENT TECHNOLOGY. Any pretreatment or end-of-line treatment unit which is used in conjunction with process wastewater. The unit may be used at any point from the process wastewater source to final discharge from plant property.

TRICKLING FILTER. A treatment unit consisting of broken stone or other coarse material over which wastewater is applied and is allowed to trickle through. Attached to the media are microorganisms (sludge) which degrade wastes in the wastewater.

ULTRAFILTRATION. A treatment similar to reverse osmosis except that ultrafiltration treats solutions with larger solute particles so that the solvents can more easily filter through the membrane.

UPSET. An unintentional noncompliance occurring for reasons beyond control of the permittee.

VACUUM FILTRATION. A process used to reduce the water content of sludge. A filter consisting of a cylindrical drum mounted on a horizontal axis and covered with a filter cloth revolves partially submergenced in the liquid, and a vacuum is maintained under the cloth for the larger part of each revolution to extract moisture. The cake which forms on the filter is continuously scraped off.

VARIABILITY FACTORS. Pollutant-specific peaking factors that relate the numerical limitations for the maximum day and the monthly average to the long-term median value.

VOLATILE SUSPENDED SOLIDS (VSS). The quantity of suspended solids lost after the ignition of total suspended solids.

VOLATILITY. The ability of a substance to volatilize or evaporate.

WASTE STREAM. A separated or combined polluted water flow resulting from a plant's process(es).

WASTE TREATMENT PLANT. A series of tanks, screens, filters, pumps and other equipment by which pollutants are removed from water.

WASTEWATER. Process water contaminated to such an extent that it cannot be reused in the process without repurification.

WATER USAGE. Ratio of the spent water from a manufacturing operation to the total production, expressed in terms of (liters of wastewater/day)/(kilogram of production/day).

WET AIR POLLUTION CONTROL. The technique of air pollution abatement utilizing water as an absorptive media.

WET SCRUBBER. An air pollution control device which involves the wetting of particles in an air stream and the impingement of wet or dry particles on collecting surfaces, followed by flushing.

ZERO DISCHARGE. Methods of wastewater discharge from point sources which do not involve discharge to navigable waters either directly or indirectly through publicly owned treatment works. Zero discharge methods include evaporation ponds, deep well injection, and land application.

TECHNICAL REPORT DATA
(Please read Instructions on the reverse before completing)

1. REPORT NO. EPA 440/1-83/009b	2.	3. RECIPIENT'S ACCESSION NO. PB83 205641
4. TITLE AND SUBTITLE Development Document for Effluent Limitations Guidelines and Standards for the Organic Chemicals and Plastics and Synthetic Fibers Point Source Category		5. REPORT DATE February 1983 preparation 6. PERFORMING ORGANIZATION CODE
7. AUTHOR(S) Vol II, (BAT) E. H. Forsht		8. PERFORMING ORGANIZATION REPORT NO.
9. PERFORMING ORGANIZATION NAME AND ADDRESS Effluent Guidelines Division WH-552 U.S. Environmental Protection Agency 401 M St. S.W. Washington, D.C. 20460		10. PROGRAM ELEMENT NO. B46B2B 11. CONTRACT/GRANT NO. 68-01-6701
12. SPONSORING AGENCY NAME AND ADDRESS U.S. Environmental Protection Agency 401 M St. S.W. Washington, D.C. 20460		13. TYPE OF REPORT AND PERIOD COVERED Proposed Development Document 14. SPONSORING AGENCY CODE

15. SUPPLEMENTARY NOTES

16. ABSTRACT

This document presents the findings of studies of the organic chemicals and plastics and synthetic fibers manufacturing point source category for the purpose of developing effluent limitations guidelines for existing point sources. Effluent limitations guidelines proposed herein are for "best practicable technology", "best conventional technology", and "best available technology", new source performance standards and pretreatment standards as required under Sections 301, 304, 306, 307, and 501 of the Clean Water Act (the Federal Water Pollution Control Act Amendments of 1972, 33 U.S.C. 1251 et seq., as amended by the Clean Water Act of 1977, P.L. 95-217 (the "Act")), and as required under the Settlement Agreement in Natural Resources Defense Council, Inc. v. Train, 8 ERC 2120 (D.D.C. 1976), modified 12 ERC 1833 (D.D.C. 1979), and modified again by order of the court dated October 26, 1982.

This document contains the supporting data and rationale for development of the effluent limitations and guidelines including subcategorization schemes, wastewater characteristics, treatment technologies and costs.

17. KEY WORDS AND DOCUMENT ANALYSIS

a. DESCRIPTORS	b. IDENTIFIERS/OPEN ENDED TERMS	c. COSATI Field/Group
Wastewater, Treatment, EPA, Regulations, BPT, BAT, NSPS, PSES, PSNS, Organic Chemicals, Plastics, Synthetic Fibers		

18. DISTRIBUTION STATEMENT Release Unlimited	19. SECURITY CLASS *(This Report)*	21. NO. OF PAGES 334
	20. SECURITY CLASS *(This page)*	22. PRICE

EPA Form 2220-1 (9-73)