United States
Environmental Protection
Agency

Air and Radiation

EPA420-R-92-009
December 1992

Procedures for Emission Inventory Preparation

Volume IV: Mobile Sources

Printed on Recycled Paper

EPA420-R-92-009
December 1992

Procedures for Emission Inventory Preparation

Volume IV: Mobile Sources

Emission Planning and Strategies Division
Office of Mobile Sources
and
Technical Support Division
Office of Air Quality Planning and Standards
U.S. Environmental Protection Agency

NOTICE

This technical report does not necessarily represent final EPA decisions or positions. It is intended to present technical analysis of issues using data which are currently available. The purpose in the release of such reports is to facilitate the exchange of technical information and to inform the public of technical developments which may form the basis for a final EPA decision, position, or regulatory action.

ACKNOWLEDGMENT

Several people in EPA's Emission Planning and Strategies Division have contributed to this document. Their names and contributions are listed below.

Chapter 1	Natalie Dobie	Introduction
Chapter 2	Natalie Dobie	Overview
Chapter 3	Terry Newell Natalie Dobie	MOBILE4. 1 Vehicle Miles Traveled
Chapter 4	Greg Janssen Joe Somers	Nonroad Sources
Chapter 5	Richard Wilcox	Aircraft
Chapter 6	Peter Okurowski	Locomotives

NOTICE

The Procedures For Emission Inventory Preparation consists of these five volumes:

Volume I - Emission Inventory Fundamentals
Volume II - Point Sources
Volume III - Area Sources
Volume IV - Mobile Sources
Volume V - Bibliography

Volume I is a guide to the managerial and technical aspects of the emission inventory. It outlines the information sources available, methods of estimating emissions, data validation and quality assurance techniques, as well as procedures to maintain and update the inventory. Also included are a detailed analysis of the manpower and resources required to derive each component of an emission inventory and a comprehensive glossary.

Volume II discusses point sources identification, data collection, emissions calculation, and data presentation. It establishes standardized methods and procedures to develop a point source data base.

Volume III outlines the methods of collecting and handling emission data from sources too small and/or too numerous to be surveyed individually. Collectively, these sources are known as area sources. Procedures are presented to identify area source categories. Important reference material that can be used to determine the activity levels associated with area source categories are also listed. Finally, emission factors, emission calculations, pollutant allocation and projection techniques, and methods of data presentation are included to assist in the preparation and maintenance of the area source emission inventories.

Volume IV presents an overview of the mobile source category as a whole and identifies specific methods that can be used to identify and inventory sources, estimate emissions, and establish and maintain a useful, current mobile source emissions inventory.

Volume V presents an extensive listing of currently available reference material designed to assist in the development of an emission inventory. A concise abstract is provided for each reference cited, outlining the pertinent emission inventory information.

These volumes are intended to present emission inventory procedures and techniques applicable to state and local air programs. Please forward comments and suggestions for improvement to the U.S. Environmental Protection Agency, Monitoring And Reports Branch (MD-14), Research Triangle Park, North Carolina 27711.

Other U.S. EPA emission inventory procedures publications include:

Emission Inventory Requirements For Ozone State Implementation Plans. EPA-450/4-91-010. U. S. Environmental Protection Agency. Office of Air Quality Planning and Standards. Research Triangle Park. North Carolina. March 1991.

Procedures for the Preparation of Emission Inventories for Carbon Monoxide and Precursors of Ozone. Volume I: General Guidance for Stationary Sources. EPA-450/4-91-016. U. S. Environmental Protection Agency. Office of Air Quality Planning and Standards. Research Triangle Park. North Carolina. May 1991.

Procedures for the Preparation of Emission Inventories for Carbon Monoxide and Precursors of Ozone. Volume II: Emission Inventory Requirements for Photochemical Air Quality Simulation Models. EPA-450/4-9-014. U.S. Environmental Protection Agency. Office of Air Quality Planning and Standards. Research Triangle Park. North Carolina. May 1991.

Emission Inventory Requirements for Carbon Monoxide State Implementation Plans. EPA-450/4-91-011. U.S. Environmental Protection Agency. Office of Air Quality Planning and Standards. Research Triangle Park. North Carolina. March 1991.

Example Documentation Report For 1990 Base Year Ozone and Carbon Monoxide State Implementation Plan Emission Inventories. EPA-450/4-92-007. U. S. Environmental Protection Agency. Office of Air Quality Plaining and Standards. Research Triangle Park. North Carolina. March 1992.

AIRS Facility Subsystem Source Classification Codes (SCCs) and Emission Factor Listing for Criteria Pollutants EPA-450/4-90-003. U.S. Environmental Protection Agency. Office of Air Quality Planning and Standards. Research Triangle Park. North Carolina. March 1990. Revised edition to be issued Summer 1992.

Guidance for the Preparation of Quality Assurance Plans O_3/CO SIP Emission Inventories. EPA-450/4-88-023. U.S. Environmental Protection Agency. Office of Air Quality Planning And Standards. Research Triangle Park. North Carolina. December 1988.

Quality' Review Guidelines For 1990 Base Year Emission Inventories. EPA-450/4-91-022. U.S. Environmental Protection Agency. Office of Air Quality Planning and Standards. Research Triangle Park. North Carolina. September 1991

SIP Air Emission Inventory Management System (SAMS) Version 4.1 and SAMS User's Guide. U. S. Environmental Protection Agency. Office of Air Quality Planning and Standards. Research Triangle Park. North Carolina. September 1991.

User's Guide to MOBILE4. 1 (Mobile Source Emission Factor Model). EPA-AA-TEB-91 -01. U.S. Environmental Protection Agency. Office of Mobile Sources. Ann Arbor. Michigan. July 1991.

Procedures for Estimating and Applying Rule Effectiveness in Post-1987 Base Year Emission Inventories for Ozone and Carbon Monoxide State Implementation Plans. U.S. Environmental Protection Agency. Office of Air Quality Planning and Standards. Research Triangle Park. North Carolina. June 1989.

Surface Impoundment Modeling System (SIMS) Version 2.0 User's Manual. EPA-450/4-90-019a. U.S. Environmental Protection Agency. Research Triangle Park. North Carolina. September 1990.

Background Document for Surface Impoundment Modeling System (SIMS) Version 2.0. EPA-450/4-90-019b. U.S. Environmental Protection Agency. Research Triangle Park. North Carolina. September 1990.

TABLE OF CONTENTS

	Page
1.0 INTRODUCTION	1
2.0 OVERVIEW OF THE MOBILE SOURCE CATEGORY	2
2.1 INDIVIDUAL MOBILE SOURCE CATEGORIES	2
2.1.1 Highway Vehicles	2
2.1.2 Nonroad Sources	3
2.1.3 Aircraft	3
2.1.4 Locomotives	4
3.0 EMISSIONS FROM HIGHWAY VEHICLES	5
3.1 GUIDANCE ON THE USE OF MOBILE4.1 VS MOBILE5 FOR THE 1990 BASE YEAR INVENTORY AND OTHER INVENTORIES	5
3.2 MOBILE SOURCE EMISSION ESTIMATION PROCESS	6
3.2.1 Overview of Factors Influencing Motor Vehicle Emission Inventories	6
3.2.1.1 Vehicle Fleet Activity	7
3.2.1.2 Emission Factors	7
3.2.1.3 Fleet Characteristics	7
3.2.1.4 Fuel Characteristics	7
3.2.1.5 Correction Factors	8
3.2.1.6 Control Programs	8
3.2.2 Overview of MOBILE4.1 Input Requirements	8
3.2.2.1 Fleet Characteristics	9
3.2.2.1.1 VMT Mix	9
3.2.2.1.2 Annual Mileage Accumulation Rates	9
3.2.2.1.3 Registration Distributions	10
3.2.2.2 Fuel Specifications	10
3.2.2.2.1 RVP	10
3.2.2.3 Correction Factors	10
3.2.2.3.1 Speed	10
3.2.2.3.2 Temperature	10
3.2.2.3.3 Operating Modes	11
3.2.2.3.4 Minor Correction Factors	11
3.2.2.4 Tampering and Misfueling	12
3.2.2.5 Control Programs	12
3.2.2.5.1 Refueling Emissions	12
3.2.2.5.2 Inspection and Maintenance Programs	12
3.2.2.5.3 Anti-Tampering Programs (ATPs)	12
3.3 GUIDANCE ON SELECTING MOBILE4.1 INPUTS	13
3.3.1 Emission Factors	13
3.3.1.1 Region	14
3.3.1.2 Calendar Year	14

TABLE OF CONTENTS

	Page
3.3.2 Fleet Characteristics	15
3.3.2.1 Vehicle Miles Traveled Mix by Vehicle Type	15
3.3.2.2 Annual Mileage Accumulation Rates and Registration Distributions by Vehicle Type and Age	16
3.3.2.3 Trip Length Distribution	18
3.3.2.4 Diesel Sales Fractions	20
3.3.3 RVP Determination	22
3.3.3.1 EPA-Provided 1990 RVP Estimates	26
3.3.3.2 "Period 1" RVP and "Period 2" RVP	26
3.3.3.3 Interpolation	27
3.3.3.4 Inputs for Future Year RVP	27
3.3.3.4.1 Future Summer RVP	27
3.3.3.4.2 Future Winter RVP	28
3.3.4 Oxygenated Fuels	29
3.3.5 Correction Factors	30
3.3.5.1 Speed	30
3.3.5.2 Temperature	34
3.3.5.3 Operating Modes	38
3.3.5.4 Additional Correction Factors for Light-Duty Gasoline-Fueled Vehicle Types	40
3.3.6 Control Programs	43
3.3.6.1 Refueling Emissions	43
3.3.6.2 Inspection and Maintenance Programs	45
3.3.6.2.1 I/M	47
3.3.6.2.2 Start Year	47
3.3.6.2.3 Stringency	47
3.3.6.2.4 First Model Year	47
3.3.6.2.5 Last Model Year	48
3.3.6.2.6 Waiver Rates	48
3.3.6.2.7 Compliance Rate	49
3.3.6.2.8 Inspection Frequency	50
3.3.6.2.9 Vehicle Classes	51
3.3.6.2.10 I/M Test Types	51
3.3.6.2.11 Alternate I/M Credits	53
3.3.6.2.12 Centralized Programs	53
3.3.6.2.13 Decentralized Programs (Manual)	53
3.3.6.2.14 Computerized Inspection	54
3.3.6.2.15 Tech I-II and Tech IV+	55
3.3.6.3 Anti-Tampering Programs	55
3.3.6.3.1 ATP	57
3.3.6.3.2 Tampering and Misfueling	57
3.3.6.3.3 Air Pump Inspection	57

TABLE OF CONTENTS

Page

3.3.6.3.4 Catalyst Inspection 57
3.3.6.3.5 Fuel Inlet Restrictor Inspection 58
3.3.6.3.6 Tailpipe Lead Detection Test 58
3.3.6.3.7 EGR Inspection 59
3.3.6.3.8 Evaporative Control System 59
3.3.6.3.9 PCV Inspection 60
3.3.6.3.10 Gas Cap Inspection 60
3.3.6.3.11 Tampering Rates 60
3.4 VEHICLE MILES TRAVELED 62
3.4.1 Highway Performance Monitoring System 62
3.4.1.1 Role of the HPMS in SIP Development 62
3.4.1.2 Overview of HPMS 63
3.4.1.3 Consistency Between HPMS and SIP VMT 65
3.4.1.3.1 Expansion Factors 65
3.4.1.3.1.1 Non-Attainment Area the Same As the Federal Aid Urbanized Area 65
3.4.1.3.1.2 Non-Attainment Area Inside of the Federal Aid Urbanized Area 66
3.4.1.3.1.3 Non-Attainment Area Outside of the Federal Aid Urbanized Area 66
3.4.1.3.1.4 Non-Attainment Area and Federal Aid Urbanized Area Crossover 67
3.4.1.3.2 Local Functional System 67
3.4.1.3.3 Seasonal Adjustment 68
3.4.1.3.4 Daily Adjustment 68
3.4.1.4 Allocating VMT to Time of Day 68
3.4.1.5 Allocating VMT to Functional Systems 69
3.4.1.6 Estimating VMT in Rural and Small Urban Areas 69
3.4.1.6.1 Apportionment of Statewide VMT-Recommended Method 72
3.4.1.6.2 Apportionment of Statewide VMT-Alternative Methods 74
3.4.1.6.2.1 Motor Vehicle Registrations 74
3.4.1.6.2.2 Population 74
3.4.1.6.2.3 Fuel Sales 75
3.4.2 Travel Demand Network Models 78
3.4.2.1 Role of Transportation Models in SIP Development 78
3.4.2.2 Background 78
3.4.2.3 Overview of Network Models 79
3.4.2.3.1 Level of Service 81
3.4.2.3.2 Physical Attributes 83
3.4.2.3.3 Locational Link Attributes 83
3.4.2.3.4 Trip Generation 86

TABLE OF CONTENTS

Page

3.4.2.3.5 Trip Distribution 86
3.4.2.3.6 Modal Split 86
3.4.2.3.7 Traffic Assignment 86
3.4.2.3.8 Feedback 87
3.4.2.4 Consistency Between Transportation Model VMT and HPMS 87
3.4.2.4.1 Non-Attainment Area the Same As the Network Model Area 88
3.4.2.4.2 Non-Attainment Area Inside of the Network Model Area 89
3.4.2.4.3 Non-Attainment Area Outside of the Network Model Area 89
3.4.2.4.4 Non-Attainment Area and Network Model Area Crossover 90
3.4.2.5 Local Functional System 90
3.4.2.6 Seasonal Adjustment 91
3.4.2.7 Daily Adjustment 91
3.4.2.8 Allocating VMT to Time of Day 91
3.4.2.9 Allocating VMT to Functional Systems 91
3.4.3 Exception to the Use of HPMS VMT 92
Appendix 3-A 94
4.0 EMISSIONS FROM NONROAD SOURCES 98
4.1 Introduction 98
4.2 Inventory Options Under This Guidance 99
4.2.1 Options for Areas With EPA Provided Inventories 99
4.2.2 Options For Areas With EPA Provided Inventories 101
4.2.3 Options For Areas Without EPA Provided Inventories 102
4.3 Explanation of EPA Provided Inventory 102
4.3.1 Derivation of AMS Inputs 103
4.3.2 AMS Inputs 105
4.4 General Methodology Used In Deriving Emission Inventories For 33 Areas 107
4.4.1 Explanation of Methodologies to Distribute Equipment Within Each Category Type at the County Level 108
4.4.2 Explanation of Methodologies For Distributing Equipment Within Each Category at the Sub-County Level 112
4.4.3 Seasonal Adjustment Methodology 113
4.5 New York Non-Attainment Area Example 115
Appendix 4-A 117
Appendix 4-B 124
Appendix 4-C 132
Appendix 4-D 135

TABLE OF CONTENTS

Page

5.0 EMISSIONS FROM AIRCRAFT 137
5.1 OVERVIEW OF THE INVENTORY METHODOLOGY 137
5.1.1 Factors Affecting Emissions 138
5.1.1.1 Aircraft Categorization 138
5.1.1.2 Pollutant Emissions 139
5.1.1.3 Aircraft Engines 140
5.1.1.4 Operating Modes 140
5.2 INVENTORY METHODOLOGY 144
5.2.1 Airport Selection 144
5.2.2 Mixing Height Determination 145
5.2.3 Activity and Emissions for Commercial Aircraft 149
5.2.4 Activity and Emissions for General Aviation and Air Taxi Aircraft 173
5.2.4.1 Aircraft-Specific Procedure 173
5.2.4.2 Alternative, Fleet-Average Procedure 176
5.2.5 Activity and Emissions for Military Aircraft 178
5.3 VARIATIONS TO THE INVENTORY CALCULATION PROCEDURE 190
5.3.1 Variability of Activity - Daily and Seasonal 190
5.3.2 Operational Activity that Affects Aircraft Emissions 191
5.3.2.1 Reduced Engine Taxiing 191
5.3.2.2 Derated Take-off 192
5.3.3 Particulate Emissions 192
5.4 OTHER EMISSION SOURCES 192
5.4.1 Auxiliary Power Units 192
5.4.2 Evaporative Emissions 197
5.5 EFFECT OF FUTURE CHANGES TO THE FLEET 197
5.6 CONVERTING FROM TOTAL HYDROCARBONS (THC) TO VOLATILE ORGANIC COMPOUNDS (VOC) 198
5.6.1 Commercial and Military Conversions 198
5.6.2 General Aviation and Air Taxi Conversions 199

6.0 EMISSIONS FROM LOCOMOTIVES 200
6.1 OVERVIEW OF RECOMMENDED INVENTORY METHODOLOGY 202
6.2 RECOMMENDED METHODS 202
6.2.1 Class I Line Haul Locomotives 202
6.2.1.1 Fuel Consumption 202
6.2.1.2 Emission Factors 204
6.2.2 Class II and III Line Haul Locomotives 205
6.2.2.1 Fuel Consumption 205
6.2.2.2 Emission Factors 206
6.2.3 Yard Operations 206
6.2.3.1 Number of Yard Locomotives 206
6.2.3.2 Emissions Per Yard Locomotive 206

TABLE OF CONTENTS

Page

6.3 TAILORING METHODS 208
6.3.1 Locomotive Roster Tailoring Method 208
6.3.1.1 Identify the locomotives in the area 208
6.3.1.2 Determine the engine type 209
6.3.1.3 Sum the total of the conversions 209
6.3.1.4 Calculate the new fleet average emission factor 210
6.3.1.5 Multiply the new emission factors by fuel consumption 210
6.3.2 Duty Cycle Tailoring Method 210
6.3.3 SO_2 Tailoring Method 212
6.4 ALTERNATIVE METHOD 213
6.5 RE-ENGINED LOCOMOTIVES 213
6.6 CONVERTING FROM TOTAL HYDROCARBONS (THC) TO VOLATILE ORGANIC COMPOUNDS (VOC) 213
Appendix 6-1 215
Appendix 6-2 216
Appendix 6-3 217
Appendix 6-4 219
Appendix 6-5 222
Appendix 6-6 223
Appendix 6-7 225
Appendix 6-8 227

1.0 INTRODUCTION

A fundamental requirement in the effort to control pollution in any form is to quantify the emissions being released. This is necessary to understand the relationships between emissions and the ambient concentrations that result, and to develop appropriate policies and methods to ensure that ambient pollutant concentrations remain within acceptable limits.

Specific air pollution requirements are set forth in Title 40, Code Of Federal Regulations, Part 51.321 (40 CFR 51), and in the Clean Air Act, as amended, for the development and maintenance of ongoing programs to inventory specific pollutant emissions. States are required by 40 CFR 51 to prepare and submit annual reports to the U.S. Environmental Protection Agency (EPA) regarding the emissions of particulate matter, sulfur oxides, carbon monoxide, nitrogen oxides, and volatile organics from point sources within their boundaries. The amendments to the Clean Air Act require the development of "...comprehensive, accurate, and current..." inventories from all sources of each pollutant for every non-attainment area, in conjunction with the preparation of revised State Implementation Plans (SIPs). EPA recognizes that a significant effort will continue to be needed to develop and maintain emission inventories to meet the requirements for both technical analysis and administrative reporting.

To assist the states in meeting the requirements for emission inventory development, a five volume series has been prepared that describes in detail many of the technical aspects of the inventory process. This document is the fourth volume in the series, and it focuses on mobile sources. Specifically, this document presents specific methods that can be used to identify sources, estimate emissions, and establish and maintain a useful, current mobile source emissions inventory. Special attention has been given to preparing the 1990 SIP inventories.

Following this introductory chapter, Chapter 2 gives an overview of the mobile source category. Chapters 3 through 6 present specific methods that should be used to derive emission estimates for each of the primary mobile source subcategories.

Chapter 1 - Introduction
Chapter 2 - Overview
Chapter 3 - Highway Vehicles
Chapter 4 - Nonroad Sources
Chapter 5 - Aircraft
Chapter 6 - Locomotives

2.0 OVERVIEW OF THE MOBILE SOURCE CATEGORY

An inventory of pollutant emission sources should classify sources into two major categories - point sources and area sources. The point source category is described in detail in Volume II of this series. The area source category is described in detail in Volume III of this series. Mobile sources are a subcategory within the area source category of pollutant emission sources. However, the procedures for preparing and maintaining an inventory of emissions from mobile sources are presented herein, as a separate document in this series, because the inventorying procedures are different from those for other area source subcategories and because the mobile source emissions inventory represents a major portion of the total emissions of volatile organics (VOC), nitrogen oxides (NOx), and carbon monoxide (CO).

The mobile sources for which inventory and emission calculation procedures are presented in this document are highway vehicles, nonroad mobile sources, aircraft, and locomotives. Recreational marine equipment and commercial marine vessels are discussed in the nonroad mobile source section. The procedures describe how to calculate tailpipe emissions and emissions from the fuel carried on the vehicle (evaporative VOC emissions) for these four mobile source categories. The emissions that result from tire wear and travel over roads or other surfaces should be calculated from the procedures in Volume III of this series and are specifically excluded from consideration in this document.

2.1 INDIVIDUAL MOBILE SOURCE CATEGORIES

2.1.1 Highway Vehicles

Highway vehicles include all vehicles registered to use the public roadways. The predominant emissions source in this category is the automobile, although trucks and buses are also significant sources of emissions.

The total highway vehicle population can be characterized by eight individual vehicle type categories:

- Light duty gasoline powered vehicles (LDGV);
- Light duty gasoline powered trucks, from 0 to 6000 lb. gross vehicle weight (LDGT1);
- Light duty gasoline powered trucks, from 6001 to 8500 lb. gross vehicle weight (LDGT2);
- Heavy duty gasoline powered vehicles (HDGV);
- Light duty diesel powered vehicles, from 0 to 6000 lb. gross vehicle weight (LDDV);
- Light duty diesel powered trucks (LDDT);
- Heavy duty diesel powered vehicles (HDDV);
- Motorcycles (MC).

Numerous characteristics for each vehicle type are necessary before emissions can be calculated. These characteristics include, among others, model year, the age distribution of vehicles within the class, annual mileage by vehicle age, and average speed. Chapter 3 of this document presents detailed procedures for identifying and using these and other key characteristics.

2.1.2 Nonroad Sources

This mobile source category includes a diverse set of source types. The movement of sources in this category occurs on surfaces other than the public highways. Nonroad vehicles can be classified into ten categories:

- Lawn and Garden Equipment,
- Industrial Equipment,
- Airport Service Equipment,
- Construction Equipment,
- Recreational Equipment,
- Agricultural Equipment,
- Recreational Marine Equipment,
- Logging Equipment,
- Light Commercial Equipment,
- Commercial Marine Vessels.

These categories are difficult to inventory, since few data are available to determine either their activity levels or operating characteristics. Chapter 4 of this document provides procedures for inventorying and estimating emissions from these categories.

2.1.3 Aircraft

Aircraft include all types of aircraft, whether civilian, commercial, or military. Emissions from idling, taxiing, and during landings and takeoffs are included. Landing and takeoff cycle (LTO) emissions are those that occur between ground level and an altitude of about 3000 feet. Aircraft emissions above 3000 feet need not be included in either the base year emission inventory or in the modeling inventory.

The larger civil and commercial airports with continuously manned control towers maintain records of LTO cycles by type of aircraft as part of their standard operating procedure. Smaller airports also maintain these records to the extent that their control towers are manned or landing fees are recorded. Difficulty may be encountered in obtaining data on military aircraft operations at military airports.

EPA has compiled a complete set of emission factors for different types of aircraft operating in the different modes (idle, taxi, LTO). Chapter 5 of this document provides instruction on how to calculate emissions from this mobile source category.

2.1.4 Locomotives

Locomotives include all fossil fuel fired locomotive engines operated on railways. The quantity of fuel used by locomotives and the size, in horsepower, of the locomotives are necessary to calculate emissions from this source. This information is discussed in Chapter 6.

3.0 EMISSIONS FROM HIGHWAY VEHICLES

In most urban areas, highway vehicles represent the largest single source of carbon monoxide (CO) emissions and contribute significantly to the area's production of volatile organic compounds (VOC), sulfur oxides (SO_x) and oxides of nitrogen (NO_x).

Emission estimates for highway vehicles are usually based on the combination of two fundamental measures of activity: travel and the average rate of pollutants emitted in the course of travel. Both measures reflect complex patterns of behavior.

The Environmental Protection Agency and the Department of Transportation Federal Highway Administration (FHWA) have developed a series of tools/models to estimate the rate of emissions produced by vehicles per mile of travel and the amount of travel itself. The knowledge base and disciplines required to understand and operate these models are distinct, as are their audiences. This distinction generally ensures that environmental analysts have little appreciation for the accuracy of the travel estimates produced by transportation analysts and vice versa.

The purpose of this chapter is to provide guidance for preparing the highway vehicle portion of mobile source emission inventories, particularly those associated with the development of State Implementation Plans (SIPs) for ozone (O_3) and CO. The accuracy of the inventory will be no better than the accuracy of the estimates of either the emission rates or vehicle miles traveled (VMT).

This chapter responds to concerns that little effort has been devoted to the development of accurate projections of travel within non-attainment areas, that projections of attainment dates have been based on dated information and that highway vehicles are responsible for a greater portion of the emissions inventory than recent estimates have suggested. Because of these concerns, the earlier guidance on the use of available travel estimates has been carefully reviewed and updated.

3.1 GUIDANCE ON THE USE OF MOBILE4.1 VS MOBILE5 FOR THE 1990 BASE YEAR INVENTORY AND OTHER INVENTORIES

At the time of this writing, MOBILE4.1 is EPA's current emission factor model. MOBILE5 will be available within months of the publication of this document. EPA will accept 1990 base year emission inventories prepared with either MOBILE4.1 or MOBILE5 emission factors. The November 15, 1992 submittal date for inventories will apply no matter which version of the model is used.

Since MOBILE5 will incorporate the new vehicle standards for VOC and NOx mandated by the Clean Air Act (CAA), estimates of those emissions for years after 1990 will be significantly different than those estimated by MOBILE4.1. Therefore, ozone non-attainment areas should submit <u>projections</u> using MOBILE5. However, the 1990 highway vehicle emission inventories should be recalculated as soon as possible after November 15, 1992 using MOBILE5 so that all required inventories are consistent. CO

non-attainment areas may use MOBILE4.1 for the November 15, 1992 projection submittal, and if they do, recalculation of the 1990 inventory is not necessary.

The SIP Attainment/Reasonable Further Progress Demonstration, including projection year inventories, should use MOBILE5 for ozone non-attainment areas.[1] In addition, if the base year inventory was originally developed using MOBILE4.1, it should be recalculated using MOBILE5 and resubmitted.[2]

For CO non-attainment areas, the base year and projection year inventories may be developed using either MOBILE4.1 or MOBILE5. Submissions after the November 15, 1992 submission should use MOBILE5. Such submissions may be voluntary or due to bump up or other provisions of the Clean Air Act.

The release of MOBILE5 will be accompanied by a supplement to this document explaining the differences between MOBILE4.1 and MOBILE5 and the additional inputs contained in MOBILE5.

3.2 MOBILE SOURCE EMISSION ESTIMATION PROCESS

3.2.1 Overview of Factors Influencing Motor Vehicle Emission Inventories

Many complex processes govern the formation of pollutants in motor vehicles. The EPA and the California Air Resources Board (CARB) maintain large data collection programs to quantify the rate at which pollutants are emitted by individual categories of motor vehicles. Both organizations have used this information to develop models that help analysts in estimating motor vehicle contributions to the local emissions inventory. These models, commonly known as emission factor models, are designed to account for the effect of numerous vehicle parameters on the volume of pollutants emitted. The current EPA model is called MOBILE4.1.

The primary components of an emission factor model include the base emission factors, characterization of the vehicle fleet, fuel characteristics, vehicle operating conditions and the effect of local ambient conditions, the effect of alternative I/M programs and the effect of tampering and misfueling. None of these factors is static: technology is continually evolving, leading to changing in-use emission performance. Changes in fuel prices and economic conditions lead to changes in vehicle sales and travel patterns. A substantial effort is required to accurately quantify these factors and to stay current with the influence of all of these factors on vehicular emission levels.

---

[1] The SIP Attainment/Reasonable Further Progress and projection year inventories are due on either November 15, 1993 or November 15, 1994, depending upon the non-attainment classification.

[2] EPA may set a date prior to November, 1993 for submission of draft projection and recalculated base year inventories, similar to the current requirement to submit the draft base year inventory no later than May, 1992.

3.2.1.1 Vehicle Fleet Activity

It is standard practice in preparing highway vehicle emission inventories to express vehicle activity in terms of vehicle miles traveled, and the emission factors in units of grams per mile of travel. Actually, vehicles also emit hydrocarbons while stationary. Estimates of emission-producing activities that do not involve travel are built into MOBILE4.1. These non-moving emissions are spread over estimated miles of travel by vehicles of a particular age and output as an equivalent per mile emission factor. Therefore, EPA will accept VMT as the measure of local vehicle activity for all inventories required under the Clean Air Act.[3]

VMT can be estimated in several possible ways. Direct observation via traffic counts (usually at a sample of roadway points with statistical expansion to represent the universe of all roadways in the area) and highway/transit network models are the more preferred approaches. EPA does not recommend reliance on fuel sales data, owner reports, or periodic odometer surveys as substitutes. The two recommended methods are discussed in Section 3.4.

3.2.1.2 Emission Factors

Emission rates are computed from test measurements of in-use vehicles at various odometer readings designed to capture two fundamental processes: the baseline emission rate and the deterioration that takes place as the vehicle ages. Linear regressions are performed on the data to quantify the level of pollutants emitted by each model year's vehicles. The results are commonly referred to as the intercept, or zero-mile (ZM), emission rate and the slope, or deterioration rate (DR), that occurs over each 10,000 mile interval.

3.2.1.3 Fleet Characteristics

The emission factors quantify the performance of individual model year vehicle fleets by vehicle type. The age distribution, the rate of mileage accumulation and the mix of travel experienced by each vehicular category can significantly alter the fleet average emission rate. While the emission factor models employ national average distributions for each of the factors, local input is allowed, often encouraged, and, for some inputs, required. Differences between local and national average distributions can alter the emissions contributions of the individual vehicle categories.

3.2.1.4 Fuel Characteristics

Emission test measurements are conducted on a standardized test fuel known as Indolene. The characteristics of this fuel are well defined and ensure that test results are repeatable. Since consumers cannot purchase Indolene at their local service stations and

---

[3] VMT must usually be disaggregated such that each subset of it can be reasonably represented by a single emission factor determined by one set of inputs of the types described below. EPA also accepts the trip-based activity methods described in this document.

differences between the volatility of local fuels and Indolene can influence the level of both evaporative and tailpipe pollutants, MOBILE4.1 requires local input of fuel volatility.

3.2.1.5 Correction Factors

To ensure the repeatability of measurements, standardized test conditions have been specified for each vehicle category. They include driving cycle, temperature, humidity, vehicle load, and the distribution of starting conditions. Since not all vehicle trips match these test conditions, a series of correction factors has been developed to allow the emission factor model to account for differences.

3.2.1.6 Control Programs

Emission factors are based on the performance of vehicles independent of any local control programs such as I/M, anti-tampering and Stage II refueling. Each of these programs is designed to reduce the level of pollutants emitted by vehicles operating under in-use conditions. Further, differences in program designs can have a significant impact on their effectiveness in reducing emissions. Therefore, it is important to specify correctly program parameters in order to estimate correctly their effect on vehicular emissions.

3.2.2 Overview of MOBILE4.1 Input Requirements

MOBILE4.1, EPA's emission factor model, computes separate emission estimates for eight vehicle categories:

- Light-duty gasoline-powered vehicles (LDGV), i.e., passenger cars;
- Light-duty diesel-powered vehicles (LDDV), i.e., diesel-powered passenger cars;
- Light-duty gasoline-powered trucks, type 1 (LDGT1), i.e., pickup trucks and vans that have a gross vehicle weight (GVW) of 0 - 6000 pounds;
- Light-duty gasoline-powered trucks, type 2 (LDGT2), i.e., pickup trucks, vans, and other small trucks that have a GVW of 6001 - 8500 pounds;
- Light-duty diesel-powered trucks, types 1 & 2 (LDDT);
- Heavy-duty gasoline-powered trucks (HDGV), i.e., all vehicles with a GVW greater than 8,500 pounds, powered by gasoline engines;
- Heavy-duty diesel-powered vehicles (HDDV), i.e., all diesel powered trucks with a GVW greater than 8,500 pounds; and
- Motorcycles (MC).

There are large differences in the emission characteristics of the vehicles represented by these categories; therefore, it is important that estimates of local or regional emission rates incorporate the distribution of VMT by vehicle type.

The emission factors produced by MOBILE4.1 are derived from measurements conducted under standardized test conditions. For light-duty vehicles, the standard set of test conditions is referred to as the Federal Test Procedure (FTP). It involves the simulated

operation of a vehicle over a specific driving cycle, the Urban Driving Cycle, under controlled operating and environmental conditions, during which emissions are measured in three sequences. The Urban Driving Cycle represents an average trip over an urban network that includes travel on local and arterial streets, major arterials, and expressways. The basic test conditions include:

- Ambient temperature range of 68°F to 86°F;
- Absolute humidity adjusted to 75 grains of water per pound of dry air;
- Average speed of 19.6 mph with 18 percent idle operation;
- Average percent of VMT in cold start operation of 20.6 percent;
- Average percent of VMT in hot start operation of 27.3 percent;
- Average percent of VMT in stabilized operation of 52.1 percent; and
- Average trip length of 7.5 miles.

In order to understand fully the derivation of emission factors and the influence of these conditions on emission levels, refer to Chapter 2 of the MOBILE4.1 User's Guide. A condensation of that material is included in Section 3.3 of this report.

MOBILE4.1 inputs can be altered to reflect city-specific conditions. A brief review of each of the primary options is presented below. They are not organized as they are in the MOBILE4.1 User's Guide, but rather in the order in which they will be discussed in more detail later in this chapter.

3.2.2.1 Fleet Characteristics

3.2.2.1.1 VMT Mix

The distribution of travel across the eight vehicle categories determines how the individual emission factors are weighted to produce a composite emission factor for the entire highway vehicle fleet. The LDGVs generally comprise over 50 percent of the travel recorded in any area of the country and, therefore, tend to be the dominant source of highway emissions. (HDDVs are an important source of NOx emissions.) MOBILE4.1 will calculate the VMT mix based on national data characterizing registration distributions, annual mileage accumulation rates by age, diesel sales fractions, and vehicle counts. These values may not, however, be representative of certain areas, such as western states where pickup trucks form a larger share of the vehicle population or rural areas where a broader distribution of vehicles exists.

3.2.2.1.2 Annual Mileage Accumulation Rates

The primary effect of the rate of mileage accumulation by age (in combination with registration data) is to determine the relative weighting of each model year's contribution to the average emission factor computed for each vehicle category. MOBILE4.1 provides the option of using a national average value or inputting data characterizing local conditions. The rate of mileage accumulation may be different from national average conditions in both rural and urban areas at either end of the economic spectrum.

3.2.2.1.3 Registration Distributions

These are used in concert with mileage accumulation rates to determine the relative weighting of each model year's contribution to the average emission factor for each vehicle category. MOBILE4.1 provides the option of using national average values or inputting data characterizing local registrations. The areas most likely to be distinct from national average values are rural areas, areas in which cars do not rust out and urban areas at either end of the economic spectrum.

3.2.2.2 Fuel Specifications

3.2.2.2.1 RVP

Evaporative and, to a lesser extent, exhaust emissions vary with fuel volatility. EPA's new vehicle certification program and much of its in-use vehicle testing program use gasoline with a fuel volatility (RVP) of 9.0 psi. In recent years much of the country has been supplied with gasoline of higher volatility. MOBILE4.1 adjusts estimated emission factors to account for the effects of volatility. No national average value for this variable is available in MOBILE4.1; one must supply this input.

3.2.2.3 Correction Factors

3.2.2.3.1 Speed

Emission factors are very sensitive to the average speed that is assumed. In general, emissions tend to increase as average speeds decrease from the 19.6 mph average FTP speed. MOBILE4.1 does not assume an average speed; rather it requires that an estimate of the speed experienced by vehicles operating in the area and roadway segment or collection of interest be specified. MOBILE4.1 adjusts the emission factors for speeds other than 19.6 mph through the use of speed correction factors. These multiplicative adjustments to the base emission factors tend to follow a non-linear relationship that increases the emission levels as speeds decline from 19.6 mph and increase beyond 48 mph.[4]

3.2.2.3.2 Temperature

Emissions from mobile sources are significantly influenced by the ambient temperatures under which they are operating. Temperature has an effect on both the exhaust and the evaporative emission levels. MOBILE4.1 deals with these effects separately. In general, exhaust emissions are at a minimum at the temperature specified for the FTP (75°F), with emissions increasing as temperature either increases or decreases from that value. No ambient temperature is assumed by MOBILE4.1. One must be provided as an input to the model.

---

[4] The speed correction factors in MOBILE5 may be significantly revised at speeds above 48 mph.

3.2.2.3.3 Operating Modes

Emission factors based on FTP measurements are collected for three separate segments, usually referred to as bags because the vehicle exhaust is collected in three separate teflon bags, each with differing emissions performance. The three bags correspond to the following modes of operation: cold start, hot stabilized, and hot start. Bag 1, the cold start mode, reflects conditions experienced at the beginning of a trip when the engine and the emission control system begin operation at ambient temperature and are not performing at optimum levels (i.e., the catalyst is cold and has not reached the "light off" temperature needed to efficiently control emissions coming from the engine) until part way through the trip.[5] The hot start mode, Bag 3, reflects the condition of an engine that has been restarted after being turned off for 10 minutes and, therefore, has not cooled to ambient conditions. Under this circumstance the engine and catalyst are warm and, although not at peak operating efficiency when started, still have significantly improved emissions performance relative to the cold start mode. Bag 2, the hot stabilized mode, reflects the condition of the engine when the vehicle has been in continuous operation long enough for all systems to have attained stable operating temperatures. The proportion of VMT accumulated in cold and hot start modes must be specified based on the conditions in the area to be modeled. Specifications must be made for catalyst and non-catalyst vehicles separately.

3.2.2.3.4 Minor Correction Factors

This category has been added to cover the effects of four special correction factors that are available:

- Air conditioning;
- Extra vehicle loading;
- Trailer towing;
- NO_x humidity.

These factors are designed to account for the effect of unusual vehicle operating conditions relative to those experienced in the FTP. Generally, it is difficult to quantify the extent of these vehicle operating parameters, and their effect on emission factors tends to be small. Therefore, EPA recommends that few resources be expended to develop the inputs needed. The effect of the NO_x humidity correction factor is also slight, and, unless NO_x is of particular concern, little effort should be devoted to its use.

[5] "Bag 1" is usually a mix of cold and warmed operation, since, except under very cold ambient conditions, the 505 seconds of driving represented by this bag constitutes a longer period than is needed for the engine and catalyst to get warm.

3.2.2.4 Tampering and Misfueling

The basic emission factors in MOBILE4.1 receive an adjustment to account for estimates of vehicle tampering rates as a function of accumulated mileage for each gasoline-fueled vehicle category and eight categories of tampering (e.g., air pump disablement, misfueling, etc.). These rates are combined with offsets (the increase in emissions that results from the given type of tampering) and added to the non-tampered emission factors. Options are available to input local tampering rates. The use of local information must be supported by an approved survey. If locally developed information is not available, a national average rate will be used by MOBILE4.1.

3.2.2.5 Control Programs

3.2.2.5.1 Refueling Emissions

The refueling of gasoline-fueled vehicles results in the displacement of fuel vapor from the vehicle fuel tank to the atmosphere.

There are two basic approaches to the control of vehicle refueling emissions, generally referred to as "Stage II" (at the pump) and "onboard" (in the vehicle) vapor recovery systems. MOBILE4.1 can model refueling emissions with no controls as well as with either or both of the control options.

3.2.2.5.2 Inspection and Maintenance Programs

Many areas of the country have implemented I/M programs as a means of further reducing mobile source air pollution. MOBILE4.1 can model the impact of an operating I/M program on the calculated emission factors. There is no average national I/M program; local inputs must be supplied. Details are given in Section 3.3.6.2 of this document and in the MOBILE4.1 User's Guide.

3.2.2.5.3 Anti-Tampering Programs (ATPs)

Some areas of the country have implemented these programs to reduce the frequency and related emission impacts of emission control system tampering. MOBILE4.1 allows the effects of such a program on the calculated emission factors to be estimated. Due to the wide variation in the characteristics of ATPs and the lack of a national program, there is no national average estimate of ATP parameters. Details of the required inputs are given in Section 3.3.6.3 of this document and in the MOBILE4.1 User's Guide.

3.3 GUIDANCE ON SELECTING MOBILE4.1 INPUTS[6]

MOBILE4.1 may be used to develop highway vehicle emission factors and emission inventories for use in the State Implementation Plan process.[7] The proper version of MOBILE4.1 to use in preparing SIP inventories is the one dated November 4, 1991. Older versions should be discarded or erased.[8]

This section contains EPA's recommendations and suggestions with regard to determining appropriate MOBILE4.1 inputs. However, for many inputs there is no single correct answer or recommendation that is best for every local area. For those using MOBILE4.1 for SIP-related modeling purposes, it is important that the appropriate EPA Regional Office personnel be kept involved in decisions concerning questionable or controversial assumptions in the MOBILE4.1 modeling and inventory development process.

3.3.1 Emission Factors

Description

The basic emission rates (BERs) used in MOBILE4.1 are expressed as linear equations and consist of a zero-mile level and one or two deterioration rates.[9] There are different BER equations in MOBILE4.1 for each vehicle type/pollutant/model year group, with the model year groups defined on the basis of applicable emission standards and emission control technologies used.

Although MOBILE4.1 provides the capability to change the BER equations, the BERs in MOBILE4.1 accurately reflect all promulgated emission standards as of late 1990, and no locality-specific changes to these equations are warranted for use in developing emission factors or inventories for calendar years through 1992. Specifically, no need exists for modification of the BERs in MOBILE4.1 in order to develop emission factors for the development of base year 1990 emission inventories by the states in response to the requirements of the Clean Air Act.

---

[6] This section is in part a condensation of material that appears in the User's Guide to MOBILE4.1, Chapter 2. It is not a substitute for the User's Guide. You are advised to obtain and thoroughly read the User's Guide before running the model. It is available from the National Technical Information Service (NTIS), 5285 Port Royal Road, Springfield, VA 22161 (703/487-4650). The NTIS accession number is PB91-228759.

[7] Highway vehicle emission factors and emission inventories for non-attainment areas in California may be developed using the EMFAC model.

[8] While future year inventories are discussed in this document, MOBILE4.1 should not be used for projecting VOC or NOx emissions beyond January 1, 1994, since it does not reflect new standards that begin to have an effect after that date. MOBILE4.1 may be used for CO inventory projections. MOBILE5 will be released in final form in August, 1992 and will allow VOC and NOx projections.

[9] A deterioration rate is the gram per mile increase in emissions per 10,000 miles accumulated mileage.

Guidance

No need exists for modifying the BERs in MOBILE4.1 in order to develop VOC or NOx emission factors for any calendar year through 1992 inclusive,[10] or to develop CO emission factors for any calendar year through 2020.

3.3.1.1 Region

Description

MOBILE4.1 provides two options for region: low-altitude and high-altitude. Low-altitude emission factors are based on conditions representative of approximately 500 feet above mean sea level (+500 ft MSL), and high-altitude factors are based on conditions representative of approximately +5500 ft MSL. MOBILE4.1, like MOBILE4, does not calculate California emission factors. There have been no revisions to this variable or how it is input to the model since the release of MOBILE4.

Guidance

For the majority of MOBILE4.1 applications, low-altitude is the appropriate choice. For those areas designated as high-altitude by EPA for mobile source regulatory purposes, generally those counties that lie "substantially" above +4000 ft MSL, high-altitude should be selected.[11]

3.3.1.2 Calendar Year

Description

The value used for calendar year in MOBILE4.1 defines the year (as of January 1) for which emission factors are to be calculated. It is frequently referred to as the calendar year of evaluation. MOBILE4.1 has the ability to model emission factors for the years 1960 through 2020 inclusive. There have been no revisions to this variable or how it is input to the model since the release of MOBILE4.

---

[10] EPA expects to update the model to version 5.0 to incorporate all of the requirements of the November 1990 CAA in time for states to project mobile source HC and NOx emissions and demonstrate attainment of the National Ambient Air Quality Standard for ozone.

[11] A list of those counties EPA has designated as high-altitude appears in §86.088-30, paragraphs (a)(5)(ii) and (iv). Code of Federal Regulations.

Guidance

The 1990 base year SIP inventories represent emissions during a typical day in the pollutant season, most commonly summer for ozone and winter for CO. Thus, base year VOC inventories should be based on interpolation of the calendar year 1990 and 1991 MOBILE4.1 emission factors.[12, 13, 14]

CO SIP inventories should be based on emission factors from January 1990 regardless of the three-month period for which CO is being modeled.

Similar instructions apply to the development of Reasonable Further Progress (RFP) inventories. For modeling of specific episode days, the best results will be obtained by interpolating exactly to the day being modeled. In attainment demonstrations, it is acceptable to account for fleet turnover through November 15th of the year being modeled.

3.3.2 Fleet Characteristics

3.3.2.1 Vehicle Miles Traveled Mix by Vehicle Type

Description

The vehicle miles traveled mix specifies the fraction of total highway VMT that is accumulated by each of the eight regulated vehicle types. The VMT mix is used in MOBILE4.1 only to calculate the composite (all vehicle) emission factor for a given scenario on the basis of the model's eight vehicle class-specific emission factors.

---

[12] For example, if most exceedances of the ozone National Ambient Air Quality Ozone Standard occur during the months of June, July, and August, then the appropriate base year emission factor is the average of the January 1, 1990 and January 1, 1991 emission factors.

[13] Since the accuracy gained by interpolating for typical summer days other than July 1st is minimal and since the AIRS/AMS mainframe version of MOBILE4.1 for VOC and NOx inventories automatically generates July 1 emission factors, EPA will accept 1990 VOC and NOx emissions estimates based on July 1st emission factors. Areas preparing draft 1990 inventories may select an input of January 1, 1990 for their ozone season inventory and note this prominently in the documentation. However, the inventory must be switched to a July 1, 1990 basis for the final submission to EPA.

[14] January 1st and July 1st evaluations only differ in that the July 1st vehicle fleet is composed of more of the latest model year vehicles and fewer of the 25th and older model year vehicles, as a result of new car sales and scrappage of older vehicles between January 1 and June 30. The January 1 vs. July 1 choice is independent of all temperature and other vehicle operating conditions, which should represent the appropriate pollutant season.

MOBILE4.1 calculates a typical urban area VMT mix based on national data characterizing model-year-specific registration distributions and annual mileage accumulation rates by age for each vehicle and fuel type,[15] the fraction of travel by each vehicle type that occurs in typical urban areas, and the total number of vehicles of each vehicle type.

For SIP-related highway vehicle emission inventory development in moderate and above non-attainment areas, EPA expects states to develop and use their own specific estimates of VMT by vehicle type and highway functional system.[16] VMT fractions based on local estimates of VMT by vehicle type should be used as input to MOBILE4.1.[17]

Each VMT mix supplied as input must consist of a set of eight fractional values, representing the fraction of total mobile source VMT accumulated by each of the eight vehicle types. All values must be between zero and one, and the eight values must sum to 1.0. There have been no revisions to how alternate VMT mixes are supplied to the program as input data since the release of MOBILE4.

Guidance

Techniques for calculating estimated VMT by vehicle type (and thus, total VMT and the VMT mix fractions) from available data sources are described in Chapter 6 of the report, Techniques for Estimating MOBILE2 Variables.[18] Metropolitan Planning Organizations (MPOs) and state Departments of Transportation (DOTs) should also be consulted. Information from these agencies can be used to determine the proportion of passenger vehicles and light duty trucks relative to heavy duty trucks by time of day and facility class. These two groups of vehicles can then be allocated into the eight MOBILE4.1 vehicle classes using the national default mix within each group provided by MOBILE4.1.

3.3.2.2 Annual Mileage Accumulation Rates and Registration Distributions by Vehicle Type and Age

Description

MOBILE4.1's emission factor calculations rely in part on travel fractions for vehicles of each given age within a vehicle type, which in turn are based on estimates of the average annual mileage accumulation by age (first year to 25th-and-greater years of operation) for

---

[15] Total HDDV registrations and annual mileage accumulations are also distributed within the model by truck weight class.

[16] Highway functional systems are commonly designated as the interstate system, other freeways and expressways, other principal arterials, minor arterials, and collectors.

[17] Ozone and carbon monoxide non-attainment areas classified as marginal, submarginal, or transitional may use the MOBILE4.1 default VMT mix if no local estimate is readily available.

[18] "Techniques for Estimating MOBILE2 Variables" and "Additional Techniques for Estimating MOBILE2 Variables," Energy and Environmental Analysis, Inc. for EPA (EPA Contract Number 68-03-2888).

each of the eight vehicle types, and the registration distributions by age (age 0-1 to age 24 and 25+) for each vehicle type, except motorcycles, for which annual mileage accumulation rates and registration distributions are only provided for the first to 12th-and-later years of operation (ages 0-1 to 11 and 12+). For all vehicles except motorcycles, this represents an increase in detail from the 20 years of operation used in MOBILE4.[19]

To use locality-specific annual mileage accumulation rates by age, a total of 200 input values is required: the estimated annual mileage accumulated by vehicles of each of the eight types for each of 25 ages.

To use locality-specific registration distributions by age, a total of 200 input values is also required. For each vehicle type, a set of 25 values is required to represent the fraction of all vehicles of the given type that are of a given age.

If both annual mileage accumulation rates by age and registration distributions by age are supplied, the annual mileage accumulation rate corresponding to any vehicle type/age combination accounting for a non-zero fraction of registrations must be positive. That is, if vehicles of a certain type and age are registered, then they are assumed to be driven.[20]

If locality-specific mileage accumulation rates and/or registration distributions by age are not used, the information in MOBILE4.1 is used for all calendar years evaluated.

Guidance

Mileage Accumulation

EPA recommends the use of the national annual mileage accumulation rates by age that are included in MOBILE4.1. Most local sources of data on mileage accumulation rates by age are subject to sampling bias or data entry errors, and the use of such data should be approached with caution. States that wish to use alternate mileage accumulation rates in their development of highway vehicle emission inventories in response to the requirements of the new CAA should obtain prior approval from their EPA Regional Office before using such rates in their emission factor modeling.[21]

---

[19] MOBILE4.0 modeled vehicles from age 0 through age 19 with the 20th year representing all vehicles 20 years and older.

[20] MOBILE4.1 will issue an error warning if vehicles of a certain type and age are registered but do not accumulate mileage. A warning will also be issued if there are no vehicles of a certain type and age yet the mileage accumulation distribution includes a positive value for that category.

[21] If local annual mileage accumulation rates are used, they normally should not change from one evaluation year to the next.

Registration Distributions

EPA recommends and encourages the use of actual locality-specific 1990 registration distributions by age to develop base year SIP emission inventories.[22, 23] Local registration distributions are particularly appropriate for those inventory areas where there are significant differences from the national average. The exception to the use of local data would be in those areas that have relatively few local HDDV registrations, but that experience significant interstate trucking activity. Such areas may want to retain and use the MOBILE4.1 national registration distributions.

EPA will issue at a later date additional guidance on how 1990 registration distributions by age can be adjusted to reflect future years. This guidance will provide a mathematical routine that preserves the average age of the fleet in 1990, while retaining the general shape of the local distribution for 1990 and earlier model years.[24, 25]

Methods for estimating the annual mileage accumulation rates by age and the registration distributions by vehicle type and age are presented in Chapters 2 and 3, respectively, of the report Techniques for Estimating MOBILE2 Variables.[26]

3.3.2.3 Trip Length Distribution

Description

Running loss emissions are a form of evaporative volatile organic compound (VOC) emissions that occur while the vehicle is being operated. Running loss emissions are different from "traditional" evaporative emissions that occur after the vehicle has been driven (hot soak evaporative emissions) and while it is parked during periods of rising ambient temperatures (diurnal evaporative emissions). MOBILE4 was the first version of the emission factor model to account for these emissions. In MOBILE4.1 estimates of running loss emissions have been extensively revised.

---

[22] Marginal, sub-marginal, and transitional non-attainment areas may use the MOBILE4.1 distributions for all vehicle types, if local distributions are not available.

[23] Registration distributions by age may be developed from data available through state motor vehicle registration records, either directly or commercially through R.L. Polk Company.

[24] Effectively, the routine will apply a scrappage curve to the existing 1990 registration distribution. The result will be that the pattern of high and low vehicle sales will propagate down the registration distribution as vehicles age with successive evaluation years.

[25] EPA will not accept a locally developed registration distribution that implies that the average age of the vehicle fleet is becoming younger in the future than is reflected in the registration distribution used for the base year unless the state provides adequate justification for the new distribution .

[26] "Techniques for Estimating MOBILE2 Variables" and "Additional Techniques for Estimating MOBILE2 Variables." Energy and Environmental Analysis, Inc. for EPA (EPA Contract Number 68-03-2888).

EPA has determined through its running loss emission test programs that the level of running loss emissions depends on several variables: average vehicle speed, ambient temperature, fuel volatility, and the length of the trip.[27] Test data show that for any given set of conditions (average speed, ambient temperature, and fuel volatility), running loss emissions are zero to negligible at first, but increase significantly as trip duration lengthens.

In MOBILE4, running loss emissions were modeled as direct functions of the input temperature and volatility; average speed and trip duration were held constant within the model to values representative of typical urban area traffic patterns. In MOBILE4.1 running loss emissions are modeled as a direct function of the input temperature, fuel volatility, average speed and trip duration.

The input data record of the VMT-weighted trip duration distribution must list the fraction of all travel (VMT) being accumulated over the time period that the emission factors apply:

- Under 10 minutes
- 11 to 20 minutes
- 21 to 30 minutes
- 31 to 40 minutes
- 41 to 50 minutes
- 51 minutes and longer

Note that the first value should be the fraction of VMT that occurs in trips that end within 10 minutes of their start, not the fraction of VMT that occurs within 10 minutes of trip start for longer trips. The other values are defined similarly. Note also that the running loss emission factor that is calculated by MOBILE4.1 is a fleet and area-wide average that applies to all of the VMT in all of the trips for each vehicle type. Any geographic disaggregation by VMT density will be only approximate. Situations more heavily affected by emission rates at the end of trips, such as a central business district in the morning rush hour, are more complex to model. EPA staff should be consulted in such cases.

If this option of specifying trip length distributions is not selected, then MOBILE4.1 will calculate the running loss emission factors on the basis of the typical trip duration included in the model.

Guidance

Since reliable local data on the distribution of trip durations is often unavailable, EPA will accept the use of the model's typical distributions for the estimation of running loss VOC emission factors for the 1990 emission inventory. Where the transportation modeling process

[27] "Length of trip" as used here refers to the duration of the trip (how long, in minutes, the vehicle has been traveling), not on the distance traveled in the trip (how far the vehicle has been driven).

can produce reliable inputs for trip duration, use of such inputs will produce a more accurate estimate of the benefits attributable to SIP measures which shorten average trip lengths without eliminating entire trips.[28]

Most SIP inventories will be constructed by adding together emission estimates for several functional classifications of roadway. EPA recommends that one area-wide trip length distribution be used for all roadway classifications, due to the complexity of trying to develop separate distributions.

3.3.2.4 Diesel Sales Fractions

Description

Sales of diesel powered light-duty vehicles and trucks underwent a surge in the late 1970s and early 1980s, peaking at 5.9% of LDV sales in the 1981 model year, and at 9.3% of LDT sales in the 1982 model year. Since then diesel sales have fallen precipitously, to virtually zero for LDVs[29] and to about 0.2% of LDTs since the 1988 model year. While MOBILE4 contained forecasts of increasing diesel sales for both LDVs and LDTs through the early 1990s, MOBILE4.1 assumes a more limited and slower increase from the current, very low diesel sales rates. MOBILE4.1 assumes that future LDV diesel sales never exceed 0.3% and that future LDT sales never exceed 2.15%.

MOBILE4.1, like earlier versions of the model, uses a single set of registration distributions by age and annual mileage accumulation rates to describe all LDVs, and another set to describe all LDTs. This is due in part to the fact that it is nearly impossible to develop such information for gas and diesel LDVs and LDTs separately, and in part since there is little evidence to suggest that typical use patterns and mileage accumulation rates are different for gas and diesel LDVs and for gas and diesel LDTs.

Diesel sales fractions represent the share of all sales[30] in a given model year that are diesel-fueled vehicles. The use of model-year-specific diesel sales fractions allows MOBILE4.1 to internally split the LDVs and LDTs into gas and diesel sub-categories, which have distinctly different emission rates.

If vehicle registration data that distinguish between gas and diesel LDVs and gas and diesel LDTs exist, it is possible to input local diesel sales fractions by model year. These data must be supplied for every calendar year of evaluation; since they apply to vehicles of

---

[28] The use of trip length distributions other than those included in MOBILE4.1 should be adequately documented in the SIP.

[29] LDV diesel sales accounted for less than 0.05% of total LDV sales in the 1988-1990 model years.

[30] Diesel sale fractions apply only to LDVs and LDTs. Heavy duty gasoline and diesel vehicles are treated separately within the MOBILE models.

ages 1, 2, 3, ..., to 25-and-older, different sets of fractions are required for each calendar year. Including this information will create a more accurate highway mobile source emission inventory estimate.

For each scenario, the fractions of LDV and of LDT sales that were diesel for each model year from the calendar year of evaluation back to 25 model years ago must be entered as a model input. For example, if the calendar year of evaluation is 1990, then diesel sales fractions for model year 1990, 1989, 1988, ..., 1967, and 1966-and-older LDVs and LDTs must be provided. If two different scenarios are being run, both for calendar year 1990 but with other differences, then the same set of diesel fractions would have to be supplied again as part of the second scenario. If a scenario with calendar year 1995 was also being run, then the diesel sales fractions would represent model year 1995, 1994, ..., 1972, and 1971-and-older vehicles. The same values would be used for the model years in common to the two sets of sales fractions, but the five oldest model year values would not be used in the second sequence to make room for the five most recent model years sales fractions.

The 50 diesel sales fractions, 25 each for LDVs and LDTs, must be specified as fractions. For example, if in a given area the 1990 model year had diesel sales of 1.1% of LDVs and 1.8% of LDTs, the diesel sales fractions are 0.011 and 0.018 respectively. The values are supplied in pairs: The first two values on the first record are the diesel sales fractions for one year old LDVs and LDTs;[31] the second two values are the sales fractions for two year old LDVs and LDTs, and so on, with the last two values on the third record being the sales fractions for LDVs and LDTs 25 years and older.

Guidance

This option has been provided in MOBILE4.1 for two reasons. First, some users performing highway vehicle emission factor modeling may have access to vehicle registration data, or data from other sources, enabling them to characterize diesel sales of LDVs and LDTs in the area being modeled. Particularly if these sales fractions differ significantly from those included in MOBILE4.1, it will enhance the accuracy of the emission factors and inventory to use those sales fractions as model input. Second, as can be seen by the sharp rise and equally sharp fall of diesel sales in the late 1970s and early 1980s, it is extremely difficult to forecast diesel sales fractions for future model years. This provision will allow modelers to account for future increases in diesel sales, if such increases occur.[32]

---

[31] A vehicle is assumed to be one year old if the model year of that vehicle is the same as the evaluation year. Thus, a 1990 model year vehicle is assumed to be one year old in 1990. Similarly, a 1989 model year vehicle is assumed to be two years old in 1990.

[32] EPA does not envision any circumstances in which a state or locality should substitute its own projection of future diesel sales for that built into MOBILE4.1.

3.3.3 RVP Determination

Description

The basic emission rates that underlie the emission factor calculations are developed from vehicles tested at FTP conditions, including a fuel volatility of 9 psi Reid Vapor Pressure (RVP). For other fuel volatility levels, MOBILE4.1 adjusts the emission factors for exhaust and evaporative emissions as well as for running loss, resting loss, and refueling loss emissions.

Vehicle emission rates increase as the volatility of the fuel increases, for temperatures between 45°F and 75°F and for RVP values between 9.0 and 11.7 psi. This effect is most pronounced at higher RVP levels and at higher ambient temperatures. Since there is a significant interaction effect between RVP and temperature, it is important that RVP and temperature inputs to MOBILE4.1 be consistent. That is, RVP and temperature should be chosen in such a way that they represent the same time period.[33] In general, use July 1990 RVP levels to estimate VOC and CO emissions during the ozone non-attainment season . Use January 1990 RVP levels to estimate CO emissions during the CO non-attainment season.

Guidance

Gasoline survey data should be used to determine historical RVP, if quality-assured survey data are available. The survey samples should be drawn at the pump, not "upstream" of the pump at a refinery or fuel distribution terminal.[34, 35, 36]

---

[33] High RVP fuel is used in the winter months to facilitate vehicle starting. If the same high RVP fuel were used in the summer, a vehicle could experience vapor lock and stall.

[34] EPA will also accept the use of RVP determined from either of two regularly published gasoline volatility surveys, one performed by oil companies and compiled by the National Institute for Petroleum and Energy Research (NIPER) and the other sponsored by the Motor Vehicle Manufacturers' Association (MVMA) and conducted by the Southwest Research Institute (SwRI). Since the NIPER survey is not city-specific, the MVMA survey is the preferred choice.

[35] A third survey is sponsored by a consortium of oil companies, the American Petroleum Institute (API), and is also conducted by Southwest Research Institute. This survey includes more cities and sampling months, but the data from it are proprietary.

[36] A final possible source of RVP data is the sampling done by some states to enforce their state RVP limits. However, before using this approach, it should be discussed with EPA to determine if RVP data collected for enforcement purposes are suitable for determining average RVP for inventory purposes.

Procedure for Determining RVP Using the MVMA Survey

Obtain the appropriate edition of the MVMA National Gasoline Survey, published semi-annually[37] by the Motor Vehicle Manufacturers' Association. Ordering and price information is available from:

Motor Vehicle Manufacturers' Association
300 New Center Building
Detroit, MI 48202
Phone (313) 872-4311

Use the summer MVMA survey to estimate VOC and CO emissions during the ozone non-attainment season. Use the winter MVMA survey to estimate CO emissions during the CO non-attainment season.

If the average RVP for a specific city is desired and that city is included in the MVMA survey, use the RVP for that city.[38]

Find the average RVP value(s) for the city or cities selected from the summary table that appears near the end of the MVMA survey. The average RVP for regular unleaded gasoline is provided for all cities; the average RVP for premium and/or mid-grade unleaded and/or regular leaded gasoline is also provided for many cities. Ignore RVP values for any ethanol blends that may also be listed.[39]

Calculate the overall average RVP from the averages supplied for different grades of gasoline as follows:

---

[37] The data reflected in MVMA National Gasoline Survey are generally collected as of January 15th and July 15th.

[38] If no city from the inventory area is included in the MVMA survey, use the RVP for a city that is both geographically close to the city with the largest population within the inventory area and that was subject to the same EPA, state, or ASTM volatility limit at the time. If fuel distribution patterns are known, give preference to a survey city with the same distribution system.

If the RVP for outlying areas of a state is desired (for example, to complete the inventory for the fringes of an Airshed modeling domain) and a city within that state is included in the MVMA survey, use the RVP for that city. If two or more cities in that state are included in the MVMA survey, average the RVPs from those cities. If no city within the state is included in the MVMA survey, use the RVP for a city that is both geographically close to the state and that was subject to the same EPA, state, or ASTM volatility limit at the time. If fuel distribution patterns are known, give preference to a survey city with the same distribution system.

[39] As the use (and market share) of regular leaded fuel continues to decline, survey values for mid-grade unleaded are replacing those for regular leaded.

- If only the average RVP for regular unleaded gasoline is provided, use that value;

- If the average RVP for regular unleaded and one of the other fuel grades (premium unleaded, mid-grade unleaded, or regular leaded) is provided, weight the values using the local sales mix, if known, or at 75 percent regular unleaded and 25 percent of the other grade for which the RVP is provided, according to equation 3-1.

Average RVP = 0.75 • (average RVP of regular unleaded) +
0.25 • (average RVP of premium unleaded or mid-grade unleaded or regular leaded)

(3-1)

- If the average RVP is provided for three fuel grades, weight the values, using the local sales mix, if known, or at 50 percent regular unleaded, 25 percent premium unleaded, and 25 percent mid-grade unleaded or regular leaded, according to equation 3-2.

Average RVP = 0.50 • (average RVP of regular unleaded) +
0.25 • (average RVP of premium unleaded) +
0.25 • (average RVP of mid-grade unleaded or regular leaded)

(3-2)

If the average RVP is provided for all four fuel grades, weight the values using the local sales mix, if known, or at 50 percent regular unleaded, 20 percent premium unleaded, 20 percent mid-grade unleaded, and 10 percent regular leaded, according to equation 3-3.

Average RVP = 0.50 • (average RVP of regular unleaded) +
0.20 • (average RVP of premium unleaded) +
0.20 • (average RVP of mid-grade unleaded) +
0.10 • (average RVP of regular leaded)

(3-3)

The RVP thus calculated is used as the value of historical RVP in MOBILE4.1.

Procedure for Determination of RVP Using the NIPER Survey

Obtain the appropriate edition of the report Motor Gasolines, published semi-annually by NIPER. Samples for the summer survey are taken in June, July, and August. Samples for the winter survey are taken in December, January, and February.

The cost per report is $60, and it is available from:

Cheryl L. Dickson
National Institute for Petroleum and Energy Research
P. O. Box 2128
Bartlesville, OK 74005
Phone (918) 336-2400

Use the summer NIPER survey to estimate VOC and CO emissions during the ozone non-attainment season. Use the winter NIPER survey to estimate CO emissions during the CO non-attainment season.

The NIPER survey divides the country into seventeen districts, which are described in a table and illustrated on a map of the U.S. Use the district in which the inventory area is located. If the RVP for an entire state is desired and that state lies entirely within one district, use that district. If the state lies within two or more districts, average the RVPs from the districts within which the state lies.

Table 4 of the NIPER survey presents the average RVP of three grades of gasoline for each district: regular unleaded, regular leaded, and premium unleaded.[40]

Determine the overall average RVP of gasoline in a district by weighting these three values by the local sales mix, or, in the absence of local data, by an assumed sales mix of 50 percent regular unleaded, 25 percent premium unleaded and 25 percent regular leaded according to equation 3-4.

$$\begin{aligned}\text{Average RVP} = \; & 0.50 \bullet (\text{average RVP of regular unleaded}) + \\ & 0.25 \bullet (\text{average RVP of premium unleaded}) + \\ & 0.25 \bullet (\text{average RVP of regular leaded})\end{aligned} \tag{3-4}$$

The calculated RVP (or the average of the calculated RVPs, if the area for which the RVP is being determined resides within two or more districts) is then used as the value of historical RVP in MOBILE4.1.

Procedure for Determining RVP from Applicable RVP Limit

For an area without its own survey data and for which it is not possible to use a city or district for which survey data exist, RVP can be determined from the applicable RVP limit[41] adjusted by either a non-compliance margin or a compliance safety margin. Where ASTM

[40] Ignore RVP values for any ethanol blends that may be listed.

[41] Historically, fuel volatility was subject to voluntary limits according to ASTM Standard D439, "Standard Specification for Automotive Gasoline." More recently, fuel volatility has been subject to federal and/or state regulatory requirements.

limits were the applicable limit, average RVP often exceeded the ASTM limit (non- compliance margin) by an amount that varied with the year and the ASTM limit itself. On the other hand, gasoline regulated by EPA or state RVP limits usually has had an average RVP below the EPA or state ceiling.

To estimate RVP using the "limit" approach, apply the historical margin to the applicable limit according to equation 3-5.

$$\text{RVP} = \text{Applicable Limit} + \text{Margin} \qquad (3\text{-}5)$$

where

Applicable Limit = Federal or state regulatory limit, or, if none applies, ASTM standard for state and month for which an inventory is being estimated;

Margin = Non-Compliance Margin, if average RVP is greater than the applicable limit, or Compliance Safety Margin, if average RVP is less than the applicable limit.[42]

3.3.3.1 EPA-Provided 1990 RVP Estimates

For states that do not wish to apply one of the above methods themselves, EPA will post the 1990 RVPs recommended for use in modeling mobile source HC, CO, and NOx emissions on a typical summer day and the RVPs recommended for use in modeling mobile source CO emissions on a typical winter day on the Chief Bulletin Board System maintained by the Office of Air Quality Planning and Standards.

3.3.3.2 "Period 1" RVP and "Period 2" RVP[43]

MOBILE4.1 requires two RVP inputs, one for "period 1" and one for "period 2". The purpose of having two RVP inputs is to allow a step change in fuel volatility as of a specific calendar year.[44]

---

[42] The non-compliance margin is always positive; the compliance safety margin is always negative.

[43] "Period 1" RVP was called base or pre-control RVP in MOBILE4; "period 2" RVP was called in-use RVP in MOBILE4.

[44] MOBILE4.1 assumes this change to occur as of January 1 of the specified calendar year.

The value to be used for the "period 1" RVP is the average in-use RVP of gasoline in either the time before a volatility control program took effect or the years preceding a change in the controlled RVP level such as will take effect for most areas in 1992 when EPA's Phase I volatility control limits are superseded by the Phase II volatility control limits.[45] Period 1 RVP can be between 7.0 psi and 15.2 psi inclusive. "Period 2" RVP can be between 6.5 and 15.2 psi inclusive. The earliest allowed "period 2" start year is 1989.

There have been no revisions in the input of these two variables since the release of MOBILE4; only the names of these variables have been changed.

3.3.3.3 Interpolation

If emission factors are being calculated on a month-by-month basis, or if the consecutive three-month period with the highest frequency of NAAQS exceedance days occurring in the inventory area is some period other than June, July, and August for ozone modeling or November, December, and January for carbon monoxide modeling, the RVP appropriate to each of the specific months being modeled should be used. The July RVP value may be used for the entire period of the EPA RVP control program (May through September). For periods other than the period of EPA's control program, it is not correct to average RVP values from different months or seasons together, and it may be incorrect to use RVP from a time period other than that used to determine the temperatures input to MOBILE4.1.[46, 47, 48]

3.3.3.4 Inputs for Future Year RVP

3.3.3.4.1 Future Summer RVP

All parts of the United States will be subject to more stringent EPA summer RVP limits beginning in 1992, with the highest limit being 9 psi. The 1992 summer survey data may not be available in time to prepare draft or final inventories for 1996 and beyond. Also,

---

[45] To model the effects of the Federal volatility control program promulgated by EPA, in which volatility is limited in the summer months (May - September), see the relevant Federal Register notices (54 FR 11868, March 22, 1989; 55 FR 23658, June 11, 1990), or contact an EPA Regional Office to determine the applicable RVP limits for a specific State and month. The interim (Phase I) controls were in effect during 1989, 1990, and 1991, and the final (Phase II) controls took effect during 1992.

[46] The 1990 base year SIP inventories represent emissions during a typical day in the pollutant season, most commonly summer for ozone and winter for CO. The procedure for choosing typical day temperatures is described in section 3.3.5.2.

[47] For attainment demonstrations, states should use temperature and RVP values that reflect the conditions of the specific episodes being modeled.

[48] MOBILE4.1 does not model effects of RVP on emissions at temperatures of less than 45^0 F (7^0 C), nor does it model effects of RVP greater than an in-tank (weathered) level of 11.7 psi. Under summer temperature conditions an in-tank RVP of 11.7 psi corresponds to a dispensed fuel RVP of approximately 12.5 psi.

since 1992 is the first year of the "Phase II" volatility regulation, it may not be representative of long-term RVP levels. ASTM Class A and B areas will have a limit of 7.8 psi. To forecast future RVP, each area should determine its compliance safety margin in 1990 and/or 1991 relative to the 1990 EPA or state limit (ranging from 9.0 to 10.5). This margin should be subtracted from the future EPA or state limit, if that limit is 9.0. Areas without 1990 or 1991 survey data should subtract a default compliance safety margin of 0.3 psi. Areas with a 1990/91 limit of 10.5 psi and a safety margin significantly greater than 0.3 (which may have been the result of distribution of fuel intended to comply with a 9.0 limit in nearby areas, or which may be the result of other unique circumstances) should consult with EPA. It may be appropriate to use the 0.3 psi default, rather than the 1990/91 compliance safety margin for future years. Areas with a 9.0 limit in 1990/91 which also observed a safety margin significantly in excess of 0.3 psi should also consult with EPA as to the representativeness of the surveys involved.

Areas with a future summer RVP limit of 7.8 should, in general, not assume a safety margin, since RVP reductions below 7.8 psi are more costly than those below 9.0 psi, and loss of RVP between refinery and pump will be lower. However, if an area subject to the 7.8 psi limit in 1992 determines that a safety margin does exist in 1992 based on quality assured survey data, it may request that EPA review 1992 summer MVMA and/or API survey data from several cities to support its claim.

3.3.3.4.2 Future Winter RVP

There are no plans for EPA to establish winter RVP limits. If there are no state standards for future winter RVP or if they are the same as the state limit in 1990/91, the 1990/91 winter RVP input should be used for future years.

If a state is tightening its winter RVP limit from a limit actively enforced in 1990/91, the 1990/91 RVP compliance safety margin should be applied to the future limit. If no margin was applied in the 1990/91 inventory, none should be applied for the future year.

If a state is establishing a winter RVP limit where no limit or only an ASTM limit (not backed by state law including active enforcement) applied in 1990/91, the safety margin relative to the new limit should be the limit calculated from the 1990/91 (or more recent) summer survey.[49]

[49] Alternatively, the default margin of 0.3 psi may be assumed.

3.3.4 Oxygenated Fuels

Description

MOBILE4.1 can model the effects of two types of oxygenated fuels, gasoline/alcohol blends and gasoline/ether blends, on exhaust carbon monoxide (CO) emissions[50] provided that the following information is input:

- Ether blend market share (as a fraction);
- Average oxygen content of ether blend fuels (percent weight, expressed as a fraction);
- Alcohol blend market share (as a fraction);
- Average oxygen content of alcohol blend fuels (percent weight, expressed as a fraction);
- RVP waiver. (If oxygenated fuels must meet the same RVP limits as gasoline, this indicator is set to 1; if such fuels have been granted a 1.0 psi waiver, this indicator is set to 2.[51])

Guidance

Areas that are known to have significant market penetration[52, 53] of ether blends and/or alcohol blends should characterize the relative market shares and oxygen content of these fuel blends and account for them in their mobile source emission inventory.

EPA should be contacted for assistance in modeling the effects of oxygenated fuels if any of the following situations apply:

---

[50] Reductions in exhaust CO emissions are estimated for gasoline-fueled vehicle types (LDGV, LDGT1, LDGT2, HDGV, and MC). No effects on exhaust VOC or NOx emission factors or on any of the evaporative components of VOC emissions are currently modeled with the exception that, if the oxygenated fuels have a higher volatility than base gasoline in an area, exhaust and evaporative emissions will be increased to reflect the increased volatility of the oxygenated fuels. MOBILE5 will contain adjustments for exhaust HC.

[51] Gasoline/ether blends are assumed to have the same RVP as gasoline, indicated by the regular RVP value input.

[52] If, together, ethanol blends account for less than 2% of total gasoline sales within an inventory area, and if there is no mandatory or locally endorsed voluntary program for ether blends, oxygenated fuels need not be explicitly modeled for the 1990 base year inventory. Market shares for ethanol blends are readily available by state.

[53] There have been no recent significant sales of other oxygenated blend types (e.g., gasoline/methanol).

- the fuels available in an area include blends containing both ether(s) and alcohol(s) in the same fuel;
- an RVP waiver greater than 1.0 psi is applicable to oxygenated fuels in an area;
- no RVP waiver is in effect, but the volatility of base gasoline is currently below the regulated limit (in this situation, the practical effect may be same as if a waiver were in effect);
- if two or more types of alcohol blends are marketed under different RVP waiver treatment (for example, gasoline/methanol blends might not be given the same waiver as gasoline/ethanol blends).

3.3.5 Correction Factors

3.3.5.1 Speed

Description

There is considerable variation in vehicle emission factors as average vehicle speed changes.[54] In general, however, exhaust emissions are at a minimum at about 48 mph.[55] All emission rates (VOC, CO, NOx) display very high emissions at very low speeds, with emissions decreasing (sharply at first and then more slowly) as average speed increases, until minimum emissions are reached at around 48 mph. Above 48 mph, further increases in speed result in increased emissions.

MOBILE4.1 will calculate emission factors for average speeds of 2.5 to 65.0 mph, in increments of 0.1 mph.[56] One average speed may be used for all vehicles, or a different average speed may be used for each vehicle type.

Guidance

Selection of vehicle speeds is a difficult and complex process. Although it is appropriate for some purposes to use an average speed for all vehicle trips and vehicle types within urban areas as a whole, such an approach is not suitable for SIP inventory preparation. Instead, VMT should be left disaggregated into subsets that have roughly equal speed, with separate VOC, CO, and NOx emission factors for each subset.[57] At a minimum, speeds should be estimated separately by roadway functional class.

---

[54] The speed correction factors in MOBILE4.1 are substantially revised from those in MOBILE4.

[55] The average speed of the Highway Fuel Economy (HFET) test cycle is approximately 48 mph.

[56] The maximum average vehicle speed allowed in MOBILE4.0 was 55 mph.

[57] Since emissions are a non-linear function of speed, with significant curvature at low and high speeds, total daily area-wide emissions are to some degree incorrectly estimated if VMT "events" occurring at significantly different speeds are averaged together.

Travel Demand Network Approach

The recommended approach to estimating speeds is to post-process the output from a local travel demand network model.[58, 59] Two documents that provide guidance on speed estimation for areas using network models are: Highway Vehicle Speed Estimation Procedures for Use in Emissions Inventories and A Study of Highway Vehicle Emission Inventory Procedures in Selected Urban Areas.[60]

The primary purpose of speed within a transportation planning model is to allocate travel across the network. It is used primarily as a measure of impedance to travel rather than as a prediction of accurate travel times.

The report, Highway Vehicle Speed Estimation Procedures for Use in Emissions Inventories, focuses on speed estimation methods that are extensions of traffic assignment procedures. The basic method presented takes the link-specific traffic estimates provided as an output by a UTPS-type highway assignment model and calculates speeds based on the estimated highway volume-to-capacity ratios and a set of speed formulas that are more specific to different road types than the formula built into most assignment models.[61] As such, this method is not as simple as using the direct traffic assignment output without modification.[62]

A second approach to estimating speeds using travel demand network models is to use the output from traffic assignment directly.[63] If the network model assigns traffic to links on the basis

---

[58] Travel demand models that do not meet the performance and validation requirements for use in forecasting VMT growth may nevertheless be suitable for deriving speed estimates. However, reasonable efforts and success in validating the model are still required.

[59] Once link-by-link speeds are determined from speed formulas, the results may be aggregated into functional classes.

[60] Both documents were prepared for EPA by Cambridge Systematics, Inc. Much of the information contained in the remainder of this section was taken directly from these documents.

[61] In most metropolitan areas, transportation planners calibrate their highway assignment models to replicate observed volume levels, treating highway speeds only as tools to obtain good volume estimates rather than as critical outputs in their own right. In many cities, assignment-predicted speeds are too high to match actual conditions; in some cities, they are too low.

[62] For those urban areas that can demonstrate that their assignment-predicted link speeds closely match observed speed data and/or speeds estimated using the Federal Highway Administration's Highway Capacity Manual, the assignment-predicted link speeds speeds may be used directly in vehicle emissions inventories.

[63] If the year for which the inventory is being calculated is not the same as one of the years for which the network model as been run, speeds may be interpolated between chronologically adjacent network model runs.

of a capacity restraint algorithm, then the associated link speeds are likely to be more accurate than if another type of assignment methodology is used.[64, 65] However, the unique manner in which the traffic assignment algorithm manipulates speed for a particular link does not necessarily provide an accurate estimate of speed for that link but rather provides a value that optimizes the traffic assignment over the entire congested network.

Highway Performance Monitoring System (HPMS) Roadway Classification Approach

Post-processing with better speed formulas is often combined with a direct link to the emission factor model, and link speeds are either used directly as MOBILE inputs[66] or grouped into ranges based on the speed at which VMT occurs on each link.[67]

One way to further reduce the number of MOBILE4.1 runs is to use FHWA's Highway Performance Monitoring System (HPMS) roadway classification scheme to group portions of VMT by the functional classification of the roadways on which they occur. This results in 12 subsets of VMT.[68] Within each subset, speed is weighted by VMT to calculate an average speed and emission factor.

This disaggregation of VMT by functional system avoids most of the undesirable VMT averaging that might otherwise cause errors in the emission inventory. Further accuracy improvements can be obtained by dividing the day into separate time periods so that congested VMT and free-flowing VMT are not mixed. While two periods are the minimum split to get more homogeneity in vehicle speeds, more than two periods are possible. Each functional system can, for example, be characterized by four average speeds during distinct periods of the day: a morning peak period, a mid-day non-peak period, an afternoon peak period, and a late evening/night non-peak period.[69, 70] Under this approach separate MOBILE4.1 emission factors are calculated for each

---

[64] The capacity restraint method is a common type of traffic assignment algorithm. It is based on the inverse relationship between speed and congestion. It attempts to model congested speeds during peak conditions for all facility types. As congestion increases, vehicle operating speeds decrease. The capacity restraint methodology is used as the default formula in many urban areas' traffic assignment models.

[65] A potential problem with the use of any single function is that it may not account well for the variations in traffic operating conditions across all types of links, especially on very congested links. A single formula may be unable to accurately estimate speed for facility types having very different operating characteristics. A more appropriate procedure would include separate equations for estimating speed for each facility class for each condition, i.e., peak versus off-peak travel.

[66] In this case, emission factors are developed for each highway link and multiplied by the VMT on each link to calculate link-specific vehicle emissions.

[67] Typically, a range would be one or two mph. If this approach is used, emission factors are calculated for the midpoint of each speed range and multiplied by the associated VMT.

[68] FHWA designates roadway segments separately within urban and rural areas into six functional classes each.

[69] AIRS/AMS is set up according to this approach, with up to 12 roadway classifications and one to four time periods within a day.

[70] The start and end times of periods should be locally determined to reasonably separate higher from lower speed traffic periods.

period based on the speeds and temperatures prevailing during the period.[71] This approach has most of the advantages of link-specific hour-by-hour modeling, but requires fewer MOBILE4.1 runs.[72]

Estimating emissions for separate time periods within the day also requires that particular attention be paid to the treatment of the temperature inputs to MOBILE4.1. The sum of the emissions within the four periods should be logically consistent (except for the effect of the speeds) with that which would result from using the 24-hour approach. In order to achieve this consistency, the 24-hour minimum and maximum temperatures should be used to determine diurnal evaporative emissions for each of the time period-specific MOBILE4.1 runs.

Ambient temperature, on the other hand, should be set to the VMT-weighted average temperature of the period in question.[73] For example, if the night period extends from 7 pm to 6 am, the temperature for each of the hours occurring during the night should be weighted by the percent of night period VMT in each hour.[74, 75]

Highway Performance System National Estimates[76]

If no network model is available, and in marginal and sub-marginal non-attainment areas, the national speed estimates listed in Table 3-1 may be used. Individual areas may be able to obtain comparable but locally specific speed estimates through their state DOT or FHWA division office. These speeds are calculated from HPMS traffic counts and site-specific speed formulas and are not actual speed observations.

---

[71] Inputs other than speed and temperature might also differ by functional system and time of day. The hot/cold mix of vehicle operation is one example of such an input.

[72] This approach is most worthwhile when a significant portion of the highway network gets much more congested during part of the day, with considerable VMT in both the congested and non-congested periods.

[73] The TEMFLG control flag should be set to accomplish this. See the User's Guide to MOBILE4.1, section 2.1.14.

[74] The recommended method of apportioning daily VMT to specific hours is to use the state's continuous monitors available within the FAUA. If no such monitors exist within the inventory area, then the state may rely on other continuous monitors located in areas similar in geographic, land use and demographic characteristics, or on those areas' final Airshed Emission Preprocessor profiles.

[75] Hour-by-hour temperatures should be determined from the 10-worst-days method used to determine the minimum and maximum temperatures for inventory purposes. See section 3.3.5.2.

[76] SOURCE: Federal Highway Administration, Highway Performance Monitoring System, Impact Analysis for 1989 Base Year.

Table 3-1

Geographic Area	Roadway Functional Classification	Autos, Vans Pickups	All Trucks
Rural	Interstates	57.3	43.6
	Other principal arterials	45.4	36.0
	Minor arterials	39.9	33.3
	Major collectors	35.1	29.8
	Minor collectors	30.5	24.4
Urban	Interstates	46.3	39.0
	Other freeways and expressways	43.3	36.5
	Other principal arterials	18.9	16.0
	Minor arterials	19.6	19.6
	Collectors	19.6	16.4

Consistency Over Time

Speed estimates for years other than 1990 must be logically related to the 1990 methodology and estimates, with no arbitrary or unsupported assumptions of speed changes.

3.3.5.2 Temperature

Description

The basic emission rates that underlie the emission factor calculations are developed from emission data from vehicles tested at FTP conditions, including an ambient temperature of 75^{0}F (24^{0}C). MOBILE4.1 uses temperature correction factors to correct the emission factors for other temperatures.

MOBILE4.1 provides temperature correction factors for temperatures in the range of 0^{0}F (-18^{0}C) to 110^{0}F (43^{0}C). If a temperature below 0^{0}F is entered, a warning message is issued, and 0^{0}F is used in the calculations. Similarly, if a temperature above 110^{0}F is entered, a warning message is also issued, and 110^{0}F is used in the calculations.

The temperature used to adjust the exhaust emission factors for all three pollutants, the hot soak component of evaporative emissions, refueling emissions, and resting loss and running loss emissions can be calculated on the basis of the input minimum and maximum daily temperatures.[77] Alternatively, the model can use a single temperature that represents ambient conditions at a particular time.

[77] The maximum temperature must not be less than the minimum temperature.

However, even if a single temperature is used as the basis of the temperature correction factors for all exhaust emissions, hot soak evaporative emissions, refueling emissions, and resting loss and running loss emissions,[78] minimum and maximum daily temperatures will still be used to calculate the diurnal component of evaporative emissions.

Minimum and Maximum Daily Temperatures

Minimum and maximum daily temperatures are used directly in MOBILE4.1 to calculate the diurnal portion of evaporative VOC emissions[79] and to estimate the temperature of dispensed fuel for use in the calculating refueling emissions. Unless overridden,[80] the temperatures used in calculating temperature corrections for exhaust VOC, CO, and NOx emissions, the hot soak portion of evaporative emissions, and resting loss and running loss VOC emissions are also calculated by MOBILE4.1 based on the minimum and maximum temperatures entered as input to the model.

Since the basic exhaust emission rates for VOC, CO, and NOx are based on the standard test temperature of 75^{0}F (24^{0}C), MOBILE4.1 also adjusts these rates for other temperatures. Using the minimum and maximum daily temperatures and a representative profile of temperature versus time of day, MOBILE4.1 first calculates a temperature for each pollutant representing average emissions over the course of the day and then adjusts the exhaust emission factors for temperature effects accordingly.[81]

Hot soak emissions at FTP conditions are based on a temperature of 82^{0}F (28^{0}C). Again using the minimum and maximum temperatures, MOBILE4.1 calculates a temperature by which to adjust hot soak emissions.

---

[78] Logically, the single temperature used to represent a typical day must be between a typical day's minimum and maximum temperatures.

[79] Diurnal emissions are most frequently measured for a temperature range of 68-86^{0}F (20-30^{0}C). However, MOBILE4.1 adjusts diurnal emission rates for the minimum and maximum temperatures provided as input based on special EPA testing over additional temperature ranges.

[80] A single ambient temperature can also be used to determine the temperature corrections for exhaust VOC, CO, and NOx emissions, hot soak evaporative emissions, dispensed fuel temperature in the refueling emissions calculations, and resting loss and running loss emissions, through the choice of a value for the control flag TEMFLG (see the "User's Guide to MOBILE4.1," section 2.1.14). This approach is not recommended unless modeling a short time period, such as an hour. Refueling emissions should always be modeled using the "full day" approach; hourly temperatures should not be used. Diurnal emissions can only be modeled directly in MOBILE4.1 using the "full day" approach, since the algorithm used is inaccurate over the very small temperature rises (1 to 5^{0}F) typical of a single hour.

[81] The algorithm used in MOBILE4.1 to determine temperatures for correcting emissions on the basis of the input minimum and maximum temperatures takes into account both the typical 24-hour diurnal temperature profile for a day having the specified minimum and maximum, and the typical distribution of travel over the course of 24 hours. Thus, the emission factors calculated in this way are appropriately weighted for trips, vehicle miles traveled, and emissions at different temperatures and result in factors that can be multiplied by total daily VMT when total daily emissions are the desired result.

Resting loss and running loss VOC emissions are also dependent on temperature. As in the cases of exhaust and hot soak emissions, MOBILE4.1 calculates appropriate average temperatures for estimating resting loss and running loss emissions, weighted to account for differing emission levels at different temperatures in the range of the minimum and maximum daily temperatures and differing travel fractions over the course of a day. Restrictions on these temperatures are: the maximum temperature must be greater than or equal to the minimum temperature, and the ambient temperature should be between the minimum and maximum (minimum $\leq$ ambient $\leq$ maximum).

There have been no revisions to this variable's use or input data format requirements since the release of MOBILE4.

Guidance

EPA recommends that the minimum and maximum daily temperatures be used to determine the temperatures for corrections to the emission factors, if daily average, rather than hour-by-hour, emissions are to be estimated.[82, 83]

Minimum and maximum temperatures are normally calculated from the most recent three-year period for which validated ozone and/or CO monitoring data exists at the time the emission inventory is due. For 1990 inventories, the period to be used for temperature determination should be 1988-1990.[84]

---

[82] If hourly diurnal emissions are required for photochemical or other models, an acceptable approach is to first calculate the daily diurnal emissions, then allocate to specific hours in proportion to the temperature rise per hour. For example, if during the modeling day the temperature increases from 60-84^{0}F within the 7 a.m. to 5 p.m. ten-hour period, and if during the 1-2 p.m hour temperature increases from 76-80^{0}F, then, assuming the total diurnal emission factor is 3 g/vehicle, the emission factor for the 1-2 p.m. hour is 0.5 g/vehicle. The diurnal emission factor for hours other than 5 a.m. to 3 p.m. is zero. Other reasonable methods may also be acceptable. States wishing to use another method should consult with EPA staff.

Hourly Emission Factor = Hour-Specific Temperature Increase/(Maximum Daily Temperature - Minimum Daily Temperature) ● Total Diurnal Emission Factor

(3-6)

[83] For CO modeling inventories, the recommended temperature is the average of the 8-hour high concentration period temperatures rather than the minimum and maximum temperatures used to calculate a typical winter day inventory:

$$\sum_{\text{Days}=1}^{10} \sum_{\text{Hours}=1}^{8} \text{Ambient Temperature}_{(\text{Hours})}$$

[84] The temperatures used in the 1990 inventory must also be used for all projection inventories.

Procedure

Determine the consecutive three-month period with the highest frequency of NAAQS exceedance days occurring in the inventory area.[85] The same consecutive three-month period applies for each year, with a total of nine months used to determine temperature. If the months containing the highest frequency of exceedances are not consecutive, or if two or more sets of consecutive months have the same frequency, use the months of June, July, and August for ozone modeling and the months of November, December, and January for carbon monoxide modeling.

Next, list the 10 highest concentrations[86] that occurred in the inventory area during those nine months and the dates of those concentrations.[87]

The ten highest ozone concentrations for each site in a county and the dates on which they occurred are contained in the Aerometric Information Retrieval System (AIRS) AMP440/Maximum Values Report. Eight-hour average CO concentrations and the dates on which they occurred can be found in the AIRS AMP350 raw data report. The AMP355/Standard Report contains the CO values that exceed the NAAQS. These reports are available from EPA's National Air Data Branch. Be sure to specify the year(s) and counties of interest and indicate that the request is for preparation of a SIP emission inventory to avoid being charged the normal processing fee. To obtain copies of these reports, contact Tom Link, U.S. EPA Office of Air Quality Planning and Standards, at (919) 541-5456.

Determine the maximum and minimum temperatures for each of the 10 days for the area being inventoried. This information is contained in the Local Climatological Data Monthly Summary for the inventory area and is available from:

National Climatic Data Center
Federal Building
Asheville, NC 28801-2696
Telephone: (704) 259-0682

Maximum and minimum daily temperatures are located in columns 2 and 3, respectively, on page 1 of the Summary.

---

[85] Consider the three-year period as a whole when making this determination.

[86] The 10 highest concentrations need not all be exceedences.

[87] There are four exceptions to selecting the 10 highest concentrations: 1) More than 10 concentrations may be needed to identify 10 unique dates. 2) If the 10th ranked concentration level occurs on more than one day, all of those days should be included in the temperature calculation. 3) If only two years of validated monitoring data exist for the entire MSA monitoring network, use the seven highest concentrations. 4) If only one year of data exists for the entire MSA monitoring network, use the four highest values.

If there is more than one meteorological station within the non-attainment area, use the station that best represents the conditions of most mobile source emissions within the inventory area.

The temperatures recommended for use in modeling mobile source HC, CO, and NOx emissions on a typical summer day and the temperatures recommended for use in modeling mobile source CO emissions on a typical winter day will be posted on the Chief Bulletin Board System maintained by the Office of Air Quality Planning and Standards.

3.3.5.3 Operating Modes

Description

One important determinant of emissions performance is the mode of vehicle operation. EPA's emission factors are based on testing over the FTP cycle, which is divided into three driving segments (referred to as "bags"), each with differing associated emissions performance:

Bag	Operating Mode
1	Cold start - first 505 seconds of a cold-start trip (or less, if the trip ends before 505 seconds);
2	Stabilized - all operation beyond 505 seconds of a trip;
3	Hot start - first 505 seconds of a hot-start trip (or less, if the trip ends before 505 seconds).

Emission data from each of these modes reflect the fact that emissions generally are highest when a vehicle is first started, i.e., is operating in the cold-start mode. At that time, the vehicle, engine, and emission control equipment (particularly the catalytic converter and oxygen sensor) are all at ambient temperature and, therefore, are not performing at optimum levels.

The hot start mode represents the case of a vehicle that was operating, was turned off, and then was restarted. In this case the vehicle was not turned off for sufficient time to have cooled completely to ambient temperatures. Since the vehicle is partially warmed up, emissions during a hot start are generally lower than during a cold start. However, since the vehicle is not yet completely warmed up, emissions are generally higher than when the vehicle is completely warmed up and operating in what is known as stabilized mode. During stabilized mode the vehicle has been in continuous operation long enough for all emission control systems to have attained relatively stable, fully "warmed-up" operating temperatures.

MOBILE4.1 uses three inputs to indicate vehicle operating mode.[88] These inputs represent VMT; that is, the percentage of VMT (not the percentage of vehicles) accumulated by non-catalyst vehicles in cold-start mode (PCCN), by catalyst-equipped vehicles in hot-start mode (PCHC), and by catalyst-equipped vehicles in cold-start mode (PCCC). The three specified values must all be expressed as percentages (not as fractions). Each value must lie between 0.0% and 100.0%, and the sum of PCHC + PCCC must not exceed 100%. There have been no revisions in the definitions or in the use or format requirements of these variables since the release of MOBILE4.

Guidance

Historically EPA has defined cold starts to be any start that occurs at least four hours after the end of the preceding trip for non-catalyst vehicles and at least one hour after the end of the preceding trip for catalyst-equipped vehicles. Hot starts are those starts that occur less than four hours after the end of the preceding trip for non-catalyst vehicles and less than one hour after the end of the preceding trip for catalyst-equipped vehicles. The shorter time interval associated with the cold/hot start definition for catalyst-equipped vehicles reflects the fact that catalytic converters do not operate at intended efficiency until they are fully warmed up.[89]

In the absence of supporting data for values other than those listed above, EPA believes that the values reflecting FTP conditions are appropriate. This is particularly true when the emission factors being modeled are individually or collectively intended to represent a broad geographic area (Metropolitan Statistical Area, entire state) and/or a wide time period (days, months). When the modeling is intended to represent highly localized conditions (specific highway links) or very limited periods of time (single hours), it may be possible to develop more representative values for these variables.[90] Areas known to have average trip

---

[88] The values corresponding to the FTP cycle are: PCCN 20.6 %
PCHC 27.3 %
PCCC 20.6 %

[89] Catalysts begin to operate at full efficiency once they reach about 600°F (316°C). Since non-catalyst vehicles do not depend on attainment of such high temperatures for stabilization of emissions performance, they can remain partially warmed up for up to four hours.

[90] Some transportation emissions modeling approaches are based on the concepts of trip-start emissions and running emissions, rather than the method described above. In this alternative approach, trip-start emissions are assumed to be instantaneous and are calculated as the difference between MOBILE4.1 total "start" emissions and total "stabilized" emissions. Total start emissions per trip are the product of the 100% cold- (or hot-) start emission factor in grams per mile and the 3.59-mile distance attributed to the first 505 seconds of the FTP driving cycle. Total stabilized emissions are the product of the 100% stabilized emission factor in grams per mile and the same 3.59-mile distance and same speed as that used to estimate start emissions. Start emissions are calculated as the grams per trip event times trip productions, and are typically located at the centroids.

Total stabilized emissions are the product of the sum of the MOBILE4.1 stabilized exhaust and running loss emission factors in grams per mile and the total distance traveled during the course of the trip.

Trip end emissions are simply the "hot soak" emissions expressed in grams per trip event times trip attractions. Trip end emissions are also typically located at centroids.

Daily diurnal emissions are calculated as the emissions in grams per vehicle times vehicles present and must

lengths significantly shorter or longer than 7.5 miles may also merit the use of alternate values.[91]

Thus for SIP-related modeling, EPA will accept the use of the FTP operating mode values except for small-scale scenarios where their use would clearly be inappropriate. EPA will not accept SIP-related modeling that includes different operating mode fractions for the base and projection years without a clear demonstration that such a shift is warranted.

3.3.5.4 Additional Correction Factors for Light-Duty Gasoline-Fueled Vehicle Types

Description

MOBILE4.1 can provide four additional corrections to the exhaust emission factors for LDGVs, LDGT1s, and LDGT2s. These corrections are used to represent unique conditions not typically assumed in MOBILE4.1 runs, and include the emissions effect of air conditioning (A/C) usage, extra loading, and trailer towing. There is also a humidity correction factor, which applies only to exhaust NOx emissions.[92]

If these corrections are to be applied, either six or ten inputs will be required. If six values are required, they are an A/C usage fraction (for all LDGVs and LDGTs), three extra load usage fractions (for LDGVs, LDGT1s, LDGT2s), a trailer towing fraction (for all LDGVs and LDGTs), and a humidity level (for all LDGVs and LDGTs plus motorcycles). If ten values are required, they are an A/C usage fraction (for all LDGVs and LDGTs), three

---

also be assigned to specific hours and locations. Methods for this assignment vary.

If the transportation model produces reliable estimates for the relevant trip parameters, this alternative method is believed to be a more accurate way to locate mobile source emissions within the inventory area than is the use of average FTP hot/cold percentages.

Recently it has been reported that one of the commercially available transportation models was modified to distribute start VMT along individual links based on travel time. Since there is considerable variation among vehicles in the time interval required for catalyst light-off, EPA recommends that those using this approach for their 1990 SIP submittal evenly distribute "start" emissions on the basis of the first 505 seconds of the FTP rather than try to estimate the exact amount of time within that period required for catalyst light-off. As more information becomes available, it may be possible at a later time to meld the instantaneous and distributed approaches to locating "start" emissions.

[91] The driving cycle used in FTP testing is 7.5 miles long. If shorter trips are preponderant within a given area, it is possible that the percentage of VMT occurring in one of the "start" modes is greater than the national average. Similarly, if longer trips predominate, the percentage of VMT occurring in the "stabilized" mode may be greater.

[92] The humidity correction factor is also applied to NOx emissions from motorcycles.

extra load usage fractions (for LDGVs, LDGT1s, LDGT2s), three trailer towing fractions (for LDGVs, LDGT1s, LDGT2s), a humidity level (for all LDGVs and LDGTs plus motorcycles), and dry bulb and wet bulb temperatures (used to calculate an A/C usage fraction for LDGVs and LDGTs).

A/C Usage Fraction

In the six-input option, a correction factor for A/C usage will not be applied, regardless of the value that is entered. Enter 0.0 in this case. If you wish to include the effect on the exhaust emission factors of A/C usage, enter a non-zero fractional value for this variable and appropriate dry and wet bulb temperatures, as explained below.

In the ten-input option, this variable acts as a flag, and the A/C usage fraction is calculated on the basis of the dry bulb and wet bulb temperatures (see below). If 0.0 is entered for A/C, no correction factor will be applied, although values of dry and wet bulb temperature must still be provided if the ten-input option has been chosen.

Extra Load Usage Fractions

These values are used to model the exhaust emissions effect of vehicles carrying an extra 500 lb (227 kg) load. To include this effect, three fractional values are entered (one each for LDGVs, LDGT1s, and LDGT2s), representing the fraction of all vehicles of the given type carrying such an extra load. These inputs are restricted to the range of zero to one. If the value entered is zero, no correction for the effects of extra load is applied.

Trailer Towing Usage Fraction

These inputs are used to modify exhaust emissions of vehicles towing trailers. Enter one or three values that represent the fraction of vehicles of a given type that are to be assumed to be towing trailers. These inputs are also restricted to the range of zero to one. If the value entered is zero, no correction for the effect of trailer towing is applied. In the six-input option, one value is entered and is applied to LDGVs, LDGT1s, and LDGT2s. In the ten-input option, three values are entered, and one each is applied to LDGVs, LDGT1s, and LDGT2s.

NOx Humidity Correction

This input is used to correct exhaust NOx emission factors for absolute humidity. The value entered is the absolute (specific) humidity, expressed as grains of water per pound of dry air. Absolute humidity is restricted to the range 20 to 140.[93]

[93] A value of 75 corresponds to the absolute humidity condition of the FTP. If 75 is entered as the input, then no correction will be applied.

Dry and Wet Bulb Temperatures

MOBILE4.1 will estimate the fraction of A/C-equipped vehicles with the air conditioning operating on the basis of a "discomfort index".[94] The discomfort index is calculated from the dry bulb and wet bulb temperatures, which are restricted to the range 0^0F (-18^0C) to 110^0F (43^0C). In addition, the wet bulb temperature must be less than or equal to the dry bulb temperature.[95]

There have been no revisions to any of the variables discussed in this section, or to how they are supplied to the model as input data, since the release of MOBILE4.

Guidance

In most cases, ozone pollution episodes occur during summer months and very warm to hot temperatures. It is reasonable to assume that vehicle air conditioning usage is high under such conditions. The air conditioning correction factors that are calculated in MOBILE4.1 will increase vehicle emissions, and areas that believe their motor vehicle inventory has been underestimated in the past may choose to use them. However, EPA will accept SIP inventories that do not attempt to explicitly account for vehicle air conditioning use.[96]

The same approach that is taken in developing the base year inventory must also be used for projection inventories.

The humidity correction for NOx emissions accounts for the fact that when "excess" water vapor is present, some of the heat of combustion heats water vapor rather than enhancing NOx formation. As with the air conditioning correction, EPA will accept SIP inventories that do not attempt to account for local humidity. If the humidity correction is applied in the base year, it must also be used in any projection inventories. While the humidity correction factors were developed in the late 1970s, limited testing on current technology vehicles indicates that they are still adequate.

---

[94] These values (in ^{0}F) will be used to calculate the A/C usage fraction on the basis of the discomfort index only if the ten input option is selected and a non-zero value is entered for the variable AC. If used, this calculated value overrides the value read in for AC, which serves as a flag indicating that this correction is desired (see above).

[95] If any of these three conditions is not met, MOBILE4.1 will print an error message.

[96] There is some uncertainty surrounding the air conditioning correction factors. The emissions effect of operating the air conditioner for late model year vehicles is not well quantified. Also, the fraction of vehicles equipped with air conditioning (built into MOBILE4.1) is substantially higher for the vehicle fleet of the late 1980s than it was for the fleet of the late 1970s, which magnifies the consequence of a possible error. Thus, the use of the air conditioning corrections to emissions is acceptable but not required in the development of SIP inventories.

3.3.6 Control Programs

In general, VMT should be disaggregated so that vehicles generating the VMT are subject to a common control program.[97] This issue applies especially for I/M versus no I/M and ATP versus no ATP areas, specifically interstate areas but also where the inventory area is partially designated attainment and partially designated non-attainment. EPA will accept the use of a single correct pair of VMT fractions (with and without I/M) for the entire inventory area, even if these fractions may be incorrect within one county or a state portion of a non-attainment area.[98]

3.3.6.1 Refueling Emissions

Description

The refueling of gasoline-fueled vehicles results in the displacement of fuel vapor from the vehicle fuel tank to the atmosphere. There are two basic approaches to the control of vehicle refueling emissions, generally referred to as "Stage II" (at the pump) and "onboard" (on the vehicle) vapor recovery systems (VRS). MOBILE4.1 has the ability to model uncontrolled levels of refueling emissions (i.e., assuming no requirements for Stage II or onboard VRS systems) as well as the effects of the implementation of either or both of the major types of vapor recovery systems.

There are five approaches available in MOBILE4.1 for modeling vehicle refueling emissions:

- Model uncontrolled refueling emissions for all gasoline-fueled vehicle types;
- Model refueling emissions assuming a Stage II VRS requirement;
- Model refueling emissions assuming an onboard VRS requirement;
- Model refueling emissions assuming both Stage II and onboard VRS requirements;
- Account for refueling emissions by some means other than MOBILE4.1.

No additional inputs are required for either the first or the last approach. Additional information is needed, however, to model the effects of either or both VRS requirements on refueling emissions.

---

[97] VMT should also be disaggregated so that the set of operating conditions under which the vehicles are generating the VMT is fairly homogeneous.

[98] For example, if it is difficult to tell which of two states' vehicles produce the VMT on each side of the border, both states could assume that the VMT on their side comes from a random mix of their collective vehicle population.

Four inputs must be provided to model the effect of a Stage II VRS requirement: the start year (calendar year in which the requirement takes effect), the phase-in period (number of years for Stage II VRS installation to be completed), and the system efficiency (in percent) at controlling refueling emissions from light-duty vehicles and trucks, and from heavy-duty vehicles.[99]

Only two inputs are required to model the effect of an onboard VRS requirement: the starting model year and which of the four possible vehicle types (LDGV, LDGT1, LDGT2, HDGV) are subject to the requirement.[100]

Both sets of inputs must be supplied to model both VRS requirements concurrently.

Guidance

EPA recommends that states and others use MOBILE4.1 to model refueling emissions for highway vehicle emission inventories. The refueling emission factors can be calculated in grams per gallon of dispensed fuel (g/gal) or in grams per mile (g/mi). The preferred approach is to calculate g/gal refueling emission factors that reflect the applicable Stage II requirements, then multiply the g/gal emission factor by total gasoline sales. This is the most accurate method of estimating the contribution of refueling emissions to the inventory, particularly for areas with reliable data on gasoline sales.[101] This method also accounts for refueling emissions generated when gasoline is purchased in an area but consumed largely outside of the area, and does not include refueling emissions for through traffic that does not refuel in the area.[102] When good data on gasoline sales is not available, the use of the g/mi refueling emission factor is more convenient and, while also more approximate, acceptable for SIP inventory development.

Stage II

The overall effectiveness of a Stage II vapor recovery system at controlling refueling emissions depends on a number of factors, including the baseline efficiency of the system used, the portion of total area gasoline consumption handled by service stations exempt from Stage II requirements, and the frequency and stringency of enforcement programs. In general, the effectiveness of a Stage II VRS at controlling refueling emissions will be greater for light-duty vehicles and trucks than for heavy-duty vehicles, since HDGVs are more likely to

---

[99] There are no national average or default values for Stage II efficiency.

[100] EPA has no plans to promulgate regulations for onboard vapor recovery.

[101] State tax revenue receipts on county gasoline sales are often used for this purpose.

[102] One alternative to using MOBILE4.1 to calculate refueling emissions is to use the applicable AP-42 emission factors. However, the effects of an onboard vapor recovery system requirement cannot be modeled accurately using this approach. MOBILE4.1 makes use of improved predictive equations to calculate refueling emission factors, and these have not yet been incorporated into AP-42.

be refueled at service stations (or other fuel dispensing locations, such as private refueling depots) that will be exempted from Stage II requirements.

EPA has estimated the in-use efficiency of Stage II programs based on the dispensed volume of the stations exempted from the requirement and the frequency of inspections at stations subject to it. The 1990 Clean Air Act exempts from the Stage II requirement stations that sell less than 10,000 gallons of gasoline per month (50,000 gallons per month for independent small marketers, as defined in the Act). This exemption level, along with a semi-annual inspection frequency, results in 83% in-use efficiency for a Stage II program. If inspections occur annually, efficiency is estimated to be 77%. Minimal inspections reduce the efficiency to 56%. EPA will accepts these efficiency levels as MOBILE4.1 inputs when modeling Stage II controls as part of the 1990 SIP submittal.

Spillage

Emissions from fuel spillage also can be modeled using MOBILE4.1. The "baseline" spillage factor (assuming no controls) is 0.31 g/gal. of dispensed fuel. If no controls are assumed, this factor is added to MOBILE4.1's calculated displacement loss, which, in turn, is based on ambient temperature and RVP. If Stage II is modeled, then the in-use efficiency percentages input determine the reduction in both displacement and spillage.

Displacement loss can be separated from fuel spillage, using the grams per gallon emission factors from the expanded evaporative output. If no controls are used, fuel displacement emissions should be calculated by subtracting the 0.31 g/gal spillage factor from the emission factor. In this case, spillage would be 0.31 g/gal.

To model the effects of Stage II on displacement and spillage losses, the percent emission reduction for LDGVs, LDGTs, and HDGVs must be input. These percentages are then multiplied by the 0.31 g/gal spillage factor to arrive at a value for spillage. Displacement loss is then calculated as the gram/gallon emission factor minus the calculated spillage loss.

3.3.6.2 Inspection and Maintenance Programs

Description

Many areas of the country have implemented inspection and maintenance (I/M) programs as a means of reducing mobile source air pollution. MOBILE4.1 can model the effect of an operating I/M program, based on the specification of certain parameters that describe the program. Standard low-altitude area emission reduction credits are contained within the MOBILE4.1 code itself, while standard high-altitude area emission credits are included as a separate file on the MOBILE4.1 diskettes and tapes.[103]

[103] The model can also accept alternate credit matrices as input. These must be developed by EPA. Areas for which the standard emission reduction credit matrices are inappropriate should contact the Office of Mobile Sources (Air Quality Analysis Branch, 313/668-4325) to obtain the required matrices.

The following program parameters must be specified in order to model an I/M program:

- Program start year (calendar year that program begins);
- Stringency level (percent);
- First (earliest) and last (latest) model years of vehicles subject to the requirements of the program;
- Waiver rates (percent of failed vehicles; one rate applicable to pre-model year 1981 vehicles and one rate applicable to 1981 and later model year vehicles);
- Compliance rate (percent);
- Program type (centralized; decentralized and computerized; or decentralized and manual);
- Frequency of inspection (annual or biennial);
- Vehicle types covered by the program;
- Test type (idle, 2500/idle, loaded/idle);
- Whether alternate I/M credits are to be supplied;
- IM240 transient test first model year;
- Purge system test first model year;
- Pressure system test first model year.

The last three parameters in the list above are optional. They refer to the earliest model year of vehicles subject to:

- transient testing of HC and CO emissions (where the vehicle is tested on a chassis dynamometer over a transient driving cycle, and mass emissions are measured using a constant volume sampling (CVS) system);
- functional purge testing of the evaporative emission control system;
- functional pressure testing of the evaporative emission control system.

While these three types of testing may be incorporated into many future I/M programs, there were no areas using any of these tests as part of their I/M programs in 1990. Thus, these three parameters[104] should not be included in estimating the 1990 base year emissions inventory.

The following sections discuss the terminology used to describe I/M programs for purposes of modeling the emission benefits of such programs using MOBILE4.1. In general, MOBILE4.1 assumes that the I/M program is mandatory, periodic, and covers a well-defined group of vehicles.[105]

---

[104] MOBILE4.1 will run correctly if an I/M program is specified and only the first ten parameters from the above list are provided. Additional information on the IM240 and purge and pressure testing can be found in the "User's Guide to MOBILE4.1" (sections 2.2.5.4, 2A.1.16, 2A.1.17, and 2A.1.18).

[105] There are many details, such as instrument specifications, that are beyond the scope of this document to treat. I/M program planners should consult with EPA (Emission Control Strategies Branch, 313/668-4476) if they have further questions regarding program requirements.

3.3.6.2.1 I/M

I/M refers to "inspection and maintenance" programs, which are inspections of vehicles using a measurement of tailpipe emissions and which require that all vehicles with tailpipe emissions higher than the program cutpoints be repaired to pass a tailpipe emission retest. Inspections that are aimed at verifying the presence and proper connection of emission control devices are called anti-tampering programs.[106]

3.3.6.2.2 Start Year

The year in which the periodic inspection program begins to require both inspection and repairs is called the start year. MOBILE4.1 only provides for a January 1st start date. Other start dates will require interpolation between two MOBILE4.1 runs to give accurate estimates of benefits. Separate start dates may be entered for the tailpipe emissions check and anti-tampering portions of an I/M program.

3.3.6.2.3 Stringency

Stringency is the tailpipe emission test failure rate expected in an I/M program among pre-1981 model year passenger cars or pre-1984 light-duty trucks, based on the short test[107] emission cutpoints.[108] The expected failure rate can be determined by applying the program cutpoints to a representative sample of vehicles tested in a survey. Actual failure rates reported by a program can also be used to determine stringency, but only when there is no possibility of significant testing or data reporting errors. MOBILE4.1 assumes that the failure rate remains fixed at the stringency level for each evaluation year. MOBILE4.1 will not allow a stringency level less than 10% or greater than 50%.

3.3.6.2.4 First Model Year

The first model year refers to the oldest model year vehicle that is always included in the inspection program. MOBILE4.1 assumes that all vehicle classes have the same model year coverage and does not allow for a separate coverage period for each vehicle class. Some programs do not fix the model years covered by the program, and instead use a coverage "window" to define those vehicles that must be inspected. For example, such a program may

---

[106] Such tailpipe I/M and anti-tampering programs are sometimes referred to collectively simply as "I/M programs" in other EPA documents.

[107] A tailpipe emission short test is any one of several emission testing procedures authorized by EPA for use in emission testing programs. They include a simple idle test, where emissions are sampled as the vehicle idles in neutral gear, to more elaborate tests, such as the IM240, where the vehicle's emissions are sampled during a simulated drive using a chassis dynamometer.

[108] Emission cutpoints are the emission level measurements used to determine whether a vehicle passes or fails the short test. If the vehicle's tailpipe emission level exceeds the cutpoints set for any of the measured pollutants, the vehicle fails.

cover only vehicles 15 years old or younger. Since model year cohorts that leave the I/M program in this way retain a partial I/M influence for a period of some uncertain number of years beyond their last inspection, such programs cannot be modeled exactly using MOBILE4.1. However, as a practical matter, EPA is willing to assume that a vehicle that has left the I/M program as of a certain evaluation year was never inspected.[109]

3.3.6.2.5 Last Model Year

The last model year refers to the youngest (newest) model year vehicle that is subject to the inspection program. The combination of first and last model year inputs makes it possible to model a program that covers only particular model years. Many programs routinely include new model year vehicles in the program as they reach their one year anniversary. In such cases the year 2020 should be designated as the last model year.[110] If inspection is delayed until vehicles are two or three years old, then the input value for the last model year will be different for each evaluation year.[111]

3.3.6.2.6 Waiver Rates

Many I/M programs waive the requirement to pass a retest if certain defined criteria are met. Typically, waivers are granted for vehicles whose owners have spent more than a certain dollar amount repairing the vehicle in an attempt to pass the test.

The waiver rate inputs to MOBILE4.1 reduce the estimated benefit of the I/M program. The waiver rates are always calculated as a percent of non-duplicate initial test failures. Waiver rates must be provided for pre-1981 and for 1981 and later model year light-duty vehicles.[112]

---

[109] An alternate approach is to add one extra model year to the coverage window to represent all model years still experiencing some residual but declining I/M benefit. EPA will accept this approach for purposes of estimating 1990 emissions.

[110] MOBILE4.1 assumes, in the calculation of I/M credits, that vehicles less than one year old are exempt from inspection.

[111] Programs may include delayed inspections because a state considers such a program to be more cost effective, since emissions of new vehicles are generally very low.

[112] MOBILE4.1 assumes that tampered or misfueled vehicles cannot receive waivers, and so does not reduce the ATP benefit based on the waiver rate.

Guidance

For an historical inventory, the actual waiver rate must be determined and used as the input to MOBILE4.1. For future year inventories, the historical waiver rate should be used unless a change will be made to the criteria for granting waivers.[113]

3.3.6.2.7 Compliance Rate

Compliance rate refers to the level of compliance with the inspection program.[114] For example, assume a program required that all passenger cars be inspected each year, and that 100,000 passenger cars were registered in the area covered by the program. If in a given year only 95,000 passenger cars completed the inspection process to the point of receiving a final certificate of compliance or a waiver, the remaining 5,000 vehicles may have avoided the inspection requirement. If those vehicles did, in fact, avoid the inspection requirement, the compliance rate for the program would then be 95%.[115]

MOBILE4.1 uses a single compliance rate to reduce both the I/M and ATP portions of the program benefits. The reduction in benefit is not linear. The benefit loss per vehicle assumes that the failure rate among non-complying vehicles will be larger than the expected failure rate in the fleet. As the rate of non-compliance increases, the non-complying failure rate will approach and finally equal the expected failure rate.

Table 3-2 shows the loss of benefit assumed for the enforcement fraction:

---

[113] If tighter criteria are planned, a lower waiver rate may be assumed. For areas subject to the requirements for Enhanced I/M, including the $450 expenditure requirement, a future waiver rate as low as one percent may be assumed, but planners should realize that an underestimation of the future waiver rate may cause later problems in demonstrating reasonable further progress milestones. EPA may also consider a finding of SIP non-implementation if an actual waiver rate substantially exceeds the rate assumed in inventory forecasts.

[114] The compliance rate input is also used to account for vehicles that are waived from compliance without any testing. For example, vehicles with special testing problems or vehicles owned by certain groups of individuals may be automatically waived.

[115] Other possible reasons for the 5000 vehicle discrepancy include vehicles registered but scrapped or transferred out-of-state prior to the inspection due date.

Table 3-2

Benefit Assumed for Enforcement Fraction

Compliance Rate	Non-Compliance Rate	Non-Complier Failure Rate Adjustment	Fraction Benefit Loss	Fraction Benefit Remaining
100%	0%	2.0	.000	1.000
99%	1%	2.0	.020	.980
98%	2%	2.0	.040	.960
97%	3%	2.0	.060	.940
96%	4%	2.0	.080	.920
95%	5%	1.5	.095	.905
90%	10%	1.4	.169	.831
85%	15%	1.3	.238	.762
80%	20%	1.2	.302	.698
75%	25%	1.1	.361	.639
70%	30%	1.0	.415	.585
50%	50%	1.0	.615	.385

Guidance

Historical compliance should be determined by sticker surveys, license plate surveys, or a comparison of the number of final tests to the number of vehicles subject to the I/M requirement.[116] Planners should not assume a compliance rate of 100%. An area with a registration denial system using automatically generated compliance documents that uniquely identify the complying vehicle and that are serially numbered and accounted for, that rely on centralized processing by government clerks with management oversight, may assume a 98% rate unless there is evidence to indicate otherwise.[117]

3.3.6.2.8 Inspection Frequency

MOBILE4.1 allows for two inspection frequencies. "Annual" means that all covered vehicles must be inspected once each year. "Biennial" means that each vehicle is inspected once every two years, such that either half of the vehicles of each model year are inspected

[116] The number of initial inspections should not be used to calculate the compliance rate, since some cars may drop out after failing one or more tests.

[117] An overestimation of the future compliance rate may cause problems later on in demonstrating that Reasonable Further Progress milestones have been met. Also, EPA may issue a finding of SIP non-implementation, if the actual compliance rate is substantially less than the rate assumed in inventory forecasts.

each calendar year, or vehicles of one model year are inspected in alternate calendar years. Any other inspection frequency would require alternate I/M credits provided by EPA.

3.3.6.2.9 Vehicle Classes

MOBILE4.1 program benefits are calculated separately for each gasoline-fueled vehicle class. No emission benefits are estimated for diesel vehicles or motorcycles. The vehicle class designations are based on the same definitions under which vehicles are certified:[118]

- LDGV - light-duty gasoline-fueled vehicles (passenger cars);
- LDGT1 - light-duty gasoline-fueled trucks less than 6000 lbs gross vehicle weight (lighter pick-up trucks and vans);
- LDGT2 - light-duty gasoline-fueled trucks greater than 6000 lbs but less than 8,500 lbs GVW (heavier pick-up trucks and vans and many commercial trucks);
- HDGV - heavy-duty gasoline-fueled vehicles greater than 8500 lbs GVW (heavier commercial trucks, including highway hauling trucks).

3.3.6.2.10 I/M Test Types

There are four I/M tailpipe test types allowed in MOBILE4.1. These test types only apply to the inspection of 1981 and newer model year passenger cars and 1984 and newer light-duty trucks.[119] The chosen test type is assumed to be applied to all 1981 and newer passenger cars and 1984 and newer light-duty trucks both at the initial inspection and at the retest.[120]

Idle Test

The idle test is a measurement of VOC and CO emission concentrations of a fully warmed vehicle as it idles in neutral or park.

2500/Idle Test

The 2500/idle test is a measurement of VOC and CO emission concentrations of a fully warmed vehicle operating at 2500 rpm, first, in neutral or park and second, at idle. The vehicle must pass both 2500 rpm and idle tests.

---

[118] Those areas that do not use the same vehicle class designations in their vehicle registration data as are used in MOBILE4.1 must take care not to claim coverage for too many vehicles.

[119] The concept of stringency already takes into account the effect of test type on the benefits that accrue to older vehicles.

[120] In all cases MOBILE4.1 assumes that the cutpoints used for the inspections are 1.2% CO and 220 ppm VOC.

Loaded/Idle Test

The loaded/idle test is a measurement of VOC and CO emission concentrations of a fully warmed vehicle operated first, on a chassis dynamometer at a constant cruise speed and dynamometer load, and second, at idle in neutral or park. The vehicle must pass both the cruise and idle tests.

IM240 Transient Test

The IM240 transient test is a measurement of VOC and CO emission concentrations of a vehicle operated over a range of speeds. The IM240 was patterned after the Urban Dynamometer Driving Schedule used to conduct the Federal Test Procedure (FTP). In order for MOBILE4.1 to estimate the effects of using the I/M 240 test in an I/M program, a set of alternative I/M credits must be entered as input.[121] MOBILE4.1 assumes that transient testing is applied to all model years and to all vehicle types covered by the I/M program.

Purge Test

The purge test is a functional test of the purge capabilities of the evaporative emission control system. The flow rate of canister purge is measured during transient operation of a vehicle on a chassis dynamometer using a flow measurement device, and cutpoints for minimum flow rate are used to determine if the vehicle passes or fails. Vehicles failing the purge test are required to have repairs performed to enable the vehicle to pass the test. MOBILE4.1 assumes that all model years and vehicle types subject to the I/M program are also subject to functional purge testing, if a first model year for such testing is specified as an input.

Pressure Test

The pressure test is a functional test of the evaporative emission control system for leaks. The fuel tank and related hoses and pipes are pressurized, and the pressure loss is monitored over time. Cutpoints defining the maximum allowable loss of pressure are set and used to determine if the vehicle passes or fails. Vehicles failing the pressure test are required to have repairs performed to enable the vehicle to pass the test. MOBILE4.1 assumes that all model years and vehicle types subject to the I/M program are also subject to functional pressure testing if, a first model year for such testing is specified as an input.

[121] These are provided on diskettes and tapes distributed with the model.

3.3.6.2.11 Alternate I/M Credits

In special cases where the design of an I/M program does not fit into any of the categories defined in MOBILE4.1,[122] an alternative set of credits may be input. These credits are then used by the model to determine the benefits of the I/M program.[123]

One set of alternate I/M credits applies to purge and pressure system checks of the evaporative control system. To estimate these credits MOBILE4.1 requires that the oldest model year covered by the purge system check and the oldest model year covered by the pressure check be entered as inputs. MOBILE4.1 assumes that all vehicle types covered by the I/M program are also covered by the purge and pressure system checks. It also assumes that the purge system check is done as part of a transient exhaust emission check.

3.3.6.2.12 Centralized Programs

Centralized inspection programs refer to those programs that completely separate vehicle inspection from vehicle repair. Usually, high-volume inspection stations, run either by the local agency itself or by a contractor, perform all initial tests and retests after repair. Garages and other repair facilities are not allowed to perform official tests. Independent centralized programs are the standard used to determine the emission benefits for I/M and ATP program designs.[124]

3.3.6.2.13 Decentralized Programs (Manual)

Decentralized inspection programs refer to those programs where the local program agency licenses service stations and garages to perform official inspections and re-inspections. These licensed inspection stations are allowed to perform repairs on the vehicles they inspect. The number of licensed inspection stations in decentralized programs is larger, and the volume per station is smaller than for centralized programs.

---

[122] Examples of such programs are those with a semi-annual or tri-annual inspection frequency.

[123] Normally these factors will be supplied by EPA at the request of the program manager or air quality planner.

[124] Test-only programs are considered centralized even if they are decentralized in the sense of multiple businesses.

Decentralized programs have been found to be less effective in reducing emissions than are centralized programs. As a result, MOBILE4.1 reduces the emission benefits of a decentralized program to 50% of that attributed to a centralized design for both the tailpipe test portion and the ATP portion of the program.[125] Modelers who can demonstrate a higher level of effectiveness for a decentralized I/M program should contact EPA.[126]

3.3.6.2.14 Computerized Inspection

Some decentralized I/M programs require the use of computerized emission analyzers. These analyzers contain small computers which keep track of all official inspection activity, automatically calibrate the instrumentation, and prompt the inspector during the inspection procedure. The computer also prepares a machine-readable record of all official inspections and calibrations, and will not allow inspections whenever it determines that the instrumentation is out of calibration.

MOBILE4.1 assumes that the I/M portion of a decentralized computerized inspection program will be 50% as effective as a centralized program of similar stringency (i.e., the benefits of the program are discounted by 50%). This benefit discount is the same as for manual decentralized programs.[127] As noted above, this benefit reduction includes the effect of waivers, if any, and is not applied on top of a waiver-related loss of potential benefits.[128]

Decentralized computerized inspection programs will also have some of the benefits from the ATP portion of the program reduced by 50%.[129] Modelers who can demonstrate a higher level of effectiveness for a decentralized I/M program should contact EPA.[130]

---

[125] The 50% reduction in benefits from the tailpipe portion of the test includes the loss due to waivers, if any. For decentralized I/M programs, the waiver rate input of the model is disabled so that user input of waiver rates has no effect on I/M benefits.

[126] Since the degree to which manual decentralized programs are less effective than centralized programs is not a MOBILE4.1 input, it is necessary for EPA to prepare a special version of the model to account for the effects of a decentralized I/M program that has been shown to have an effectiveness level different from that of a centralized program by more or less than 50%. The demonstration of increased effectiveness should rely on historical data and not on arguments for an anticipated increase in effectiveness.

[127] Although the computerized analyzers make it easier for inspections to be performed correctly, EPA audits have shown that the overall performance of inspectors in computerized decentralized I/M programs is no better than in manual decentralized I/M programs.

[128] For decentralized I/M programs, the waiver rate input of the model is disabled so that even if waiver rates are input to MOBILE4.1, they will have no effect on I/M benefit calculations.

[129] Most of the deterrence effect of the program, which deters tampering that has not yet occurred, is unaffected by the decentralized discount.

[130] Since the degree to which computerized decentralized programs are less effective than centralized programs is also not a MOBILE4.1 input, it is necessary for EPA to prepare a special version of the model to account for the effects of a decentralized I/M program that has been shown to have an effectiveness level different from that of a centralized program by something other than 50%. The demonstration of increased effectiveness should rely on historical data and not on arguments for an anticipated increase in effectiveness.

3.3.6.2.15 Tech I-II and Tech IV+

The calculation of I/M benefits for MOBILE4.1 was done by technology group, which can roughly be determined by model year for each vehicle type. These technology groups have come to be referred to by numbers. The table below summarizes the technology groupings used in MOBILE4.1 and their respective application to gasoline-fueled passenger cars and light trucks. Within the Tech IV group, there are separate I/M credits for each model year of LDGVs, and a mapping of LDGT model years to similar technology LDGV model years.[131]

	Model Years Covered		
Technology Grouping	LDGV	LDGT1	LDGT2
I	Pre-1975	Pre-1975	Pre-1979
II	1975-80	1975-83	1979-83
IV+	1981+	1984+	1984+

3.3.6.3 Anti-Tampering Programs

Description

Some areas of the country have implemented anti-tampering programs (ATPs) to reduce the frequency and resulting emission effect of emission control tampering (e.g., misfueling, removal or disablement of catalytic converters). MOBILE4.1 can estimate the emission factor effects of such programs. The following inputs are required to model an anti-tampering program:

[131] Sets of alternate I/M credits may contain both Tech I and II credits, only Tech IV+ credits, or Tech I and II and Tech IV+ credits together. This is usually indicated in the header block of the alternate I/M credit deck.

- Start year (calendar year in which the program begins);
- First (earliest) and last (most recent) model years of vehicles subject to the program;
- Vehicle types covered by the program;
- Program type (centralized or decentralized);
- Frequency of inspection (annual or biennial);
- Compliance rate (percent);
- Inspections performed (air system, catalyst, fuel inlet restrictor, tailpipe lead deposit test, EGR system, evaporative system, PCV, gas cap).[132]

There have been no revisions to the information required to model ATP effects since the release of MOBILE4.

The following sections discuss the terminology used to describe anti-tampering program inspections for purposes of modeling the emission benefits of such programs using MOBILE4.1. In general, it is assumed that the program is mandatory, periodic, and covers a well-defined group of vehicles.

It is also assumed that the inspections are primarily visual rather than functional and involve no disassembly or disconnection to gain access to hidden components (other than removal of the gas cap to view the fuel inlet restrictor). However, program regulation writers are encouraged to define failure in broad enough terms of visual damage and proper operating condition so that any emission control component determined by the inspector to be non-functional can be properly failed and repaired.

A program that inspects for tampering only when a vehicle has failed its tailpipe I/M inspection, or only when a vehicle owner requests a test waiver, is not considered as an anti-tampering program, garners no emissions benefits, and should not be modeled in MOBILE4.1.

The following sections discuss the terminology used to describe anti-tampering programs for purposes of modeling the emission benefits of such programs using MOBILE4.1. In general, MOBILE4.1 assumes that the anti-tampering program is mandatory, periodic, and covers a well-defined group of vehicles.[133]

---

[132] MOBILE4.1 will only model an ATP with an evaporative system inspection and provide appropriate emission credits if a gas cap inspection is also included. If an evaporative system inspection is indicated, but a gas cap inspection is not indicated, MOBILE4.1 will issue a warning message, and no emission credit will be given for the evaporative system inspection. However, the converse is not true. A gas cap inspection may be indicated without an indication of an evaporative system inspection.

[133] There are many details (such as replacement catalyst specifications) that are beyond the scope of this discussion. Program planners should consult with EPA's Office of Mobile Sources (Emission Control Strategies Branch, 313/668-4476) if there are questions regarding the requirements of ATP inspections.

3.3.6.3.1 ATP

Anti-tampering programs are periodic inspections of vehicles to detect damage to, disablement of, or removal of emission control components. Owners are required to restore the vehicle's emission control system and have the vehicle reinspected. Programs that inspect for tampering only those vehicles failing an I/M tailpipe test are not considered to have an anti-tampering program and should not be included in estimating a mobile source emissions inventory.

3.3.6.3.2 Tampering and Misfueling

Any physical damage to, or disablement or removal of, an emission control component is considered tampering in MOBILE4.1. This does not limit tampering only to deliberate disablements or only to those disablements of which the vehicle owner is aware. Tampering, therefore, can often be a result of poor maintenance rather than some deliberate action by the vehicle owner or service mechanic.

Misfueling is the use of leaded fuel in any vehicle that is equipped with a catalytic converter. This includes inadvertent use of leaded fuel without the knowledge of the vehicle owner.

3.3.6.3.3 Air Pump Inspection

Air pump systems supply fresh air needed by the catalytic converter to reduce engine emissions before they leave the tailpipe. Inspectors should check for missing belts and hoses and proper connection at the exhaust manifold. Sometimes the entire pump and its plumbing are removed. A valve is sometimes used to route air away from the exhaust stream during certain operating modes. This valve should be checked for proper hose and wire connections. Often the air is injected directly into the catalytic converter underneath the vehicle. If so, this connection should be checked. Any missing, damaged, or altered components of the air pump system should be replaced.

3.3.6.3.4 Catalyst Inspection

The catalytic converter, sometimes referred to simply as the catalyst, oxidizes excess volatile organic compounds and carbon monoxide from the engine exhaust into water and carbon dioxide. Newer catalysts also reduce oxides of nitrogen in the exhaust. The metals that accomplish this task are most commonly coated on a ceramic honeycomb inside the stainless steel shell of the catalyst. The catalyst resembles a muffler in some ways, but would not be confused with a muffler because it is farther forward on the vehicle, and its stainless steel shell will not rust.

Some cars will have more than one catalyst, so the number of catalysts expected should be determined before the inspection begins. Some catalysts are located very near the exhaust manifold, so the inspector should be sure to check the entire length of the exhaust piping from the exhaust manifold to the muffler before determining that the catalyst is not present.

Emission credit should not be claimed using MOBILE4.1 unless regulations provide a mechanism to ensure that failed cars are correctly repaired with original equipment manufacturer (OEM) or approved aftermarket replacements. Program planners should consult with EPA to avoid incorrectly claiming credit.

3.3.6.3.5 Fuel Inlet Restrictor Inspection

Vehicles requiring the use of only unleaded gasoline have been equipped with fuel inlets that only allow use of narrow fuel nozzles. Leaded fuel is required to be dispensed only from pumps using wider nozzles. Any vehicle found to have a fuel inlet which allows a leaded fuel nozzle to be inserted, such as having the nozzle size restriction removed, is assumed to have used leaded fuel. Leaded fuel permanently reduces the ability of the catalytic converter to reduce emissions. Therefore, vehicles found with a fuel inlet that allows insertion of a leaded fuel nozzle should be required to replace the catalytic converter. In addition, the vehicle's fuel inlet should be repaired to allow only the insertion of unleaded fuel nozzles.

Repair of the fuel inlet restrictor only is not considered a repair that will reduce the emissions of the vehicle. Since the damage to the emission control of the vehicle occurs in the catalyst, it is the catalyst that must be replaced to result in any substantial emission reduction. The inlet restrictor must be replaced simply as protection for the new catalyst. If the program regulators do not require catalyst replacement, the MOBILE4.1 inputs should indicate that an inlet check is not performed.[134]

3.3.6.3.6 Tailpipe Lead Detection Test

Leaded fuel permanently reduces the ability of the catalytic converter to reduce engine emissions before they leave the tailpipe. Therefore, vehicles found to have used leaded fuel should be required to replace the catalytic converter. EPA has allowed for the use of a lead detection test in the vehicle tailpipe as a method to detect the use of leaded fuel. Since this is a chemical test, care must be taken to ensure that the test is properly conducted and that the results are properly interpreted.

Vehicles with evidence of lead deposits in the tailpipe have used leaded fuel. Since the damage to the emission control of the vehicle occurs in the catalyst, it is the catalyst that

[134] MOBILE4.1 assumes that inspectors are not allowed to skip this inspection because the fuel inlet is concealed by a locked door.

must be replaced to result in any substantial emission reduction. If the program regulators do not require catalyst replacement, then the input to MOBILE4.1 should indicate that a tailpipe lead test was not preformed.[135] Anti-tampering programs that require failure of both the fuel inlet restrictor inspection and the tailpipe lead detection test before requiring replacement of the catalyst get credit for neither. The input to MOBILE4.1 should not indicate either inspection was performed.

3.3.6.3.7 EGR Inspection

The exhaust gas recirculation (EGR) system reduces oxides of nitrogen by routing some of the exhaust back into the intake manifold. Although the primary component of the system is the valve that controls the flow between the exhaust and intake manifolds, most systems are quite complex, with various sensors and valves which together control the operation of the entire system. Any system observed with missing or damaged components or misrouted or plugged hoses and wires should be failed and repaired.[136] While MOBILE4.1 has an input flag for EGR inspections, there are no emission reductions associated with them. This reflects EPA's assessment that these difficult visual inspections are virtually never performed correctly and result in virtually no repairs. Programs with evidence to the contrary should consult EPA.

3.3.6.3.8 Evaporative Control System

The evaporative control system collects gasoline vapors from the gas tank and carburetor bowl and stores them in a charcoal canister. During certain engine operations, the canister purges, releasing the vapors, which are then routed to the engine to be burned. In addition to the evaporative canister itself, the system includes varying numbers of hoses, wires, and control valves.[137] Any system observed with missing or damaged components or misrouted or visually obvious plugged hoses and wires should be failed and repaired. This inspection flag should not be used to indicate any functional pressure or purge testing of the evaporative emission control system. The benefits of such tests are calculated separately.[138] Purge and pressure testing is, however, assumed to detect all evaporative control system tampering.

---

[135] The tailpipe as well as the catalyst should also be replaced to avoid failing a subsequent inspection test.

[136] Hoses may be plugged, either deliberately or by neglect.

[137] Hoses may be plugged, either deliberately or by neglect.

[138] Modeling the benefits of functionally testing purge and/or pressure evaporative systems requires that the initial model year of vehicles subject to such tests be input. See section 3.3.6.2.10.

3.3.6.3.9 PCV Inspection

The positive crankcase ventilation (PCV) system routes the vapors from the crankcase to the intake manifold where they can be burned by the engine. The PCV system has two major loops. The most critical connects the crankcase to the throttle or the intake manifold via a hose and usually contains a valve. Another hose connects the crankcase to the air cleaner to provide the crankcase with filtered fresh air. Any system observed with damaged or missing components or with hoses misrouted or plugged should be failed and repaired.

3.3.6.3.10 Gas Cap Inspection

Gas caps are actually part of the evaporative control system. Without a properly operating gas cap, fuel vapors from the gas tank would escape. On some vehicles, a missing gas cap will also cause the evaporative system canister to purge incorrectly. Inspectors should examine the fuel inlet area of each vehicle to determine that the gas cap is present. If not, the vehicle should be failed and the gas cap replaced.[139] Pressure testing is assumed to detect all missing gas caps.

3.3.6.3.11 Tampering Rates

Description

MOBILE4.1 calculates tampering rates as a piecewise linear function of accumulated mileage for each gasoline-fueled vehicle type[140] and for eight types of tampering.[141] These rates are combined with the corresponding fractions of vehicles equipped with the given control technology and emissions rates to obtain the tampering offsets.[142] These offsets are later added to the non-tampered emission factors.

MOBILE4.1 uses tampering rates based on EPA Office of Mobile Sources (OMS) analysis of multi-city tampering survey results. EPA recommends that the tampering rates included within MOBILE4.1 be used.[143]

---

[139] MOBILE4.1 assumes that inspectors are not allowed to skip this inspection even if the fuel inlet is concealed by a locked door.

[140] The four vehicle types are LDGV, LDGT1, LDGT2, and HDGV.

[141] The eight tampering types are air pump disablement, catalyst removal, overall misfueling, fuel inlet restrictor disablement, exhaust gas recirculation system disablement, evaporative control system disablement, positive crankcase ventilation system disablement, and missing gas caps.

[142] Tampering offsets are the increases in emissions that result from a given type of tampering.

[143] If EPA or local authorities have performed a statistically valid anti-tampering survey in a particular area, the Office of Mobile Sources will consider whether it is possible to develop locality-specific tampering rates from that survey for use in modeling for the area. A sample size larger than that collected by EPA in the typical one week of its survey is essential.

EPA has determined through its tampering surveys that tampering rates are lower in areas with operating I/M programs than in areas without such programs. Two complete sets of tampering rates representing I/M and non-I/M cases therefore come with the model.

If no I/M program exists, the set of non-I/M program tampering rates must be input. If an I/M program does exist, however, then two sets of tampering rates must be input; the one representing the non-I/M case accounts for tampering that occurred before the start of the I/M program, and the one representing the I/M case accounts for tampering that occurred after the start of the I/M program.

MOBILE4.1 uses three rate equations for each type of tampering, one for each vehicle type subject to tampering[144] in non-I/M areas and three more rate equations for each type of tampering in the I/M areas.[145]

The only change to anti-tampering program inputs since MOBILE4 is that when alternate tampering rates are used, additional equations are required. This is due both to the increase in model year groups (from two in MOBILE4 to three in MOBILE4.1), and the use of a second deterioration rate to describe the increase in tampering rates as a function of mileage for mileages over 50,000.[146, 147]

Guidance

The tampering rates built into MOBILE4.1 are the rates that should be used in all Clean Air Act (CAA) mandated development of mobile source emission inventories. Use of any other tampering rates in CAA-related work must be based on actual in-use tampering surveys, and must be approved in advance by EPA. A local tampering survey would have to be quite large to justify reliance on it in preference to the MOBILE4.1 rates. For guidance regarding EPA approval of local tampering surveys and the development of tampering rates based on such surveys, contact the Office of Mobile Sources' Field Operations and Support Division, 202/382-2633. For guidance on the analysis of data collected in a local tampering survey or for further guidance on developing the information required to model the emissions effect of an anti-tampering program, contact OMS's Emission Planning and Strategies Division, 313/668-4367.

---

[144] The three equations are used to model pre-1981 model year vehicles, 1981-83 model year vehicles, and 1981 and later model year vehicles.

[145] These rate equations are based on OMS analysis of national tampering survey data.

[146] A second, higher deterioration rate is applied only to LDGVs in MOBILE4.

[147] MOBILE4.1 assumes that the maximum rate of tampering for vehicles of any given model year is the rate at 130,000 mi (ZML + 5●DR1 + 8●DR2).

3.4 VEHICLE MILES TRAVELED

This section describes two methods of estimating highway vehicle miles traveled. Both are related to the Department of Transportation's (DOTs) Highway Performance Monitoring System (HPMS).

3.4.1 Highway Performance Monitoring System

3.4.1.1 Role of the HPMS in SIP Development

EPA and DOT have both endorsed the Highway Performance Monitoring System (HPMS) as the appropriate source of VMT estimates. All states, except for the states of California, Connecticut, Florida, Hawaii, Maine, Michigan, Missouri, North Carolina, New York, Ohio, Oregon, South Carolina and Washington, should base their 1990 estimates of actual annual VMT on unique sample panels for each Federal Aid Urbanized Area (FAUA) within the state, since sampling has already occurred at that level of geographic detail.[148] The effect of this agreement is that the VMT used to construct mobile source emission inventories should be consistent with that reported through the HPMS. However, since the Federal Aid Urbanized Area geographic boundaries of HPMS are not generally coincident with EPA's non-attainment area boundaries, the two estimates of VMT will not necessarily be identical.

Ideally, the VMT in that portion of the non-attainment area that is encompassed by the FAUA should be the same as the VMT reported for that FAUA to the U.S. Department of Transportation. If a non-HPMS method used by the state does not achieve this goal, then an adjustment factor should be applied to the state-estimated VMT to make it match the HPMS report.

---

[148] In 1990, the states of California, Florida, Hawaii, Maine, Michigan, Missouri, North Carolina, Oregon, South Carolina, and Washington based HPMS VMT estimates on one or more collective sample panels while the states of Connecticut, New York, and Ohio based HPMS VMT estimates on a combination of individual and collective sample panels. In some of these states, such as California, the state reports area-specific VMT estimates to HPMS as if they were derived in the same way as in other states. EPA recognizes that such estimates may not be as reliable as estimates based on individual sample panels and therefore may allow the state to submit a 1990 SIP inventory based on VMT estimates that are not fully consistent with the data submitted to HPMS. EPA Regional Offices are advised not to agree that the HPMS data are less reliable than VMT estimates made by another state-requested method without consulting with divisional or regional FHWA officials who have direct knowledge of the HPMS data associated with the non-attainment area.

Consistency between HPMS VMT[149] and SIP VMT[150] means, in general, that the same factors used within the FAUA to seasonally adjust and expand the HPMS 24- and 48-hour traffic count samples by functional system and volume group to annual average daily traffic (AADT) VMT should also be applied to all segments within the non-attainment area. Similarly, whatever method is used to estimate VMT on local facilities within the state should also be applied to local facilities within the non-attainment area. Finally, consistency means that the SIP functional systems are identical to the HPMS functional systems.[151, 152]

Since the VOC, NOx, and summer CO emission inventories are typical summer day inventories, VMT for ozone non-attainment areas should be adjusted to the summer season using the inverse of the factors used to adjust summer 24- and 48-hour counts to AADT. Similarly, VMT for winter CO emission inventories should be adjusted using the same technique. Modeling inventories for particular days should also be adjusted for average day-of-week variations in VMT.

3.4.1.2 Overview of HPMS

Urban areas with populations over 50,000 are required to maintain formal transportation planning programs in order to meet Federal requirements for securing transportation funds. These programs are intended to establish the analytical basis for assessing current and future transportation needs and for evaluating projects that will satisfy those needs. Although not a requirement of this process, the Highway Performance Monitoring System can be very useful to it.

The Highway Performance Monitoring System was developed by the U.S. Department of Transportation Federal Highway Administration in the mid-1970s to collect and report information on the nation's highways. Traffic data reporting for the system is documented in the HPMS Field Manual[153] and the Traffic Monitoring Guide.[154]

---

[149] HPMS VMT refers to the vehicle miles traveled reported to the Federal Highway Administration's Highway Performance Monitoring System. Under this program, traffic counts taken on samples of an area's roadway network are adjusted for day-of-week and season and expanded to include the area's entire roadway network.

[150] SIP VMT refers to the vehicle miles traveled that is used to construct the mobile source emissions inventory.

[151] SIP functional systems and the VMT reported thereon may not be identical to those reported to the U.S. DOT, if the state demonstrates that HPMS data are sufficiently uncertain and the competing alternative proposed by the state is more accurate. Consult with divisional or regional FHWA officials who have direct knowledge of the HPMS data associated with the non-attainment area.

[152] Exceptions to these general guidelines are described in sections 3.4.1.3 and 3.4.2.4.

[153]

U.S.D.O.T.Code	Title
M 5600.1A	Highway Performance Monitoring System (HPMS) Field Manual
M 5600.1A, Chg. 1	Highway Performance Monitoring System (HPMS) Field Manual Updates
M 5600.1A, Chg. 2	
(Deleted by Chg. 3)	Highway Performance Monitoring System (HPMS) Field Manual
M 5600.1A, Chg. 3	Highway Performance Monitoring System (HPMS) Field Manual

[154] Traffic Monitoring Guide. June, 1985. U.S. Department of Transportation. Federal Highway Administration. Office of Highway Planning.

The HPMS universe consists of all public highways or roads within a state. The reporting strata for the HPMS include type of area (rural, small urban, and individual or collective urbanized areas) and functional class. In rural areas the functional classes are Interstate, Other Principal Arterial, Minor Arterial, Major Collector, and Minor Collector. In urban areas they are Interstate, Other Freeway or Expressway, Other Principal Arterial, Minor Arterial, and Collector. A third level of stratification based on 13 volume groups was added as a statistical device to reduce sample size, insure the inclusion of higher volume sections in the sample, and increase the precision of VMT at a lower sample rate.

The HPMS sample design is a stratified simple random sample. The sample size estimation process was tied to annual average daily traffic, although nearly 75 data items are collected. The decision for using AADT was based partly on the fact that AADT is one of the most variable data items in the HPMS. As such, the reliability of the other data is expected to equal or exceed that of AADT.

The HPMS sampling element was defined on the basis of road segments or links that include both directions of travel and all travel lanes within the section. AADT variability was estimated based on data from the 1976 National Highway Inventory and Performance Study (NHIPS). Sample size was determined and the sample selected as a simple random sample within strata according to predetermined levels of precision. For the higher volume strata the sample size is estimated on the basis of providing a 90% confidence that the sample strata mean was within $\pm$ 5% of the universe strata mean.

Typically 24- or 48-hour counts are taken on each sample segment once every three years. These short counts are adjusted, based on day-of-week and season, to annual averages using a small number of continuous traffic recorders. The HPMS expansion factors are computed as the ratio of universe mileage to sample mileage within each stratum.[155] This procedure expands the HPMS sample to represent the universe of all roadways in the area by multiplying each segment's AADT, segment length, and expansion factor and summing the product for each sample section. Axle correction factors are also incorporated into the process.[156] Growth factors are used to convert counts on sections unmonitored during a year to current year annual estimates, i.e., segments not counted during the year of record are estimated by multiplying the earlier counts by growth factors.

---

[155] Expansion factors for different FAUAs may be different, even within the same state.

[156] Vehicle counts taken by axle counting equipment require adjustment by axle correction factors. An adjustment factor is the ratio of vehicles to axles as determined by a vehicle classification count.

While a statistically valid sample design could be developed independently of the HPMS, the availability of the clearly defined and implemented HPMS sample design results in a significant reduction of effort. The HPMS sample has now been implemented in every State, the District of Columbia, and Puerto Rico. It provides a statistically valid, reliable, and consistent data base for analysis within States, between States, and for any aggregation of States up to the national level.

3.4.1.3 Consistency Between HPMS and SIP VMT

VMT used to construct mobile source emission inventories should be consistent with that reported through the HPMS. However, since the Federal Aid Urbanized Area geographic boundaries of HPMS are not generally coincident with EPA's non-attainment area boundaries, the two estimates of VMT will not necessarily be identical.

3.4.1.3.1 Expansion Factors

Consistency between HPMS VMT and SIP VMT means, in general, that the same factors used to seasonally adjust and expand the HPMS 24- and 48-hour samples by functional system and volume group to annual average daily traffic (AADT) VMT within the FAUA should also be applied to all segments within the non-attainment area.[157] This in effect assumes that all roads of a given functional system and volume group are used with equal intensity, allowing geographic allocation of total HPMS VMT within the non-attainment area based only on knowledge of roadway miles.

3.4.1.3.1.1 Non-Attainment Area the Same As the Federal Aid Urbanized Area

If the boundaries of the non-attainment area are coincident with the boundaries of the FAUA, then the SIP VMT and HPMS VMT should be identical for each functional system. This may require that state-estimated non-attainment area VMT be adjusted to make it equal the VMT reported to HPMS.

---

[157] There are three exceptions to this generality. In the first case, separate expansion factors may be available for functional systems in the rural portion of the non-attainment area outside of the FAUA, and they should be used for that area. In the second case, if a state uses a network model to spatially and/or temporally allocate HPMS VMT (adjusted to match the HPMS total) within a non-attainment area, then the model's assignment to different functional systems may prevail. In this second case, the model may show that intensity of use by functional system may be quite different from one traffic analysis zone to another. See sections 3.4.2.4.1 and 3.4.2.4.2. Third, this rule does not apply to any areas with weak HPMS data that have been set aside in favor of a competing alternative.

3.4.1.3.1.2 Non-Attainment Area Inside of the Federal Aid Urbanized Area

If the boundaries of the non-attainment area are entirely within the boundaries of the FAUA, then the FAUA VMT by HPMS functional system should be allocated to the non-attainment area (by HPMS functional system) on the basis of the number of roadway miles according to equation (3-7).[158]

$$VMT_{(SIP,\ f,\ v)} = (\text{Roadway Miles}_{(SIP,\ f,\ v)} / \text{Roadway Miles}_{(FAUA,\ f,\ v)}) \bullet VMT_{(FAUA,\ f,\ v)} \quad (3\text{-}7) \qquad (3\text{-}7)$$

where FAUA = Federal Aid Urbanized Area

SIP = SIP Non-Attainment Area

f = Interstate System, Other Freeways and Expressways, Other Principal Arterials, Minor Arterials, Collectors[159]

v = Volume Group[160]

$$VMT_{(SIP,\ f)} = \sum_{\text{all } v} VMT_{(SIP,\ f,\ v)}$$

3.4.1.3.1.3 Non-Attainment Area Outside of the Federal Aid Urbanized Area

If the non-attainment area is entirely outside the boundaries of all FAUAs within the state, states may use any reasonable method to estimate 1990 VMT on the separate functional systems within the non-attainment area.

---

[158] EPA will accept an adjustment based on total FAUA VMT and not require that separate adjustment factors be applied to make VMT identical for each functional system and volume group. if a state demonstrates that the more refined approach is infeasible. If a state elects this option. it should use equation (3-7a).

$$VMT_{(SIP)} = (\text{Roadway Miles}_{(SIP)} / \text{Roadway Miles}_{(FAUA)}) \bullet VMT_{(FAUA)} \qquad (3\text{-}7a)$$

[159] The functional systems listed are for an HPMS Urbanized Area. Rural areas classify highway facilities as interstates. other principal arterials. minor arterials. major collectors and minor collectors.

[160] Volume groups vary by geographic area and functional system. Appendix F from the HPMS Operations manual. included at the end of this report. is a listing of functional systems and volume groups within each HPMS geographic area.

However, the recommended method of estimating VMT in a completely rural non-attainment area is on the basis of the expansion factors used for the universe of rural samples within the state.[161] The recommended method of allocating VMT to this type of non-attainment area is described by equation (3-8).[162, 163]

$$VMT_{(SIP,\ f,\ v)} = (\text{Roadway Miles}_{(SIP,\ f,\ v)} \ / \ \text{Roadway Miles}_{(HPMS,\ f,\ v)}) \bullet VMT_{(HPMS,\ f,\ v)} \qquad (3\text{-}8)$$

where HPMS = HPMS Statewide Rural Area

SIP = SIP Non-Attainment Area

f = Functional System

v = Volume Group

$$VMT_{(SIP,\ f)} = \sum_{\text{all } v} VMT_{(SIP,\ f,\ v)}$$

3.4.1.3.1.4 Non-Attainment Area and Federal Aid Urbanized Area Crossover

If the boundaries of the non-attainment area are such that some of the non-attainment area is inside an FAUA and some of it lies outside of any FAUA, then VMT in that portion of the non-attainment area within the FAUA should be estimated by allocating HPMS FAUA VMT to the non-attainment area on the basis of equation (3-7),[164] (assuming that only some of the FAUA is in the non-attainment area; if all of it is, allocation is not necessary), while VMT in that portion outside of the FAUA should be estimated according to equation (3-8) and Section 3.4.1.3.1.3.

3.4.1.3.2 Local Functional System

Section 3.4.1.3.1.3 above applies only to VMT on functional systems designated collector and above. While HPMS includes state-provided estimates of VMT on the local functional system, these estimates are not now generally based on current ground counts at statistically representative sites. Instead, the estimates are based on a method chosen by the state in light of its own circumstances. States may continue to use the same method as they

---

[161] Within HPMS, all rural areas within the state are grouped into one sampling universe.

[162] Alternatively, a state may estimate VMT on the basis of another rural area similar in terms of land use, etc., based on equation 3-8.

[163] Other alternative methods of estimating VMT in this type of non-attainment area are discussed in section 3.4.1.6.

[164] If all of the FAUA is inside of the non-attainment area, equation 3-7 does not apply, since all FAUA VMT is included as part of the total non-attainment area VMT estimate.

have used in the past to estimate 1990 VMT on the local functional system within the FAUA, and they may also apply that method to the portion of the non-attainment area outside of the FAUA.[165] For example, local road VMT within the non-attainment area might be estimated as a simple percentage of all collector and higher VMT.

Proper estimation of actual travel on the local functional system is most important for areas subject to the highest ambient ozone and CO concentrations. However, increasing the accuracy of these estimates will require some lead time.

3.4.1.3.3 Seasonal Adjustment

HPMS-based annual average daily VMT should also be adjusted for seasonal effects. Since the VOC, NOx, and summer CO emission inventories are typical summer weekday inventories, VMT for ozone non-attainment areas should be adjusted to the summer season using the inverse of the factors used to adjust the 24- and 48-hour counts to AADT. Similarly, VMT for winter CO emission inventories should be adjusted using the same technique.[166]

3.4.1.3.4 Daily Adjustment

Since base year emission inventories must also be calculated for a typical day, a similar adjustment using the inverse of the factors used to adjust the 24- and 48-hour counts to AADT should be made to convert typical summer day VMT to typical summer weekday VMT and to convert typical winter day VMT to typical winter weekday VMT.[167]

3.4.1.4 Allocating VMT to Time of Day

It may also be necessary to allocate daily VMT to each hour of the day. This is commonly done for purposes of preparing emissions estimates for the photochemical grid models used in forecasting ozone concentrations.[168] The recommended method of

---

[165] A state may substitute, for the 1990 estimate of actual VMT accumulated on the local functional system, a methodology superior to that used for HPMS reporting in the past, provided that the substitution is reflected both in the required emission inventories and the attainment demonstrations. Similarly, if, after a state submits a required emission inventory or an attainment demonstration, it wishes to change the methodology it used to estimate VMT on the local functional system, it should re-submit its emission inventory and attainment demonstration using the same alternative methodology.

[166] Weather conditions may be too severe to take 24- or 48 hour traffic counts during the winter. In that case, it may be possible to use continuous monitors within the inventory area to adjust summer counts to winter levels. National VMT monthly profiles could also be used to make the adjustment.

[167] Modeling inventories for particular days can also be adjusted for average day-of-week variations in VMT.

[168] The Urban Airshed model and its associate emissions preprocessor is an example of such a model. EPA also maintains the Regional Oxidant Model, a mesoscale photochemical model providing coverage of the Northeastern United States.

apportioning daily VMT to specific hours is to use the state's continuous monitors available within the FAUA. If no such monitors exist within the non-attainment area being modeled, then the state may rely on other continuous monitors located in areas similar in geographic, land use, and demographic characteristics, or on those areas' final Airshed Emission Preprocessor profiles.[169]

3.4.1.5 Allocating VMT to Functional Systems

To be consistent with HPMS, the SIP functional systems should, with few exceptions, be identical to the HPMS functional systems (Interstate System, Other Freeways and Expressways, Other Principal Arterials, Minor Arterials, and Collectors).[170]

The recommended method for estimating VMT on each HPMS functional system within the non-attainment area is to follow the procedures outlined in Section 3.4.1.3; that is, to allocate VMT on the basis of roadway miles and functional class. The underlying assumption in this methodology is that VMT is generally a function of total roadway miles and that this relationship becomes stronger as individual types of highway facilities within specific areas are considered.

3.4.1.6 Estimating VMT in Rural and Small Urban Areas[171]

The general process of estimating VMT in rural and small urban areas involves the apportionment of statewide VMT to the county or other area for which mobile source emissions estimates are required. Statewide VMT data are tabulated by all state transportation agencies and reported to the Federal Highway Administration, which, in turn, annually publishes these and other similar data in Highway Statistics. Highway Statistics is based upon and consistent with HPMS.[172]

Central to the overall method of estimating VMT in rural and small urban areas is the development of apportioning factors, which, when applied to the statewide total, yield areawide VMT. Several options exist for apportioning VMT, such as roadway miles, motor

---

[169] The Airshed Emission Preprocessor System has a default profile that can be used.

[170] One exception is that the Interstate System and Other Freeways and Expressways may be combined into a single functional system. A second exception is that the Collector, Local, and Frontage Roads may be combined into a single functional system.

[171] If a state has the capability of reporting rural or small urban area VMT directly, the indirect methods described here for apportioning state-level VMT data to the applicable area are not appropriate.

[172] HPMS data submitted to FHWA on or before September 15th of the year following the year of record are included in Highway Statistics. FHWA therefore considers the data in Highway Statistics preliminary and subject to revision within the following twelve months.

vehicle registrations, population, and fuel sales.[173] The option selected will depend on the availability of the required data. A key component of this process is the assistance of state and county transportation engineers and planners who should be able to provide the best assessment of both data availability and quality.

Once the apportioning method has been developed, the resulting factors are applied to statewide VMT to produce estimates of areawide travel. Other data are applied to yield VMT by roadway classification and vehicle type.

Statewide VMT estimates are available directly from state transportation and highway agencies and from Table VM-2 in Highway Statistics (included here as Table 3-3). To provide the most accurate estimates of travel that occurred in 1990, the data contained in the 1991 edition of Highway Statistics should be used.

Areawide VMT is estimated by applying the allocation factor, F_f, to statewide VMT statistics obtained from the state transportation agency, or from Table 3-3, from Highway Statistics. Expressed as an equation, the estimated annual VMT occurring in the area is:

$$VMT_{(SIP,\ f)} = F_f \bullet VMT_{(State,\ f)} \qquad (3\text{-}9)$$

where $VMT_{(SIP,\ f)}$ = estimated annual areawide VMT;

F_f = the apportioning factor to be applied to statewide VMT to estimate areawide VMT for functional system f, derived from one of equations 3-10 through 3-13;

$VMT_{(State,\ f)}$ = total statewide VMT for functional system f, obtained from the state transportation agency or from Table 3-3.

In all instances except where the apportioning factor is based on roadway miles (equation 3-10), the value assigned to $VMT_{(State,f)}$ is found in the TOTAL column for ALL HIGHWAY CLASSES in Table 3-3. If equation 3-10 is used, the individual values of VMT for each roadway type in urban and rural areas in Table 3-3 are used for $VMT_{(State,f)}$. Four methods for apportioning statewide VMT to county or other subareas are presented below.

[173] The recommended method for apportioning VMT in a completely rural non-attainment area is by roadway miles.

ANNUAL VEHICLE-MILES OF TRAVEL - 1990[1]

BY STATE AND FUNCTIONAL SYSTEM

OFFICE OF HIGHWAY INFORMATION MANAGEMENT

(MILLIONS)

TABLE VM-2
SEPTEMBER 1991

STATE	RURAL							URBAN							TOTAL
	INTERSTATE	OTHER PRINCIPAL ARTERIAL	MINOR ARTERIAL	MAJOR COLLECTOR	MINOR COLLECTOR	LOCAL	TOTAL	INTERSTATE	OTHER FREEWAYS AND EXPRESSWAYS	OTHER PRINCIPAL ARTERIAL	MINOR ARTERIAL	COLLECTOR	LOCAL	TOTAL	
ALABAMA	4.444	4.599	3.943	4.712	1.162	3.736	22.586	3.651	337	6.708	3.627	1.950	4.588	19.761	42.347
ALASKA	690	17	476	492	143	458	2.276	419	-	658	156	147	325	1.703	3.979
ARIZONA	5.992	1.592	2.165	3.942	661	1.609	14.771	2.742	668	7.746	3.598	1.627	4.104	20.685	35.456
ARKANSAS	2.621	3.047	2.710	3.467	461	1.128	13.414	1.801	673	7.451	1.622	603	647	7.597	21.011
CALIFORNIA	14.732	13.636	9.612	11.172	3.380	2.383	64.923	61.287	39.668	63.989	32.989	11.645	14.247	204.003	268.926
COLORADO	3.498	2.485	1.598	2.425	1.170	633	11.709	3.472	1.833	6.318	2.236	985	1.625	15.469	27.178
CONNECTICUT	1.416	1.130	1.143	1.476	467	945	6.597	6.396	2.418	3.839	2.071	2.474	1.708	19.706	26.303
DELAWARE	-	1.114	598	647	78	487	2.924	928	9	1.260	499	339	589	3.624	6.548
DIST. OF COL.	-	-						464	443	1.092	731	331	346	3.407	3.407
FLORIDA	8.907	9.677	6.878	3.048	1.469	3.144	31.988	10.391	4.143	19.646	14.306	9.088	20.655	78.029	109.997
GEORGIA	8.809	6.128	7.128	6.224	1.975	4.417	33.681	9.812	1.691	8.733	7.403	3.675	7.761	39.065	72.746
HAWAII	102	96	1.214	613	132	663	2.810	1.401	798	885	641	479	1.052	5.256	8.066
IDAHO	1.484	1.479	581	1.162	220	1.905	6.831	618	-	863	862	317	358	3.018	9.849
ILLINOIS	7.468	4.678	5.230	5.046	495	3.325	26.139	13.712	940	16.380	12.381	8.677	7.105	57.195	83.334
INDIANA	6.540	4.124	5.590	8.749	1.855	2.433	29.391	6.279	923	8.942	6.239	1.696	4.227	24.306	53.697
IOWA	3.278	3.866	2.978	2.609	735	1.470	14.827	1.343	-	3.111	1.866	687	1.159	8.166	22.993
KANSAS	2.472	3.625	2.022	2.689	285	1.472	12.565	2.066	634	2.587	2.435	841	1.721	10.284	22.849
KENTUCKY	4.587	3.653	2.247	5.040	2.020	2.324	19.871	9.450	641	2.951	3.635	1.456	1.795	13.768	33.639
LOUISIANA	4.377	2.291	2.987	5.298	1.480	2.220	18.053	9.040	400	6.116	3.381	1.249	8.428	19.614	37.667
MAINE	1.708	1.644	1.662	2.098	712	1.006	8.730	449	101	1.136	790	420	245	3.141	11.871
MARYLAND	2.785	3.503	3.135	2.309	762	1.287	13.791	8.204	2.819	8.148	3.843	1.985	1.746	26.745	40.536
MASSACHUSETTS	2.084	1.473	1.966	1.581	372	1.034	8.509	10.347	4.461	9.378	5.310	2.877	5.248	37.621	46.130
MICHIGAN	5.850	6.386	8.060	10.176	1.624	2.642	32.538	11.114	3.677	15.010	11.156	3.748	3.948	48.553	81.091
MINNESOTA	2.988	4.837	3.401	3.806	1.122	2.677	18.730	4.780	2.170	2.921	5.126	2.667	2.652	20.216	38.948
MISSISSIPPI	2.665	3.008	3.245	3.488	385	3.913	16.702	1.209	97	2.521	1.253	833	1.783	7.698	24.398
MISSOURI	5.828	8.273	3.550	5.788	399	3.553	25.189	7.905	2.267	6.423	4.887	1.630	2.582	25.694	50.883
MONTANA	1.818	1.482	1.094	894	320	754	6.360	165	-	734	350	185	538	1.972	8.332
NEBRASKA	1.906	2.249	1.839	1.247	289	1.256	8.778	622	73	1.868	1.354	483	678	5.179	13.958
NEVADA	1.563	828	590	882	206	305	4.372	955	740	1.528	1.488	535	596	5.843	10.215
NEW HAMPSHIRE	1.359	1.079	1.485	1.269	414	542	6.148	673	462	1.014	962	330	255	3.696	9.844
NEW JERSEY	1.912	2.266	2.109	2.514	885	841	10.517	8.357	5.322	12.186	8.652	3.024	10.886	48.406	58.923
NEW MEXICO	3.486	1.634	1.193	1.153	266	2.013	9.725	1.068	35	2.798	949	477	1.096	6.423	16.148
NEW YORK	6.639	4.666	7.020	6.473	5.310	3.415	31.423	13.913	14.412	16.876	16.228	5.848	8.702	75.479	106.902
NORTH CAROLINA	6.403	5.751	3.327	11.168	9.779	3.358	33.776	3.708	2.313	9.036	6.561	1.194	7.117	28.929	62.707
NORTH DAKOTA	923	792	958	807	185	689	4.348	177	-	538	381	177	289	1.562	5.910
OHIO	8.044	4.992	8.718	8.717	2.091	8.066	35.628	16.591	3.357	10.971	7.028	4.196	10.280	51.344	86.972
OKLAHOMA	3.630	2.944	3.054	4.888	164	1.845	16.495	3.221	1.798	9.463	3.990	831	3.185	16.586	33.081
OREGON	3.811	3.914	2.080	2.905	628	1.501	14.639	2.732	979	3.272	2.801	1.307	1.008	12.099	26.738
PENNSYLVANIA	7.967	7.496	9.065	6.115	2.764	5.474	38.871	7.108	3.962	16.955	8.287	4.792	5.769	46.837	85.708
RHODE ISLAND	206	285	197	151	65	72	976	1.061	523	1.803	1.154	527	990	6.048	7.024
SOUTH CAROLINA	6.756	3.884	4.889	6.093	662	2.189	22.253	2.105	378	4.520	2.920	1.482	718	12.123	34.376
SOUTH DAKOTA	1.340	1.367	927	966	167	696	5.451	226	20	646	281	90	295	1.538	6.989
TENNESSEE	6.731	2.747	5.200	8.205	2.366	1.631	22.880	6.663	-	8.864	3.678	2.387	3.238	23.830	46.710
TEXAS	11.645	15.665	8.355	14.681	2.187	4.237	54.660	23.075	14.288	20.187	16.249	7.777	27.046	107.572	162.232
UTAH	2.300	949	821	858	755	608	5.691	2.696	146	1.631	1.885	969	1.829	8.955	14.646
VERMONT	998	652	852	1.079	182	479	4.250	238	54	456	308	172	360	1.588	5.838
VIRGINIA	7.061	5.271	5.588	6.408	492	3.239	28.059	8.052	1.994	7.743	6.739	2.143	5.454	32.119	60.178
WASHINGTON	3.536	3.156	2.160	5.081	1.650	1.174	18.764	7.268	2.464	7.204	5.493	2.429	3.073	27.931	44.695
WEST VIRGINIA	2.664	1.515	2.335	3.419	343	787	10.948	1.079	422	1.129	903	491	446	4.470	15.418
WISCONSIN	3.904	6.342	4.778	4.525	948	2.895	23.390	2.600	1.805	4.970	6.241	1.258	5.015	20.887	44.277
WYOMING	1.873	685	885	484	404	348	4.479	159	8	515	286	228	168	1.354	5.833
TOTAL	200.673	176.382	156.844	191.302	50.462	96.846	870.409	278.404	127.431	335.687	235.036	103.756	196.778	1.277.092	2.147.501
PERCENT - AREA	23.1	20.2	18.0	22.0	5.8	11.2	100.0	21.8	10.0	26.3	18.5	8.7	15.5	100.0	0.0
PERCENT - TOTAL	9.4	8.2	7.3	8.0	2.4	4.5	40.6	13.0	6.0	15.7	11.0	4.9	9.2	59.5	100.0

1/ DATA ARE BASED ON STATE HIGHWAY AGENCY ESTIMATES REPORTED FOR THE VARIOUS FUNCTIONAL SYSTEMS AND ARE SUBJECT TO REVISION PENDING FURTHER FEDERAL HIGHWAY ADMINISTRATION REVIEW.

Table 3-3

3.4.1.6.1 Apportionment of Statewide VMT-Recommended Method

The recommended method of allocating statewide VMT to rural or small urban areas is on the basis of roadway miles by functional class. The underlying assumption in this method is that VMT is generally a function of total roadway miles and that this relationship becomes stronger as individual types of highway facilities within specific areas are considered.

State transportation and highway agencies report total roadway miles by functional class (i.e., interstate, other freeways and expressways, other principal arterials, minor arterials, and collectors) in urbanized, small urban, and rural areas, for both the Federal-Aid and non-Federal-Aid portions of the highway system. A summary of these data is published by FHWA in Highway Statistics as Table HM-20, which is shown here as Table 3-4. As Tables 3-3 and 3-4 show, roadway miles and VMT are reported in exactly the same format, i.e., by functional class on Federal-Aid and non-Federal-Aid highways in both urban and rural portions of each state. The one additional set of data required is the areawide roadway miles disaggregated by the same categories as those for the statewide data. This information should be available directly from the state transportation agency, or it can be derived based on input from both state and county transportation agencies.

The VMT allocation factor is then derived as the ratio of areawide to state roadway miles for each category of highway in the applicable rural or small urban area:

$$F_f = \text{Roadway Miles}_{(SIP,\ f)} / \text{Roadway Miles}_{(State,\ f)} \qquad (3\text{-}10)$$

where F_f = the apportioning factor to be applied to statewide VMT to estimate areawide VMT for functional system f;

$\text{Roadway Miles}_{(SIP,\ f)}$ = roadway miles of functional system f in the area;

$\text{Roadway Miles}_{(State,f)}$ = roadway miles of functional system f in the state.

The result will be as many as 13 individual allocation factors in each area, each of which is applied to the corresponding VMT figure in Table 3-3 from Highway Statistics.

PUBLIC ROAD AND STREET MILEAGE - 1990[1]

BY FUNCTIONAL SYSTEM

MILEAGE AS OF DECEMBER 31, 1990
COMPILED FROM REPORTS OF STATE AUTHORITIES

TABLE HM-20
SEPTEMBER 1991

STATE	RURAL							URBAN							TOTAL MILEAGE
	INTERSTATE	OTHER PRINCIPAL ARTERIAL	MINOR ARTERIAL	MAJOR COLLECTOR	MINOR COLLECTOR	LOCAL	TOTAL	INTERSTATE	OTHER FREEWAYS AND EXPRESSWAYS	OTHER PRINCIPAL ARTERIAL	MINOR ARTERIAL	COLLECTOR	LOCAL	TOTAL	
ALABAMA	642	1,994	3,884	11,581	5,971	48,738	73,818	247	21	1,008	1,811	1,707	12,280	18,064	90,872
ALASKA	1,038	63	902	1,904	906	7,134	11,936	61	-	106	81	184	1,147	1,649	13,485
ARIZONA	1,038	1,037	2,181	3,744	3,088	26,876	36,945	130	39	993	1,010	1,860	10,845	14,887	51,832
ARKANSAS	419	1,931	3,167	12,460	6,530	44,911	69,408	123	105	835	996	1,008	4,812	7,877	77,285
CALIFORNIA	1,416	2,932	6,598	12,921	9,891	55,895	89,652	983	1,263	5,841	8,312	7,747	49,876	73,922	163,574
COLORADO	799	1,901	1,947	7,302	12,065	42,400	66,408	149	164	929	1,140	1,156	7,754	11,272	77,680
CONNECTICUT	109	226	472	960	1,137	5,182	9,086	232	191	710	949	1,818	6,907	10,805	19,991
DELAWARE	-	164	183	809	152	2,731	3,829	41	1	136	138	168	1,133	1,615	5,444
DIST. OF COL.	-	-	-	-	-	-	-	12	24	99	152	166	659	1,102	1,102
FLORIDA	1,010	2,678	3,409	4,686	5,195	43,073	60,051	416	269	1,835	2,406	4,780	38,229	48,034	108,085
GEORGIA	873	2,706	6,874	14,034	7,266	67,121	87,873	372	146	1,466	2,112	1,808	16,820	21,728	109,601
HAWAII	6	13	987	458	113	1,611	2,587	38	53	94	117	180	1,030	1,512	4,099
IDAHO	530	1,648	1,027	4,882	3,808	48,111	60,008	75	-	184	397	386	1,388	2,429	62,436
ILLINOIS	1,416	2,741	6,061	14,199	3,675	76,930	103,941	546	83	2,972	3,167	3,291	22,624	32,003	136,944
INDIANA	683	1,102	3,134	9,764	10,303	48,884	74,040	285	112	1,348	2,288	1,961	11,876	17,868	91,908
IOWA	846	3,153	4,880	13,687	18,399	86,101	103,766	137	-	921	1,286	1,047	6,598	8,788	112,641
KANSAS	712	3,260	4,465	22,728	9,321	83,997	124,473	160	90	577	1,038	770	6,470	9,105	133,578
KENTUCKY	578	1,638	1,756	7,215	9,272	41,618	61,976	184	90	497	1,094	902	4,926	7,692	69,668
LOUISIANA	658	1,084	1,576	7,952	4,308	31,358	46,330	188	28	1,018	1,111	1,148	8,799	12,280	58,620
MAINE	313	736	1,088	3,276	2,264	12,228	19,895	53	14	223	297	394	1,613	2,494	22,389
MARYLAND	169	499	1,142	1,911	1,893	10,848	16,462	231	191	891	958	1,174	8,845	12,290	28,752
MASSACHUSETTS	170	242	789	2,007	1,951	8,091	13,230	397	274	1,846	2,419	2,726	13,186	20,848	34,076
MICHIGAN	772	2,398	3,869	17,201	7,483	59,050	90,773	466	200	1,952	3,589	2,790	17,690	26,678	117,449
MINNESOTA	888	3,357	5,523	16,604	11,878	77,339	115,189	217	138	686	1,646	1,843	9,878	14,208	129,397
MISSISSIPPI	680	1,676	4,137	11,704	2,909	44,278	65,164	124	34	800	681	783	5,154	7,356	72,520
MISSOURI	841	2,762	3,708	18,102	5,430	74,847	105,488	338	270	1,039	1,627	1,487	10,270	15,039	120,527
MONTANA	1,144	2,102	3,312	8,581	9,261	46,626	69,116	47	-	171	211	228	1,618	2,271	71,387
NEBRASKA	444	2,719	4,212	11,458	9,233	59,365	87,461	97	10	375	537	406	3,588	4,962	92,403
NEVADA	498	809	1,178	2,328	2,456	35,371	42,440	46	36	172	342	432	2,056	3,084	45,524
NEW HAMPSHIRE	180	318	864	1,236	1,230	8,776	12,403	44	33	190	366	342	1,469	2,433	14,836
NEW JERSEY	126	279	648	1,734	1,264	7,711	11,760	270	289	1,366	2,888	1,919	16,800	22,602	34,262
NEW MEXICO	908	1,376	2,283	4,201	2,373	38,089	49,230	94	3	459	331	286	4,328	5,498	54,728
NEW YORK	854	1,788	4,630	6,293	10,799	48,965	73,329	846	762	2,407	4,168	3,943	25,997	37,913	111,242
NORTH CAROLINA	709	2,003	2,039	10,611	9,060	61,133	76,446	228	207	1,746	2,204	1,375	13,485	19,245	94,690
NORTH DAKOTA	530	1,207	4,198	11,107	7,488	60,176	84,708	40	-	165	270	228	1,120	1,811	86,517
OHIO	847	1,680	3,313	11,793	7,124	67,415	82,172	726	387	2,167	2,792	4,146	21,241	31,428	113,600
OKLAHOMA	729	1,679	3,220	21,409	9,092	69,359	99,682	207	189	782	1,863	1,208	7,836	12,083	111,765
OREGON	595	2,286	2,467	9,643	7,327	64,271	86,589	132	55	565	1,018	976	6,665	8,410	94,969
PENNSYLVANIA	1,166	1,788	6,968	7,980	8,376	62,888	88,164	403	384	2,015	2,822	3,191	18,729	28,344	116,508
RHODE ISLAND	21	74	92	201	153	982	1,523	49	64	348	291	498	3,338	4,588	6,111
SOUTH CAROLINA	673	1,519	3,437	8,634	4,004	36,636	54,703	118	34	689	896	1,159	6,447	9,343	64,046
SOUTH DAKOTA	631	2,318	3,387	11,498	6,986	48,163	72,962	47	3	170	232	114	1,168	1,734	74,696
TENNESSEE	780	1,059	4,168	5,464	10,782	47,046	69,299	282	-	1,325	970	1,811	10,952	15,340	84,639
TEXAS	2,282	7,903	5,914	37,937	18,526	143,614	217,176	947	826	3,944	5,584	8,883	70,592	88,776	305,951
UTAH	792	681	1,863	3,160	4,170	27,003	37,669	146	13	248	429	478	4,263	5,575	43,244
VERMONT	286	293	748	1,913	986	8,715	12,941	34	15	109	130	178	714	1,180	14,121
VIRGINIA	777	1,620	3,645	10,206	2,399	34,002	52,449	299	187	1,002	1,642	1,404	10,717	15,251	67,700
WASHINGTON	519	1,796	2,677	7,349	6,680	46,118	65,039	240	192	1,259	1,709	1,777	11,083	16,260	81,299
WEST VIRGINIA	427	512	1,728	8,362	2,161	20,336	31,516	90	70	216	328	404	1,968	3,076	34,592
WISCONSIN	518	3,289	5,068	13,742	5,606	66,360	95,481	124	156	1,056	1,906	1,427	9,726	14,396	109,876
WYOMING	869	1,023	2,098	2,485	7,456	23,339	37,281	50	3	187	200	320	1,212	1,952	39,213
TOTAL	33,547	83,802	144,735	438,365	293,912	2,130,427	3,122,788	11,627	7,670	51,987	74,656	78,248	533,276	757,383	3,880,161
PERCENT - AREA	1.1	2.7	4.6	14.0	9.4	68.2	100.0	1.5	1.0	6.9	9.9	10.3	70.4	100.0	-
PERCENT - TOTAL	0.9	2.2	3.8	11.3	7.6	54.7	80.5	0.3	0.2	1.3	1.9	2.0	13.8	19.5	100.0

Table 3-4

3.4.1.6.2 Apportionment of Statewide VMT-Alternative Methods

One of the remaining three apportioning methods may be used as an alternative to apportioning by roadway miles in rural counties if the state can demonstrate that the recommended method is either not feasible or less accurate than one of the alternative methods. Such might be the case in rural counties entirely outside of the non-attainment area but within a photochemical modeling domain.

3.4.1.6.2.1 Motor Vehicle Registrations

The first of these alternative methods utilizes motor vehicle registration data to derive an apportioning factor. The premise here is that the amount of travel occurring in an area is a function of the area's vehicle population. This method assumes that travel by vehicles registered outside the area is balanced by travel outside the area by vehicles registered in the area and that individual areawide travel patterns are not significantly different from the statewide average for the area in question.

The allocation factor is the ratio of areawide-registered vehicles to state-registered vehicles. Registration statistics can be obtained from the state Department of Motor Vehicles (DMV) for both the state and county, although there may be a requirement for special processing of state registration files to produce areawide-specific data. The factor is defined by:

$$F = V_{(Area)} / V_{(State)} \tag{3-11}$$

where F = the allocation factor to be applied to statewide VMT to derive areawide VMT;

$V_{(Area)}$ = total number of motor vehicles of all types registered in the area;

$V_{(State)}$ = total number of motor vehicles of all types registered in the state.

3.4.1.6.2.2 Population

A second alternative method for allocating statewide VMT apportions statewide VMT to the area based on the relative area and state population. This method has the advantage of utilizing data that are routinely available from several sources, such as the Bureau of Census and state and county agencies, and therefore VMT estimates can be developed with minimal effort. It is important to use 1990 data to allocate the travel in order to have a representative estimate of the travel that occurred in the base year of the emissions inventory. The apportioning factor is:

$$F = P_{(Area)} / P_{(State)} \tag{3-12}$$

where F = the allocation factor to be applied to statewide VMT to derive areawide VMT;

$P_{(Area)}$ = total population in the area;

$P_{(State)}$ = total population in the state.

3.4.1.6.2.3 Fuel Sales

Finally, statewide VMT can be apportioned to the area based on fuel sales data. An assumption inherent in this method is that VMT and fuel sales are directly related. In order for this method to be practical, areawide fuel sales data must be available. If such data are not available, one of the other methods will need to be used.

All states collect taxes on motor fuel sold within their boundaries, and formal records are maintained regarding both the fuel throughput and the revenue derived therefrom. Since these statistics are usually aggregated as state totals, special processing may be required to identify fuel sales by area. The data requirements should be discussed with appropriate officials in the state taxation or revenue agency.

As a minimum, total annual sales (gallons) of gasoline and diesel fuel in both the area and state are required. The monthly distribution of sales is also required. Note that each state reports monthly fuel sales data to the Federal Highway Administration, which, in turn, reports various fuel use statistics in Highway Statistics and in a monthly publication by FHWA entitled Motor Fuel Consumption Reports (MF26G).

The apportioning factor is the ratio of areawide motor fuel use to state fuel use. Tables MF-25 and MF-26, respectively, in Highway Statistics tabulate the monthly highway use of special fuels and gasoline for each state in the U. S. These tables are included here as Tables 3-5 and 3-6. Special fuels are essentially diesel fuel and some liquified petroleum gases. Table MF-26 indicates the actual use of gasoline and gasohol by highway vehicles; the data shown in that table have been adjusted to account for handling losses and exclude gasoline used for non-highway purposes. The VMT apportioning factor is:

$$F = G_{(Area)} / G_{(State)} \tag{3-13}$$

where F = the allocation factor to be applied to statewide VMT to derive areawide VMT;

$G_{(Area)}$ = total quantity (gallons) of gasoline and diesel fuel sold in the area, obtained from the state revenue agency;

$G_{(State)}$ = total quantity (gallons) of gasoline and diesel fuel sold in the state, obtained from the state revenue agency or from Tables MF-25 and MF-26 in Highway Statistics.

PRIVATE AND COMMERCIAL HIGHWAY USE OF SPECIAL FUELS BY MONTHS - 1990 [1]

COMPILED FOR THE CALENDAR YEAR FROM AN ANALYSIS OF MOTOR-FUEL USE

(THOUSANDS OF GALLONS)

TABLE MF-26
OCTOBER 1991

STATE	JANUARY	FEBRUARY	MARCH	APRIL	MAY	JUNE	JULY	AUGUST	SEPTEMBER	OCTOBER	NOVEMBER	DECEMBER	TOTAL 2/	CHANGE FROM 1989 GALLONS	CHANGE FROM 1989 PER-CENT
ALABAMA	43.232	41.290	49.885	48.468	50.484	60.085	52.027	51.341	46.087	47.116	45.801	46.260	571.081	34.855	6.7
ALASKA	6.871	5.546	6.860	7.141	7.894	8.058	8.270	8.202	7.968	7.226	5.867	6.022	83.624	35.052	62.0
ARIZONA	27.149	26.963	29.100	27.230	28.009	28.009	27.876	28.885	26.761	26.439	26.610	28.082	331.071	5.377	1.7
ARKANSAS	29.205	21.685	32.369	32.766	34.568	34.376	36.260	34.414	31.173	33.025	31.658	29.614	386.802	-438	-0.1
CALIFORNIA	140.057	133.388	159.896	158.918	162.844	162.103	168.958	171.183	164.322	151.308	142.551	149.135	1.852.810	-91.721	-4.7
COLORADO	15.810	14.539	18.889	18.042	18.188	18.704	19.405	19.817	17.778	17.498	15.531	15.589	208.215	18.600	9.9
CONNECTICUT	13.965	13.220	15.194	18.698	18.398	18.404	18.739	17.241	15.820	15.864	14.868	14.710	188.187	-13.813	-6.8
DELAWARE	3.715	3.526	4.128	4.228	4.725	5.948	6.487	6.380	6.882	4.458	4.128	3.887	53.255	-210	-0.4
DIST. OF COL.	1.664	2.044	1.933	1.743	1.944	2.038	1.870	1.782	2.040	2.177	1.871	2.027	22.818	-538	-2.3
FLORIDA	70.788	87.582	77.972	75.868	71.474	69.702	89.535	89.871	68.481	68.686	69.267	69.702	843.848	-16.144	-1.8
GEORGIA	66.824	59.072	70.178	74.886	76.421	75.760	78.284	80.412	73.752	74.078	68.981	69.221	887.438	18.703	2.3
HAWAII	2.095	1.814	2.169	2.182	2.264	2.239	2.344	2.286	2.097	2.189	2.027	2.120	26.785	1.208	4.9
IDAHO	8.848	8.817	10.484	10.708	11.387	11.759	12.794	12.490	11.477	10.900	9.895	9.015	128.235	15.101	13.3
ILLINOIS	83.439	77.864	81.523	91.652	95.375	96.251	99.765	101.723	91.671	93.294	87.162	85.391	1.095.000	85.884	8.8
INDIANA	53.204	48.794	59.854	60.583	64.280	66.060	67.895	65.185	61.154	62.514	59.172	58.119	728.926	-9.709	-1.3
IOWA	24.384	22.768	27.239	28.867	31.222	31.447	36.112	32.657	29.308	29.907	27.677	25.248	375.714	22.790	6.5
KANSAS	20.917	19.127	23.356	24.162	26.079	28.038	34.388	28.318	23.888	24.488	23.170	22.393	314.060	5.561	1.8
KENTUCKY	38.430	38.234	41.180	42.404	44.021	43.285	43.383	43.673	40.200	41.571	38.144	38.927	488.852	-25.785	-5.0
LOUISIANA	31.318	29.443	32.777	32.899	33.856	32.640	32.777	32.888	30.080	30.286	28.367	27.670	374.596	-247	-0.1
MAINE	7.874	7.862	9.968	9.334	9.935	10.414	10.347	11.082	8.888	9.155	7.669	9.501	111.379	-12.202	-9.9
MARYLAND	26.876	25.221	29.445	30.284	31.690	31.074	32.561	32.387	29.052	30.010	28.769	27.682	364.729	-674	-0.2
MASSACHUSETTS	19.737	17.960	21.541	21.488	22.826	23.951	24.678	24.688	22.248	22.091	20.764	20.309	262.061	-28.632	-9.8
MICHIGAN	59.824	58.242	45.619	45.840	47.147	48.109	48.966	50.408	46.971	46.346	43.469	40.619	634.640	-922	-0.2
MINNESOTA	24.720	23.048	26.460	27.383	29.671	30.407	31.846	31.710	28.534	28.989	26.393	25.690	334.810	-1.040	-0.3
MISSISSIPPI	22.196	22.098	27.811	26.334	29.453	30.077	32.407	31.226	28.157	28.534	27.088	24.867	320.349	7.168	2.2
MISSOURI	45.564	40.413	47.841	48.506	53.249	54.260	56.687	55.508	50.813	52.298	47.486	43.978	534.302	-54.974	-8.5
MONTANA	8.874	9.180	9.584	10.191	11.181	12.121	12.985	12.875	11.081	10.579	9.489	8.440	125.346	4.428	3.7
NEBRASKA	15.706	14.428	17.801	18.085	20.134	20.619	21.741	21.346	19.788	18.724	18.030	15.301	220.244	9.817	4.7
NEVADA	10.016	9.144	10.835	10.798	10.954	11.720	12.434	12.724	10.650	11.615	10.808	10.439	132.138	2.178	1.7
NEW HAMPSHIRE	3.086	3.677	4.141	4.099	4.498	4.700	4.881	5.195	4.477	4.462	3.834	3.829	51.759	-8.507	-14.1
NEW JERSEY	33.083	30.288	35.700	34.585	36.707	36.714	38.926	37.868	36.193	38.461	34.990	33.630	422.488	-32.973	-7.2
NEW MEXICO	17.277	16.097	19.947	17.767	19.469	19.748	19.837	20.326	17.878	19.783	17.633	17.877	222.638	14.283	6.8
NEW YORK 3/	83.872	58.714	69.803	69.645	78.680	76.381	80.206	82.268	72.488	76.133	68.170	67.386	859.646	145.006	20.6
NORTH CAROLINA	48.398	47.201	52.180	54.049	55.486	55.863	54.984	56.617	50.967	54.294	48.770	47.892	627.615	6.915	1.0
NORTH DAKOTA	6.619	6.783	8.884	7.394	8.717	8.782	9.126	9.181	8.242	8.326	7.279	6.789	99.126	-303	-0.3
OHIO	73.137	69.808	81.821	79.891	82.014	84.428	87.614	89.249	80.374	82.110	77.768	78.068	964.888	-85.782	-8.2
OKLAHOMA	31.298	29.220	34.371	34.165	36.844	37.133	37.295	35.878	33.423	34.680	34.330	32.764	412.127	19.863	5.2
OREGON 4/	23.082	21.498	27.929	27.997	29.828	31.363	33.318	32.708	30.505	28.676	28.777	24.088	330.850	23.416	7.4
PENNSYLVANIA	88.841	85.680	78.859	77.612	81.830	81.424	83.764	86.082	78.723	82.170	76.207	72.388	931.830	4.924	0.5
RHODE ISLAND	2.613	2.837	3.270	3.362	3.874	3.728	4.001	3.881	3.458	3.430	3.185	3.172	40.827	-12.594	-23.8
SOUTH CAROLINA	36.884	31.021	38.599	38.758	38.725	35.473	37.909	38.879	36.416	35.303	33.430	33.007	422.825	14.534	3.6
SOUTH DAKOTA	6.811	5.327	7.285	7.881	9.233	10.231	10.978	10.888	8.738	8.082	7.418	6.831	100.902	7.135	7.8
TENNESSEE	48.887	42.856	48.381	51.013	54.770	57.730	55.134	57.322	49.724	50.897	51.244	49.238	607.076	17.586	3.0
TEXAS	114.556	108.822	126.083	121.232	124.080	121.860	128.228	126.784	115.384	114.243	115.069	113.673	1.428.255	-4.308	-0.3
UTAH	13.678	12.918	15.053	14.818	15.606	15.876	16.601	16.808	15.481	16.506	14.420	14.209	180.927	18.987	11.7
VERMONT	3.135	2.967	3.298	3.277	3.603	3.782	3.842	4.062	3.641	3.686	3.227	3.202	41.861	-4.895	-10.5
VIRGINIA	41.890	39.126	46.123	46.341	48.066	49.374	49.518	50.817	46.777	44.741	42.944	43.643	544.983	-31.588	-5.5
WASHINGTON	27.118	24.485	30.786	29.841	32.092	32.491	34.839	36.092	31.729	29.587	28.824	28.428	383.020	-1.626	-0.4
WEST VIRGINIA	14.520	13.840	16.824	16.429	17.055	16.930	17.123	17.412	16.626	16.362	15.175	15.281	192.825	12.313	6.8
WISCONSIN	30.748	28.798	33.854	35.231	40.242	40.884	43.525	43.393	39.533	38.023	36.028	32.612	443.895	10.738	2.6
WYOMING	11.389	10.660	13.897	13.625	15.834	17.318	18.210	19.122	16.029	14.898	12.812	11.929	178.724	6.902	4.1
TOTAL	1.811.708	1.617.583	1.780.358	1.788.583	1.878.940	1.888.895	2.011.140	1.971.159	1.787.098	1.805.893	1.598.491	1.865.155	21.398.804	124.218	0.6
PERCENTAGE	7.53	7.08	8.32	8.35	8.78	8.83	9.40	9.21	8.33	8.44	7.84	7.78	100.00	-	-

1/ THIS TABLE IS ONE OF A SERIES (MF-21 THROUGH MF-26) GIVING AN ANALYSIS OF MOTOR-FUEL CONSUMPTION BASED ON REPORTS FROM STATE MOTOR-FUEL TAX AGENCIES. SPECIAL FUELS AS SHOWN IN TABLE MF-26 CONSIST PRIMARILY OF DIESEL FUEL WITH SMALL AMOUNTS OF LIQUEFIED PETROLEUM GASES. HIGHWAY USE OF SPECIAL FUELS IS REPORTED BY THE STATES. IN ORDER TO APPROXIMATE ACTUAL USE, THE MONTHLY DISTRIBUTIONS ARE ESTIMATED BY THE FEDERAL HIGHWAY ADMINISTRATION USING TRAVEL DATA.

2/ FOR SOME STATES, DATA ARE NOT COMPARABLE TO PRIOR YEARS DUE TO CHANGES IN DATA ANALYSIS AND/OR IMPROVEMENTS IN REPORTING PROCEDURES.

3/ PRELIMINARY DATA.

4/ VEHICLES CONSUMING SPECIAL FUELS AND PAYING MILEAGE TAX TO THE PUBLIC UTILITY COMMISSIONER ARE NOT REQUIRED TO PAY THE GALLONAGE TAX. GALLONAGE REPORTED HERE INCLUDES MOTOR FUEL CONSUMED BY VEHICLES THAT PAY THE MILEAGE TAX. THIS GALLONAGE IS ESTIMATED BY THE STATE.

Table 3-6

HIGHWAY USE OF GASOLINE BY MONTHS - 1990[1]

COMPILED FOR THE CALENDAR YEAR
FROM AN ANALYSIS OF MOTOR-FUEL USE

(THOUSANDS OF GALLONS)

TABLE MF-28
OCTOBER 1991

STATE	JANUARY	FEBRUARY	MARCH	APRIL	MAY	JUNE	JULY	AUGUST	SEPTEMBER	OCTOBER	NOVEMBER	DECEMBER	TOTAL 2/	CHANGE FROM 1989 GALLONS	CHANGE FROM 1989 PER-CENT
ALABAMA	166.430	148.455	176.784	174.326	181.514	180.078	187.057	184.693	185.703	189.399	184.877	188.919	2.053.919	-3.967	-0.2
ALASKA	16.035	15.113	18.774	20.191	21.728	22.813	23.378	23.190	20.805	20.427	16.872	17.027	238.161	34.011	16.8
ARIZONA	134.303	130.373	143.968	134.959	138.561	138.561	137.907	141.609	132.337	140.691	131.191	133.485	1.637.848	-81.847	-3.8
ARKANSAS	91.129	86.072	101.000	102.203	107.861	107.260	110.031	107.379	97.268	103.046	98.471	92.091	1.203.811	-16.946	-1.4
CALIFORNIA	988.289	922.180	1.104.054	1.084.842	1.125.828	1.120.705	1.168.094	1.183.464	1.058.911	1.048.418	988.220	1.031.048	12.808.053	-168.016	-1.3
COLORADO	112.829	105.079	122.070	120.281	131.460	135.186	140.254	143.234	126.479	126.094	112.978	112.531	1.490.476	11.481	0.8
CONNECTICUT	97.628	92.422	108.220	109.735	114.651	114.681	117.024	120.641	111.296	110.906	103.876	102.036	1.301.715	-43.941	-3.3
DELAWARE	23.173	22.010	25.767	26.399	29.490	30.888	34.246	33.560	29.225	27.829	25.767	24.104	332.478	-3.878	-1.2
DIST. OF COL.	11.271	14.830	14.019	12.845	14.102	14.780	12.116	12.927	14.797	15.790	13.572	14.884	165.513	-8.953	-5.1
FLORIDA	489.195	457.039	536.768	509.020	493.860	481.815	480.449	462.781	458.875	475.785	471.703	481.816	5.830.693	9.978	0.2
GEORGIA	257.440	235.326	279.558	297.525	304.438	305.818	315.839	320.333	293.724	295.105	274.718	275.765	3.455.575	-10.139	-0.3
HAWAII	28.474	25.778	30.206	30.242	31.642	31.325	32.769	31.975	29.340	30.206	28.388	29.565	360.888	-2.600	-0.7
IDAHO	32.078	31.242	37.936	38.819	41.283	42.531	46.186	45.281	41.808	39.516	35.857	32.882	464.899	20.358	4.8
ILLINOIS	380.026	362.665	424.890	426.217	449.531	447.605	463.900	473.088	427.238	433.855	405.340	396.174	5.092.208	258.948	5.4
INDIANA	189.774	177.348	209.968	215.684	228.889	231.718	241.813	242.852	217.738	222.654	210.745	199.871	2.589.010	19.209	0.7
IOWA	84.135	78.681	93.988	98.914	107.729	108.507	224.662	113.304	101.117	103.192	95.155	87.117	1.298.381	-17.379	-1.3
KANSAS	76.828	71.898	87.719	90.788	97.836	97.872	204.361	98.934	89.490	91.969	87.128	84.177	1.180.600	-45.214	-3.7
KENTUCKY	132.426	131.713	149.890	154.140	160.012	157.344	157.700	159.480	146.131	151.115	138.855	141.603	1.779.908	-12.328	-0.7
LOUISIANA	149.721	140.768	158.705	157.242	161.897	165.810	158.705	155.158	143.811	144.705	135.572	131.812	1.790.914	-121.427	-6.3
MAINE	40.855	40.740	46.540	48.426	51.545	54.030	53.684	57.498	46.518	47.501	39.257	49.291	577.864	702	0.1
MARYLAND	147.770	139.714	163.097	167.813	176.856	172.137	178.211	179.407	160.938	168.241	159.983	152.683	1.985.028	-68.676	-3.3
MASSACHUSETTS	175.705	159.911	181.892	191.426	203.331	213.370	218.038	219.904	198.198	196.795	184.890	180.920	2.334.458	-85.045	-3.6
MICHIGAN	308.730	280.988	338.153	340.839	365.504	372.983	379.593	390.703	356.367	359.288	338.910	314.118	4.144.034	-42.139	-1.0
MINNESOTA	138.383	129.020	148.120	153.178	165.535	170.216	177.144	177.520	159.730	162.164	147.745	143.814	1.872.567	-81.830	-4.2
MISSISSIPPI	60.865	60.528	101.348	95.981	107.328	109.601	118.097	113.789	95.243	103.977	98.713	91.058	1.198.522	4.867	0.4
MISSOURI	195.979	182.558	215.114	223.631	240.545	245.108	251.015	250.748	229.537	236.249	214.503	198.684	2.684.847	25.812	1.0
MONTANA	28.422	26.738	31.338	33.391	38.838	39.718	42.550	42.181	36.307	34.865	31.091	27.803	410.718	2.412	0.8
NEBRASKA	52.748	48.457	59.110	60.738	67.818	69.245	73.019	71.667	63.032	62.864	55.621	54.746	738.805	7.087	1.0
NEVADA	47.631	43.992	51.418	51.230	51.983	55.820	59.008	60.384	50.541	55.118	51.283	49.537	627.053	17.028	2.8
NEW HAMPSHIRE	38.868	34.101	39.480	39.086	42.888	44.810	46.538	49.550	42.688	42.540	37.608	37.457	493.509	-20.868	-4.1
NEW JERSEY	282.567	240.088	276.760	287.907	280.880	284.610	286.248	283.461	272.819	282.844	268.597	260.701	3.276.142	-117.231	-3.5
NEW MEXICO	60.306	58.187	67.533	62.016	67.921	68.932	68.243	70.958	62.404	69.087	60.849	61.705	777.137	-7.404	-0.9
NEW YORK 3/	432.348	397.434	472.499	470.763	519.061	510.322	542.908	558.873	490.538	508.878	481.443	458.206	5.818.961	278.034	5.0
NORTH CAROLINA	252.597	241.459	286.825	278.457	283.943	285.789	281.274	289.622	260.724	277.742	249.487	244.981	3.210.880	-5.830	-0.2
NORTH DAKOTA	21.707	19.256	23.258	24.822	29.025	29.242	30.390	30.609	27.444	27.724	24.219	22.606	310.104	-9.066	-2.8
OHIO	350.571	326.371	382.195	382.946	393.120	404.682	418.482	427.807	386.267	393.583	372.771	374.158	4.824.942	-112.984	-2.4
OKLAHOMA	122.765	114.819	136.063	134.253	144.779	145.912	148.559	144.132	131.938	138.188	134.901	128.747	1.619.454	27.965	1.8
OREGON	92.825	84.994	108.414	108.878	115.780	121.701	129.332	126.964	118.412	111.908	103.940	93.548	1.315.692	-2.401	-0.2
PENNSYLVANIA	333.370	317.602	371.683	374.018	395.990	393.738	404.999	416.283	380.872	397.341	368.509	350.038	4.505.001	-49.639	-1.1
RHODE ISLAND	24.856	25.072	28.988	29.817	32.488	32.936	35.364	34.379	30.565	30.375	28.138	28.030	380.748	-5.619	-1.5
SOUTH CAROLINA	129.142	129.672	152.992	153.699	153.522	152.482	158.489	159.175	148.046	151.758	138.742	137.878	1.768.862	48.648	2.9
SOUTH DAKOTA	24.178	22.458	25.881	28.353	32.774	36.321	38.871	39.005	31.019	28.691	26.327	24.248	368.187	-909	-0.3
TENNESSEE	188.483	170.620	184.548	206.688	217.928	205.833	219.978	228.088	197.861	201.721	203.898	195.816	2.418.720	-78.453	-3.1
TEXAS	681.290	650.880	741.304	718.482	735.388	721.018	742.150	746.534	683.828	677.064	682.135	673.682	8.462.793	122.185	1.6
UTAH	52.870	49.932	58.184	57.276	59.933	61.761	63.779	64.967	58.723	59.933	55.737	55.247	699.931	-24.054	-3.3
VERMONT	21.251	19.799	22.005	21.865	24.044	25.105	28.306	27.028	24.296	24.858	21.530	21.362	279.248	8.788	3.2
VIRGINIA	224.778	210.988	243.290	244.485	269.158	266.208	285.915	272.380	245.818	241.233	226.904	234.788	2.938.282	-11.973	-0.4
WASHINGTON	168.863	150.367	189.185	183.385	197.218	189.671	212.833	215.288	194.985	181.823	177.138	182.414	2.230.958	-7.682	-0.3
WEST VIRGINIA	81.258	58.979	67.602	69.310	71.995	71.425	72.239	73.468	69.717	88.984	84.023	84.611	813.499	8.565	1.1
WISCONSIN	139.262	130.420	153.329	159.759	182.266	186.080	187.136	198.534	178.061	175.838	163.176	147.701	2.009.548	-5.070	-0.3
WYOMING	18.207	18.853	22.367	21.785	25.294	27.884	30.885	30.543	25.804	23.787	20.467	19.054	282.290	-16.145	-5.4
TOTAL	8.353.215	7.881.983	9.219.283	9.206.625	9.887.828	9.702.381	10.228.015	10.131.097	9.178.100	9.288.198	8.747.565	8.812.052	110.184.150	-358.478	-0.3
PERCENTAGE	7.58	7.14	8.38	8.38	8.77	8.80	9.28	9.19	8.33	8.43	7.94	7.82	100.00	-	-

1/ THIS TABLE IS ONE OF A SERIES (MF-21 THROUGH MF-28) GIVING AN ANALYSIS OF MOTOR-FUEL CONSUMPTION BASED ON REPORTS FROM STATE MOTOR-FUEL TAX AGENCIES. HIGHWAY USE OF GASOLINE WAS ESTIMATED BY THE FEDERAL HIGHWAY ADMINISTRATION (FHWA) BY SUBTRACTING NONHIGHWAY USE FROM TOTAL USE. IN ORDER TO MAKE THE DATA UNIFORM AND COMPLETE, NONHIGHWAY USES OF GASOLINE WERE ESTIMATED BY FHWA OR DATA WERE OBTAINED FROM OTHER SOURCES. THE RESULTING GALLONAGES DIFFER IN MANY INSTANCES FROM THE UNADJUSTED DATA RECORDED IN TABLE MF-2. IN ORDER TO APPROXIMATE ACTUAL USE, THE MONTHLY DISTRIBUTIONS WERE ESTIMATED BY FHWA USING TRAVEL DATA. THE ENTRIES IN TABLE MF-28 WILL NOT AGREE WITH THOSE IN TABLE MF-330A. TABLE MF-28 SHOWS HIGHWAY USE ONLY WHILE TABLE MF-330A REFLECTS GROSS GALLONS OF GASOLINE REPORTED BY WHOLESALE DISTRIBUTORS TO THE STATE TAXING AGENCIES EACH MONTH. GASOHOL IS INCLUDED WITH GASOLINE.

2/ FOR SOME STATES, DATA ARE NOT COMPARABLE TO PRIOR YEARS DUE TO CHANGES IN DATA ANALYSIS AND/OR IMPROVEMENTS IN REPORTING PROCEDURES.

3/ PRELIMINARY DATA.

3.4.2 Travel Demand Network Models

3.4.2.1 Role of Transportation Models in SIP Development

A common and highly useful information source for the preparation of the baseline inventory is a transportation planning model run configured to the same base year (1990). With this tool one is able to combine the appropriate travel estimates with emission factors developed by MOBILE4.1 to prepare an estimate of the emissions inventory. In addition, network model results can be used to develop certain critical inputs to the emission factor program. These include speeds, vehicles' operating conditions, trip starts, trip ends, number of trips per day per vehicle, and vehicle mix. In addition, network models can be used to spatially and temporally allocate VMT, and therefore emissions, within the non-attainment area. However, since EPA and DOT have both endorsed the Highway Performance Monitoring System as the most appropriate means by which to measure VMT, the VMT estimates produced by the transportation planning process should be made consistent with HPMS. The mechanism for making this adjustment is discussed in Section 3.4.2.4.

The initial development of new transportation planning model runs for both a base and a future year can take a substantial effort, especially for a large urban area. EPA recognizes that, generally, local air quality agencies do not operate the transportation planning models themselves and that they must work with the agencies responsible for the operation of such models.

3.4.2.2 Background

An important element of the transportation planning process is an assessment of the regional highway network. An extensive effort is required to collect and integrate the information needed to assess how the network is currently used and where growth will occur in the future. The mathematical models used to assess the effects of growth on the highway network allow the transportation analyst to evaluate the improvements that are needed and when they should be constructed. From the perspective of air quality, important products of these models are estimates of VMT and speed on each of the links coded into the highway network.

Basic requirements of the transportation planning process are an understanding of where travel occurs, what factors stimulate it, and how demand is satisfied. The Federal Highway Administration and the Federal Transit Administration (FTA)[174] developed a series of models to help communities satisfy these requirements. Historically, the most frequently used model has been the Urban Transportation Planning System (UTPS).[175] In recent years

---

[174] The Federal Transit Administration was formerly the Urban Mass Transit Administration (UMTA).

[175] Supplement 1 to "Methodology to Calculate Emission Factors for On-Road Motor Vehicles". California Air Resources Board. Technical Support Division. January 1988.

many variations of the UTPS have been developed in the private sector as Federal funding for the model decreased and sufficiently powerful microcomputers became available.[176]

Responsibility for implementing and operating transportation planning models generally falls into two categories: metropolitan planning organizations and state Departments of Transportation. In some cases, transportation or planning agencies within communities operate the models. Responsibility for operating the models generally falls outside of the jurisdiction of the air quality planning agency. Thus, the development of an emissions inventory for an urban area requires a cooperative effort between the air quality agency and the relevant transportation planning agency (the one operating the UTPS-type model). This should not come as a surprise to most communities, since a cooperative effort between the two types of agencies was required to develop the SIP inventories in 1979 and 1982.

Despite the fact that air quality planners are not responsible for operating the highway network models, it is important that they have an understanding of the principles guiding the operation of the models and the information that they generate. Section 3.4.2.3 provides an overview of UTPS-type operation and outputs. It is not designed to supplant the need to have a transportation planner actively involved in both generating and assessing the travel information used to prepare a highway emissions inventory estimate but does provide an introduction to the transportation planning process.

3.4.2.3 Overview of Network Models

UTPS-type models consist of manual and computerized planning procedures that provide decision-makers with information on long-range transit and roadway travel patterns. UTPS-type computer-based packages allow planners to simulate the operation of a transportation system to determine what would happen if population and economic activity increased and/or if changes were made in either the roadway or transit networks. When population, economic activity, and roadway and transit network inputs are matched to historical conditions, an estimate of VMT for that year is produced. The estimate, however, is based on many assumptions and estimates, not on direct observation of travel in that year. UTPS-type computer packages consist of a number of programs that parallel steps in the transportation planning process. In general, this process involves the following major steps:

- Representation of the roadway or transit system;
- Estimation of the number of current and future drivers and transit riders, the numbers of trips of various types they will choose to take in a typical day, and their trip origins and destinations;
- Assignment of trips to appropriate roads and transit routes; and
- Preparation of maps, tables and graphs to display results and compare different transportation alternatives.

[176] UTPS as a computer system is no longer supported by either FHWA or FTA. However, although some of the conventions used by UTPS may not be identical to those used by the other UTPS-type programs, they are similar, since, generally, UTPS served as the prototype for these other programs.

The capabilities of a UTPS-type package include estimation of the impacts of long-range land development, transportation system costs, travel demand, and major facility and corridor travel volumes. The package has been characterized as "data hungry". For most applications, planners must prepare a description of the roadway and/or transit networks as well as detailed demographic and economic forecasts. In addition, policy makers must agree on transportation alternatives to be tested and identify the impacts about which they are interested. Depending on the complexity of problems to be addressed, the availability of raw data, and the experience of the analytical staff, preparing initial inputs for a UTPS-type model can take from two months to over two years. The following discussion provides a more detailed overview of steps involved in configuring a UTPS-type package to a community.

The development of a realistic abstraction of the existing highway and/or transit network is the most time-consuming step required to implement a UTPS-type package. A network[177] describes the characteristics of roads or transit lines to the computer in the same way a map describes roads to a driver. The first step in network coding is the development of the zone system.

Zones are geographic areas dividing the study area into relatively homogeneous areas of land use, land activity, and aggregate travel demand. Zones represent the origins and destinations of travel activity within the study area. Since it is not computationally feasible to represent every household, place of employment, shopping center, and other activity as a separate origin and destination, these entities are first aggregated into zones and then further compressed into a single node. A centroid is a point that represents all travel origins and destinations in a zone. Typically in the highway network, these centroids are connected to the highway system at several points to represent the many paths over which each of the discrete origins and destinations within a zone access the balance of the highway system.

Once the zone system is developed and mapped, zonal socioeconomic data can be assembled for the transportation planning process. Zone centroids can be located in the center of activity of the zone, using land use maps, aerial photographs, and local knowledge. The center of activity is not necessarily the geographic center, but it is the midpoint of activity. The maximum number of allowable zones in UTPS is 2,500. UTPS-type microcomputer packages may have different limits.

Selection of links is the second major step in developing a network, since links represent those facilities (highways, roads, streets, etc.) that actually comprise the highway system. The two nodes that mark a link's end points define the link in the transportation network. Nodes can be defined as those locations in the highway system where vehicles are able to change direction of travel (e.g., intersections, interchanges, etc.) or where the level of service of a highway facility alters significantly (i.e., where a road narrows from four lanes to two lanes). It should also be noted that some nodes represent origins and destinations of

---

[177] This description was abstracted from "UTPS Highway Network Development Guide", prepared by COMSIS Corporation for the Federal Highway Administration, U.S. Department of Transportation, January 1983.

travel within the study area. These nodes are actually centroids and, as such, represent geographic units of travel demand at a single point. Figure 3-1 provides an example of network components.

In most UTPS-type applications travel time must be assigned to the link, since links define the actual paths along which traffic flows through the study area. UTPS conventions also call for separate links to designate opposite travel directions. One link is used to represent the east-west direction of flow, for example, and another to represent the west-east direction.

UTPS allows for a variety of highway attributes to be associated with each link, including:

- x-y coordinates to locate the nodes for plotting purposes;
- zones, which generally follow census data boundaries;
- geographic locations that generally define a corridor or larger (than zone) indication of location;
- area types to describe the kind of business or residential development that may be occurring around the node or link; and
- turn penalties and prohibitions to provide an indication of additional time required to make a particular movement through a node.

Link attributes summarize basic network information about highway facilities and are generally grouped into three broad categories.

3.4.2.3.1 Level of Service

Level of service is a qualitative measure describing operational conditions within a traffic stream and their perception by motorists and/or passengers. A level-of-service definition generally describes these conditions in terms of such factors as speed and travel time, freedom to maneuver, traffic interruptions, comfort and convenience, and safety.

Level of service is used to determine path choice and vehicle assignments in the network. Six levels of service are defined for each type of facility for which analysis procedures are available. They are given letter designations, from A to F, with level-of-service A representing the best operating conditions, and level-of-service F, the worst.[178]

---

[178] Highway Capacity Manual. Special Report 209. Transportation Research Board. National Research Council. Washington. D.C.. 1985.

Figure 3-1

LINK ATTRIBUTES
ZONE

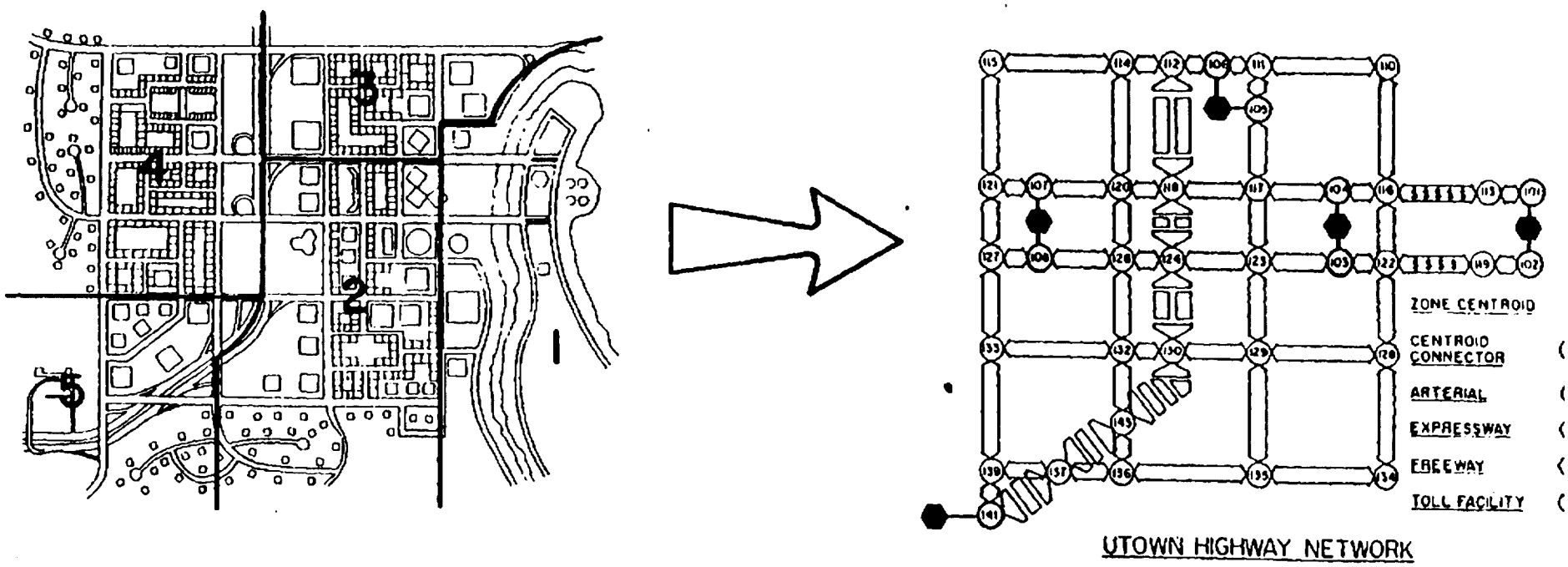

3.4.2.3.2 Physical Attributes

Physical attributes describe the type of area where a link is located, the number of lanes, and its observed volume. The functional system of a link serves as an index to the link speed/capacity tables. These tables assign free flow speed and per-roadway capacity to the links using a single digit integer. The integer corresponds to default speed/capacity values:

Functional System Code	Functional System
1	Freeway
2	Expressway
3	Two-way arterial with curb parking
4	One-way arterial without parking
6	Two-way arterial without parking

All other coded values (5 or greater than 6) are treated as centroid connector links in the default condition. The interpretation of functional system codes can be changed by modifying the speed/capacity table values. Functional system is also used to aggregate and summarize traffic assignment results in output reports.

Example speed/capacity tables are provided as Figures 3-2 and 3-3.

Area type describes the part of the area in which the facility is located. Like functional system, area type is indexed to the speed/capacity table so that free flow speed and capacity can be determined. Single digit integers used to represent link area types are:

Area Type Code	Area Type
1	Central business district (CBD)
2	CBD Fringe
3	Residential
4	Outlying

All other values (greater than 4) are interpreted in the default table as rural values. The interpretation of area type codes can be changed by modifying the default values in the speed/capacity table. Information on traffic assignment results can also be aggregated by area type in output reports.

3.4.2.3.3 Locational Link Attributes

Locational link attributes define each link's place in the study area in relation to other links. These attributes include the area type in which the link lies, the analysis zone in which it is found, its geographic location, and the group of links with which it belongs. With the exception of geographic location, the other link attributes have already been defined.

Figure 3-2

AREA TYPE	FACILITY TYPE (1)	(2)	(3)	(4)	(5)	(6)
(1) C.B.D.	1750 48	800 37	600 22	700 22	10000 10	600 22
(2) FRINGE	1750 48	1000 44	550 25	550 29	10000 15	800 25
(3) RESID.	1750 67	1100 47	550 28	900 32	10000 15	800 28
(4) OUTER CBD	1750 58	1000 37	550 22	650 24	10000 15	800 22
(5) RURAL	1750 67	1100 47	550 28	900 32	10000 15	800 ← Capacity 28 ← Speed

FACILITY TYPE CODES IN THE TABLE ABOVE ARE DEFINED AS FOLLOWS:

CODE	FACILITY TYPE
1	FREEWAY
2	EXPRESSWAY
3	TWO-WAY ARTERIAL WITH PARKING PERMITTED
4	ONE-WAY ARTERIAL STREET WITH PARKING PERMITTED EXECPT IN THE CBD. (AREA TYPE 1)
5	ALL OTHER
6	TWO-WAY ARTERIAL STREET WITH NO PARKING PERMITTED

* Capacity per lane per hour.

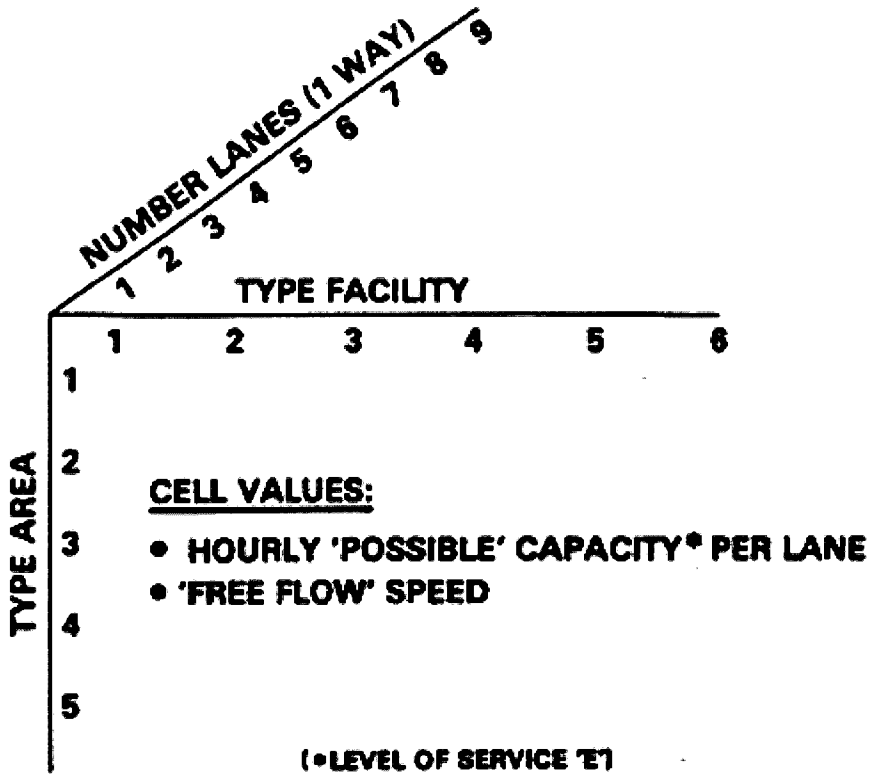
NUMBER LANES (1 WAY)
1 2 3 4 5 6 7 8 9
TYPE FACILITY
1 2 3 4 5 6
TYPE AREA
1
2
3
4
5
CELL VALUES:
• HOURLY 'POSSIBLE' CAPACITY* PER LANE
• 'FREE FLOW' SPEED
(*LEVEL OF SERVICE 'E')

It is important that air quality analysts understand the basic structure of the networks employed in a UTPS-type package so that they can interpret and manipulate the various output reports that are available from the individual programs. The remaining steps[179] in the transportation planning process are as follows.

3.4.2.3.4 Trip Generation

The relationships between trip making and the social-economic characteristics of the residents of an urban area, as well as the relationships between trip making and land use, are obtained from travel data and land use inventories. Trip generation procedures, which relate these characteristics, are then developed. There are several trip generation procedures available, such as regression analysis, cross classification analysis, and rate analysis.

Forecasted social, economic, and land use data are substituted for base year data in the trip generation procedure, and forecasts of trips are obtained for each analysis unit.

3.4.2.3.5 Trip Distribution

The origin-destination data collected in dwelling unit, truck, taxi, and external surveys provide an estimate of the existing travel taking place within, into, out of, and through the urban area on an average day. The trip distribution model is developed to simulate the manner in which trips are made between small analysis units within the study area. The Gravity Model is used in various urban areas throughout the United States.

3.4.2.3.6 Modal Split

This term is used to define the division of total person trips in an urban area between public (buses, trains, etc.) and private (automobiles, trucks, etc.) transportation, or the process of separating person trips by mode of travel. Thus, a modal split model is one that is used to forecast the amount of person trip travel that will use mass transit facilities. The calibration of this model is dependent upon the relationships that have been found from the travel data collected for the study year. Modal split analysis varies in the degree of complexity, ranging from simple estimates in smaller urban areas to complex mathematical relations in larger areas. It generally involves characteristics of the trip maker, the trip, and the transportation system.

3.4.2.3.7 Traffic Assignment

The trip data collected in travel surveys describe the total number of trips occurring between small analysis areas; however, these surveys do not collect data that describe the specific routes used to travel from an origin to a destination. Consequently, a traffic assignment technique is developed. This technique can be used to estimate the routes of

---

[179] The following descriptions of trip generation, trip distribution, modal split, and traffic assignment were obtained from Urban Origin-Destination Surveys. U.S. Department of Transportation, Federal Highway Administration, Washington, D.C.

travel that are used for trips occurring within the urban area. Traffic assignment may be described as the process of allocating trip interchanges to a specific transportation network. It is a tool that allows the transportation planner to assign either present trips (those trip interchanges between zones obtained from the travel surveys) or future trips (those forecasted for some future year) to various alternative transportation systems.

3.4.2.3.8 Feedback

Feedback refers generally to the relationships within and among the various steps of the transportation process. For example, in trip assignment, the constrained equilibrium approach first assigns trips to pathways that result in the quickest journey under an initial set of link-speed assumptions. However, under the constrained equilibrium algorithm, the initial set of speeds is altered as trips are assigned. As more and more trips are assigned to links, vehicle speed is reduced, often to the point where alternate routes from point A to point B are quicker.

Feedback among different planning steps is also logically important but often not implemented. For example, travel projections from transportation models are often not fed back to the original regional growth and land use projections that formed the basis for the transportation model. Ideally, this type of feedback should also proceed to equilibrium. However, there is now only limited information in the literature that describes exactly how to incorporate feedback effects, particularly feedback all the way back to regional growth and land use assumptions. Further, estimates of the degree to which incorporating such effects changes predictions of travel behavior are also limited.[180, 181]

3.4.2.4 Consistency Between Transportation Model VMT and HPMS

EPA encourages the use of transportation models in the development of SIP emission inventories. A transportation planning model run configured to the same base year (1990) as the required emission inventory can be an excellent source of geographic and temporal detail for transportation activity levels. However, since EPA and DOT both endorse the Highway Performance Monitoring System as the appropriate means by which to measure VMT, the detailed VMT estimates produced by the transportation planning process should be made consistent in the aggregate with HPMS.

The process of making the network model VMT estimates consistent with HPMS VMT estimates begins with the procedures discussed in Section 3.4.1. Recall that since the Federal Aid Urbanized Area boundaries of HPMS are not generally coincident with EPA's

---

[180] The Federal District Court of Northern California ruled that where a model had the capability to incorporate feedback effects, the planning agency was obligated to project travel with those effects included.

[181] EPA considers that the feedback effect between trip assignment and the trip origin/destination distribution is the most important at this time, given the current state of modeling practice and the potential for model improvement that incorporating such effects may have. The link travel times used for trip distribution should be consistent with the result of the trip assignment step.

non-attainment area boundaries, the HPMS and non-attainment area VMT estimates will not necessarily be identical. Therefore, the first step in making network model VMT consistent with HPMS VMT is to make non-attainment area VMT consistent with HPMS VMT. Once that is accomplished, that consistent non-attainment area VMT becomes the benchmark VMT to which network model VMT should be adjusted.

The actual adjustment of network model VMT is straightforward and parallels the discussion in Section 3.4.1.3.[182]

3.4.2.4.1 Non-Attainment Area the Same As the Network Model Area

Even if the boundaries of the non-attainment area are coincident with the geographic domain of the network model, there are several reasons why the estimates of VMT produced by the HPMS and the network model may be different.

- Not all higher level functional system links[183] may be coded into the network;
- Links on local functional systems may not be coded at all;
- Network VMT may be estimated for different time periods; e.g., annual rather than seasonal, average day rather than average weekday, separate peak and off-peak travel estimates rather than an average weighted by hour-of-the-day.

If the boundaries of the non-attainment area are coincident with the boundaries of the travel demand network model, then network model VMT and non-attainment area VMT[184] should be made identical. The adjustment required to achieve this identity is described by equation 3-14.[185, 186]

---

[182] Using HPMS rural area expansion factors is equivalent to allocating state rural totals by roadway miles.

[183] Interstate system, other freeways and expressways, other principal arterials, minor arterials, and collectors.

[184] Non-attainment area VMT is the HPMS-based VMT estimated by the procedures described in Section 3.4.1.

[185] States are encouraged to make separate adjustments for each HPMS functional system. However, a state may demonstrate that the more refined approach is infeasible due to inconsistent classification schemes, data problems, or constraints on time and staff. If it is not be possible to identify network links with HPMS functional systems, a state may adjust VMT and other network factors according to equation 3-14a.

$$VMT_{(Adj\ Network,\ t)} = (VMT_{(SIP)} / VMT_{(Network)}) \bullet VMT_{(Network,\ t)} \qquad (3\text{-}14a)$$

[186] Other network model parameters, such as the number of trips, number of cold starts, etc., (if used) should be increased or decreased by the same factor(s) so that, for example, evaporative emissions are correctly converted to grams per mile emission rates and so that cold start emissions are correctly weighted into an overall emission factor.

$$VMT_{(Adj.\ Network,\ i)} = (VMT_{(SIP,\ f)} / VMT_{(Network,\ f)}) \bullet VMT_{(Network,\ i)} \quad (3\text{-}14)$$

where $VMT_{(Adj.\ Network,\ i)}$ = Adj. Network Model VMT

$VMT_{(SIP,\ f)}$ = SIP Non-Attainment Area VMT[187, 188]

$VMT_{(Network,\ i)}$ = Original Network Model VMT

f = Functional System

i = Individual network link or group of links (e.g., links of one functional system in one area type)

3.4.2.4.2 Non-Attainment Area Inside of the Network Model Area

If the boundaries of the non-attainment area are entirely within the geographic domain of the network model, then the procedures described in Section 3.4.1.3.1.2 should be used to calculate an adjusted network VMT. This requires that network links or portions thereof are identified as to whether or not they are in the non-attainment area.

3.4.2.4.3 Non-Attainment Area Outside of the Network Model Area

If the boundaries of the non-attainment area are entirely outside of the geographic domain of the network model, then the procedures described in Section 3.4.1.3.1.3 should be used to calculate VMT.

The recommended method of estimating VMT in a completely rural non-attainment area is on the basis of the HPMS expansion factors used for an area within the state that is comparable in terms of land use, transportation use, and demographic characteristics.[189]

---

[187] Defined by equations 3-7, 3-7a and/or 3-8.

[188] Under some circumstances the adjustment factor could be based on an area other than the non-attainment area. For example, a designated CO non-attainment area may be considerably smaller than either the geographic domain of the network or the FAUA. In this case, if the network domain exceeds the FAUA boundaries, then the VMT contained within the FAUA, including VMT on local and other functional systems, could be the point of departure for equation 3-14. Or, if the network domain is smaller than the FAUA, network VMT could be supplemented with reasonable estimates of VMT outside of the network but within the FAUA, and that total VMT could be the point of departure for equation 3-14. A state may elect this option, provided that it demonstrates that it produces a more accurate estimate of VMT than equations 3-7, 3-7a and/or 3-8. Further, the state must continue to utilize the same approach for all of its CAAA reporting requirements. EPA Regional Offices are advised that use of equations 3-7, 3-7a and/or 3-8 is presumed to be the better approach for ozone non-attainment areas.

[189] Within HPMS all rural areas within the state are also grouped into one sampling universe. One alternative to estimating VMT on the basis of another rural area similar in terms of land use, etc., is to base the estimate on all other fully rural areas combined.

The recommended method of allocating VMT to this type of non-attainment area is described by equation (3-15).[190] This equation is similar to equation (3-8), which describes how to allocate VMT to a non-attainment area completely outside of the FAUA.

$$VMT_{(SIP,\ f,\ v)} = (\text{Roadway Miles}_{(SIP,\ f,\ v)} \ / \ \text{Roadway Miles}_{(HPMS,\ f,\ v)}) \bullet VMT_{(HPMS,\ f,\ v)} \qquad (3\text{-}15)$$

where HPMS = Applicable HPMS Area

SIP = SIP Non-Attainment Area

f = Functional System

v = Volume Group

3.4.2.4.4 Non-Attainment Area and Network Model Area Crossover

If the boundaries of the non-attainment area are neither entirely outside nor entirely inside the geographic domain of the network model, then a combination of the approaches described in Sections 3.4.2.4.2 and 3.4.2.4.3 will need to be applied. VMT in that portion of the non-attainment area that is within the network model's geographic domain should be based on equation 3-14; VMT in that portion of the non-attainment area that is outside of the network should be based on the procedures described in Section 3.4.1.3.1.3.

3.4.2.5 Local Functional System

Regional planning analyses frequently only represent the higher functional systems.[191] While in smaller urban areas the level of detail on the lower functional systems may be higher, conversations with FHWA officials have indicated that the local roads normally excluded from the network can represent up to 15 percent of the VMT that occurs in the planning area.

Further, the low speeds generally recorded on these streets can magnify their emissions contribution to the inventory. This omission can lead to a significant underestimate of the highway contribution to the total emissions inventory.

Therefore, if not accounted for by the highway network model explicitly, a separate estimate of the travel occurring within the transportation planning area on these lower functional systems must be prepared. The estimate of VMT may be based on MPO or DOT

---

[190] Other alternative methods of estimating VMT in this type of non-attainment area are discussed in section 3.4.1.6.

[191] Interstate system, other freeways and expressways, other principal arterials, minor arterials, and collectors.

judgment and/or FHWA studies of areas of comparable size.[192] The estimate of off-network VMT should be added to network VMT prior to use of equation 3-14.

3.4.2.6 Seasonal Adjustment

HPMS Annual Average Daily VMT should also be adjusted for seasonal effects. Since the VOC, NOx, and summer CO emission inventories are typical summer weekday inventories, VMT for ozone non-attainment areas should be adjusted to the summer season using the inverse of the factors used to adjust the 24- and 48-hour counts to AADT. Similarly, VMT for winter CO emission inventories should be adjusted using the same technique.

3.4.2.7 Daily Adjustment

Since base year emission inventories must also be calculated for a typical day, a similar adjustment using the inverse of the factors used to adjust the 24- and 48-hour counts to AADT should be made to convert typical summer day VMT to typical summer weekday VMT and to convert typical winter day VMT to typical winter weekday VMT.[193]

3.4.2.8 Allocating VMT to Time of Day

It may also be necessary to allocate daily VMT to each hour of the day. This is commonly done for purposes of preparing emissions estimates for the photochemical grid models used in forecasting ozone concentrations. The recommended method of apportioning daily VMT to specific hours is to use the HPMS continuous monitors available within the FAUA. If no such monitors exist within the non-attainment area being modeled, then the state may rely on other continuous monitors located in areas similar in geographic, land use, and demographic characteristics.

3.4.2.9 Allocating VMT to Functional Systems

To be consistent with HPMS, the SIP functional systems should, with few exceptions, be identical to the HPMS functional systems (Interstate System, Other Freeways and Expressways, Other Principal Arterials, Minor Arterials, and Collectors).[194]

---

[192] See section 3.4.1.3.2.

[193] Modeling inventories for particular days should also be adjusted for average day-of-week variations in VMT.

[194] One exception is that the Interstate System and Other Freeways and Expressways may be combined into a single functional system. A second exception is that the Collector, Local, and Frontage Roads may be combined into a single functional system. Finally, if it is not possible to map the classification system built into the network model into the HPMS functional systems, then the state may develop its own typing scheme as long as it is reasonable and represents the entire roadway network.

The recommended method for estimating VMT on each HPMS functional system within the non-attainment area is to follow the procedures outlined in Section 3.4.1.3; that is, to allocate VMT on the basis of roadway miles and functional class. The underlying assumption in this methodology is that VMT is generally a function of total roadway miles and that this relationship becomes more direct as individual types of highway facilities within specific areas are considered.

3.4.3 Exception to the Use of HPMS VMT

Since 1990 ground counts submitted to HPMS may not be as comprehensive and of as high a quality as FHWA intends all states to obtain for 1993 and later and since it may be possible for network-based travel demand models to be validated for 1990,[195] this guidance allows for the use of travel demand models to estimate 1990 VMT under certain circumstances. However, this method is not considered to be viable for most areas due to the general disrepair of a large number of network models. Areas should use this method only if their network model is particularly strong and their 1990 HPMS data are particularly weak, and only after consulting with EPA.[196]

An affected area with a strong network-based travel demand model that is based on reasonably recent demographic trip-making data may use its model to estimate 1990 VMT after consultation with EPA[197] and under the following conditions:

- Urban areas within the state were not sampled separately under HPMS in 1990;
- The state Department of Transportation did not adequately follow HPMS guidance in 1990, resulting in poor quality traffic counts;
- The state has made substantial progress in preparing its 1990 inventory using a network-based model and does not have the time and resources to switch approaches and still meet the Clean Air Act expectations for the November 1992, 1993, and 1994 SIP submittals.

---

[195] If 1990 demographic and economic input data are used, a model validated for 1987 or later could provide an acceptable VMT estimate for 1990.

[196] EPA Regional Offices are advised not to agree that the HPMS data are weak without consulting with divisional or regional FHWA officials who have direct knowledge of the HPMS data associated with the non-attainment area. Desirable features of a network model that is a candidate for SIP VMT estimation are that a) the model is validated with 1990 ground counts and that b) the model uses demographic inputs properly updated to 1990. (At a minimum, population by zone should be updated to 1990; preferably all socio-economic variables would also be updated to 1990.)

[197] EPA Regional Offices are encouraged to consult with divisional or regional FHWA officials who have direct knowledge of the network-based model under consideration.

An area using this method should make sure that all VMT in the entire non-attainment area is included in the estimate. Most network-based models normally do not assign intra-zonal trips, VMT on some local roads, or trips on functional classes outside of the modeling area. States may use any reasonable method to estimate VMT on those functional systems that are within the non-attainment area but that are not included in the model.

States adopting this approach should realize that, beginning in 1993, all urbanized areas with a population above 200,000 will be required to conduct HPMS sample panels for individual FAUAs and, therefore, will be required to estimate mobile source emissions in such a way that the VMT estimates used by the state are consistent with HPMS. This means that there should be no reason for an ozone area with poor HPMS data in 1990 not to base the "periodic inventory" for 1993 and the Reasonable Further Progress tracking inventory for 1996 on HPMS estimates, even if EPA accepted another method for the 1990 inventory. This switch in basis for the inventory may reveal that the method used for 1990 was not accurate, and it may be disadvantageous in terms of demonstrating progress in emissions reduction. A possible solution is for the area to project 1990 VMT backwards from the higher quality 1993 HPMS figures and submit a revision of its 1990 inventory using this revised estimate of 1990 VMT. Where the disparity between 1990 and 1993 estimates by two different methods appears to EPA to constitute an erroneous estimate of actual VMT changes, EPA may require such backward projections from 1993 data.

Appendix 3-A

Prescribed Volume Groups and Precision Levels

APPENDIX F

Prescribed Volume Groups and Precision Levels

Table F-1

RURAL AREA Volume Groups and Precision Levels

Vol. Grp.	Interstate (90-5)	Other Principal Arterial (90-5)	Minor Arterial (90-10)
01	0- 9,999	0- 4,999	0- 2,499
02	10,000- 19,999	5,000- 9,999	2,500- 4,999
03	20,000- 29,999	10,000- 14,999	5,000- 9,999
04	30,000- 39,999	15,000- 19,999	10,000-19,999
05	40,000- 49,999	20,000- 29,999	20,000-29,999
06	50,000- 59,999	30,000- 39,999	30,000-39,999
07	60,000- 69,999	40,000- 49,999	40,000-49,999
08	70,000- 79,999	50,000- 59,999	50,000-59,999
09	80,000- 89,999	60,000- 69,999	60,000-69,999
10	90,000-104,999	70,000- 84,999	70,000-79,999
11	105,000-119,999	85,000- 99,999	80,000-89,999
12	120,000-134,999	100,000-114,999	90,000-99,999
13	> or = 135,000	> or = 115,000	> or = 100,000

Vol. Grp.	Major Collector (80-10)	Minor Collector (80-10)
01	0- 2,499	0- 999
02	2,500- 4,999	1,000- 1,999
03	5,000- 9,999	2,000- 2,999
04	10,000-19,999	3,000- 4,999
05	20,000-29,999	5,000- 9,999
06	30,000-39,999	10,000-19,999
07	40,000-49,999	20,000-29,999
08	50,000-59,999	30,000-39,999
09	60,000-69,999	40,000-49,999
10	70,000-79,999	50,000-59,999
11	80,000-89,999	60,000-69,999
12	90,000-99,999	70,000-79,999
13	> or = 100,000	> or = 80,000

Prescribed Volume Groups and Precision Levels

Table F-2

SMALL URBAN AREA Volume Groups and Precision Levels

Vol. Grp.	Interstate (90-5)	Other Freeways and Expressways (90-5)	Other Principal Arterial (90-5)
01	0- 9,999	0- 9,999	0- 4,999
02	10,000- 19,999	10,000- 19,999	5,000- 9,999
03	20,000- 29,999	20,000- 29,999	10,000-14,999
04	30,000- 39,999	30,000- 39,999	15,000-19,999
05	40,000- 49,999	40,000- 49,999	20,000-24,999
06	50,000- 59,999	50,000- 59,999	25,000-29,999
07	60,000- 69,999	60,000- 69,999	30,000-34,999
08	70,000- 79,999	70,000- 79,999	35,000-39,999
09	80,000- 89,999	80,000- 89,999	40,000-44,999
10	90,000-104,999	90,000-104,999	45,000-54,999
11	105,000-119,999	105,000-119,999	55,000-64,999
12	120,000-134,999	120,000-134,999	65,000-74,999
13	> or = 135,000	> or = 135,000	> or = 75,000

Vol. Grp.	Minor Arterial (90-10)	Collector (80-10)
01	0- 2,499	0- 999
02	2,500- 4,999	1,000- 1,999
03	5,000- 9,999	2,000- 4,999
04	10,000-14,999	5,000- 9,999
05	15,000-19,999	10,000-14,999
06	20,000-24,999	15,000-19,999
07	25,000-29,999	20,000-24,999
08	30,000-34,999	25,000-29,999
09	35,000-39,999	30,000-34,999
10	40,000-49,999	35,000-44,999
11	50,000-59,999	45,000-54,999
12	60,000-69,999	55,000-64,999
13	> or = 70,000	> or = 65,000

Prescribed Volume Groups and Precision Levels

Table F-3

URBANIZED AREA Volume Groups and Precision Levels

Vol. Grp.	Interstate (80-10) 1/ (90-5) 2/	Other Freeways and Expressways (80-10) 1/ (90-5) 2/	Other Principal Arterial (80-10) 1/ (90-5) 2/
01	0- 24,999	0- 24,999	0- 2,499
02	25,000- 49,999	25,000- 49,999	2,500- 4,999
03	50,000- 74,999	50,000- 74,999	5,000- 9,999
04	75,000- 99,999	75,000- 99,999	10,000-14,999
05	100,000-124,999	100,000-124,999	15,000-19,999
06	125,000-149,999	125,000-149,999	20,000-24,999
07	150,000-174,999	150,000-174,999	25,000-34,999
08	175,000-199,999	175,000-199,999	35,000-44,999
09	200,000-224,999	200,000-224,999	45,000-54,999
10	225,000-249,999	225,000-249,999	55,000-69,999
11	250,000-274,999	250,000-274,999	70,000-84,999
12	275,000-299,999	275,000-299,999	85,000-99,999
13	> or = 300,000	> or = 300,000	> or = 100,000

Vol. Grp.	Minor Arterial 3/ (90-10) 2/	Collector 3/ (80-10) 2/
01	0- 2,499	0- 999
02	2,500- 4,999	1,000- 1,999
03	5,000- 9,999	2,000- 4,999
04	10,000-14,999	5,000- 9,999
05	15,000-19,999	10,000-14,999
06	20,000-24,999	15,000-24,999
07	25,000-34,999	25,000-34,999
08	35,000-44,999	35,000-44,999
09	45,000-54,999	45,000-54,999
10	55,000-69,999	55,000-69,999
11	70,000-84,999	70,000-84,999
12	85,000-99,999	85,000-99,999
13	> or = 100,000	> or = 100,000

1/ Precision levels for individual urbanized areas.
2/ Precision levels for collective urbanized areas.
3/ For individual urbanized areas, use (70-15) precision level for States with 3 or more individual urbanized areas. Use (80-10) precision level for States with less than 3 individual urbanized areas.

4.0 EMISSIONS FROM NONROAD SOURCES

4.1 Introduction

Nonroad sources include motorized vehicles and equipment which are normally not operated on public roadways to provide transportation. The study and regulation of nonroad emission sources is mandated by the 1990 Clean Air Act. Section 213(a) of the 1990 Clean Air Act directs EPA to conduct a study of emissions from nonroad engines and vehicles in order to determine if such emissions cause, or significantly contribute to, air pollution which may be reasonably anticipated to endanger public health or welfare. This study was completed in November 1991.[198] The Clean Air Act also requires EPA to regulate emissions from nonroad engines and vehicles within 12 months after completion of the study if EPA makes a determination that these sources are significant contributors to concentrations of ozone or carbon monoxide (CO) in more than one area which has failed to attain the National Ambient Air Quality Standards (NAAQS) for these pollutants.

This chapter summarizes and discusses information from several studies, which EPA used to define emission factors and inventories for nonroad equipment. It also discusses work updating and expanding nonroad equipment inventories for use by state and local agencies. The nonroad inventories for the 24 non-attainment areas in the November 1991 EPA nonroad report are presently being updated to include areas that are within the recently redefined non-attainment boundaries. Inventories will also be compiled for nine additional areas. A sample inventory of nonroad equipment populations and emissions in the New York-New Jersey area is provided in this chapter (Appendix 4-A). States should use this chapter to guide them in the preparation of nonroad emission inventories for use in determining needed VOC reductions and developing implementation plans. The ten nonroad equipment categories are listed below.

- Lawn and Garden Equipment
- Agricultural Equipment
- Logging Equipment
- Light Commercial Equipment
- Industrial Equipment
- Construction Equipment
- Airport Service Equipment
- Recreational Equipment
- Recreational Marine Equipment
- Commercial Marine Vessels

---

[198] U.S. Environmental Protection Agency. Nonroad Engine and Vehicle Emission Study. Report and Appendices. EPA-21A-2001. Washington, D.C., Office of Air and Radiation. November 1991.

A description of these categories, including the 79 equipment types within them, can be found in Appendix B of this chapter. In general, each equipment type comes in three possible engine types: diesel, 4-stroke, and 2-stroke. However, for some types of equipment, there are no two-stroke engines, but units fueled by propane or CNG are in service. For simplicity, propane and CNG equipment is included in the 2-stroke engine type tables, but with their correct emission factors when operated on gaseous fuel.

4.2 Inventory Options Under This Guidance

In its nonroad report, entitled "Nonroad Engine and Vehicle Emission Study," EPA developed two emission inventories for the first nine categories listed above and a single inventory for the tenth.[199]

The first nine categories consist of nonroad engines and vehicles for 24 areas. Inventories for the last equipment category (commercial marine vessels) are only approximate and available for only six areas.

For the first inventory, designated as Inventory A, EPA used commercially and publicly available data so that the method could be repeated by state agencies and other groups. EPA used confidential industry-supplied sales and other data, which are not publicly available, for the second inventory, Inventory B. The second inventory provided EPA with a cross check for the first inventory results. Both inventories agreed reasonably well.

4.2.1 Options for Areas With EPA Provided Inventories

EPA has contracted with Energy and Environmental Analysis, Inc. to update the nonroad equipment inventories based on new non-attainment boundaries for ozone and carbon monoxide for the 24 areas in the nonroad report. These areas, which were selected to be geographically representative of areas with significant air pollution problems, are defined as metropolitan statistical areas (MSAs), consolidated metropolitan statistical areas (CMSAs), north east county metropolitan areas (NECMAs), or air basins. The exact definitions of these terms can be found in the State and County Metropolitan Area Data Book, U.S. Bureau of the Census, 1986. These areas are listed below, as presented in Table 1-03 of the EPA nonroad report.

---

[199] U.S. Environmental Protection Agency. Nonroad Engine and Vehicle Emission Study. Report and Appendices. EPA-21A-2001. Washington, D.C.. Office of Air and Radiation. November 1991.

- Atlanta, Georgia MSA
- Baltimore, Maryland MSA
- Baton Rouge, Louisiana MSA
- Boston-Lawrence-Salem-Lowell-Brockton, Massachusetts NECMA
- Chicago-Gary-Lake County, Illinois, Indiana, Wisconsin CMSA
- Cleveland-Akron-Lorain, Ohio CMSA
- Denver-Boulder, Colorado CMSA
- El Paso, Texas MSA
- Hartford-New Britain-Middletown-Bristol, Connecticut NECMA
- Houston-Galveston-Brazoria, Texas CMSA
- Miami-Fort Lauderdale, Florida CMSA
- Milwaukee-Racine, Wisconsin CMSA
- Minneapolis-St. Paul, Minnesota-Wisconsin MSA
- New York-Northern New Jersey-Long Island, New York-New Jersey-Connecticut CMSA/NECMA
- Philadelphia-Wilmington-Trenton, Pennsylvania-New Jersey-Delaware-Maryland CMSA
- Provo-Orem, Utah MSA
- St. Louis, Missouri-Illinois MSA
- San Diego, California Air Basin
- San Joaquin, California Air Basin
- Seattle-Tacoma, Washington CMSA
- South Coast, California Air Basin
- Spokane, Washington MSA
- Springfield, Massachusetts NECMA
- Washington, D.C.-Maryland-Virginia MSA

Air quality non-attainment boundaries, established by the Office of Air Quality Planning and Standards, for these and all other areas are defined in the November 6, 1991, Federal Register Notice, "Designation of Areas for Air Quality Planning Purposes".[200] The new boundaries sometimes divide up counties and MSAs/CMSAs. A county or MSA/CMSA was divided in this manner if a state and/or local government could show that sources in a part of the county or MSA/CMSA did not contribute significantly to violations of the ambient standard.

In addition, EPA is developing inventories for nine additional areas. With these additional areas, EPA will have determined nonroad inventories for all moderate-2 or worse non-attainment areas for CO (greater than 12.7 ppm), all the areas in serious or worse non-attainment for ozone (16.0 ppm or greater), and several miscellaneous areas. These additional areas are listed below.

---

[200] U.S. Environmental Protection Agency. Designation of Areas for Air Quality Planning Purposes. 40 CFR Part 81. Final Rule. Washington. D.C.. Office of Air and Radiation. November 6. 1991.

- Anchorage, Alaska
- Tucson, Arizona
  Pima County
- Las Vegas, Nevada
- Phoenix, Arizona
  Maricopa County
- Muskegon, Michigan
- Portsmouth-Dover-Rochester Area, New Hampshire
  Rockingham County
  Strafford County
- Providence, Rhode Island
- Beaumont-Port Arthur, Texas
- Sheboygan, Wisconsin

4.2.2 Options For Areas With EPA Provided Inventories

For the 33 areas listed above, states have several options as listed below. For the 24 areas originally included in the EPA nonroad report, there are three EPA inventories that can be used.

- (A+B)/2 Inventory
- Inventory A
- Inventory B

State and local agencies wanting to examine these inventories should send in the request sheet at the end of this chapter for a disk with the inventories in Lotus compatible files and a report discussing them. In general, the average of inventories A and B is preferred since it utilizes all available input, both from the EPA study and that provided by industry. However, either the A or B inventory may be used by either category or equipment type if local agencies have data or knowledge to support its use over the average of the two inventories. With sufficient technical justification, states may also move equipment types and emissions inventories among counties within the non-attainment area in a way which they believe to be more realistic. All such changes should be noted in the documentation of the inventory. Also, any changes that are made should be kept within the given non-attainment area, unless the state does a comprehensive analysis of the equipment type across the entire CMSA/MSA.

Limited data for commercial marine vessels can be found in the EPA nonroad report for the six areas listed below.

- Baltimore
- Baton Rouge
- Houston-Galveston
- New York-New Jersey
- Philadelphia
- Seattle/Tacoma

The three types of commercial vessels include harbor, ocean-going, and fishing vessels. States may use the commercial marine inventories found in the Booz, Allen, and Hamilton report for these six areas, making and documenting whatever changes are needed to include only partial county areas where appropriate.[201] States may also use the methodology in this report to create local inventories. Upon request, EPA will supply the states with the Booz, Allen, & Hamilton report. States may also use the methodology in the previous edition of Volume IV, being certain that commercial and recreational marine are handled as separate categories.

4.2.3 Options For Areas Without EPA Provided Inventories

For areas not among the 33 areas listed above, there are several options. The states may choose one of the 33 areas, which is similar in terms of climate and economic activity, so that emission inventories can be produced by applying the ratio of the populations of the two areas. States may opt to produce inventories by doing a ratio of the populations at the county level, choosing counties from several of the 33 areas if appropriate. Please use the form at the end of this chapter to request one or more of the 33 non-attainment area inventories. States may also use the EPA methodology, using local data to develop inventories for one or all of the nine categories. States may also apply the Energy and Environmental Analysis, Inc. methodology themselves or obtain consultant services to do so. If for some reason one of the two methods discussed above cannot be used for areas not among the 33 areas already inventoried, states may use the 1989 Volume IV guidance. However, this should only be considered as an option of last resort. Other approaches may also be used if they have technical support at least equal to or better than the EPA methodologies.

4.3 Explanation of EPA Provided Inventory

Nonroad emission inventories have been calculated for 33 areas, including all areas that are serious and above for ozone and moderate-2 and above for carbon monoxide. The inventories can be used in turn to develop the Area and Mobile Source (AMS) inputs for the Aerometric Information and Retrieval System (AIRS), which is discussed in Section 4.4. The AMS inputs can in turn be used to recreate nonroad inventories. Since the AMS methodology is the official way to calculate and document the inventory, the use of AMS inputs is needed.

---

[201] Booz Allen & Hamilton, Inc. Commercial Marine Vessel Contributions to Emission Inventories, Final Report to Environmental Protection Agency. Los Angeles, California, October 7, 1991.

Section 4.3.1 explains how the AMS inputs are derived from the EPA inventories. Section 4.3.2 explains the AMS inputs themselves and how they can be used to calculate emission inventories. The general methodology used in developing the EPA inventories will be explained later in Section 4.4.

4.3.1 Derivation of AMS Inputs

The following general information is included in the overall EPA nonroad inventory tables.

- Equipment population (for ozone and CO non-attainment areas)
- Emission factors (g/hp-hr, g/hr, g/gal, g/day)
- Hours/year (gallons/year in some cases)
- Average horsepower
- Average load
- Evaporative emission season (229 days)
- 1/SAF[202] (tons per year/tons per summer day)
- 1/SAF (tons per year/tons per winter day)
- VOC tons per summer day (ozone non-attainment area)
- NOx tons per summer day (ozone non-attainment area)
- CO tons per summer day (ozone non-attainment area)
- CO tons per winter day (CO non-attainment area)
- Particulates tons per year
- Population (human) and tons/person

Each non-attainment area is broken down into individual counties and, where appropriate, portions of counties that are included within the non-attainment boundaries (i.e., townships and boroughs). The methodology for developing the county and sub-county data is summarized in Section 4.4. The above information is given as needed for each county or sub-county, as well as the non-attainment area as a whole. The sub-county boundaries are defined in the November 6, 1991, 40 CFR Part 81.[203]

Emission factors are given for 79 equipment types and include VOC, CO, NOx, and particulates. VOC emissions are divided into the following subcategories.

---

[202] SAF stands for seasonal adjustment factor. The columns 1/SAF are taken directly from the spread sheets used for the EPA nonroad report. Although, SAF itself is in units of tons per seasonal day/tons per year and is used to multiply the annual inventory to obtain seasonal tons/day.

[203] U.S. Environmental Protection Agency. Designation of Areas for Air Quality Planning Purposes. 40 CFR Part 81. Final Rule. Washington, D.C., Office of Air and Radiation, November 6, 1991.

- exhaust
- evaporative
- crankcase
- refueling

These emission factors are derived from EPA and other test data with appropriate extrapolations to the different equipment types. Evaporative emissions presently include only diurnal emissions assumed to occur for 229 days of the year. Note that particulate inventories are being calculated simply because the information is available. These calculations are only being done for ozone and CO non-attainment boundaries, rather than the specific boundaries for PM_{10}. The reason for this is that the emphasis of the present work is on ozone and CO non-attainment. A sample inventory calculation using the given information is shown in Appendix 4-C.

It is important to note that the definition of VOC excludes methane and ethane but includes formaldehyde and acetaldehyde. Instead of VOC, the 1991 EPA nonroad report contains total hydrocarbons (THC, as measured by a flame ionization detector), which includes methane and ethane but excludes formaldehyde and part of acetaldehyde. In the process of revising the emission inventories for the original 24 areas and developing inventories for the additional areas, THC has been converted into VOC for 4-stroke and diesel equipment using a correction factor. This is being done in order for the data to be compatible with AMS, as discussed in Section 4.3.2. For 2-stroke engines it is being assumed that THC is equivalent to VOC (that is, a THC to VOC correction factor of 1.00). One reason for this assumption is that 2-stroke emissions contain significant amounts of unburned fuel, for which THC and VOC are the same, compared to 4-stroke engines. Another reason is that no quantitative data exists on methane, ethane, and aldehyde emissions from 2-stroke engines.

The seasonal adjustment factor is provided to calculate winter and summertime inventories for VOC, CO, NOx, and particulates. The annual inventories are adjusted so that the output is in tons per summer day (tpsd) for the ozone non-attainment areas. Emission inventories for CO are also adjusted so that the output is in tons per winter day (tpwd) for the CO non-attainment areas.

For each CMSA, tables are available in hard copy (paper) or on disk in a text or Lotus format. States may use the order form in the back of this chapter to request the data for the non-attainment area of interest.

Again, separate information is given for 2-stroke, 4-stroke, and diesel engines. All 79 equipment types spanning 9 nonroad engine categories are included. However, as mentioned earlier, the commercial marine vessel category is not included.

Another important point to make on the eventual application of these data is that diesel, 4-stroke, and 2-stroke engine emissions all have different exhaust HC speciations. The 4-stroke gasoline and diesel engines can use the standard EPA motor vehicle speciations. For the present time, we recommend that the standard EPA speciation for non-catalyst gasoline engines also be used for 2-stroke and propane engines. In addition, evaporative emission speciation differs from exhaust, consisting of more volatile fuel components with no combustion products. However, in order to keep inventory speciation simpler, the two categories are being combined based on the relative amounts of exhaust and evaporative emissions for the 2-stroke and 4-stroke engines. EPA will provide later guidance concerning the typical fraction for combining the exhaust and evaporative speciations, or the user can determine it from the detailed inventory tables.

4.3.2 AMS Inputs

The AMS system has the following five mandatory inputs.

- Annual activity level (hp-hr, gal, hrs, day)
- Emission factor (g/hp-hr, g/gal, g/hr, g/day)
- Period throughput (% annual activity based on emission mass during 3 month period)
- Adjustment factors[204] (weekday, Saturday, Sunday, operating fractions)
- Category operating parameters

The first two inputs have to be compatible so that one can calculate overall emissions. The EPA nonroad report generally gives exhaust emissions in g/hp-hr units but sometimes they are given in g/gal and g/hr units. Evaporative emissions are in g/day but can be artificially converted into one of the above units by knowing how many horsepower-hours, gallons, or hours of operation occur each day.

Item #1, the annual activity level for an equipment type, has to be the sum of all activity within an area (that is, equipment type population times activity per unit piece of equipment) rather than activity per unit equipment type, as given in the EPA nonroad report. Therefore, these levels will be greatly different from one area to another. It is important to note that the activity levels will be different for each county or portion of a county within a non-attainment area due to the changes in equipment population from one county to another.

Item #2, emission factors, are directly available from the November 1991 EPA nonroad study for CO and NOx. Approximate factors are available for particulates. These factors are in g/hp-hr, g/gal, and g/hr. The underlying emission factors are the same for all non-attainment areas. However, as with motor vehicles, there are separate emission factors for exhaust, crankcase, evaporative (diurnal), and refueling VOC. In addition, there will

---

[204] Adjustment factors are not mandatory for calculations to proceed in AMS, but should be provided if modeling will be done.

eventually be information on evaporative (hot soak), running loss, and resting loss HC. There is no nonroad emission factor model, such as MOBILE 4.1, to combine exhaust and evaporative emissions that are in different units. The nonroad report multiplies each emission factor by the appropriate activity level to compile the composite VOC inventory, as illustrated in Appendix D of this chapter.

For development of the base year inventory and for AMS data entry, a single composite emission factor for VOC, combining the different sources of VOC (i.e., evaporative versus exhaust), is being provided. This composite factor is being created by dividing the total VOC in annual tons by the activity levels. The total evaporative inventory, which is dependent only on equipment population and days per year, is divided by activity levels (hp-hr, hours, or gallons of fuel) as one part of the emission factor. Since this particular fraction (evaporative inventory/activity level) will vary from area to area, the overall Item #2 VOC emission factors will vary slightly from one area to another.

Item #3, period throughput, is the percent of annual activity occurring in the 3 month summer and winter periods. This is being calculated from the EEA information for summer and winter. The tons per winter day and tons per summer day are being compared to tons per year in deriving these factors. The throughput is based on emission tons rather than activity level. Therefore, it is compatible with the annual emission factors in calculating summer and winter inventories.

Item #4, adjustment factors, account for activity variation in different periods of the week (weekdays, Saturdays, Sundays). EPA has no quantitative information here. EPA recommends the same treatment that is implicit in the November 1991 nonroad report, assuming all nonroad activity is distributed equally over every day of the week. For this case, the adjustment factor is 1.0. This is an approximate assumption and, in the aggregate, may be justified because some categories (e.g., construction equipment) operate mostly during the week while others (e.g., recreational equipment and recreational marine equipment) operates largely on weekends. The states may use their own judgement or data to assign other factors.

Item #5, category operating parameters, are days/week and weeks/year for equipment operation. The states should assume that the equipment operates seven days/week and 52 weeks/year. This is an artificial treatment which will make the calculations work out properly, since the period throughput already accounts for weeks/year because it is emission weighted.

Not all of the detail needed to revise nonroad inventories, if emission factors are revised at a later date, will be provided in the AMS format. Instead, inventory revisions would be made (if decided by the states) by going back into the EEA input, which is available separately, and altering specific items (such as equipment populations, hours of

usage, and emission factors) and then recalculating the factors used for AMS. For this purpose, the specific EEA data discs for the items given in Section 4.3.1, which were used to calculate the AMS inputs for the non-attainment areas that were examined, must be used.

4.4 General Methodology Used In Deriving Emission Inventories For 33 Areas

This section explains the methodology developed and used by EEA and EPA to update emission inventories for a given non-attainment area from the 1991 EPA nonroad report. Much of the information in this section has been taken directly from an EEA draft report entitled, "Methodology to Estimate Nonroad Engine and Vehicle Emission Inventories at the County and Sub-County Level," which gives information primarily for the New York area and describes the methodology planned for use for the other areas.[205] This methodology is frequently generic in nature with extrapolations being made to smaller areas from equipment populations in larger areas. This might lead to some minor cases of some equipment types being listed in areas where they would not be expected to be found. EPA and EEA will be reviewing the inventories to try to screen out these anomalies.

The following inputs are used to develop nonroad emission inventories.

- The equipment populations in a given area;
- The annual hours of use of each type of equipment adjusted for geographic region and for the season of interest for each pollutant studied;
- The average rated horsepower of each type of equipment;
- The typical load factor for each type of equipment;
- An emission factor (EF).

The emission factor is defined as the average emissions of each pollutant per unit of use (gram/horsepower-hour) for each category of equipment. In order to calculate emission factors for nonroad equipment, EPA compiled and used data from past tests and studies, as well as new data supplied to EPA from engine manufacturers. Using these data, EPA developed emission factors for tailpipe exhaust, refueling, evaporative, and crankcase emissions with appropriate adjustments to account for in-use emissions. These emission factors can be found in Appendix I of the EPA nonroad report.[206]

---

[205] Energy and Environmental Analysis, Inc. Methodology To Estimate Nonroad Engine and Vehicle Emission Inventories At the County and Sub-County Level. Draft Report to the Environmental Protection Agency. Arlington, Virginia. February 11, 1992.

[206] U.S. Environmental Protection Agency. Nonroad Engine and Vehicle Emission Study. Report and Appendices. EPA-21A-2001. Washington, D.C., Office of Air and Radiation. November 1991.

For the EPA nonroad report, EEA estimated equipment populations by CMSA or NECMA using regression analysis of state level populations and activity indicator statistics.[207] EEA relied on Power Systems Research (PSR) as a major source of data for national and state equipment populations, annual hours of use, load factors, horsepower, 2-cycle/4-cycle distributions, and LPG/CNG penetrations. Linear relationships were derived between economic activity indicators and equipment category populations. County-level indicators were summed across each CMSA or NECMA and these sums were plugged into the corresponding fitted regression to arrive at equipment population estimates for each area in the study. However, the methodology from the EEA final report, "Methodology to Estimate Nonroad Equipment Populations by Nonattainment Areas," did not address developing inventories for counties and sub-counties which EPA later calculated and included within the boundaries of the 24 CO and ozone non-attainment areas in the EPA nonroad report.

4.4.1 Explanation of Methodologies to Distribute Equipment Within Each Category Type at the County Level

Adjustments to the emissions inventories contained in the EPA nonroad report must be made through changes in the county populations of nonroad equipment, since load factors, annual hours of use, emission factors, average horsepower, 2 cycle/4 cycle distribution, LPG/CNG penetration, and seasonality factors remain essentially constant throughout an area and, in some cases, on a state or national level. In order to do this, activity indicators used in the previous EEA analysis are used at the county level to determine equipment populations by county and equipment type. In general, these indicators are derived from economic data presented in various census publications. By using regression analysis, it can be determined whether there is a strong relationship between specific activity indicators and an equipment category's state population. These regressions were done for the areas in the EPA nonroad report.[208] If an activity indicator proved to have a strong relationship with the equipment category of interest, it was used to distribute the equipment types within a category at the county level, using data supplied by Power Systems Research. Shown below is the general formula (equation 4-1) used to distribute national equipment populations to the local county level unless otherwise specified.

$$\text{County Pop} = \frac{\text{County Activity Indicator}}{\text{National Activity Indicator}} \times \text{National Pop} \qquad (4\text{-}1)$$

---

[207] Energy and Environmental Analysis, Inc. Methodology To Estimate Nonroad Equipment Populations By Nonattainment Areas, prepared for U.S. Environmental Protection Agency, September 1991.

[208] U.S. Environmental Protection Agency. Nonroad Engine and Vehicle Emission Study. Report and Appendices. EPA-21A-2001. Washington, D.C., Office of Air and Radiation, November 1991.

Using logging activity (employees) as an indicator, logging equipment populations were determined in the EPA nonroad report at the county level by taking the ratio of county logging employment over national logging employment and multiplying it by national logging equipment populations.

For the lawn and garden equipment category, the number of single family housing units and the number of landscape and horticultural service employees in the county of interest were used to distribute equipment populations. However, for chainsaws, which are included in the lawn and garden category, EPA used a methodology suggested by the Portable Power Equipment Manufacturers Association (PPEMA) using a combination of inventories A and B.[209] This method was based on a combination of activity indicators, including rural area population, urban population outside of major urbanized areas, and landscaping/horticultural employment. This methodology is shown below in equation 4-2.

$$N_A \text{ local} = \frac{N_B \text{ local}}{N_B \text{ national}} \times N_A \text{ national} \qquad (4\text{-}2)$$

In this formula, N refers to the number of chain saws (all sizes), and A and B refer to inventories A and B.[210]

Motorcycle dealers were used as an activity indicator in order to distribute recreation equipment (e.g., nonroad motorcycles, minibikes, golf carts, snowmobiles, and specialty vehicle carts) from the state to the CMSA level. However, this indicator does not accurately reflect recreation equipment populations at the county level. Another problem is that there exists an inverse relationship between population and recreational equipment (i.e., recreation equipment is not usually used in densely populated areas). Therefore, EEA developed another methodology to use at the county level. First, the mean population density (people per square mile) is calculated for the MSA, CMSA, NECMA, or air basin and all the counties within it. Second, the standard deviation (sigma) from the mean is calculated using the individual county data. Third, those counties with a population density greater than a certain amount (e.g., the mean minus sigma) are assigned an equipment population of zero. Fourth, the equipment populations are then distributed among the remaining (lower population) counties according to the following formula (equation 4-3).

$$\text{Cntypop} = \text{Areapop} \times [\text{Area}/\text{Sum}(\text{Area})] \qquad (4\text{-}3)$$

---

[209] U.S. Environmental Protection Agency. Nonroad Engine and Vehicle Emission Study. Report and Appendices. EPA-21A-2001. Washington. D.C.. Office of Air and Radiation. November 1991.

[210] Ibid.

The variable Cntypop is the population of a particular recreation equipment type in a county which has a human population density less than that of the CMSA. The variable Areapop is the population of a recreation equipment type in the CMSA, of which the county (Cnty) is a part. The ratio within the brackets consists of a particular county's area divided by the sum of the area for all counties in the CMSA which have a population density less than that of the CMSA.

Air carrier operations were used as an activity indicator to distribute airport service equipment populations in counties in which an airport was located. If more than one airport was located in a county at which air carrier operations took place, the relevant activity levels at these airports were summed together.[211]

For agricultural equipment, EPA decided to use the following methodology, shown below in equation 4-4, for both the A and B inventories .

$$\text{County pop} = \text{Census county pop} \times \frac{\text{PSR national pop}}{\text{Census national pop}} \qquad (4\text{-}4)$$

Both census data and PSR data were used because census data provided the best indicator of county distribution of agricultural equipment (i.e., total number of units in the county), while the PSR data gave a better estimate of equipment actually used regularly in agricultural activity versus idle equipment.[212]

In order to distribute light commercial equipment (<50 hp) to the county level, the total amount of wholesale activity (number of establishments) was used as an activity indicator. EPA used the number of employees in manufacturing at the state and county level and regressed these data on PSR's state population for industrial equipment. For construction equipment, total construction activity (number of employees) was used to determine county level populations. For industrial equipment, the number of people employed in manufacturing was used as an activity indicator and was used to distribute state level populations to the county level. For construction equipment, the number of employees involved in total construction activity, including road construction, was chosen to distribute state level construction equipment populations to the county level.

For recreational marine vessels, the nonroad report used local boat registration data to ascertain the number of each marine equipment type in each non-attainment area. However, an adjustment was made in the marine vessel data to derive the number of marine engines.

---

[211] U.S. Environmental Protection Agency. Nonroad Engine and Vehicle Emission Study. Report and Appendices. EPA-21A-2001. Washington. D.C.. Office of Air and Radiation. November 1991.

[212] Ibid.

This was done in order to match the vessel data to the horsepower and hours of use estimates, which were calculated per engine. The second adjustment was done to determine how many engines were used in the non-attainment areas. Survey results provided by NMMA were used in this adjustment for 8 of the 24 areas, which are listed below.

- Baltimore
- Chicago
- Hartford
- Milwaukee
- Boston
- Denver
- Houston
- Seattle

Data from the survey was used in the following formula (equation 4-5).

$$EU = ER \times \frac{\text{Fuel Used}_{na}}{\text{Fuel Used}_{boats\ na}} + \%\ \text{Use Offshore} \qquad (4\text{-}5)$$

The variable EU stands for the number of engines used in the non-attainment area. The variable ER is equal to the number of engines registered in the non-attainment area Fuel Used_{na} is equal to the sum of the reported amount of fuel consumed inside the non-attainment area by boats registered inside the non-attainment area, plus the fuel consumed within the non-attainment area by boats registered outside the non-attainment area.
Fuel $\text{Used}_{boats\ na}$ is equal to the total reported amount of fuel consumed by boats registered inside the non-attainment area without regard to where the fuel was consumed.
The variable % Use Offshore is equal to the percentage of boats used in coastal waters or the Great Lakes 0-1 mile from the shore.

For the 16 non-attainment areas that NMMA did not include in their survey, the average ratios derived from the eight surveyed areas were applied. However, in some cases, the average ratios were too large for non-attainment areas with lesser amounts of navigable water area. In these cases, a calculation was made of the maximum number of boats that could be operated normally on the available water area, which was supplied by EEA. The area required per boat was supplied by NMMA. This calculation is shown in equation (4-6).

$$\text{Max. Boats} = \frac{\text{Water Surface Area}_{na}}{\text{Area Required}_{boat}} \qquad (4\text{-}6)$$

Max. Boats is equal to the theoretical maximum amount of boats that can operate on the available water surface area. Water Surface Area_{na} is equal to the total water surface area in the non-attainment area. Area Required_{boat} is equal to the average water surface area required per boat.

The result of the above calculation multiplied by the available hours of prime boating use (assumed nationwide), which is 384 hours/year (12 weeks/year x 4 days/week x 8 hours/day), provided the theoretical maximum number of summer boat hours inside the non-

attainment area, which was compared to the amount of summer boat hours calculated from the survey results and the local boat registrations. In the cases where the summer boat hours calculated from registrations and survey results exceeded the theoretical maximum calculated using 384 hours/year, the calculated number of engines used in the non-attainment area was reduced by the ratio of the theoretical maximum summer boat hours to the calculated summer boat hours. Because this correction ratio does not include offshore boat use, the average offshore use was subtracted out prior to applying the correction ratio. For areas on the ocean or on a Great Lake, the average of the offshore usage proportion for all the areas with offshore use was added back after applying the correction ratio. Note that recreational marine equipment was not allocated to the county level in the November 1991 nonroad report.

4.4.2 Explanation of Methodologies For Distributing Equipment Within Each Category at the Sub-County Level

When the non-attainment boundaries include only a portion of a county, the nonroad equipment population at the county level must be adjusted. This adjustment can usually be made based on the following fraction (equation 4-7).

$$\frac{\text{Human population at subcounty level}}{\text{Human population at county level}} \qquad (4\text{-}7)$$

This adjustment factor works well for nonroad equipment populations that can be expected to track human populations reasonable well in going from the county to subcounty level. This adjustment is used for the following nonroad equipment categories.

- lawn and garden
- light commercial
- industrial
- construction

For other equipment categories, different methodologies were used.

The following equipment categories are adjusted from a county to subcounty level using the same methodology, found in Section 4.4.1, for distributing recreation equipment from the CMSA, MSA, NECMA, or Air Basin to the county level.

- recreational
- logging
- agricultural

This methodology uses a mathematical relationship based on population density to distribute the equipment population to sparsely populated areas of a sub-county. Equation (4-8) shows this calculation below.

$$\text{Subcnty} = \text{Cnty}_{\text{equip pop.}} \times [(\text{Area})_{\text{subcnty}}/(\text{Area})_{\text{cnty}})] \qquad (4\text{-}8)$$

The variable Subcnty is a township or borough in the partial county of interest with a population density that is less than that of the CMSA. $\text{Cnty}_{\text{equip pop.}}$ is the population of a particular recreational equipment type within the county of which the partial county is a part. The ratio of $\text{Area}_{\text{subcnty}}$ over $\text{Area}_{\text{cnty}}$ is the ratio of the area of the partial county of interest to the area of the total county. In effect, this moves this equipment completely from highly populated areas of the partial county, where this equipment is not used much if at all, to the lower population areas where available land exists.

For recreational marine equipment, a similar method is used for county to subcounty allocations of equipment population, except that it does not limit the allocation of equipment to only partial counties that have a population density less than that of the CMSA. This is because in many cases, recreational marine equipment is used in bodies of water that are close to populated areas (e.g., the Potomac River in Washington, D.C.). Although this could be done by inspecting maps and considering other factors, such as usage patterns for the available water, it is quite difficult to determine the water area available for recreational marine equipment from a county to subcounty level.

For airport service equipment, subcounty populations are obtained simply by inspecting a map to see if the airport is in the subcounty portion being considered.

4.4.3 Seasonal Adjustment Methodology

EEA and EPA also applied seasonal adjustments to the emission inventories based on annual hours of use data in eight regions of the United States at different times of the year.[213, 214] These adjustments were also based on the fact that ozone violations usually occur in the summer and CO violations usually occur in the winter. In Inventory A, EEA and EPA used eight seasonality adjustments based on classifying each of the 24 original areas into eight regions, which are listed below.

---

[213] U.S. Environmental Protection Agency. Nonroad Engine and Vehicle Emission Study. Report and Appendices. EPA-21A-2001. Washington. D.C.. Office of Air and Radiation. November 1991.

[214] Energy and Environmental Analysis. Inc. Methodology To Estimate Nonroad Equipment Populations By Nonattainment Areas. prepared for U.S. Environmental Protection Agency. September 1991.

- Northeast
- Mid-Atlantic Coast
- Southwest
- Northwest
- Southeast
- Great Lakes
- Rocky Mountains
- West Coast

These regions were also classified into cold, medium and warm regions, which were geographically similar to regions found in a 1973 report by Hare and Springer.[215] The United States was divided up into these three temperature regions based on average January temperatures. A warm region was classified as being above 45^0F, a medium region was classified as being between 35^0F and 44^0F, and a cold region was classified as being below 35_F. For more detailed information, please refer to Appendix L of the EPA nonroad report.

The formulas listed below (equations 4-9 and 4-10) were applied using this information to determine summertime total HC and NOx emissions and wintertime CO emissions.

$$tpsd = tpy * SAF_{summer} \quad (4\text{-}9)$$

$$tpwd = tpy * SAF_{winter} \quad (4\text{-}10)$$

TPSD and TPWD refer to tons per summer and winter day, respectively. TPY stands for tons per year. SAF is the seasonal adjustment factor, which can be derived by the following formulas (equations 4-11 and 4-12).

$$SAF_{summer} = 4 * (\%\ \text{activity during summer}/365\ \text{days}) \quad (4\text{-}11)$$

$$SAF_{winter} = 4 * (\%\ \text{activity during winter}/365\ \text{days}) \quad (4\text{-}12)$$

The seasonal adjustment factors were calculated based on data from the Hare and Springer report mentioned above, the CARB Technical Support Document concerning lawn and garden equipment, 1987 SIP emission inventories, the Motorcycle Industry Council (MC), and the National Marine Manufacturers Association (NMMA). Some seasonal activity percentages are listed in the table below, which is the same as Table L-02, excluding

[215] Hare, C.T., and K.J. Springer. Exhaust Emissions from Uncontrolled Vehicles and Related Equipment Using Combustion Engines, Part 5. No. APRD-1494. San Antonio, TX. Southwest Research Institute. October 1973.

commercial marine equipment, in the EPA nonroad report. Recreational marine and recreation equipment seasonal activity percentages can be found in tables L-03, and L-04 in Appendix L of the EPA nonroad report.[216]

Equipment Category	Cold/North Summer	Cold/North Winter	Medium/Central Summer	Medium/Central Winter	Warm/South Summer	Warm/South Winter
Agricultural	50%	6%	40%	6%	34%	6%
Construction	43%	10%	38%	15%	33%	20%
Industrial	30%	20%	25%	25%	25%	25%
Lawn & Garden (excluding chainsaws)	50%	6%	40%	6%	34%	6%
Snowblower/ Snowmobiles	0%	100%	0%	100%	0%	100%
Airport Service	25%	25%	25%	25%	25%	25%
Logging (including chainsaws)	25%	25%	25%	25%	25%	25%
Light Commercial	25%	25%	25%	25%	25%	25%

4.5 New York Non-attainment Area Example

EEA has prepared an updated nonroad inventory for the New York CMSA, including partial counties included in the non-attainment boundaries. Some example tables from the final report containing the updated New York CMSA inventory for diesel, 4-stroke, 2-stroke, and propane/CNG engine types can be found in Appendix 4-A at the end of this chapter. These tables include information for some of the following items, most of which are in the spreadsheets for the November 1991 nonroad report. All of these items are being listed in the final EEA report for New York and the other areas.

[216] U.S. Environmental Protection Agency. Nonroad Engine and Vehicle Emission Study. Report and Appendices. EPA-21A-2001. Washington. D.C.. Office of Air and Radiation. November 1991.

- Equipment population (for ozone and CO non-attainment areas)
- Emission factors (g/hp-hr, g/hr, g/gal, g/day)
- Hours/year
- Average horsepower
- Average load
- Evap season (days)
- 1/SAF[217] (tons per year/tons per summer day)
- 1/SAF (tons per year/tons per winter day)
- VOC - tons per summer day
- NOx - tons per summer day
- CO - tons per summer day (ozone area)
- CO tons per winter day (CO area)
- Particulates tons per year
- Population (human) and tons/person

Table 4-1 lists the 26 counties and partial counties included in the New York CMSA, as well as the air quality classification of each county or partial county for CO and ozone. Tables 4-2 through 4-4 present nonroad inventory data for the New York CMSA using the (A+B)/2 inventories. Table 4-2 presents emission inventories for diesel equipment. Table 4-3 presents emissions per person for diesel equipment. Table 4-4 shows the AMS input parameters for diesel equipment.

[217] Seasonal Adjustment Factor.

Appendix 4-A

Emission Inventory Tables For New York CMSA

Table 4-1

Counties and Sub-County Areas Included
In the New York CMSA Example

County	Ozone Classification	CO Classification
Bergen, NJ	Nonattainment	Nonattainment
Essex, NJ	Nonattainment	Nonattainment
Hudson, NJ	Nonattainment	Nonattainment
Hunterdon, NJ	Nonattainment	Attainment
Middlesex, NJ	Nonattainment	
City of Perth Amboy		Nonattainment
Monmouth, NJ	Nonattainment	
Borough of Freehold		Nonattainment
Morris, NJ	Nonattainment	
City of Morristown		Nonattainment
Ocean, NJ	Nonattainment	
City of Toms River		Nonattainment
Passaic, NJ	Nonattainment	
Clifton City		Nonattainment
Patterson City		Nonattainment
Passaic City		Nonattainment
Somerset, NJ	Nonattainment	
Borough of Sommerville		Nonattainment
Sussex, NJ	Nonattainment	Attainment

Table 4-1 continued

County	Ozone Classification	CO Classification
Union, NJ	Nonattainment	Nonattainment
Bronx, NY	Nonattainment	Nonattainment
Kings, NY	Nonattainment	Nonattainment
Nassau, NY	Nonattainment	Nonattainment
New York, NY	Nonattainment	Nonattainment
Orange, NY	Nonattainment	Attainment
Putnam, NY	Nonattainment	Attainment
Queens, NY	Nonattainment	Nonattainment
Richmond, NY	Nonattainment	Nonattainment
Rockland, NY	Nonattainment	Attainment
Suffolk, NY	Nonattainment	Attainment
Westchester, NY	Nonattainment	Nonattainment
Fairfield, CT	Nonattainment	Nonattainment
Litchfield, CT	Nonattainment	
Bridgewater Town		Nonattainment
New Milford Town		Nonattainment
Bethlehem Town		Nonattainment
Thomaston Town		Nonattainment
Watertown		Nonattainment
Woodbury Town		Nonattainment
New Haven, CT	Nonattainment	Nonattainment

CMSA: NEW YORK

EQUIPMENT TYPES	Exhaust HC	Crankcase HC	Evap. HC	Refueling HC	VOC	CO (CO Area)	CO (O3 Area)	NOx	PM (O3 Area)	PM (CO Area)	VOC tpsd	NOx tpsd	CO tpwd (CO Area)	CO tpsd (O3 Area)
Trimmers/Edgers/Brush Cutters	0	0	0	0	0	0	0	0	0	0	0.00	0.00	0.00	0.00
Lawn Mowers	0	0	0	0	0	0	0	0	0	0	0.00	0.00	0.00	0.00
Leaf Blowers/Vacuums	0	0	0	0	0	0	0	0	0	0	0.00	0.00	0.00	0.00
Rear Engine Riding Mowers	0	0	0	0	0	0	1	1	0	0	0.00	0.00	0.00	0.00
Front Mowers	0	0	0	0	0	0	0	0	0	0	0.00	0.00	0.00	0.00
Chainsews <4 HP	0	0	0	0	0	0	0	0	0	0	0.00	0.00	0.00	0.00
Shredders <5 HP	0	0	0	0	0	0	0	0	0	0	0.00	0.00	0.00	0.00
Tillers <5 HP	0	0	0	0	0	0	0	0	0	0	0.00	0.00	0.00	0.00
Lawn & Garden Tractors	22	0	0	0	23	52	94	150	18	10	0.13	0.82	0.00	0.51
Wood Splitters	0	0	0	0	0	0	0	0	0	0	0.00	0.00	0.00	0.00
Snowblowers	0	0	0	0	0	0	0	0	0	0	0.00	0.00	0.00	0.00
Chippers/Stump Grinders	34	1	0	0	35	78	140	224	23	13	0.19	1.22	0.00	0.77
Commercial Turf Equipment	0	0	0	0	0	0	0	0	0	0	0.00	0.00	0.00	0.00
Other Lawn & Garden Equipment	0	0	0	0	0	0	0	0	0	0	0.00	0.00	0.00	0.00
Aircraft Support Equipment	90	2	0	0	93	341	349	807	81	79	0.26	2.21	0.93	0.96
Terminal Tractors	1,147	22	0	2	1,181	4,328	4,429	10,232	1,029	1,005	3.21	28.04	11.86	12.13
All Terrain Vehicles (ATVs)	0	0	0	0	0	0	0	0	0	0	0.00	0.00	0.00	0.00
Minibikes	0	0	0	0	0	0	0	0	0	0	0.00	0.00	0.00	0.00
Off-Road Motorcycles	0	0	0	0	0	0	0	0	0	0	0.00	0.00	0.00	0.00
Golf Carts	0	0	0	0	0	0	0	0	0	0	0.00	0.00	0.00	0.00
Snowmobiles	0	0	0	0	0	0	0	0	0	0	0.00	0.00	0.00	0.00
Specialty Vehicles Carts	0	0	0	0	0	0	0	0	0	0	0.00	0.00	0.00	0.00
Vessels w/Inboard Engines	75	0	0	0	76	55	114	532	34	16	0.56	3.97	0.01	0.85
Vessels w/Outboard Engines	0	0	0	0	0	0	0	0	0	0	0.00	0.00	0.00	0.00
Vessels w/Sterndrive Engines	0	0	0	0	0	0	0	0	0	0	0.00	0.00	0.00	0.00
Sailboat Auxiliary Inboard Engines	8	0	0	0	8	12	14	10	1	1	0.06	0.07	0.00	0.10
Sailboat Auxiliary Outboard Engines	0	0	0	0	0	0	0	0	0	0	0.00	0.00	0.00	0.00
Generator Sets <50 HP	269	5	0	1	277	888	1,122	1,795	184	146	0.75	4.92	2.43	3.07
Pumps <50 HP	60	1	0	0	62	198	250	400	41	33	0.17	1.10	0.54	0.68
Air Compressors <50 HP	30	1	0	0	31	98	124	199	20	16	0.08	0.54	0.27	0.34
Gas Compressors <50 HP	0	0	0	0	0	0	0	0	0	0	0.00	0.00	0.00	0.00
Welders <50 HP	119	2	0	0	123	394	497	796	82	65	0.33	2.18	1.08	1.36
Pressure Washers <50 HP	0	0	0	0	0	1	2	3	0	0	0.00	0.00	0.00	0.00
Aerial Lifts	84	2	0	0	86	237	324	748	58	43	0.24	2.05	0.65	0.89
Forklifts	849	16	0	2	874	2,396	3,278	7,573	836	611	2.37	20.75	6.56	8.98
Sweepers/Scrubbers	753	15	0	1	776	2,127	2,910	6,723	632	462	2.11	18.42	5.83	7.97
Other General Industrial Equipment	147	3	0	0	152	416	569	1,314	124	90	0.41	3.60	1.14	1.56
Other Material Handling Equipment	32	1	0	0	33	92	125	289	27	20	0.09	0.80	0.25	0.34
Asphalt Pavers	22	0	0	0	23	83	117	377	32	23	0.10	1.78	0.09	0.55
Tampers/Rammers	0	0	0	0	0	0	0	0	0	0	0.00	0.00	0.00	0.00
Plate Compactors	0	0	0	0	0	1	1	3	0	0	0.00	0.02	0.00	0.00
Concrete Pavers	23	0	0	0	24	68	95	209	18	13	0.11	0.98	0.07	0.45
Rollers	71	2	0	0	74	196	276	829	64	45	0.35	3.91	0.22	1.30
Scrapers	214	3	0	1	220	1,084	1,529	2,660	375	266	1.03	12.54	1.19	7.21
Paving Equipment	113	2	0	0	116	364	514	1,230	84	59	0.54	5.80	0.40	2.42
Surfacing Equipment	0	0	0	0	0	0	0	0	0	0	0.00	0.00	0.00	0.00
Signal Boards	8	0	0	0	8	23	33	52	5	4	0.04	0.24	0.03	0.15
Trenchers	134	3	0	0	138	563	794	870	115	81	0.65	4.10	0.62	3.74
Bore/Drill Rigs	64	1	0	0	66	296	416	498	54	38	0.30	2.35	0.32	1.96
Excavators	396	7	0	2	408	2,089	2,945	6,089	670	475	1.91	28.70	2.29	13.88
Concrete/Industrial Saws	0	0	0	0	0	2	3	3	0	0	0.00	0.02	0.00	0.01
Cement and Mortar Mixers	1	0	0	0	1	2	2	6	0	0	0.00	0.03	0.00	0.01
Cranes	914	20	0	2	944	2,159	3,045	7,468	868	615	4.41	35.19	2.36	14.35
Graders	527	10	0	1	543	922	1,301	3,286	333	236	2.54	15.48	1.01	6.13
Off-Highway Trucks	614	13	0	2	635	1,450	2,047	7,017	525	372	2.97	33.06	1.59	9.64
Crushing/Proc. Equipment	83	2	0	0	86	386	544	651	71	50	0.41	3.07	0.42	2.56
Rough Terrain Forklifts	291	6	0	0	300	1,230	1,734	1,387	228	162	1.40	6.54	1.35	8.17
Rubber Tired Loaders	968	22	0	3	1,002	3,923	5,532	11,871	1,333	945	4.69	55.94	4.30	26.07
Rubber Tired Dozers	125	3	0	0	129	298	416	1,426	91	64	0.60	6.72	0.32	1.96
Tractors/Loaders/Backhoes	1,007	22	0	2	1,039	3,468	4,890	7,263	747	529	4.86	34.22	3.80	23.04
Crawler Tractors	2,419	54	0	5	2,499	6,534	9,214	19,771	1,898	1,346	11.68	93.17	7.16	43.42
Skid Steer Loaders	383	7	0	1	394	1,164	1,642	1,751	236	168	1.84	8.25	1.28	7.74
Off-Highway Tractors	1,450	29	0	2	1,493	6,132	8,644	7,013	965	684	6.97	33.05	6.72	40.73
Dumpers/Tenders	0	0	0	0	0	0	0	0	0	0	0.00	0.00	0.00	0.00
Other Construction Equipment	92	2	0	0	95	424	599	717	78	55	0.45	3.38	0.46	2.82
2-Wheel Tractors	0	0	0	0	0	0	0	0	0	0	0.00	0.00	0.00	0.00
Agricultural Tractors	901	17	0	1	927	319	3,616	4,534	668	59	5.04	24.84	0.21	19.81
Agricultural Mowers	0	0	0	0	0	0	0	0	0	0	0.00	0.00	0.00	0.00
Combines	21	0	0	0	22	6	71	193	32	3	0.12	1.06	0.00	0.39
Sprayers	0	0	0	0	0	0	1	1	0	0	0.00	0.00	0.00	0.00
Balers	1	0	0	0	1	0	1	2	0	0	0.00	0.01	0.00	0.00
Tillers >5 HP	0	0	0	0	0	0	0	0	0	0	0.00	0.00	0.00	0.00
Swathers	12	0	0	0	13	3	29	159	13	1	0.07	0.87	0.00	0.15
Hydro Power Units	0	0	0	0	0	0	1	1	0	0	0.00	0.00	0.00	0.00
Other Agricultural Equipment	2	0	0	0	2	0	4	10	1	0	0.01	0.05	0.00	0.02
Chainsews >4 HP	0	0	0	0	0	0	0	0	0	0	0.00	0.00	0.00	0.00
Shredders >5 HP	0	0	0	0	0	0	0	0	0	0	0.00	0.00	0.00	0.00
Skidders	0	0	0	0	0	0	0	0	0	0	0.00	0.00	0.00	0.00
Fellers/Bunchers	0	0	0	0	0	0	0	0	0	0	0.00	0.00	0.00	0.00
TOTAL DIESEL EQUIPMENT	14,578	296	0	31	15,032	44,902	64,396	119,146	12,695	8,906	64.02	506.06	67.77	279.24

CMSA EMISSIONS PER PERSON (INV. A+B/2) - DIESEL EQUIPMENT
NEW Nonattainment Boundaries

17:46 Thursday, June 18, 1992 740

CMSA: NEW YORK

EQUIPMENT TYPES	VOC*	CO* (CO Area)	CO* (O3 Area)	NOx*	PM * (O3 Area)	PM * (CO Area)	CO - (CO Area)	VOC #	CO # (O3 Area)	NOx #
Trimmers/Edgers/Brush Cutters	0.00	0.00	0.00	0.00	0.00	0.00	0.00	0.00	0.00	0.00
Lawn Mowers	0.00	0.00	0.00	0.00	0.00	0.00	0.00	0.00	0.00	0.00
Leaf Blowers/Vacuums	0.00	0.00	0.00	0.00	0.00	0.00	0.00	0.00	0.00	0.00
Rear Engine Riding Mowers	0.22	0.33	0.89	1.42	0.16	0.06	0.00	0.00	0.00	0.00
Front Mowers	0.00	0.00	0.00	0.00	0.00	0.00	0.00	0.00	0.00	0.00
Chainsaws <4 HP	0.00	0.00	0.00	0.00	0.00	0.00	0.00	0.00	0.00	0.00
Shredders <5 HP	0.00	0.00	0.00	0.00	0.00	0.00	0.00	0.00	0.00	0.00
Tillers <5 HP	0.00	0.00	0.00	0.00	0.00	0.00	0.00	0.00	0.00	0.00
Lawn & Garden Tractors	35.98	54.98	145.60	232.95	28.71	10.84	0.00	0.20	0.80	1.28
Wood Splitters	0.02	0.04	0.07	0.11	0.01	0.01	0.00	0.00	0.00	0.00
Snowblowers	0.00	0.00	0.00	0.00	0.00	0.00	0.00	0.00	0.00	0.00
Chippers/Stump Grinders	53.67	82.23	217.23	347.58	35.78	13.54	0.00	0.29	1.19	1.90
Commercial Turf Equipment	0.00	0.00	0.00	0.00	0.00	0.00	0.00	0.00	0.00	0.00
Other Lawn & Garden Equipment	0.01	0.05	0.06	0.10	0.01	0.01	0.00	0.00	0.00	0.00
Aircraft Support Equipment	67.16	244.12	251.81	581.74	58.50	56.71	0.67	0.19	0.69	1.60
Terminal Tractors	852.63	3098.65	3196.88	7385.51	742.66	719.84	8.49	2.32	8.76	20.24
All Terrain Vehicles (ATVs)	0.00	0.00	0.00	0.00	0.00	0.00	0.00	0.00	0.00	0.00
Minibikes	0.00	0.00	0.00	0.00	0.00	0.00	0.00	0.00	0.00	0.00
Off-Road Motorcycles	0.00	0.00	0.00	0.00	0.00	0.00	0.00	0.00	0.00	0.00
Golf Carts	0.00	0.00	0.00	0.00	0.00	0.00	0.00	0.00	0.00	0.00
Snowmobiles	0.00	0.00	0.00	0.00	0.00	0.00	0.00	0.00	0.00	0.00
Specialty Vehicles Carts	0.14	0.03	0.43	0.69	0.07	0.00	0.00	0.00	0.00	0.00
Vessels w/Inboard Engines	124.85	56.95	167.55	874.12	55.19	16.76	0.01	0.92	1.40	6.52
Vessels w/Outboard Engines	0.00	0.00	0.00	0.00	0.00	0.00	0.00	0.00	0.00	0.00
Vessels w/Sterndrive Engines	0.00	0.00	0.00	0.00	0.00	0.00	0.00	0.00	0.00	0.00
Sailboat Auxiliary Inboard Engines	9.77	14.09	17.22	12.92	0.86	0.70	0.00	0.07	0.11	0.08
Sailboat Auxiliary Outboard Engines	0.00	0.00	0.00	0.00	0.00	0.00	0.00	0.00	0.00	0.00
Generator Sets <50 HP	297.68	752.83	1205.03	1928.05	198.18	123.81	2.06	0.81	3.30	5.28
Pumps <50 HP	66.34	167.73	268.56	429.69	44.17	27.59	0.46	0.18	0.74	1.18
Air Compressors <50 HP	33.08	83.23	133.90	214.24	22.02	13.69	0.23	0.09	0.37	0.58
Gas Compressors <50 HP	0.00	0.00	0.00	0.00	0.00	0.00	0.00	0.00	0.00	0.00
Welders <50 HP	131.90	333.68	533.97	854.34	87.82	54.88	0.91	0.35	1.46	2.34
Pressure Washers <50 HP	0.45	1.16	1.83	2.93	0.30	0.19	0.00	0.00	0.00	0.00
Aerial Lifts	105.87	229.97	397.09	917.39	71.30	41.29	0.63	0.29	1.09	2.51
Forklifts	1083.57	2328.45	4062.18	9384.57	1036.09	593.89	6.38	2.94	11.13	25.71
Sweepers/Scrubbers	960.46	2066.15	3601.56	8320.45	781.78	448.49	5.66	2.61	9.87	22.80
Other General Industrial Equipment	187.88	405.07	704.54	1627.64	152.97	87.95	1.11	0.51	1.93	4.45
Other Material Handling Equipment	41.51	88.91	155.64	359.59	33.77	19.29	0.24	0.11	0.43	0.99
Asphalt Pavers	29.31	77.10	151.63	488.06	41.25	20.98	0.08	0.14	0.71	2.30
Tampers/Rammers	0.00	0.00	0.00	0.00	0.00	0.00	0.00	0.00	0.00	0.00
Plate Compactors	0.35	0.66	1.32	3.93	0.31	0.16	0.00	0.00	0.00	0.02
Concrete Pavers	30.87	62.45	124.50	272.98	23.54	11.81	0.07	0.14	0.59	1.28
Rollers	95.83	181.64	358.43	1075.29	82.52	41.82	0.20	0.45	1.69	5.07
Scrapers	285.04	1005.28	1981.28	3447.43	486.29	246.74	1.10	1.33	9.34	16.25
Paving Equipment	150.84	337.65	666.11	1594.32	108.29	54.89	0.37	0.70	3.14	7.51
Surfacing Equipment	0.00	0.00	0.00	0.00	0.00	0.00	0.00	0.00	0.00	0.00
Signal Boards	10.46	21.42	42.22	67.57	6.94	3.52	0.02	0.05	0.20	0.32
Trenchers	178.61	521.69	1029.00	1128.06	148.70	75.39	0.57	0.84	4.85	5.31
Bore/Drill Rigs	84.60	273.84	534.58	639.77	69.51	35.61	0.30	0.39	2.52	3.02
Excavators	528.85	1936.67	3813.10	7882.84	867.60	440.65	2.12	2.47	17.97	37.15
Concrete/Industrial Saws	0.31	1.68	1.97	2.36	0.25	0.21	0.00	0.00	0.01	0.01
Cement and Mortar Mixers	0.72	1.64	3.20	7.65	0.52	0.26	0.00	0.00	0.01	0.04
Cranes	1223.61	2001.68	3949.19	9684.91	1125.07	570.25	2.19	5.71	18.61	45.64
Graders	704.36	855.17	1687.25	4262.51	431.40	218.65	0.94	3.29	7.95	20.08
Off-Highway Trucks	824.41	1343.96	2657.78	9112.40	682.02	344.88	1.47	3.85	12.52	42.93
Crushing/Proc. Equipment	111.47	356.93	704.31	842.87	91.62	46.43	0.39	0.53	3.32	3.97
Rough Terrain Forklifts	388.41	1140.12	2246.25	1797.00	295.14	149.80	1.25	1.81	10.59	8.47
Rubber Tired Loaders	1298.43	3634.97	7170.93	15387.62	1728.03	875.95	3.99	6.07	33.79	72.51
Rubber Tired Dozers	165.81	273.80	534.51	1832.60	116.50	59.67	0.30	0.77	2.52	8.64
Tractors/Loaders/Backhoes	1347.07	3213.82	6338.89	9415.12	967.85	490.70	3.52	6.30	29.87	44.37
Crawler Tractors	3240.12	6054.99	11945.17	25632.36	2460.76	1247.35	6.64	15.14	56.29	120.79
Skid Steer Loaders	511.47	1079.00	2129.53	2271.50	306.64	155.37	1.18	2.39	10.03	10.70
Off-Highway Tractors	1929.77	5683.74	11171.78	9063.75	1246.91	634.37	6.23	9.01	52.64	42.71
Dumpers/Tenders	0.03	0.10	0.11	0.38	0.04	0.04	0.00	0.00	0.00	0.00
Other Construction Equipment	123.36	393.70	779.41	932.76	101.36	51.20	0.43	0.58	3.67	4.40
2-Wheel Tractors	0.00	0.00	0.00	0.00	0.00	0.00	0.00	0.00	0.00	0.00
Agricultural Tractors	3304.16	469.21	12886.09	16158.08	2381.89	86.73	0.31	17.95	70.61	88.53
Agricultural Mowers	0.00	0.00	0.00	0.00	0.00	0.00	0.00	0.00	0.00	0.00
Combines	77.87	9.18	251.35	688.21	115.50	4.22	0.01	0.43	1.38	3.77
Sprayers	1.48	0.10	2.46	5.09	0.78	0.03	0.00	0.00	0.01	0.01
Balers	2.37	0.04	3.96	8.12	1.01	0.01	0.00	0.00	0.01	0.03
Tillers >5 HP	0.00	0.00	0.00	0.00	0.00	0.00	0.00	0.00	0.00	0.00
Swathers	45.63	3.81	103.21	565.19	45.15	1.67	0.00	0.26	0.54	3.10
Hydro Power Units	1.38	0.04	2.30	4.75	0.71	0.01	0.00	0.00	0.01	0.01
Other Agricultural Equipment	6.03	0.44	14.05	35.78	3.87	0.12	0.00	0.05	0.08	0.19
Chainsaws >4 HP	0.00	0.00	0.00	0.00	0.00	0.00	0.00	0.00	0.00	0.00
Shredders >5 HP	0.00	0.00	0.00	0.00	0.00	0.00	0.00	0.00	0.00	0.00
Skidders	0.00	0.00	0.00	0.00	0.00	0.00	0.00	0.00	0.00	0.00
Fellers/Bunchers	0.00	0.00	0.00	0.00	0.00	0.00	0.00	0.00	0.00	0.00
TOTAL DIESEL EQUIPMENT	20756.03	40945.16	88367.90	157787.25	17288.30	8099.04	60.54	92.53	398.73	696.61

*... Grams per year per person
-... Grams per winter day per person
#... Grams per summer day per person

CMSA: NEW YORK

EQUIPMENT TYPES	Activity Level (O3 Area)	Activity Level (CO Area)	VOC Emis Fctr	CO Emis Fctr	NOx Emis Fctr	PM Emis Fctr	VOC Prd Thrput (Summer)	Period Thrput (Summer)#	Period Thrput (Winter)#	Adj Fctr (Weekday)
Trimmers/Edgers/Brush Cutters	0	0	0.00	0.00	0.00	0.00	0.00	0.50	0.00	1.00
Lawn Mowers	0	0	0.00	0.00	0.00	0.00	0.00	0.50	0.00	1.00
Leaf Blowers/Vacuums	0	0	0.00	0.00	0.00	0.00	0.00	0.50	0.00	1.00
Rear Engine Riding Mowers	103,503	57,042	1.24	5.00	8.00	0.82	0.00	0.50	0.00	1.00
Front Mowers	0	0	0.00	0.00	0.00	0.00	0.00	0.50	0.00	1.00
Chainsaws <4 HP	0	0	0.00	0.00	0.00	0.00	0.00	0.50	0.00	1.00
Shredders <5 HP	0	0	0.00	0.00	0.00	0.00	0.00	0.50	0.00	1.00
Tillers <5 HP	0	0	0.00	0.00	0.00	0.00	0.00	0.50	0.00	1.00
Lawn & Garden Tractors	16,982,610	9,421,744	1.24	5.00	8.00	0.82	0.00	0.50	0.00	1.00
Wood Splitters	18,239	9,119	1.23	5.00	8.00	0.82	0.00	0.50	0.00	1.00
Snowblowers	0	0	0.00	0.00	0.00	0.00	0.00	0.00	1.00	1.00
Chippers/Stump Grinders	25,391,604	14,099,512	1.23	5.00	8.00	0.82	0.00	0.50	0.00	1.00
Commercial Turf Equipment	0	0	0.00	5.00	8.00	0.82	0.00	0.50	0.00	1.00
Other Lawn & Garden Equipment	12,004	9,582	1.24	5.00	8.00	0.82	0.00	0.50	0.00	1.00
Aircraft Support Equipment	52,268,437	51,059,507	1.62	6.06	14.00	1.31	0.00	0.25	0.25	1.00
Terminal Tractors	663,041,188	647,866,184	1.62	6.06	14.00	1.31	0.00	0.25	0.25	1.00
All Terrain Vehicles (ATVs)	0	0	0.00	0.00	0.00	0.00	0.00	0.41	0.12	1.00
Minibikes	0	0	0.00	0.00	0.00	0.00	0.00	0.41	0.12	1.00
Off-Road Motorcycles	0	0	0.00	0.00	0.00	0.00	0.00	0.41	0.12	1.00
Golf Carts	0	0	0.00	0.00	0.00	0.00	0.00	0.41	0.12	1.00
Snowmobiles	0	0	0.00	0.00	0.00	0.00	0.00	0.00	1.00	1.00
Specialty Vehicles Carts	25,832	4,174	1.58	5.00	8.00	0.82	0.00	0.41	0.12	1.00
Vessels w/Inboard Engines	2,798,187	1,357,981	24.64	37.01	172.49	10.89	0.00	0.68	0.01	1.00
Vessels w/Outboard Engines	0	0	0.00	37.01	172.49	10.89	0.00	0.68	0.01	1.00
Vessels w/Sterndrive Engines	0	0	0.00	37.01	172.49	10.89	0.00	0.68	0.01	1.00
Sailboat Auxiliary Inboard Engines	58,174	51,063	123.53	217.72	163.29	10.89	0.00	0.68	0.01	1.00
Sailboat Auxiliary Outboard Engines	0	0	0.00	217.72	163.29	10.89	0.00	0.68	0.01	1.00
Generator Sets <50 HP	203,530,882	161,107,181	1.23	5.00	8.00	0.82	0.00	0.25	0.25	1.00
Pumps <50 HP	45,331,101	35,888,758	1.23	5.00	8.00	0.82	0.00	0.25	0.25	1.00
Air Compressors <50 HP	22,535,881	17,829,603	1.23	5.00	8.00	0.82	0.00	0.25	0.25	1.00
Gas Compressors <50 HP	0	0	0.00	0.00	0.00	0.00	0.00	0.25	0.25	1.00
Welders <50 HP	90,220,662	71,412,281	1.23	5.00	8.00	0.82	0.00	0.25	0.25	1.00
Pressure Washers <50 HP	313,493	248,009	1.23	5.00	8.00	0.82	0.00	0.25	0.25	1.00
Aerial Lifts	48,461,851	35,507,453	1.62	6.06	14.00	1.31	0.00	0.25	0.25	1.00
Forklifts	490,729,204	358,634,110	1.62	6.06	14.00	1.31	0.00	0.25	0.25	1.00
Sweepers/Scrubbers	435,655,281	318,399,439	1.62	6.06	14.00	1.31	0.00	0.25	0.25	1.00
Other General Industrial Equipment	85,154,398	62,349,113	1.62	6.06	14.00	1.31	0.00	0.25	0.25	1.00
Other Material Handling Equipment	18,752,937	13,714,686	1.62	6.06	14.00	1.31	0.00	0.25	0.25	1.00
Asphalt Pavers	33,241,423	23,602,367	0.62	3.20	10.30	0.75	0.00	0.43	0.10	1.00
Tampers/Rammers	0	0	0.00	0.00	0.00	0.00	0.00	0.43	0.10	1.00
Plate Compactors	294,106	207,892	0.83	3.10	9.30	0.75	0.00	0.43	0.10	1.00
Concrete Pavers	18,948,091	13,431,846	1.13	4.57	10.02	0.75	0.00	0.43	0.10	1.00
Rollers	80,896,442	57,357,909	0.83	3.10	9.30	0.66	0.00	0.43	0.10	1.00
Scrapers	277,416,772	196,687,046	0.72	5.00	8.70	1.06	0.00	0.43	0.10	1.00
Paving Equipment	101,343,998	71,876,903	1.04	4.60	11.01	0.75	0.00	0.43	0.10	1.00
Surfacing Equipment	0	0	0.00	0.00	0.00	0.00	0.00	0.43	0.10	1.00
Signal Boards	5,921,078	4,198,787	1.24	5.00	8.00	0.82	0.00	0.43	0.10	1.00
Tranchers	78,805,063	55,868,208	1.59	9.14	10.02	1.19	0.00	0.43	0.10	1.00
Bore/Drill Rigs	41,024,096	29,164,590	1.46	9.20	11.01	1.19	0.00	0.43	0.10	1.00
Excavators	513,812,364	364,486,131	0.72	5.20	10.75	1.19	0.00	0.43	0.10	1.00
Concrete/Industrial Saws	253,299	211,083	1.46	9.20	11.01	1.19	0.00	0.43	0.10	1.00
Cement and Mortar Mixers	491,661	349,450	1.04	4.60	11.01	0.75	0.00	0.43	0.10	1.00
Cranes	657,766,510	466,446,920	1.30	4.20	10.30	1.19	0.00	0.43	0.10	1.00
Graders	310,545,637	220,187,357	1.59	3.80	9.60	0.86	0.00	0.43	0.10	1.00
Off-Highway Trucks	663,130,274	469,924,177	0.87	2.80	9.60	0.72	0.00	0.43	0.10	1.00
Crushing/Proc. Equipment	53,634,666	38,029,879	1.46	9.20	11.01	1.19	0.00	0.43	0.10	1.00
Rough Terrain Forklifts	157,262,698	111,567,816	1.73	10.00	8.00	1.31	0.00	0.43	0.10	1.00
Rubber Tired Loaders	1,045,582,352	741,450,455	0.87	4.80	10.30	1.08	0.00	0.43	0.10	1.00
Rubber Tired Dozers	134,773,536	95,812,346	0.87	2.80	9.60	0.61	0.00	0.43	0.10	1.00
Tractors/Loaders/Backhoes	652,357,493	462,632,951	1.45	6.80	10.10	0.91	0.00	0.43	0.10	1.00
Crawler Tractors	1,741,373,211	1,234,908,984	1.30	4.80	10.30	0.95	0.00	0.43	0.10	1.00
Skid Steer Loaders	165,505,671	117,362,720	2.16	9.00	9.60	1.19	0.00	0.43	0.10	1.00
Off-Highway Tractors	534,150,795	378,956,710	2.53	14.68	11.91	1.64	0.00	0.43	0.10	1.00
Dumpers/Tenders	47,934	41,910	0.87	2.80	9.60	1.19	0.00	0.43	0.10	1.00
Other Construction Equipment	59,060,124	41,846,485	1.46	9.20	11.01	1.19	0.00	0.43	0.10	1.00
2-Wheel Tractors	0	0	0.00	0.00	0.00	0.00	0.00	0.50	0.06	1.00
Agricultural Tractors	366,932,626	32,408,829	2.29	8.94	11.21	1.65	0.00	0.50	0.06	1.00
Agricultural Mowers	0	0	0.00	0.00	0.00	0.00	0.00	0.50	0.06	1.00
Combines	15,253,193	1,362,403	1.30	4.20	11.50	1.93	0.00	0.50	0.06	1.00
Sprayers	164,133	16,334	2.29	3.78	7.78	1.20	0.00	0.50	0.06	1.00
Balers	273,031	1,911	2.29	3.78	7.78	1.20	0.00	0.50	0.06	1.00
Tillers >5 HP	0	0	0.00	5.00	8.00	0.82	0.00	0.50	0.06	1.00
Swathers	12,514,058	1,129,115	0.93	2.10	11.50	1.20	0.00	0.50	0.06	1.00
Hydro Power Units	134,986	1,877	2.29	3.78	7.78	1.20	0.00	0.50	0.06	1.00
Other Agricultural Equipment	834,506	61,884	1.88	4.37	11.12	1.20	0.00	0.50	0.06	1.00
Chainsaws >4 HP	0	0	0.00	0.00	0.00	0.00	0.00	0.25	0.25	1.00
Shredders >5 HP	0	0	0.00	0.00	0.00	0.00	0.00	0.25	0.25	1.00
Skidders	0	0	0.00	5.20	11.30	1.19	0.00	0.25	0.25	1.00
Fellers/Bunchers	0	0	0.00	5.20	11.30	1.19	0.00	0.25	0.25	1.00

(CONTINUED)

#...Same for CO, NOx, and PM

CMSA AMS INPUT PARAMETERS INVENTORY A+B/2 - DIESEL EQUIPMENT
NEW Nonattainment Boundaries

CMSA: NEW YORK

EQUIPMENT TYPES	Adj Fctr (Saturday)	Adj Fctr (Sunday)	Op Prmtr (Days/Week)	Op Prmtr (Weeks/Year)
Trimmers/Edgers/Brush Cutters	1.00	1.00	7.00	52.00
Lawn Mowers	1.00	1.00	7.00	52.00
Leaf Blowers/Vacuums	1.00	1.00	7.00	52.00
Rear Engine Riding Mowers	1.00	1.00	7.00	52.00
Front Mowers	1.00	1.00	7.00	52.00
Chainsaws <4 HP	1.00	1.00	7.00	52.00
Shredders <5 HP	1.00	1.00	7.00	52.00
Tillers <5 HP	1.00	1.00	7.00	52.00
Lawn & Garden Tractors	1.00	1.00	7.00	52.00
Wood Splitters	1.00	1.00	7.00	52.00
Snowblowers	1.00	1.00	7.00	52.00
Chippers/Stump Grinders	1.00	1.00	7.00	52.00
Commercial Turf Equipment	1.00	1.00	7.00	52.00
Other Lawn & Garden Equipment	1.00	1.00	7.00	52.00
Aircraft Support Equipment	1.00	1.00	7.00	52.00
Terminal Tractors	1.00	1.00	7.00	52.00
All Terrain Vehicles (ATVs)	1.00	1.00	7.00	52.00
Minibikes	1.00	1.00	7.00	52.00
Off-Road Motorcycles	1.00	1.00	7.00	52.00
Golf Carts	1.00	1.00	7.00	52.00
Snowmobiles	1.00	1.00	7.00	52.00
Specialty Vehicles Carts	1.00	1.00	7.00	52.00
Vessels w/Inboard Engines	1.00	1.00	7.00	52.00
Vessels w/Outboard Engines	1.00	1.00	7.00	52.00
Vessels w/Sterndrive Engines	1.00	1.00	7.00	52.00
Sailboat Auxiliary Inboard Engines	1.00	1.00	7.00	52.00
Sailboat Auxiliary Outboard Engines	1.00	1.00	7.00	52.00
Generator Sets <50 HP	1.00	1.00	7.00	52.00
Pumps <50 HP	1.00	1.00	7.00	52.00
Air Compressors <50 HP	1.00	1.00	7.00	52.00
Gas Compressors <50 HP	1.00	1.00	7.00	52.00
Welders <50 HP	1.00	1.00	7.00	52.00
Pressure Washers <50 HP	1.00	1.00	7.00	52.00
Aerial Lifts	1.00	1.00	7.00	52.00
Forklifts	1.00	1.00	7.00	52.00
Sweepers/Scrubbers	1.00	1.00	7.00	52.00
Other General Industrial Equipment	1.00	1.00	7.00	52.00
Other Material Handling Equipment	1.00	1.00	7.00	52.00
Asphalt Pavers	1.00	1.00	7.00	52.00
Tampers/Rammers	1.00	1.00	7.00	52.00
Plate Compactors	1.00	1.00	7.00	52.00
Concrete Pavers	1.00	1.00	7.00	52.00
Rollers	1.00	1.00	7.00	52.00
Scrapers	1.00	1.00	7.00	52.00
Paving Equipment	1.00	1.00	7.00	52.00
Surfacing Equipment	1.00	1.00	7.00	52.00
Signal Boards	1.00	1.00	7.00	52.00
Trenchers	1.00	1.00	7.00	52.00
Bore/Drill Rigs	1.00	1.00	7.00	52.00
Excavators	1.00	1.00	7.00	52.00
Concrete/Industrial Saws	1.00	1.00	7.00	52.00
Cement and Mortar Mixers	1.00	1.00	7.00	52.00
Cranes	1.00	1.00	7.00	52.00
Graders	1.00	1.00	7.00	52.00
Off-Highway Trucks	1.00	1.00	7.00	52.00
Crushing/Proc. Equipment	1.00	1.00	7.00	52.00
Rough Terrain Forklifts	1.00	1.00	7.00	52.00
Rubber Tired Loaders	1.00	1.00	7.00	52.00
Rubber Tired Dozers	1.00	1.00	7.00	52.00
Tractors/Loaders/Backhoes	1.00	1.00	7.00	52.00
Crawler Tractors	1.00	1.00	7.00	52.00
Skid Steer Loaders	1.00	1.00	7.00	52.00
Off-Highway Tractors	1.00	1.00	7.00	52.00
Dumpers/Tenders	1.00	1.00	7.00	52.00
Other Construction Equipment	1.00	1.00	7.00	52.00
2-Wheel Tractors	1.00	1.00	7.00	52.00
Agricultural Tractors	1.00	1.00	7.00	52.00
Agricultural Mowers	1.00	1.00	7.00	52.00
Combines	1.00	1.00	7.00	52.00
Sprayers	1.00	1.00	7.00	52.00
Balers	1.00	1.00	7.00	52.00
Tillers >5 HP	1.00	1.00	7.00	52.00
Swathers	1.00	1.00	7.00	52.00
Hydro Power Units	1.00	1.00	7.00	52.00
Other Agricultural Equipment	1.00	1.00	7.00	52.00
Chainsaws >4 HP	1.00	1.00	7.00	52.00
Shredders >5 HP	1.00	1.00	7.00	52.00
Skidders	1.00	1.00	7.00	52.00
Fellers/Bunchers	1.00	1.00	7.00	52.00

Appendix 4-B

Equipment Categories

Category 1, lawn and garden equipment, includes 14 types of equipment.[218, 219] These are mostly powered by small gasoline engines having less than 25 horsepower. Examples of these are listed below.

- lawnmowers
- trimmers
- edgers
- brush cutters
- chainsaws

Some larger lawn and garden equipment types, such as those listed below, have diesel engines.

- chippers/grinders
- rear engine riding mowers
- wood splitters
- commercial turf equipment

The main source of data used by EPA in its nonroad report to derive the emission factors for gasoline engines in this category was the California Air Resources Board (CARB) Technical Support Document (TSD).[220] CARB relied on testing done by manufacturers, Southwest Research Institute, and Heiden Associates for the Portable Power Equipment Manufacturers Association (PPEMA). Since there were no emissions data available for the small percentage of lawn and garden equipment that have diesel engines (rear engine riding mowers, lawn and garden tractors, wood splitters/chippers, stump grinders, and commercial turf equipment), the emission factors for diesel light commercial equipment (less than 50 horsepower) were considered to be the substitutes for use in the nonroad equipment study. Please refer to tables I-3 and I-4 in the appendix of the nonroad report for the actual emission factors. The activity indicators used by Energy and Environmental Analysis, Inc. (EEA) for developing lawn and garden equipment populations included the number of single family housing units in a given area and SIC 078 - Landscape and Horticultural Services (Employees).

---

[218] U.S. Environmental Protection Agency. Nonroad Engine and Vehicle Emission Study. Report and Appendices. EPA-21A-2001. Washington, D.C.. Office of Air and Radiation. November 1991.

[219] Energy and Environmental Analysis, Inc. Methodology To Estimate Nonroad Equipment Populations By Nonattainment Areas. prepared for U.S. Environmental Protection Agency. September 1991.

[220] California Air Resources Board. Technical Support Documents for California Exhaust Emission Standards and Test Procedures for 1994 and Subsequent Model Year Utility and Lawn and Garden Equipment Engines. attachment C to CARB Mailout #90-64. El Monte, California: State of California. December 1991.

The agricultural equipment category is comprised of 11 types of equipment. Examples of these are listed below.

- tractors
- combines
- swathers
- fertilizer spreaders
- agricultural mowers (> 5 h.p.)
- cotton pickers
- balers
- tillers
- sprayers
- harvesters
- strippers

Some specialized equipment, such as cotton pickers and strippers have relatively small populations and can only be found in certain areas of the country. For agricultural equipment using gasoline, the emission factors used to calculate emission inventories were from the Fourth Edition of AP-42.[221] The factors found in AP-42 were selected because no other sources had specific emission factors by equipment type for gasoline nonroad equipment. For particulate emission factors for gasoline equipment, a value of 1.64 lb./1000 gallons was used. For diesel agricultural equipment, emission factors were taken from a report by Environmental Research and Technology, Inc. (EAT) entitled, "Feasibility, Cost, and Air Quality Impact of Potential Emission Control Requirements on Farm, Construction, and Industrial Equipment in California".[222] Emission factors were given by equipment category. Emission factors for particulate matter were taken from AP-42, Fourth Edition. Table I-07 in the nonroad report presents the chosen emission factors from EAT in grams/horsepower-hour, and table I-08 gives the emission factors converted to pounds/1000 gallons of fuel. EEA used data from the 1987 Census of Agriculture to derive activity indicators for agricultural equipment. SIC 07 - Agricultural Services (Employees), modified to exclude SIC 78 (used for the lawn and garden category), was found to be the best activity indicator for this category.

---

[221] U.S. Environmental Protection Agency. Compilation of Air Pollutant Emission Factors, Volume II. EPA Report No. AP-42. Fourth Edition. Research Triangle Park, North Carolina. Office of Air Quality Planning and Standards. September 1985.

[222] Environmental Research and Technology, Inc. Feasibility, Cost, and Air Quality Impact of Potential Emission Control Requirements on Farm, Construction, and Industrial Equipment in California. Document PA841, sponsored by the Farm and Industrial Equipment Institute, Engine Manufacturers Association, and Construction Industry Manufacturers Association. May 1982.

The logging equipment category includes the following equipments types.

- chainsaws (> 5 h.p.)
- shredders (> 5 h.p.)
- skidders
- delimbers
- fellers
- bunchers
- other miscellaneous equipment

Significant amounts of logging equipment can only be found in parts of the United States where large-scale logging operations take place, such as the Pacific Northwest. Emission factors for this category were taken from the CARB Technical Support Document and data submitted to EPA by the Engine Manufacturers Association (EMA).[223] SIC 241 (Employees) was chosen by EEA as the best activity indicator to distribute logging equipment populations.

Light commercial equipment is categorized as having engines under 50 horsepower. This equipment is used in various wholesaling, retailing, and manufacturing capacities. Examples of this category include various types of the following equipment.

- electrical generators
- pumps
- compressors

Emission factors recommended by SwRI[224] and contained in a report produced by Radian Corporation[225] were used for equipment fueled with diesel in this category. For equipment using gasoline, emission factors for utility and lawn and garden equipment from the CARB Technical Support Document were used.

Somewhat related to the light commercial equipment category, the industrial equipment category includes equipment used in manufacturing and warehousing operations. This category includes the types of equipment listed below.

---

[223] Ingalls. M.N. Nonroad Emission Factors of Air Toxics. Report No. 08-3426-005. San Antonio. Texas. Southwest Research Institute. February 1991.

[224] Weaver. C.S. Feasibility and Cost Effectiveness of Controlling Emissions from Diesel Engines in Rail, Marine, Construction, Farm, and Other Mobile Off-Highway Equipment. Final Report for U.S. Environmental Protection Agency. Sacramento. California. Radian Corporation. February 1988.

[225] Hare. C.T., and K.J. Springer. Exhaust Emissions from Uncontrolled Vehicles and Related Equipment Using Internal Combustion Engines. Final Report Part 5. Heavy-Duty Farm. Construction. and Industrial Engines. San Antonio. Texas. Southwest Research Institute. October 1973.

- forklifts
- boom lifts
- scissor lifts
- industrial sweepers
- scrubbers
- blowers
- vacuums
- scrapers
- winches
- hoists
- conveyors

For both gasoline and diesel industrial equipment, emission factors found in Volume I of AP-42 were used. These factors were developed by SwRI in 1973.[226] EEA use total wholesale activity (number of establishments) as the indicator for the distribution of light commercial equipment populations.

The category of construction equipment includes 27 kinds of equipment.[227, 228] These types are listed below.

- paving equipment
- roofing equipment
- signal boards
- cable layers
- drilling rigs
- excavators
- industrial saws
- cranes
- cement/mortar mixers
- crushing/processing equipment
- dozers
- backhoes
- loaders
- tractors

The emission factors used for diesel construction equipment were derived from data from EMA. For some types of diesel equipment, EMA emission factors were unavailable. In these cases, EPA used factors from AP-42, Fourth Edition, which were originally derive from the EAT report mentioned earlier.[229] For the actual emission factors, please refer to Table I-09, which compares the AP-42 and the EMA emission factors, in the appendix of the EPA nonroad report. For gasoline construction equipment, the emission factors which EPA selected came from the fourth edition of AP-42. For particulate matter and aldehyde

---

[226] California Air Resources Board. Mailout #90-58. El Monte. California. State of California. September 7. 1990.

[227] U.S. Environmental Protection Agency. Nonroad Engine and Vehicle Emission Study. Report and Appendices. EPA-21A-2001. Washington. D.C.. Office of Air and Radiation. November 1991.

[228] Energy and Environmental Analysis. Inc. Methodology To Estimate Nonroad Equipment Populations By Nonattainment Areas. prepared for U.S. Environmental Protection Agency. September 1991.

[229] Environmental Research and Technology. Inc. Feasibility. Cost. and Air Quality Impact of Potential Emission Control Requirements on Farm. Construction. and Industrial Equipment in California. Document PA841. sponsored by the Farm and Industrial Equipment Institute. Engine Manufacturers Association. and Construction Industry Manufacturers Association. May 1982.

construction equipment emission factors, EPA used the gasoline and diesel agricultural equipment emission factors. Local construction activity was used by EEA to determine local construction equipment populations.

For airport equipment, only equipment owned by each airline was included (EEA). Airport equipment owned and operated by the airport authority was inventoried within the other categories. This was done to prevent double counting. This category also does not include aircraft engines, which are addressed in Chapter 5. Examples of this equipment are listed below.

- load lifters
- de-icing equipment
- heating units
- utility service equipment
- starting units
- baggage conveyors
- towing/pushback tractors
- misc. service vehicles

The emission factors for industrial equipment were also applied to airport service equipment. Air carrier operations, including certified carriers, air taxis, supplemental air carriers, commercial operators of large aircraft, and air travel clubs, were used by EEA as the activity indicator for determining local airport equipment populations.

The recreational category includes a varied array of equipment. Examples of these are listed below.

- all terrain vehicles (ATVs)
- minibikes
- snow and ice maintenance equipment,
- go-carts
- gasoline powered golf carts
- snowmobiles
- industrial personnel carriers/ATVs

Some equipment in this category is limited to certain specific areas or regions. Golf carts are mostly found in resorts and golf courses. Snowmobiles and snow/ice maintenance equipment are mostly found in areas that have a significant amount of snowfall. Emission factors developed by CARB for off-road motorcycles with both 2- and 4-stroke engines were used by EPA. EPA also applied these emission factors to all-terrain vehicles, minibikes, golf carts, and specialty vehicle carts.[230] For snowmobiles, very little data exist on emission rates. EPA is considering using emission factors found in AP-42, which were derived from

[230] Hare, C.T., and K.J. Springer. Exhaust Emissions from Uncontrolled Vehicles and Related Equipment Using Internal Combustion Engines. Final Report. Part 7. Snowmobiles. San Antonio, Texas. Southwest Research Institute. April 1974.

testing done by SwRI in 1974.[231] SIC 557 - Motorcycle Dealers (Establishments) was the primary indicator used by EEA to determine local recreational equipment populations. For some areas SIC 557 had no data. In such cases, SIC 55 - Automotive Dealers and Service Stations (Employees) - was used as a substitute.

Five types of recreational marine vessels are addressed in the nonroad report. These are listed below.

- vessels with inboard engines
- vessels with outboard engines
- vessels with sterndrive engines
- sailboats with auxiliary outboard engines
- sailboats with auxiliary inboard engines

Emission factors for outboard engines were derived from test data supplied to EPA by the National Marine Manufacturers Association, which tested 25 two-stroke and three four-stroke outboard engines. Please refer to Tables I-11a and I-11b in the November 1991 EPA "Nonroad Engine and Vehicle Emission Study" for further information. For four-stroke outboards, emission factors recommended by SwRI were used for particulate matter emissions.[232] Since no data were available for 2-stroke outboard engine particulate matter emissions, EPA used emission factors from the CARB Technical Support Document for utility and lawn/garden equipment as approximations.[233] For inboard/sterndrive gasoline engines, EPA derived emission factors on the basis of test data on three 4-stroke gasoline marine inboard/sterndrive engines supplied by NMMA (See table I-11c in the appendix of the EPA nonroad report). The particulate emission factor used was 1.64 lb./1000 gal (0.74 grams/gallon). Please refer to Section 1.2.2 of Appendix I of the EPA November 1991 nonroad study for more information. EPA used test data on a small diesel sailboat inboard and three large diesel inboard engines, which NMMA supplied, as the basis for calculating emission factors for inboard diesel engines. Please refer to table I-11d in appendix of the EPA nonroad study for more information. The activity indicator that EEA used to distribute marine engine populations at the county level consisted of taking a ratio of the water surface area of the given county to the total water surface area of the state in which the county is located. This includes miles of public beach with an assumed operating distance from shore of one mile, as well as inland waterways. Data on miles of public beach were found in the

---

[231] Booz Allen & Hamilton, Inc. Commercial Marine Vessel Contributions to Emission Inventories. Final Report to Environmental Protection Agency. Los Angeles, California. October 7, 1991.

[232] U.S. Environmental Protection Agency. Designation of Areas for Air Quality Planning Purposes. 40 CFR Part 81. Final Rule. Washington, D.C., Office of Air and Radiation. Novemeber 6, 1991.

[233] Energy and Environmental Analysis, Inc. Methodology To Estimate Nonroad Engine and Vehicle Emission Inventories At the County and Sub-County Level. Draft Report to the Environmental Protection Agency. Arlington, Virginia. February 11, 1992.

National Oceanic and Atmospheric Administration's (NOAA) National Estuarine Inventory: Data Atlas, 1988. Data on inland water covered surface area were derived from a census report entitled, Area Measurements Reports, GE-20, No. 1, 1970.

Commercial marine vessels can be subdivided into three categories, including ocean-going, harbor, and fishing vessels. These vessels have similar characteristics of size, speed, engine design, and distance traveled. Booz Allen & Hamilton developed the commercial marine vessel inventories and emission factors under contract to EPA for the EPA nonroad study. These are contained in The Booz Allen & Hamilton final report.[234] In addition, the emission factors are contained in tables I-12a and I-12b in Appendix I of the EPA nonroad report. In developing commercial marine populations for six ports (Baltimore, Baton Rouge, Houston-Galveston, New York-New Jersey, Philadelphia, and Seattle-Tacoma), Booz Allen & Hamilton requested data from several sources, including port authorities, Lloyds exchange, local marine exchanges, bar pilots associations, maritime trade organizations, state regulatory and licensing boards, and the U.S. Army Corps of Engineers. For the ports of Houston-Galveston and Baton-Rouge, inventories were based on data published in Waterborne Commerce of the United States, Calendar Year 1988.[235] For fishing vessel populations, data supplied by the National Marine Fisheries Service was used.[236] For ports in non-attainment areas not addressed in the Booz Allen & Hamilton report, EPA relied on data from SIP inventories and the 1985 National Emissions Report.[237]

---

[234] Booz Allen & Hamilton, Inc. Commercial Marine Vessel Contributions to Emission Inventories. Final Report to Environmental Protection Agency. Los Angeles, California. October 7, 1991.

[235] U.S. Army Corps. of Engineers. Waterborne Commerce of the United States. Calendar Year 1988. Water Resources Support Center.

[236] U.S. Department of Commerce. National Oceanic and Atmospheric Administration. National Marine Fisheries Service. Fisheries of the United States, 1990. Washington D.C., U.S. Government Printing Office. May 1991.

[237] U.S. Environmental Protection Agency. 1985 National Emissions Report. Research Triangle Park, NC. Office of Air Quality Planning and Standards. March 1991.

Appendix 4-C

Sample Inventory Calculation

Sample OMS and EEA Inventory Calculation for VOC

Exhaust

(g/hp-hr) x (rated hp) x (percent of rated hp typically used)

x (hrs/yr per engine) x (equipment population) x (ton/g)

= (tons/yr)

Evaporative

(g/day) x (229 days/yr)* x (equipment population) x (ton/g) =

(tons/yr)

* Evaporative diurnal VOC emissions are assumed to occur 229 days/year, which includes each day of the ozone season, no winter days, and most other days. Future OMS work will determine emission factors for hot soak, running loss, and resting loss emissions.

Refueling

Refueling emissions are the sum of the spillage and vapor displacement emissions. They are calculated on a g/gal basis and then, as appropriate, converted to a g/hp-hr or g/hr basis to be in the same unit as the exhaust emission factors. Please see Appendix I (pages 26-31) of the EPA nonroad study for details on the calculations. The example below is shown for a g/gal emission factor.

(g/gal) x (gal fuel used) x (equipment population) x (ton/g)

= (tons/yr)

The total of these three emission categories are combined to give total annual VOC emissions as shown below.

Total annual VOC emissions = Exhaust VOC + Evaporative VOC + Refueling VOC

Annual emissions for CO and particulates are calculated using just the exhaust portion of this example.

The total annual emissions (tons/year) can be apportioned to tons/summer day or tons/winter day by use of one of the conversion factors developed by EEA.

SAF (tons per summer day/tons per year)
SAF (tons per winter day/tons per year)

These factors consider different fractions of summer and winter operations for the nine equipment categories in three different geographical areas of the country (northern, central, and southern). Thus, the factors vary from area to area.

By use of these conversion factors, the following inventories are obtained.

VOC tons per summer day
NOx tons per summer day
CO tons per summer day (O_3 area)
CO tons per winter day (CO area)
Particulate tons per summer day
Particulate tons per winter day

The conversion factors can also be applied to particulates if one is considering the 24-hr. particulate National Ambient Air Quality Standard instead of the annual average.

Appendix 4-D

Inventory Request Form

Non-Road Mobile Sources Inventory
Guidance Request Form
Please Print or Type

Requester: _____

Agency: _____

Street: _____

City, ST, Zip: _____

Fed.Exp.Acct: _____ Telephone: _____

Nonattainment
Areas Under
Your Agency: _____

_____

Materials Requested

_____ New York - New Jersey inventory example

_____ Inventory disks for areas listed above
(If among 33 areas analyzed by EPA - see back)

_____ Booz-Allen study on commercial vessels in six areas
(Oct. 1991)

_____ Inventories for others among the 33 areas, for
purposes of population-ratio estimates (limit 5)

_____ _____ _____

_____ _____

Return this form to: Natalie Dobie
U.S. EPA
2565 Plymouth Rd.
Ann Arbor, MI 48105

Voice: (313) 741-7812
FAX: (313) 668-4368

Areas Available

1.	Anchorage	AK
2.	Atlanta	GA
3.	Baltimore	MD
4.	Baton Rouge	LA
5.	Beaumont-Port Arthur	TX
6.	Boston-Lawrence-Worcester	MA
7.	Chicago-Gary-Lake County	IL-IN-WI
8.	Cleveland-Akron-Lorain	OH
9.	Denver-Boulder	CO
10.	El Paso	TX
11.	Hartford-New Britain-Middletown-Bristol	CT
12.	Houston-Galveston-Brazoria	TX
13.	Las Vegas	NV
14.	Miami-Fort Lauderdale	FL
15.	Milwaukee-Racine	WI
16.	Minneapolis-St. Paul	MN
17.	Muskegon	MI
18.	New York-Northern New Jersey-Long Island	NY-NJ-CT
19.	Philadelphia-Wilmington-Trenton	PA-NJ-DE-MD
20.	Phoenix	AZ
21.	Portsmouth-Dover-Rochester	NH
22.	Providence	RI
23.	Provo-Orem	UT
24.	San Diego	CA
25.	San Joaquin Valley Air Basin	CA
26.	Seattle-Tacoma	WA
27.	Sheboygan	WI
28.	South Coast Air Basin	CA
29.	Spokane	WA
30.	Springfield	MA
31.	St. Louis	MO
32.	Tucson	AZ
33.	Washington	DC

5.0 EMISSIONS FROM AIRCRAFT

This chapter describes the procedure for calculating emissions from civilian and military aircraft within an inventory area. The basic methodology determines aircraft fleet make-up and level of activity and then calculates air pollutant emissions on an annual basis. Variations to the methodology, which account for seasonal changes or specific operational considerations, are discussed. Changes expected in the fleet in the future and the effect on emissions are also briefly described. Finally, a method for converting total hydrocarbon (THC) emissions to volatile organic compound (VOC) emissions is presented at the end of the chapter.

The inventory methodology and emission factors have been updated since the last edition of this report. This chapter also updates the emission factor information that appears in Compilation of Air Pollutant Emission Factors, Fourth Edition and Supplements, AP-42.[238] Subsequent to the publication of this document, AP-42 will be formally updated and may include some additional data, primarily on general aviation and military aircraft, which was unavailable when this report was prepared.

5.1 OVERVIEW OF THE INVENTORY METHODOLOGY

Preparing an emissions inventory for aircraft focuses on the emission characteristics of this source relative to the vertical column of air that ultimately affects ground level pollutant concentrations. This portion of the atmosphere, which begins at the earth's surface and is simulated in air quality models, is often referred to as the mixing zone. The aircraft operations of interest within this layer are defined as the landing and takeoff (LTO) cycle. The cycle begins when the aircraft approaches the airport on its descent from cruising altitude, lands, and taxis to the gate. It continues as the aircraft taxis back out to the runway for subsequent takeoff and climbout as it heads back up to cruising altitude. Thus, the five specific operating modes in an LTO are:

- Approach
- Taxi/idle-in
- Taxi/idle-out
- Takeoff
- Climbout

[238] Compilation of Air Pollutant Emission Factors, Volume II: Mobile Sources. AP-42. U.S. Environmental Protection Agency. Ann Arbor. Michigan. September. 1985. (Aircraft data from February 1980.)

Most aircraft go through a similar sequence during a complete operating cycle. Helicopters may combine certain modes such as takeoff and climbout.5.1.1 Factors Affecting Emissions

The LTO cycle provides a basis for calculating aircraft emissions. During each mode of operation, the aircraft engines operate at a fairly standard power setting for a given aircraft category. Emissions for one complete cycle for a given aircraft can be calculated by knowing emission factors for specific aircraft engines at those power settings. Then, if the activity of all aircraft in the modeling zone can be determined for the inventory period, the total emissions can be calculated. Each of the dominant factors that affect the emissions from this source is discussed below.

5.1.1.1 Aircraft Categorization

For a single LTO cycle, aircraft emissions vary considerably depending on the category of aircraft and the resulting typical flight profile. Aircraft can be categorized by use. Commercial aircraft include those used for scheduled service transporting passengers, freight, or both. Air taxis also fly scheduled service carrying passengers and/or freight but usually are smaller aircraft and operate on a more limited basis than the commercial carriers. Business aircraft support business travel, usually on an unscheduled basis, and general aviation includes most other non-military aircraft used for recreational flying, personal transportation, and various other activities.

For the purpose of creating an emissions inventory, business aircraft are combined with general aviation aircraft because of their similar size, use frequency, and operating profiles. In this inventory methodology they are referred to simply as general aviation. Similarly, air taxis are treated much like the general aviation category because they are typically the same types of aircraft. Military aircraft cover a wide range of sizes, uses, and operating missions. While they often are similar to civil aircraft, they are handled separately because they typically operate exclusively out of military air bases and frequently have distinctive flight profiles. Helicopters, or rotary wing aircraft, can be found in each of the categories. Their operation is distinct because they do not always operate from an airport but may land and takeoff from a heliport at a hospital, police station, or similarly dispersed location. Military rotorcraft are included in the military category and non-military rotorcraft are included in the general aviation category since information on size and number are usually found in common sources. However, they are combined into a single group for calculating emissions since their flight profiles are similar.

Commercial aircraft typically are the largest source of aircraft emissions. Although they make up less than half of all aircraft in operation around a metropolitan area their emissions usually represent a large fraction of the total because of their size and operating frequency. This may not hold true, of course, for a city with a disproportionate amount of military activity or a city with no major civil airports.

5.1.1.2 Pollutant Emissions

Aircraft pollutants of significance are hydrocarbon (HC), carbon monoxide (CO), oxides of nitrogen (NO_x), sulfur dioxide (SO_2), and particulates (PM_{10}). The factors that determine the quantity of pollutant emitted are the emission index for each operating mode (pounds of pollutant per 1000 pounds of fuel consumed), the fuel consumption rate, and the duration of each operating mode. HC and CO emission indexes are very high during the taxi/idle phases when aircraft engines are at low power and operate at less than optimum efficiency. The emission indexes fall as the aircraft moves into the higher power operating modes of the LTO cycle. Thus, operation in the taxi/idle mode, when aircraft are on the ground at low power, is a significant factor in calculating total HC and CO emissions. For areas which are most concerned about the contribution of aircraft to the inventory of HC and CO, special attention should be paid to the time the aircraft operate in the taxi/idle modes.

NO_x emissions, on the other hand, are low when engine power and combustion temperature are low but increase as the power level is increased and combustion temperature rises. Therefore the takeoff and climbout modes have the highest NO_x emission rates. If NO_x is a primary concern for the inventory area, special effort should focus on determining an accurate height of the mixing layer, which affects the operating duration of climbout.

Sulfur emissions typically are not measured when aircraft engines are tested. In evaluating sulfur emissions, it is assumed that all sulfur in the fuel combines with oxygen during combustion to form sulfur dioxide. Thus, sulfur dioxide emission rates are highest during takeoff and climbout when fuel consumption rates are high. Nationally the sulfur content of fuel remains fairly constant from year to year at about 0.05% wt. for commercial jet fuel, 0.025% wt. for military fuel, and 0.006% wt for aviation gasoline. This is the basis for the sulfur dioxide emission indexes in the tables included in this methodology. If the sulfur content of fuel varies significantly on a local basis, the emission index can be adjusted according to a ratio of the local value to the national value.

Particulates form as a result of incomplete combustion. Particulate emission rates are somewhat higher at low power rates than at high power rates since combustion efficiency improves at higher engine power. However, particulate emissions are highest during takeoff and climbout because the fuel flow rate also is high. It is particularly difficult to estimate the emissions of this pollutant. Direct measurement of particulate emissions from aircraft engines

typically are not available, although emission of visible smoke is reported as part of the engine certification procedure. Particulate emission factors for only a few aircraft engines are included in this chapter.

5.1.1.3 Aircraft Engines

The aircraft powerplant is the source of emissions of the key pollutants that result from fuel combustion. Emission rates vary depending on the fuel consumption rate and engine specific design factors. In 1984, EPA established standards for HC emissions. In developing the emission limits, EPA defined an operating regimen to standardize the engine certification testing procedure and method for determining engine HC emissions. The standard applies to jet engines over 6,000 lbs-thrust and emissions are calculated based on a specific LTO cycle. EPA considered in-use engine deterioration when the standards were developed but concluded that, because of the high levels of maintenance of aircraft engines for reasons of safety and fuel economy, emission performance would not deteriorate significantly. The operating parameters used in the standard for the LTO cycle can be used as default values in calculating emissions when more specific information is not known. These default values are defined in later sections of this methodology.

When the standards went into effect, some engines in production could already meet them due to design changes made previously for improved fuel efficiency. Other engines had to be redesigned to reduce their HC emissions so that they could remain in production. In-service engines were not required to be retrofitted in the normal course of periodic servicing and rebuilding. These older engines, many of which remain in service, have HC emissions that exceed the standard. New engine designs, produced since the standards went into effect, have HC emissions much lower than the standards. As a result of design changes made to the engines that meet the HC standard, emissions of CO also generally went down while NO_x emissions tended to increased. However, the change in these pollutants was much less dramatic than the decrease in hydrocarbons. The smoke number for the newer engines also is lower due to specific design changes intended to reduce smoke production, which is regulated by EPA.

5.1.1.4 Operating Modes

During the LTO cycle, aircraft operate for different periods of time in various modes depending on their particular category, the local meteorological conditions, and operational considerations at a given airport. The "Time-In-Mode," or TIM, as used in this methodology, takes these factors into consideration. Table 5-1 shows representative LTO cycle times for several aircraft categories.

TABLE 5-1: DEFAULT TIME-IN-MODE
FOR VARIOUS AIRCRAFT CATEGORIES[1]

Aircraft	Time in Mode (Minutes) Taxi/ Idle-out	Takeoff	Climbout	Approach	Taxi/ Idle-in	Total
CIVIL[2]						
Commercial Carrier						
Jumbo, long and medium range jet	19.0	0.7	2.2	4.0	7.0	32.9
Turboprop	19.0	0.5	2.5	4.5	7.0	33.5
Transport-piston	6.5	0.6	5.0	4.6	6.5	23.2
General Aviation						
Business jet	6.5	0.4	0.5	1.6	6.5	15.5
Turboprop	19.0	0.5	2.5	4.5	7.0	33.5
Piston	12.0	0.3	5.0	6.0	4.0	27.3
Helicopter	3.5	-	6.5	6.5	3.5	20.0
MILITARY[3]						
Combat[4]						
USAF	18.5	0.4	0.8	3.5	11.3	34.5
USN[5]	6.5	0.4	0.5	1.6	6.5	15.5
Trainer - Turbine						
USAF T-38	12.8	0.4	0.9	3.8	6.4	24.3
USAF general	6.8	0.5	1.4	4.0	4.4	17.1
USN[5]	6.5	0.4	0.5	1.6	6.5	15.5
Transport - Turbine[6]						
USAF general	9.2	0.4	1.2	5.1	6.7	22.6
USN	19.0	0.5	2.5	4.5	7.0	33.5
USAF B-52 and KC-135	32.8	0.7	1.6	5.2	14.9	55.2
Military - Piston	6.5	0.6	5.0	4.6	6.5	23.2
Military - Helicopter	8.0	-	6.8	6.8	7.0	28.6

TABLE 5-1: DEFAULT TIME-IN-MODE
FOR VARIOUS AIRCRAFT CATEGORIES[1]
(Concluded)

[1] SOURCE: AP-42, Compilation of Air Pollutant Emission Factors, Volume II: Mobile Sources, U.S. Environmental Protection Agency, Ann Arbor, Michigan, September, 1985. (Aircraft data from February 1980).

[2] Civil aircraft data is for large congested metropolitan airports.

[3] USAF - U.S. Air Force, USN - U.S. Navy.

[4] Fighters and attack aircraft only.

[5] Time-in mode is highly variable. Taxi/idle out and in times as high as 25 and 17 minutes, respectively, have been noted. Use local data base if possible.

[6] Includes all turbine aircraft not specified elsewhere (i.e., transport, cargo, observation, patrol, antisubmarine, early warning, and utility).

Duration in approach and climbout depends largely on the local meteorology. Since the period of interest is during operation of the aircraft within the air modeling zone, the inversion layer thickness determines how long the aircraft is in this zone. The inversion layer thickness is also known as the mixing height or mixing zone since the air in this layer is completely mixed and pollutants emitted anywhere within the layer will be carried down to ground level. When the aircraft is above the mixing layer, whether on descent or when climbing to cruising altitude, the emissions tend to disperse, rather than being trapped by the inversion, and have no ground level effect.

Taxi/idle time, whether from the runway to the gate (taxi/idle-in) or from the gate to the runway (taxi/idle-out), depends on the size and layout of the airport, the amount of traffic or congestion on the ground, and airport-specific operational procedures. Taxi/idle time is the most variable of the LTO modes. Taxi/idle time can vary significantly for each airport throughout the day, as aircraft activity changes, and seasonally, as general travel activity increases and decreases.

The takeoff period, characterized primarily by full-throttle operation, typically lasts until the aircraft reaches between 500 and 1000 feet above ground level when the engine power is reduced and the climbout mode begins. This transition height is fairly standard and does not vary much from location to location or among aircraft categories.

This methodology describes techniques and data sources for determining the critical variables in the inventory calculations. When an inventory is being created for a particular area, the fleet make-up, aircraft activity, and times-in-mode will be specific to that area. Engine emission indexes, on the other hand, depend on the engine design and are provided in reference tables.

Where specific information may be difficult to obtain, simplifying assumptions are discussed. An automated (computerized) calculation procedure, which can simplify data management, has been developed by the Federal Aviation Administration (FAA) with support from EPA and can be obtained from the FAA Technology Division, Office of Environment and Energy, 800 Independence Avenue, SW, Washington, DC 20591, (202) 267-8933. The FAA Aircraft Engine Emission Database (FAEED) includes information on the engines mounted on specific aircraft with emission factors for each of the engines, in addition to a menu-driven procedure for calculating an aircraft emissions inventory.

5.2 INVENTORY METHODOLOGY

The steps in the methodology are basically the same for each aircraft classification and each location, even though several factors used in creating an inventory are site specific.

(1) Identify all airports to be included in the inventory
(2) Determine the mixing height to be applied to the LTO cycle
(3) Define the fleet make-up for aircraft category using each airport
(4) Determine airport activity as the number of LTOs for each aircraft category
(5) Select emission indexes for each category
(6) Estimate a time-in-mode for each aircraft category at each airport
(7) Calculate an inventory based on the airport activity, TIM, and aircraft emission factors.

For a specific region where an emissions inventory is being created, steps one and two, the airports to be included and the mixing height, will be determined largely by the assumptions used in defining the scope of the modeling area. Steps three through six are repeated for commercial aircraft, general aviation, military aircraft, and helicopters. The primary difference in creating an inventory for each type of aircraft is the references used to determine the fleet make-up and activity. The following sections discuss each of these steps. Steps one and two are discussed in terms of the specific modeling area while steps three through six are addressed together for each aircraft category.

5.2.1 Airport Selection

Maps and regional information directories are good sources for identifying civil airports and military air fields. Sectional aeronautical charts, published by the Aeronautical Charts Distribution Division (C44), National Ocean Survey, NOAA, Riverdale, MD 20840, (301) 436-6990 ($5.25 per map), particularly show the location of large and small airports. Specific airports to be included will be limited by the geographic boundaries of the modeling area. A secondary reference is AOPA's Aviation USA[239] which lists publicly and privately owned civil airports, including heliports and seaplane bases, and locates them with directions relative to specific cities, as well as providing latitude and longitude coordinates. Much like the sectional aeronautical charts, this reference provides general information on all but a few small landing strips. These small air fields are unlikely to be considered for most analyses because they have low activity, typically can accommodate only small general aviation aircraft, and therefore, contribute insignificantly to the emissions inventory. (Many private

[239] AOPA's Aviation USA. Aircraft Owners and Pilots Association. 1990.

use landing sites are listed in AOPA's Aviation USA by city and site name but a telephone number is the only information given). FAA Air Traffic Activity[240] lists all airports with air traffic control towers operated by the FAA. While this is a subset of the airports listed in these other references, all of the airports in urban areas with significant air traffic are included.

5.2.2 Mixing Height Determination

The height of the mixing zone influences only the time-in-mode for approach and climbout. This factor is significant primarily when calculating NO_x emissions rather than HC or CO. If NO_x emissions are an important component of the inventory, specific data must be gathered on mixing heights. If NO_x emissions are unimportant, mixing height will have little effect on the results and the default value of 3000 feet can be used for more generalized results.

Mixing height should be determined in conjunction with those responsible for the air quality modeling of the region to insure that assumptions used for creating different sections of the overall inventory are consistent. If the inventory is being created independently of any air quality modeling, the mixing height can be determined by contacting the National Meteorological Center at (301) 763-8298 or alternatively the National Climatic Data Center (NCDC) at (704) 259-0682. Another source of mixing height data is the EPA Office of Air Quality Planning and Standards' SCRAM (Support Center for Regulatory Air Models) Bulletin Board.[241] This electronic date base contains data used by various air quality models. Mixing height data, which appears under the Meteorological Data Main Menu, comes from the NCDC. As a third alternative, typical mixing heights can be found on Figures 5-1, 5-2, and 5-3 which come from Mixing Heights, Wind Speeds, and Potential for Urban Air Pollution Throughout the Contiguous United States.[242] These figures, which show mixing height for a mean annual morning, a mean summer morning, and a mean winter morning, illustrate the seasonal variation in the mixing height. The morning data corresponds to the few hours centered near the morning commuter rush hours, which roughly coincide with the diurnal maximum concentration of slow-reacting pollutants in many urban areas. Figure 5-1, showing annual mixing heights, may be used for creating an annual inventory. If

---

[240] FAA Air Traffic Activity. U.S. Department of Transportation. Office of Management Systems. Federal Aviation Administration. Fiscal Year 1989. NTIS Report Number ADA 226063.

[241] U.S. Environmental Protection Agency. (SCRAM BBS). To access SCRAM BBS with a modem: (919) 541-5742 (XModem. 8 Bit System. NO Parity. 1 Stop Bit). Research Triangle Park. North Carolina.

[242] Mixing Heights, Wind Speeds, and Potential for Urban Air Pollution Throughout the Contiguous United States. U.S. Environmental Protection Agency. Research Triangle Park. North Carolina. January 1972. NTIS Report Number PB 207103.

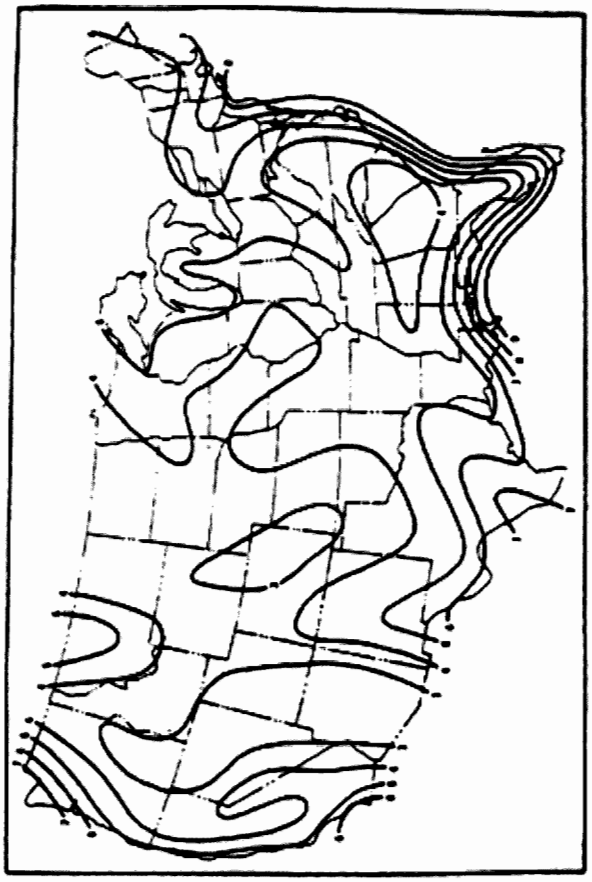

Figure 1. Isopleths ($\mu m \times 10^{-2}$) of mean annual minimum mixing heights (see Table B-1 for data).

FIGURE 3-1: REPRODUCTION OF FIGURE 1 FROM REFERENCE 5

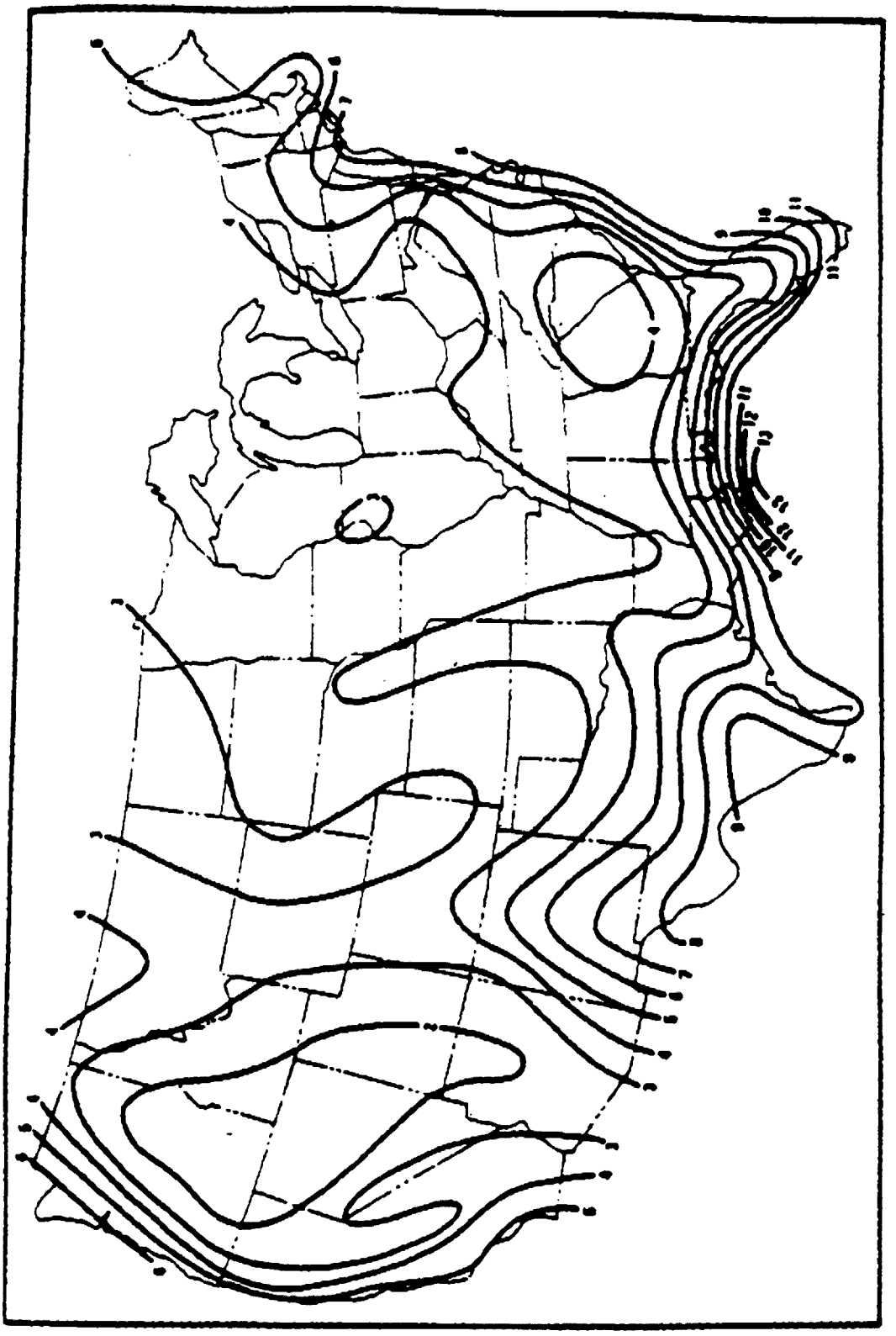

Figure 4. Isopleths (m x 10^2) of mean summer morning mixing heights (see Table B-1 for data).

FIGURE 5-2: REPRODUCTION OF FIGURE 4 FROM REFERENCE 5

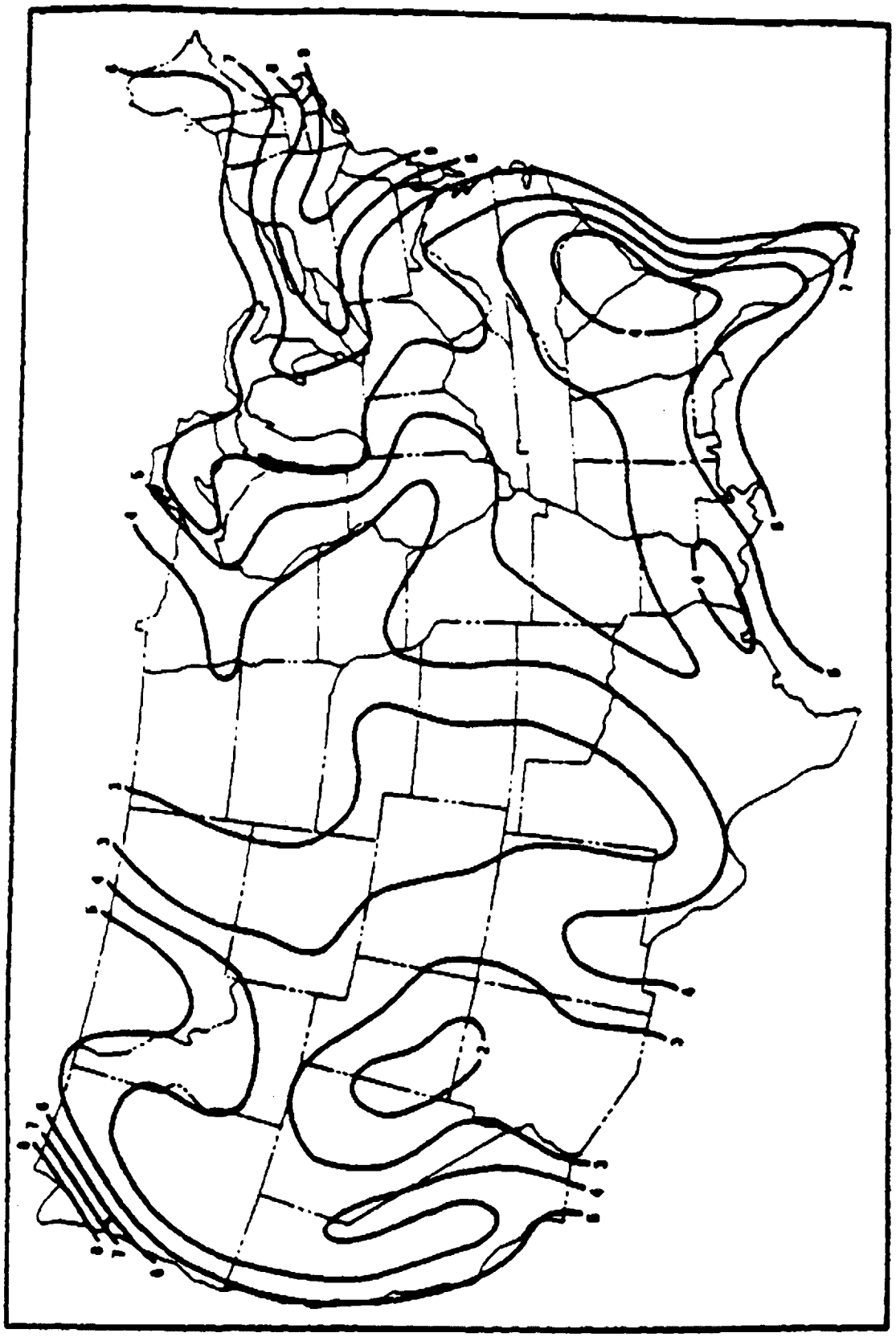

Figure 2. Isopleths (m x 10^2) of mean winter morning mixing heights (see Table B-1 for data).

FIGURE 5-3: REPRODUCTION OF FIGURE 2 FROM REFERENCE 5

a seasonal inventory is being used for evaluating emissions during a peak ozone period, the summer morning data from Figure 5-2 may be preferred. Episodes lasting two to five days occur most frequently during the winter for much of the U.S. If these episode periods are of primary interest, the data from Figure 5-3 should be used. Mixing Heights, Wind Speeds, and Potential for Urban Air Pollution Throughout the Contiguous United States should be consulted for additional information on the use of these figures. As a final alternative for mixing height, a default of 3000 feet may be used. This value, which is used as the default value for the EPA standard LTO, is incorporated into the calculations used for determining time-in-mode.

5.2.3 Activity and Emissions for Commercial Aircraft

The next four steps relate specifically to creating an emissions inventory for commercial aircraft. The procedures for other aircraft categories are discussed subsequently. Definition of the mix of commercial aircraft that uses each airport (step three) can be found in Airport Activity Statistics of Certified Route Air Carriers,[243] published annually by FAA. Figure 5-4, a copy of a page from Table 7 of that report, shows the information that is included by airport. All of the commercial aircraft that used the airport for the given year are listed, along with the number of departures during the year. This is the fleet that should be used for the inventory.

In step four the number of LTOs is determined by aircraft type. Since Airport Activity Statistics of Certificated Route Air Carriers lists departures, which are equivalent to LTOs, it is again the preferred source. From Table 7, the total departures performed for all service (both scheduled and non scheduled) should be used as the number of LTOs for each aircraft type.

The engines used on each aircraft type must be determined to select the emission factors for step five. Table 5-2 lists aircraft and the corresponding engines used to power them. Many aircraft use only a single engine model, while others have been certified to use engines from two or three different manufacturers. When a single engine is listed for an aircraft model, emissions data for that engine should be used. For aircraft with engines from more than one manufacturer, defining the specific engine mix used on the fleet of aircraft operating at a specific airport may be extremely difficult. Individual airlines probably are the only source of detailed fleet data on specific engine models and they likely do not have it readily available. To develop a representative engine mix for aircraft with more than one engine model, the percentage of each model likely to be found on those aircraft in the U.S. fleet is shown adjacent to the engine model number in Table 5-2. The recommended procedure for compensating for the lack of detailed engine data is using the percentages

---

[243] Airport Activity Statistics of Certificated Route Air Carriers. U.S. Department of Transportation. Research and Special Programs Administration. Federal Aviation Administration. Calendar Year 1989. NTIS Report Number ADA 229303.

TABLE 7—Continued
Aircraft Departures Scheduled and Aircraft Departures Performed, By Type of Operation, By Aircraft Type, By Community, and By Carrier
12 Months Ended December 31, 1980

AREA, STATE OR COUNTRY COMMUNITY (AIRPORT NAME)	CARRIER	OPERATION	TYPE OF AIRCRAFT	TOTAL DEPARTURES PERFORMED: SCHEDULED SERVICE	TOTAL DEPARTURES PERFORMED: NON SCHEDULED SERVICE	TOTAL DEPARTURES PERFORMED: ALL SERVICE	DEPARTURES SCHEDULED	SCHEDULED DEPARTURES COMPLETED: NUMBER	SCHEDULED DEPARTURES COMPLETED: % OF DEPARTURES SCHEDULED
ILLINOIS—Continued									
AIRPORT TOTAL—Continued									
			* DC-6	7		7			
			* DC-8-73	2		2			
			ALL TYPES	640		640	250	250	100.00
AIRPORT TOTAL		Domestic	B-727-100	26643	30	26673			
			B-727-200	93392	90	93482			
			DC-10-10	15840	2	15842			
			B-767-200	8994	6	8998			
			DC-9-80	45934	24	45958			
			DC-10-30	2388		2388			
			B-737-300	30001	10	30011			
			B-767-300	1645		1645			
			A-300-B4	644	2	646			
			B-757-200	3485	3	3488			
			B-737-100/200	21582	37	21619			
			BAC-111-200	5		5			
			A-320-200	331		331			
			DC-9-10	555		555			
			DC-9-30	12996	26	13022			
			B-737-200C	229	2	231			
			L-1011/100/20	772	1	773			
			DC-8-71	6725	4	6729			
			DC-8-50	2484		2484			
			* DC-10-30	325	4	329			
			* DC-10-10	166	1	167			
			* B-727-100	719		719			
			* B-727-200	242		242			
			* BEECH 18	546		546			
			* CESSNA 404	756		756			
			* B-747	637	4	641			
			* B-747F	1407	2	1409			
			* DC-8-73F	141		141			
			DC-10-40	10		10			
			B-747	809		809			
			MESTANE		1	1			
			A-310-200	9		9			
			A-310-300	145		145			
			F-28-4000/6000	195		195			
			DC-9-40	177	1	178			
			B-747SP	32		32			
			F-28-1000	56		56			
			B-737-400	30		30			
			F-27 SERIES	18375		18375			
			BAE-146-2	9329		9329			
			* L-188A/C	549		549			
			* CV-640	90		90			
			* DC-6	7		7			
			ALL TYPES	313387	250	313637	323874	312708	96.52
		International	B-727-100			349			149
			DC-10-10	128		128			
			B-727-200	217		217			
			B-767-200	682		682			
			B-767-300	1154		1154			
			DC-10-30	172		172			
			B-747	708		708			
			* B-747F		1	1			
			A-310-200	5		5			
			A-310-300	155		155			
			* DC-8-63F	1		1			
			* B-757-200	6		6			
			* DC-8-73	2		2			
			ALL TYPES	3491	1	3492	3519	3483	98.97
		Total	B-727-100	26992	30	27022			

* All Cargo Services

7-157

FIGURE 5-4: REPRODUCTION OF A PAGE OF TABLE 7 FROM REFERENCE 6

TABLE 5-2: COMMERCIAL AIRCRAFT TYPES AND ENGINE MODELS

Aircraft[1]	Engine Type[2]	No. of Engines	Engine Model (% of Aircraft) and Manufacturer[3]			
Aerospatiale ATR-42	TP	2	PW120(53)PWC	PW121(47)PWC		
Airbus A-300-B4	TF	2	CF6-50(100)GE			
Airbus A-300-600	TP	2	CF6-80C2A5(100)GE			
Airbus A-310-200	TF	2	CF6-80A3(0)GE	JT9D-7R4E1(100)PW		
Airbus A-310-300	TF	2	CF6-80C2A2(0)GE	PW4152(100)PW		
Airbus A-320-200	TF	2	CFM56-5A(100)GE			
BEECH 18[4]	TP	2	R-985-AN(100)PW[5]			
BEECH BH-C99	TP	2	PT6A-36(100)PWC			
BEECH BH-1900	TP	2	PT6A-65B(100)PWC			
Boeing B-707-300B	TF	4	JT3D-3B(100)PW			
Boeing B-707-300C	TF	4	JT3D-3B(100)PW			
Boeing B-727-100	TF	3	JT8D-7(16)PW	JT8D-7A(4)PW	JT8D-7A/7B(<1)PW	JT8D-7B(73)PW
			JT8D-7D(4)PW	JT8D-9(1)PW	JT8D-9A(2)PW	
Boeing B-727-100[6]	TF	3	JT8D-7A(6)PW	JT8D-7B(91)PW	JT8D-9(1)PW	JT8D-9A(2)PW
Boeing B-727-200	TF	3	JT8D-7A(<1)PW	JT8D-7B(16)PW	JT8D-9(20)PW	JT8D-9A(9)PW
			JT8D-15(26)PW	JT8D-15A(21)PW		
			JT8D-15B(<1)PW	JT8D-17(3)PW	JT8D-17A(1)PW	JT8D-17R(3)PW
Boeing B-737-100/200	TF	2	JT8D-7B(19)PW	JT8D-9A(39)PW	JT8D-15(10)PW	JT8D-15A(24)PW
			JT8D-17(7)PW	JT8D-17A(1)PW		
Boeing B-737-200C	TF	2	JT8D-7A(10)PW	JT8D-9/9A(5)PW	JT8D-9A(16)PW	JT8D-15(5)PW
			JT8D-17(32)PW	JT8D-17A(32)PW		
Boeing B-737-300	TF	2	CFM56-3(100)GE[8]			
Boeing B-737-400	TF	2	CFM56-3(100)GE			
Boeing B-747[9]	TF	4	JT9D-7F(100)PW			
Boeing B-747F[4]	TF	4	JT9D-7F(33)PW	JT9D-7Q(17)PW	JT9D-7R4G2(11)PW	JT9D-70A(39)PW
Boeing B-747SP	TF	4	JT9D-7A(85)PW	JT9D-7A-SP(15)PW		
Boeing B-747-200	TF	4	CF6-50(3)GE[7]	CF6-80C2B1(0)GE	JT9D-3A(7)PW	JT9D-7(1)PW
			JT9D-7A(55)PW	JT9D-7AH(13)PW	JT9D-7F(5)PW	JT9D-7Q(13)PW
			JT9D-7R4G2(3)PW			

TABLE 5-2: COMMERCIAL AIRCRAFT TYPES AND ENGINE MODELS (Continued)

Aircraft[1]	Engine Type[2]	No. of Engines	Engine Model (% of Aircraft) and Manufacturer[3]			
Boeing B-747-400	TF	4	PW4056(100)PW			
Boeing B-757-200	TF	2	RB.211-535E4(1)RR	PW2037(92)PW	PW2040(7)PW	
Boeing B-757-200[4]	TF	2	PW2040(26)PW	RB.211-535E4(74)RR		
Boeing B-767-200	TF	2	CF6-80A2(99)GE	CF6-80C2B2(12)GE[9]	JT9D-7R4D(29)PW	
Boeing B-767-300	TF	2	CF6-80C2B6(100)GE[9]	PW4060(0)PW	RB.211-524H(0)RR	
Brit. Air Corp. BAC-111-200	TF	2	Spey Mk 511(100)RR[10]			
Brit. Aero. BAe-146-1	TF	4	ALF502R-5(100)Lyc			
Brit. Aero. BAe-146-2	TF	4	ALF502R-5(100)Lyc			
Brit. Aero. Concorde	TF	4	Olympus 593 Mk610(100)RR			
Brit. Aero. JETSTREAM 31	TP	2	TPE 331-10UR(100)Ctr[10]			
CESSNA 404[4]	P	2	TSIO-520-VB(100)Cnn[10]			
Convair CV-580	TP	2	501D13E(100)AiL[10]			
Convair CV-640[4]	TP	2	Dart 542-4(100)RR			
de Havilland DASH-7	TP	4	PT6A-50(100)PWC			
de Havilland DHC-6	TP	2	PT6A-20(26)PWC	PT6A-27(74)PWC		
de Havilland DHC-8	TP	2	PW120(17)PWC	PW120A(83)PWC		
EMBRAER[11]	TP	2	PT6A-34(100)PWC			
EMBRAER EMB-120	TP	2	PW118(85)PWC	PW118A(15)PWC		
Fairchild FH-227	TP	2	Dart 532-7(100)RR			
Fokker 100	TF	2	Tay 620-15(75)RR	Tay 650(25)RR		
Fokker F-27 SERIES	TP	2	Dart 514-7(15)RR	Dart 528-7E(10)RR	Dart 532-7(5)RR	Dart 532-7N(5)RR
			Dart 532-7P(24)RR	Dart 532-7R(3)RR	Dart 535-7R(9)RR	Dart 536-7E(2)RR
			Dart 552-7R(29)RR			
Fokker F-28-1000	TF	2	Spey 555-15(100)RR			
Fokker F-28-4000/600	TF	2	Spey 555-15H(12)RR	Spey 555-15P(88)RR		
Lockheed L-100-30[4]	TP	4	501D22A(100)AiL[10]			
Lockheed L-188A/C	TP	4	501D13(100)AiL[10]			

TABLE 5-2: COMMERCIAL AIRCRAFT TYPES AND ENGINE MODELS (Continued)

Aircraft[1]	Engine Type[2]	No. of Engines	Engine Model (% of Aircraft) and Manufacturer[3]			
Lockheed L-188A/C[4]	TP	4	501D13(100)AR[10]			
Lockheed L-1011/100/200	TF	3	RB.211-22B(99)RR	RB.211-524B4(1)RR		
Lockheed L-1011-500 TR	TF	3	RB.211-524B4(100)RR			
McDonnell Douglas DC-6[4]	P	4	R2800(100)PW[10]			
McDonnell Douglas DC-6A[4]	P	4	R2800(100)PW[10]			
McDonnell Douglas DC-8-60	TF	4	JT3D-3B(57)PW	JT3D-7(43)PW		
McDonnell Douglas DC-8-61[4]	TF	4	JT3D-3B(100)PW			
McDonnell Douglas DC-8-62[4]	TF	4	JT3D-3B(15)PW	JT3D-3BDL(21)PW	JT3D-7(64)PW	
McDonnell Douglas DC-8-63F[4]	TF	4	JT3D-3B(24)PW	JT3D-7(42)PW	JT3D-735B4(7)PW	JT8D-7(27)PW
McDonnell Douglas DC-8-70	TF	4	CFM56-2-C1(100)GE			
McDonnell Douglas DC-8-71	TF	4	CFM56-2(100)GE			
McDonnell Douglas DC-9-10	TF	2	JT8D-7(100)PW[10]			
McDonnell Douglas DC-9-15F	TF	2	JT8D-7(15)PW JT8D-7B(77)PW	JT8D-7A(4)PW	JT8D-7A/7B(4)PW	
McDonnell Douglas DC-9-30	TF	2	JT8D-7(0)PW JT8D-9A(23)PW JT8D-17(1)PW	JT8D-7A(5)PW JT8D-15(3)PW	JT8D-7B(68)PW	
McDonnell Douglas DC-9-40	TF	2	JT8D-15(100)PW			
McDonnell Douglas DC-9-50	TF	2	JT8D-17(87)PW	JT8D-17A(13)PW		
McDonnell Douglas DC-9-80[12]	TF	2	JT8D-209(5)PW JT8D-217C(25)PW	JT8D-217(12)PW JT8D-219(22)PW	JT8D-217A(36)PW	
McDonnell Douglas DC-10-10	TF	3	CF6-6(100)GE			
McDonnell Douglas DC-10-10[4]	TF	3	CF6-6(100)GE			
McDonnell Douglas DC-10-30	TF	3	CF6-50(100)GE			
McDonnell Douglas DC-10-30[4]	TF	3	CF6-50(100)GE			
McDonnell Douglas DC-10-40	TF	3	JT9D-20(100)PW			
McDonnell Douglas MD-11	TF	3	CF6-80C2D1F(100)GE	PW4460(0)PW		
NAMC YS-11	TP	2	Dart 542-10K(25)RR	Dart 542-10K(75)RR		
Saab SF-340A	TP	2	CT7-5A( )GE[13]	CT7-5A2( )GE[13]	CT7-7B( )GE[13]	
SHORTS 360	TP	2	PT6A-65AR(17)PWC	PT6A-65R(55)PWC	PT6A-67R(28)PWC	
Swearingen SWEARINGEN-METRO I	TP	2	TPE 331-11U-611G( )Garrett[14]	PT6A-45R( )PW[15]		

TABLE 5-2: COMMERCIAL AIRCRAFT TYPES AND ENGINE MODELS
(Concluded)

[1] Source of Aircraft, Type, and No. of Engines is Airport Activity Statistics of Certificated Route Air Carriers, U.S. Department of Transportation, Research and Special Programs Administration, Federal Aviation Administration, Calendar Year 1989. NTIS Report Number ADA 2290303.

[2] Engine Types: TF - Turbofan, TJ - Turbojet, TP - Turboprop, P - Piston

[3] Following the engine model is the percent of aircraft in parentheses which correspond to the particular engine and the engine manufacturer.
GE engine data obtained from GE Aircraft Engines: Commercial Program Status, Volume 1, (General Electric, 1991, Cincinnati, Ohio) and Office of Combustion Technology, GE Aircraft Engines (One Neumann Way MD A309, Cincinnati, Ohio 45215-6301, 513/774-4438). Corresponding percents of aircraft refer to U.S. commercial and government aircraft in operation as of 12/31/90. P&W, P&WC, and RR engine data obtained from Turbine-Engined Fleets of the World's Airlines 1990 (Exxon Corporation, supplement to Air World, Volume 42, Number 2, 1990). Corresponding percents of aircraft refer only to U.S. airlines. Engine Manufacturers: Con - Teledyne/Continental, GE - General Electric, Grt - Garrett AiResearch, Lyc - Avco/Lycoming, PW - Pratt & Whitney, PWC - Pratt & Whitney Canada, RR - Rolls Royce

[4] All Cargo Services.

[5] Percent of aircraft assumed 100%.

[6] Refers to B-737-300 and -500 aircraft.

[7] Refers to B-747-200, -300, and SR aircraft.

[8] Refers to B-767-200ER aircraft. GE combined the number of aircraft in operation of B-767-200ER and -300ER aircraft. It is assumed that an equal distribution between the two aircraft models exists.

[9] Refers to B-767-300ER aircraft. GE combined the number of aircraft in operation of B-767-200ER and -300ER aircraft. It is assumed that an equal distribution between the two aircraft models exists.

[10] Source of engine information is Modern Commercial Aircraft, Green, W., J. Mowinski, and G. Swanborough, 1987. Percent of aircraft assumed 100%.

[11] Assumed EMB-110 aircraft.

[12] Assumed MD-80 aircraft.

[13] Source of engine information is Modern Commercial Aircraft. Percent of aircraft unknown.

[14] Source of engine information is Modern Commercial Aircraft. Engine refers to METRO III aircraft. Percent of aircraft unknown.

[15] Source of engine information is Modern Commercial Aircraft. Engine refers to METRO IIIA aircraft. Percent of aircraft unknown.

shown in the table as weighing factors. For example, Boeing 757-200 cargo aircraft have been sold to U. S. airlines with Pratt & Whitney PW2040 engines as well as Rolls Royce RB.211-535E4 engines. The number of aircraft with each engine model is 15 and 43, respectively, to give the percentages shown in Table 5-2 of 26 and 74. These percentages can be used to divide the total LTOs for B 757-200 cargo aircraft into two groups representing the two engine types. This makes the inventory more representative than assigning a single engine for all cargo versions of B 757-200s, since the emission factors are different for each engine.

After identifying the engines included in the fleet, engine emission factors are used to calculate mass of emissions. For some of the engines shown in Table 5-2, emission factors have never been determined. For these engines it is necessary to use emission factors from an alternative engine. Table 5-3 lists alternative engines recommended by the engine manufacturers. For most of these engines, emission factors are available for a very similar engine, usually one of the same model and a related series. For a small number of engines there is no emissions data available and there are no suggested alternatives. In these instances there are three approaches available. First, the needed data may appear in the latest update of the FAEED data base. The FAA should be contacted for the latest version of the data base as mentioned earlier. Second, for an aircraft with several potential engine types, where no emissions data is available for one engine, the recommended procedure is to reallocate the market share among the engines for which data is available. Third, if emission rate information (fuel consumption and emission index) for an engine model still cannot be located the engine manufacturer should be contacted directly.

After the engine types have been identified, fuel flow rates and emission indexes can be found in Table 5-4. The data in this table has been updated since the last edition of this reference and of AP-42, to include new engine models and to reflect new data on models already in AP-42. The next version of AP-42 may have some additional new data for engines that have not been updated here. (Updates primarily will be for general aviation aircraft engines.) The fuel flow rates and emission indexes that appear in Table 5-4 for commercial aircraft are based on information engine manufacturers provide to FAA and the International Civil Aviation Organization. These data are representative of production engines. Emission indexes are given for specific fuel flow rates which are representative of the power settings used during the different operating modes. The emission index multiplied by the fuel flow rate gives an emission rate.

Step 6 is to specify a time-in-mode for each aircraft type. Take-off time is fairly standard for commercial aircraft and represents the time for initial climb from ground level to about 500 feet. The default take-off time for calculating emissions is 0.7 minutes (42 seconds) and, unless more specific data is available, should be used in this methodology. The time in the approach and climbout modes depends on mixing height. As mentioned earlier, a

TABLE 5-3: ALTERNATIVE SOURCE OF EMISSION DATA FOR SOME AIRCRAFT ENGINES[1]

Manufacturer	Engine Model	Source for Emissions Data[2]
GE	CF6-6	CF6-6D
	CF6-50	CF6-50E/C1/E1/C2/E2
	CT7-5A	CT7-5
	CT7-5A2	CT7-5
	CT7-7E	CT7-5
GE (SCNECMA)	CFM56-2	CFM56-2B
	CFM56-2-C1	CFM56-2B
	CFM56-5A	CFM56-5A1
P&W	JT3D series	Contact manufacturer[3]
	JT8D-7D	JT8D-7/7A/7B
	JT8D-15B	JT8D-15
	JT9D-3A	Contact manufacturer
	JT9D-7A-SP	JT9D-7F/7A
	JT9D-7AH	JT9D-7F/7A
	JT9D-20	JT9D-7F/7A
	JT9D-70A	JT9D-70/59/7Q
	PW4060	PW4460
RR	RB211-535E5	Contact manufacturer[4]
	RB211-535F5	Contact manufacturer
	TRENT 600 series	Contact manufacturer
	TRENT 700 series	Contact manufacturer
	SPEY MK506	Contact manufacturer
	SPEY MK555-15	SPEY MK555
	SPEY MK555-15P	SPEY MK555
	SPEY MK555-15H	SPEY MK555
	SPEY MK512	Contact manufacturer
	TAY MK651	Contact manufacturer
	Dart 514-7	Dart RDa7
	Dart 528-7E	Dart RDa7
	Dart 532-7	Dart RDa7
	Dart 532-7N	Dart RDa7
	Dart 532-7P	Dart RDa7
	Dart 532-7R	Dart RDa7
	Dart 535-7R	Dart RDa7
	Dart 536-7E	Dart RDa7
	Dart 542-4	Dart RDa10
	Dart 542-10J	Dart RDa10
	Dart 542-10K	Dart RDa10
	Dart 552-7R	Dart RDa7

TABLE 5-3: ALTERNATIVE SOURCE OF EMISSION DATA
FOR SOME AIRCRAFT ENGINES[1]
(Concluded)

[1] FAA Aircraft Engine Emission Database does not identify these alternative emission factors. A manual adjustment to the database output may be required.

[2] As recommended by engine manufacturers.

[3] For information, contact the Office of Certification & Airworthiness, Commerical Engine Business, United Technologies Pratt & Whitney, 400 Main Street, East Hartford, Connecticut 06108, 203/565-2269.

[4] For information, contact Manager Project Combustion, Rolls Royce plc. P.O. Box 31, Derby DE2 88J England. Telephone - 0332 242424.

TABLE 5-4: MODAL EMISSION RATES - CIVIL AIRCRAFT ENGINES[1]

Model-Series Manufacturer[2] Rated Dry Output (1000lb thrust)	Mode	Power Setting	Fuel Flow (lb/min)	Emission Rates (lb/1000 lb) HC	CO	NO_x	SO_2[3]	Particulate
501D22A[4]	Takeoff	100%	39.60	0.28	2.04	8.88	0.54	
All.	Climbout	85%	36.63	0.89	2.06	9.22	0.54	
	Approach	30%	19.00	1.96	5.10	7.49	0.54	
	Taxi/Idle	7%	10.17	17.61	43.61	3.52	0.54	
0-200[4]	Takeoff	100%	0.75	20.81	974.10	4.87	0.11	
Con	Climbout	85%	0.75	20.81	974.10	4.87	0.11	
	Approach	40%	0.43	33.22	1187.84	1.14	0.11	
	Taxi/Idle	7%	0.14	29.00	644.42	1.58	0.11	
TSIO-360C[4]	Takeoff	100%	2.22	9.17	1081.95	2.71	0.11	
Con	Climbout	85%	1.66	9.55	960.80	4.32	0.11	
	Approach	40%	1.02	11.31	995.08	3.77	0.11	
	Taxi/Idle	7%	0.19	138.26	592.17	1.91	0.11	
CF6-6D	Takeoff	100%	229.63	0.30	0.50	40.00	0.54	
GE	Climbout	85%	189.29	0.30	0.50	32.60	0.54	
39.3	Approach	30%	64.01	0.70	6.50	11.40	0.54	
	Taxi/Idle	7%	22.86	21.00	54.20	4.50	0.54	
CF6-45	Takeoff	100%	281.22	0.10	1.00	30.60	0.54	
GE	Climbout	85%	234.13	0.10	1.30	26.60	0.54	
45.6	Approach	30%	80.03	0.70	8.20	10.50	0.54	
	Taxi/Idle	7%	26.72	32.70	59.20	3.90	0.54	
CF6-45A/A2	Takeoff	100%	268.12	0.09	0.43	25.45	0.54	
GE	Climbout	85%	219.97	0.14	0.54	21.61	0.54	
45.6	Approach	30%	78.31	0.35	5.01	9.36	0.54	
	Taxi/Idle	4%	21.56	2.72	24.04	3.40	0.54	
CF6-50E/C1/E1/C2/E2	Takeoff	100%	321.17	0.60	0.50	36.50	0.54	
GE	Climbout	85%	254.63	0.70	0.50	29.60	0.54	
51.8	Approach	30%	87.86	1.00	5.70	9.70	0.54	
	Taxi/Idle	3%	22.24	49.30	81.30	2.40	0.54	

TABLE 5-4: MODAL EMISSION RATES - CIVIL AIRCRAFT ENGINES[1] (Continued)

Model-Series Manufacturer[2] Rated Dry Output (1000lb thrust)	Mode	Power Setting	Fuel Flow (lb/min)	Emission Rates (lb/1000 lb) HC	CO	NO_x	SO_2[3]	Particulate
CF6-80A	Takeoff	100%	283.73	0.29	1.00	29.80	0.54	
GE	Climbout	85%	237.44	0.29	1.10	25.60	0.54	
46.9	Approach	30%	81.35	0.47	3.10	10.30	0.54	
	Taxi/Idle	4%	19.84	6.29	28.20	3.40	0.54	
CF6-80A1	Takeoff	100%	283.73	0.29	1.00	29.80	0.54	
GE	Climbout	85%	237.44	0.29	1.10	25.60	0.54	
46.9	Approach	30%	81.35	0.47	3.10	10.30	0.54	
	Taxi/Idle	4%	19.84	6.29	28.20	3.40	0.54	
CF6-80A2	Takeoff	100%	298.15	0.30	1.00	29.60	0.54	
GE	Climbout	85%	249.34	0.37	1.10	26.60	0.54	
48.6	Approach	30%	84.79	0.45	2.80	10.80	0.54	
	Taxi/Idle	4%	19.84	6.28	28.20	3.40	0.54	
CF6-80A3	Takeoff	100%	298.15	0.30	1.00	29.60	0.54	
GE	Climbout	85%	249.34	0.37	1.10	26.60	0.54	
48.9	Approach	30%	84.79	0.45	2.80	10.80	0.54	
	Taxi/Idle	4%	19.84	6.28	28.20	3.40	0.54	
CF6-80C2A1	Takeoff	100%	317.46	0.08	0.56	32.22	0.54	
GE	Climbout	85%	258.34	0.09	0.54	24.85	0.54	
57.9	Approach	30%	84.13	2.00	2.19	9.76	0.54	
	Taxi/Idle	7%	26.32	9.19	42.24	3.99	0.54	
CF6-80C2A2	Takeoff	100%	280.03	0.14	0.58	27.90	0.54	
GE	Climbout	85%	230.82	0.11	0.56	20.71	0.54	
52.5	Approach	30%	76.72	0.25	3.04	9.52	0.54	
	Taxi/Idle	7%	25.00	10.74	46.65	3.91	0.54	
CF6-80C2A3	Takeoff	100%	325.00	0.08	0.59	34.44	0.54	
GE	Climbout	85%	264.95	0.10	0.57	25.45	0.54	
58.9	Approach	30%	85.85	0.21	2.15	10.01	0.54	
	Taxi/Idle	7%	26.72	9.21	42.18	3.96	0.54	

TABLE 5-4: MODAL EMISSION RATES - CIVIL AIRCRAFT ENGINES[1] (Continued)

Model-Series Manufacturer[2] Rated Dry Output (1000lb thrust)	Mode	Power Setting	Fuel Flow (lb/min)	Emission Rates (lb/1000 lb) HC	CO	NO_x	SO_2[3]	Particulate
CF6-80C2A5	Takeoff	100%	341.40	0.07	0.52	34.38	0.54	
GE	Climbout	85%	275.40	0.08	0.52	22.86	0.54	
60.1	Approach	30%	90.87	0.20	1.93	9.11	0.54	
	Taxi/Idle	7%	27.38	8.99	41.65	3.79	0.54	
CF6-80C2B1	Takeoff	100%	302.25	0.08	0.58	28.11	0.54	
GE	Climbout	85%	247.75	0.09	0.55	21.26	0.54	
56.0	Approach	30%	81.48	0.21	2.37	8.83	0.54	
	Taxi/Idle	7%	25.93	9.46	43.22	3.73	0.54	
CF6-80C2B1F	Takeoff	100%	311.25	0.08	0.52	28.06	0.54	
GE	Climbout	85%	253.04	0.09	0.52	21.34	0.54	
57.2	Approach	30%	83.60	0.20	2.19	8.97	0.54	
	Taxi/Idle	7%	27.12	9.68	43.71	3.74	0.54	
CF6-80C2B2	Takeoff	100%	281.88	0.08	0.57	23.89	0.54	
GE	Climbout	85%	232.94	0.10	0.55	18.65	0.54	
52.0	Approach	30%	76.32	0.22	2.65	8.77	0.54	
	Taxi/Idle	7%	25.40	11.17	48.02	3.70	0.54	
CF6-80C2B4	Takeoff	100%	321.43	0.08	0.56	29.20	0.54	
GE	Climbout	85%	262.17	0.09	0.54	21.80	0.54	
57.2	Approach	30%	85.98	0.21	2.33	8.90	0.54	
	Taxi/Idle	7%	26.32	9.74	43.91	3.67	0.54	
CF6-80C2B6	Takeoff	100%	341.14	0.07	0.52	30.81	0.54	
GE	Climbout	85%	275.27	0.08	0.52	22.94	0.54	
60.1	Approach	30%	90.74	0.20	1.93	9.11	0.54	
	Taxi/Idle	7%	27.38	8.99	41.66	3.79	0.54	
CF6-80C2D1F	Takeoff	100%	337.83	0.08	0.52	32.54	0.54	
GE	Climbout	85%	268.39	0.10	0.53	23.55	0.54	
60.2	Approach	30%	85.36	0.21	1.98	9.28	0.54	
	Taxi/Idle	7%	26.01	9.96	44.41	3.79	0.54	
CT7-5[5]	Takeoff	100%	13.36	1.00	2.50	13.80	0.54	
GE	Climbout	90%	12.43	1.00	2.70	13.20	0.54	
	Approach	30%	5.95	1.50	5.30	6.90	0.54	
	Taxi/Idle	7%	1.98	4.00	35.40	2.20	0.54	

TABLE 5-4: MODAL EMISSION RATES - CIVIL AIRCRAFT ENGINES[1] (Continued)

Model-Series Manufacturer[2] Rated Dry Output (1000lb thrust)	Mode	Power Setting	Fuel Flow (lb/min)	Emission Rates (lb/1000 lb) HC	CO	NO_x	SO_2[3]	Particulate
CFM56-2A	Takeoff	100%	148.55	0.03	0.90	21.05	0.54	
GE (SNECMA)	Climbout	85%	122.62	0.04	1.00	17.18	0.54	
24.0	Approach	30%	45.64	0.10	3.40	8.62	0.54	
	Taxi/Idle	7%	17.46	1.17	24.90	4.12	0.54	
CFM56-2B	Takeoff	100%	132.54	0.05	0.90	19.06	0.54	
GE (SNECMA)	Climbout	85%	110.72	0.08	0.90	16.30	0.54	
22.0	Approach	30%	42.59	0.10	3.70	8.14	0.54	
	Taxi/Idle	7%	16.27	1.67	29.50	3.66	0.54	
CFM56-3	Takeoff	100%	134.92	0.04	0.90	18.50	0.54	
GE (SNECMA)	Climbout	85%	111.51	0.05	0.90	16.00	0.54	
20.1	Approach	30%	44.71	0.10	3.50	8.40	0.54	
	Taxi/Idle	7%	16.01	1.83	31.00	3.90	0.54	
CFM56-3B	Takeoff	100%	150.79	0.04	0.90	20.70	0.54	
GE (SNECMA)	Climbout	85%	123.02	0.05	0.90	17.30	0.54	
22.0	Approach	30%	47.62	0.08	3.10	8.70	0.54	
	Taxi/Idle	7%	17.20	1.25	27.00	4.10	0.54	
CFM56-3-B4	Takeoff	100%	116.40	0.04	0.90	16.60	0.54	
GE (SNECMA)	Climbout	85%	96.56	0.05	1.10	14.50	0.54	
18.5	Approach	30%	35.71	0.11	4.20	8.00	0.54	
	Taxi/Idle	7%	14.55	3.33	38.50	3.90	0.54	
CFM56-3C	Takeoff	100%	156.09	0.04	0.90	20.17	0.54	
GE (SNECMA)	Climbout	85%	128.31	0.04	1.00	17.15	0.54	
23.5	Approach	30%	44.97	0.09	3.20	8.88	0.54	
	Taxi/Idle	7%	15.87	2.14	33.40	4.00	0.54	
CFM56-5A1	Takeoff	100%	142.8	0.23	0.83	28.03	0.54	
GE (SNECMA)	Climbout	85%	116.40	0.23	0.87	23.10	0.54	
25.0	Approach	30%	39.68	0.40	2.47	9.48	0.54	
	Taxi/Idle	7%	14.55	1.53	18.00	4.36	0.54	

TABLE 5-4: MODAL EMISSION RATES - CIVIL AIRCRAFT ENGINES[1] (Continued)

Model-Series Manufacturer[2] Rated Dry Output (1000lb thrust)	Mode	Power Setting	Fuel Flow (lb/min)	Emission Rates (lb/1000 lb) HC	CO	NO_x	SO_2[3]	Particulate
TFE 731-2	Takeoff	100%	27.12	0.11	1.39	15.25	0.54	
Grt	Climbout	85%	22.88	0.13	2.03	13.08	0.54	
3.51	Approach	30%	8.86	4.26	22.38	5.90	0.54	
	Taxi/Idle	7%	3.17	20.04	58.60	2.82	0.54	
TFE 731-3	Takeoff	100%	29.76	0.06	1.13	19.15	0.54	
Grt	Climbout	85%	24.60	0.07	1.62	16.02	0.54	
3.7	Approach	30%	9.52	1.41	15.56	6.92	0.54	
	Taxi/Idle	7%	3.44	9.04	47.70	3.72	0.54	
TPE 331-3[6]	Takeoff	100%	7.63	0.11	0.76	12.36	0.54	1.75
Grt	Climbout	90%	6.82	0.15	0.98	11.86	0.54	1.47
	Approach	30%	4.17	0.64	6.96	9.92	0.54	2.40
	Taxi/Idle	7%	1.87	79.11	61.52	2.86	0.54	2.95
ALF 502L-2	Takeoff	100%	52.90	0.02	0.40	13.43	0.54	
Lyc	Climbout	85%	42.80	0.02	0.30	12.03	0.54	
7.50	Approach	30%	15.50	0.18	3.97	6.47	0.54	
	Taxi/Idle	7%	6.31	6.65	45.63	3.38	0.54	
ALF 502R-3	Takeoff	100%	45.98	0.06	0.43	11.20	0.54	
Lyc	Climbout	85%	38.10	0.05	0.50	9.94	0.54	
6.69	Approach	30%	13.58	0.29	8.43	6.15	0.54	
	Taxi/Idle	7%	5.71	6.51	44.67	3.30	0.54	
ALF 502R-5	Takeoff	100%	47.37	0.06	0.30	13.53	0.54	
Lyc	Climbout	85%	39.09	0.05	0.25	10.56	0.54	
6.96	Approach	30%	13.68	0.22	7.10	13.53	0.54	
	Taxi/Idle	7%	5.40	5.39	40.93	3.78	0.54	
0-320[4]	Takeoff	100%	1.48	11.78	1077.44	2.19	0.11	
Lyc	Climbout	85%	1.11	12.38	989.51	3.97	0.11	
	Approach	40%	0.78	19.25	1221.51	0.95	0.11	
	Taxi/Idle	7%	0.16	36.92	1077.00	0.52	0.11	

TABLE 5-4: MODAL EMISSION RATES - CIVIL AIRCRAFT ENGINES[1] (Continued)

Model-Series Manufacturer[2] Rated Dry Output (1000lb thrust)	Mode	Power Setting	Fuel Flow (lb/min)	Emission Rates (lb/1000 lb) HC	CO	NO_x	SO_2[7]	Particulates
D-36	Takeoff	100%	83.86	0.00	0.50	26.00	0.54	
MKB	Climbout	85%	70.50	0.00	0.40	22.00	0.54	
14.3	Approach	30%	27.91	0.00	2.70	9.00	0.54	
	Taxi/Idle	7%	0.00	5.40	20.70	5.50	0.54	
NK-86	Takeoff	100%	267.07	0.00	1.30	13.60	0.54	
NPO	Climbout	85%	218.26	0.00	1.70	10.00	0.54	
29.5	Approach	30%	75.66	0.00	5.00	3.80	0.54	
	Taxi/Idle	7%	32.14	4.40	27.60	2.50	0.54	
IAE V2500	Takeoff	100%	147.22	0.10	0.55	37.15	0.54	
P&W	Climbout	85%	122.22	0.11	0.55	30.82	0.54	
25.0	Approach	30%	44.18	0.15	0.77	13.45	0.54	
	Taxi/Idle	7%	16.40	0.22	7.76	5.91	0.54	
JT3D-7[4]	Takeoff	100%	165.95	0.30	.50	12.70	0.54	
P&W	Climbout	85%	136.47	0.40	1.50	9.60	0.54	
	Approach	30%	51.40	2.10	19.50	5.50	0.54	
	Taxi/Idle	7%	16.88	123.00	138.99	2.20	0.54	
JT8D-7/7A/7B	Takeoff	100%	130.85	0.40	1.50	17.10	0.54	
P&W	Climbout	85%	107.32	0.50	2.00	13.50	0.54	
13.9	Approach	30%	37.84	1.60	10.50	5.50	0.54	
	Taxi/Idle	7%	17.08	10.60	35.50	2.70	0.54	
JT8D-9/9A	Takeoff	100%	137.57	0.47	1.24	17.92	0.54	
P&W	Climbout	85%	111.91	0.47	1.66	14.21	0.54	
14.5	Approach	30%	39.42	1.72	9.43	5.64	0.54	
	Taxi/Idle	7%	17.46	10.00	34.50	2.90	0.54	
JT8D-11	Takeoff	100%	148.28	0.40	1.20	18.90	0.54	
P&W	Climbout	85%	120.85	0.45	1.80	14.60	0.54	
15.0	Approach	30%	44.17	1.40	9.40	5.80	0.54	
	Taxi/Idle	7%	19.25	10.00	35.00	2.75	0.54	
JT8D-15[7]	Takeoff	100%	155.82	0.25	0.72	19.12	0.54	
P&W	Climbout	85%	125.00	0.25	1.01	15.01	0.54	
15.5	Approach	30%	45.01	1.57	9.12	5.97	0.54	
	Taxi/Idle	7%	19.54	10.33	33.88	3.01	0.54	

TABLE 5-4: MODAL EMISSION RATES - CIVIL AIRCRAFT ENGINES[1] (Continued)

Model-Series Manufacturer[2] Rated Dry Output (1000lb thrust)	Mode	Power Setting	Fuel Flow (lb/min)	Emission Rates (lb/1000 lb) HC	CO	NO_x	SO_2[3]	Particulate
JT8D-15A	Takeoff	100%	147.49	0.25	1.08	18.10	0.54	
P&W	Climbout	85%	118.45	0.33	1.20	13.90	0.54	
15.5	Approach	30%	41.27	0.65	2.90	6.60	0.54	
	Taxi/Idle	7%	18.15	2.29	12.43	3.10	0.54	
JT8D-17[7]	Takeoff	100%	164.68	0.66	0.75	19.30	0.54	
P&W	Climbout	85%	131.88	0.75	1.01	15.26	0.54	
16.0	Approach	30%	46.83	1.86	8.13	6.23	0.54	
	Taxi/Idle	7%	19.44	9.57	29.56	3.29	0.54	
JT8D-17A	Takeoff	100%	155.16	0.25	1.07	19.10	0.54	
P&W	Climbout	85%	123.60	0.30	1.16	14.30	0.54	
16.0	Approach	30%	43.70	0.64	2.88	6.70	0.54	
	Taxi/Idle	7%	18.53	2.02	12.46	3.20	0.54	
JT8D-17AR	Takeoff	100%	180.56	0.21	0.93	24.50	0.54	
P&W	Climbout	85%	138.49	0.27	1.08	16.00	0.54	
17.4	Approach	30%	47.28	0.55	2.68	8.00	0.54	
	Taxi/Idle	7%	19.54	1.33	10.70	3.20	0.54	
JT8D-17R	Takeoff	100%	187.44	0.21	0.95	25.30	0.54	
P&W	Climbout	85%	145.90	0.27	1.03	17.60	0.54	
17.4	Approach	30%	49.67	0.53	2.54	8.40	0.54	
	Taxi/Idle	7%	20.50	0.95	9.43	3.30	0.54	
JT8D-209	Takeoff	100%	157.54	0.35	1.03	22.80	0.54	
P&W	Climbout	85%	130.00	0.50	1.40	19.00	0.54	
19.2	Approach	30%	47.51	1.69	4.37	8.80	0.54	
	Taxi/Idle	7%	17.24	4.03	14.10	3.50	0.54	
JT8D-217/217A/217C	Takeoff	100%	174.60	0.28	0.80	25.70	0.54	
P&W	Climbout	85%	142.59	0.43	1.23	20.60	0.54	
20.8	Approach	30%	50.70	1.60	4.17	9.10	0.54	
	Taxi/Idle	7%	18.15	3.33	12.27	3.70	0.54	
JT8D-219	Takeoff	100%	179.10	0.27	0.73	27.00	0.54	
P&W	Climbout	85%	143.52	0.42	1.20	20.80	0.54	
21.7	Approach	30%	50.49	1.59	4.07	9.13	0.54	
	Taxi/Idle	7%	17.78	3.48	12.63	3.60	0.54	

TABLE 5-4: MODAL EMISSION RATES - CIVIL AIRCRAFT ENGINES[1] (Continued)

Model-Series Manufacturer[2] Rated Dry Output (1000lb thrust)	Mode	Power Setting	Fuel Flow (lb/min)	Emission Rates (lb/1000 lb) HC	CO	NO_x	SO_2[3]	Particulate
JT9D-7[4] P&W	Takeoff	100%	269.83	0.05	0.20	29.40	0.54	
	Climbout	85%	219.80	0.10	0.50	31.40	0.54	
	Approach	30%	77.47	1.00	9.60	7.80	0.54	
	Taxi/Idle	7%	20.52	29.80	77.02	3.10	0.54	
JT9D-7F(mod V)/ 7A(mod V) P&W 46.7	Takeoff	100%	286.67	0.30	0.40	46.00	0.54	
	Climbout	85%	233.33	0.30	0.40	34.40	0.54	
	Approach	30%	82.50	0.50	2.90	7.80	0.54	
	Taxi/Idle	7%	20.97	26.00	54.00	3.10	0.54	
JT9D-7R4D/7R4D1 P&W 46.7	Takeoff	100%	271.83	0.13	0.51	38.30	0.54	
	Climbout	85%	221.96	0.12	0.48	32.00	0.54	
	Approach	30%	100.44	0.13	1.36	9.80	0.54	
	Taxi/Idle	7%	27.17	1.25	10.00	4.10	0.54	
JT9D-7R4E/E1(A1500) P&W 52.4	Takeoff	100%	280.16	0.16	0.57	41.80	0.54	
	Climbout	85%	228.64	0.13	0.53	34.30	0.54	
	Approach	30%	86.36	0.13	1.23	10.40	0.54	
	Taxi/Idle	7%	29.23	1.11	8.37	4.10	0.54	
JT9D-7R4E1(H) (A1-600) P&W 48.5	Takeoff	100%	293.39	0.13	0.67	36.90	0.54	
	Climbout	85%	241.03	0.13	0.67	29.70	0.54	
	Approach	30%	84.66	0.22	1.46	8.50	0.54	
	Taxi/Idle	7%	29.17	3.33	14.00	3.50	0.54	
JT9D-7R4G2 P&W 53.0	Takeoff	100%	321.30	0.13	0.74	41.30	0.54	
	Climbout	85%	265.68	0.14	0.63	32.10	0.54	
	Approach	30%	87.27	0.18	1.40	8.80	0.54	
	Taxi/Idle	7%	29.62	1.55	11.82	3.80	0.54	
JT9D-7R4H1/H2 P&W 53.0	Takeoff	100%	332.28	0.13	0.74	45.20	0.54	
	Climbout	85%	264.42	0.14	0.63	34.20	0.54	
	Approach	30%	93.60	0.18	1.39	8.90	0.54	
	Taxi/Idle	7%	32.46	1.48	11.63	3.80	0.54	

TABLE 5-4: MODAL EMISSION RATES - CIVIL AIRCRAFT ENGINES[1] (Continued)

Model-Series Manufacturer[2] Rated Dry Output (1000lb thrust)	Mode	Power Setting	Fuel Flow (lb/min)	Emission Rates (lb/1000 lb) HC	CO	NO_x	SO_2[3]	Particulate
JT9D-70/59/7Q	Takeoff	100%	323.00	0.20	0.20	31.60	0.54	
P&W	Climbout	85%	264.50	0.20	0.20	25.60	0.54	
51.1	Approach	30%	90.00	0.30	1.70	7.80	0.54	
	Taxi/Idle	7%	31.35	12.00	53.00	3.00	0.54	
PW2037	Takeoff	100%	203.44	0.05	0.40	31.10	0.54	
P&W	Climbout	85%	167.46	0.06	0.41	24.80	0.54	
37.6	Approach	30%	52.78	0.21	2.30	10.30	0.54	
	Taxi/Idle	7%	18.65	2.26	23.10	4.40	0.54	
PW2040	Takeoff	100%	241.01	0.03	0.20	47.70	0.54	
P&W	Climbout	85%	191.54	0.04	0.20	27.70	0.54	
40.8	Approach	30%	65.21	0.18	2.60	11.00	0.54	
	Taxi/Idle	7%	20.50	2.36	23.60	4.40	0.54	
PW2041	Takeoff	100%	253.57	0.03	0.20	37.00	0.54	
P&W	Climbout	85%	203.18	0.04	0.20	29.00	0.54	
42.8	Approach	30%	68.39	0.16	2.50	11.00	0.54	
	Taxi/Idle	7%	21.03	2.23	23.10	4.50	0.54	
PW4056/4156	Takeoff	100%	309.79	0.06	0.44	28.10	0.54	
P&W	Climbout	85%	255.29	0.01	0.57	22.90	0.54	
55.9	Approach	30%	87.04	0.13	2.00	11.60	0.54	
	Taxi/Idle	7%	27.51	1.92	21.86	4.80	0.54	
PW4152	Takeoff	100%	287.96	0.13	0.12	26.90	0.54	
P&W	Climbout	85%	236.11	0.16	0.17	22.70	0.54	
51.9	Approach	30%	78.44	0.15	1.09	11.10	0.54	
	Taxi/Idle	7%	23.41	0.74	12.76	4.90	0.54	
PW4158	Takeoff	100%	328.18	0.09	0.40	30.20	0.54	
P&W	Climbout	85%	265.08	0.02	0.54	23.70	0.54	
57.9	Approach	30%	90.21	0.14	1.88	11.80	0.54	
	Taxi/Idle	7%	27.91	1.78	20.99	4.80	0.54	
PW4460	Takeoff	100%	350.13	0.10	0.37	32.80	0.54	
P&W	Climbout	85%	275.80	0.03	0.51	24.70	0.54	
59.9	Approach	30%	92.99	0.14	1.78	12.00	0.54	
	Taxi/Idle	7%	28.17	1.66	20.32	4.90	0.54	

TABLE 5-4: MODAL EMISSION RATES - CIVIL AIRCRAFT ENGINES[1] (Continued)

Model-Series Manufacturer[2] Rated Dry Output (1000lb thrust)	Mode	Power Setting	Fuel Flow (lb/min)	Emission Rates (lb/1000 lb) HC	CO	NO_x	SO_2[3]	Particulate
JT15D-1	Takeoff	100%	19.58	0.01	2.65	7.60	0.54	
P&WC	Climbout	85%	16.40	0.01	3.50	6.77	0.54	
2.39	Approach	30%	6.75	4.43	40.50	3.44	0.54	
	Taxi/Idle	7%	3.04	50.50	132.00	1.75	0.54	
JT15D-4	Takeoff	100%	22.45	0.09	2.10	9.23	0.54	
P&WC	Climbout	85%	18.92	0.19	3.18	8.56	0.54	
2.72	Approach	30%	7.80	5.15	32.00	5.29	0.54	
	Taxi/Idle	7%	3.45	40.00	97.00	2.63	0.54	
PT6A-27[6]	Takeoff	100%	7.08	0.00	1.01	7.81	0.54	
P&WC	Climbout	90%	6.67	0.00	1.20	7.00	0.54	
	Approach	30%	3.58	2.19	23.02	8.37	0.54	
	Taxi/Idle	7%	1.92	50.17	64.00	2.43	0.54	
PT6A-41[4]	Takeoff	100%	8.50	1.75	5.10	7.98	0.54	
P&WC	Climbout	90%	7.88	2.03	6.49	7.57	0.54	
	Approach	30%	4.55	22.71	34.80	4.65	0.54	
	Taxi/Idle	7%	2.45	101.63	115.31	1.97	0.54	
Dart RDa7	Takeoff	100%	23.55	1.00	3.20	5.60	0.54	
RR	Climbout	85%	20.77	1.10	3.50	4.50	0.54	
	Approach	30%	10.77	3.00	33.30	0.90	0.54	
	Taxi/Idle	7%	6.84	23.90	91.40	0.70	0.54	
Dart RDa10	Takeoff	100%	28.17	0.00	2.20	4.30	0.54	
RR	Climbout	85%	22.49	0.00	3.00	3.90	0.54	
	Approach	30%	10.44	0.00	23.20	2.20	0.54	
	Taxi/Idle	7%	6.96	8.90	41.40	1.60	0.54	
M45H-01	Takeoff	100%	65.87	0.75	6.20	11.50	0.54	
RR	Climbout	85%	55.03	0.74	7.90	9.30	0.54	
7.28	Approach	30%	19.31	7.40	51.00	3.60	0.54	
	Taxi/Idle	7%	7.01	59.50	178.40	1.50	0.54	

TABLE 5-4. MODAL EMISSION RATES - CIVIL AIRCRAFT ENGINES[1] (Continued)

Model-Series Manufacturer[2] Rated Dry Output (1000lb thrust)	Mode	Power Setting	Fuel Flow (lb/min)	Emission Rates (lb/1000 lb) HC	CO	NO_x	SO_2[7]	Particulate
OLYMPUS 593 MK610	Takeoff	100%	841.84	2.90	29.80	9.50	0.54	
RR	Climbout	85%	708.07	1.70	19.90	9.30	0.54	
37.0	Descent	15%	98.61	22.00	73.20	2.50	0.54	
	Approach	30%	154.90	11.40	52.90	3.50	0.54	
	Taxi/Idle	7%	58.69	33.40	100.10	1.70	0.54	
RB.211-22B	Takeoff	100%	246.83	0.36	2.48	34.32	0.54	
RR	Climbout	85%	203.97	0.39	4.14	27.63	0.54	
41.0	Approach	30%	73.15	7.75	26.30	5.05	0.54	
	Taxi/Idle	7%	30.03	65.37	93.17	2.70	0.54	
RB.211-524B/B2/B3/B4	Takeoff	100%	315.21	0.32	1.83	47.00	0.54	
RR	Climbout	85%	256.40	0.40	2.82	33.00	0.54	
49.1	Approach	30%	91.67	4.00	20.00	9.75	0.54	
	Taxi/Idle	7%	35.98	30.60	82.30	3.53	0.54	
RB.211-524C2	Takeoff	100%	320.04	0.00	0.66	41.90	0.54	
RR	Climbout	85%	267.20	0.22	1.63	32.30	0.54	
50.3	Approach	30%	97.80	4.42	18.90	10.40	0.54	
	Taxi/Idle	7%	39.60	54.20	81.00	3.37	0.54	
RB.211-524D4[7]	Takeoff	100%	322.12	0.02	0.53	36.97	0.54	
RR	Climbout	85%	257.96	0.42	1.15	41.06	0.54	
51.9	Approach	30%	94.97	4.60	16.44	9.40	0.54	
	Taxi/Idle	7%	38.59	45.11	71.27	4.12	0.54	
RB.211-524G	Takeoff	100%	346.56	2.20	0.50	50.71	0.54	
RR	Climbout	85%	272.13	1.46	0.63	40.94	0.54	
36.0	Approach	30%	92.59	1.14	1.01	9.56	0.54	
	Taxi/Idle	7%	34.39	3.28	13.74	4.63	0.54	
RB.211-524H	Takeoff	100%	361.11	1.00	0.50	45.00	0.54	
RR	Climbout	85%	287.04	0.60	0.40	46.30	0.54	
39.5	Approach	30%	93.92	0.30	1.00	10.30	0.54	
	Taxi/Idle	7%	34.39	0.50	11.70	4.00	0.54	

TABLE 5-4: MODAL EMISSION RATES - CIVIL AIRCRAFT ENGINES[1] (Concluded)

Model-Series Manufacturer[2] Rated Dry Output (1000lb thrust)	Mode	Power Setting	Fuel Flow (lb/min)	Emission Rates (lb/1000 lb) HC	CO	NO_x	SO_2[3]	Particulate
RB.211-535C	Takeoff	100%	238.10	0.25	0.70	33.71	0.54	
RR	Climbout	85%	194.45	0.14	0.27	24.89	0.54	
36.7	Approach	30%	71.43	0.44	0.84	6.37	0.54	
	Taxi/Idle	7%	26.46	1.44	18.79	3.44	0.54	
RB.211-535E4	Takeoff	100%	246.03	0.69	1.01	52.70	0.54	
RR	Climbout	85%	199.74	0.94	1.23	36.20	0.54	
39.5	Approach	30%	75.40	1.33	1.71	7.50	0.54	
	Taxi/Idle	7%	25.13	2.85	15.44	4.30	0.54	
SPEY MK511	Takeoff	100%	117.59	0.98	1.81	23.27	0.54	
RR	Climbout	85%	96.03	1.32	2.06	19.18	0.54	
11.3	Approach	30%	36.91	7.23	20.30	7.94	0.54	
	Taxi/Idle	7%	15.74	56.73	97.96	1.48	0.54	
SPEY MK511-8	Takeoff	100%	117.86	0.09	0.12	22.70	0.54	
RR	Climbout	85%	96.03	0.12	0.63	17.30	0.54	
11.3	Approach	30%	36.77	0.18	2.65	7.20	0.54	
	Taxi/Idle	7%	16.80	3.69	31.77	3.60	0.54	
SPEY MK555[8]	Takeoff	100%	73.50	0.74	0.41	19.61	0.54	
RR	Climbout	85%	60.13	1.27	0.16	15.07	0.54	
9.89	Approach	30%	22.66	5.43	17.96	6.12	0.54	
	Taxi/Idle	7%	11.74	71.84	74.68	2.26	0.54	
TAY MK620-15/MK611-8	Takeoff	100%	100.53	0.80	0.70	21.10	0.54	
RR	Climbout	85%	83.33	0.30	0.80	16.80	0.54	
13.8	Approach	30%	30.42	0.90	3.90	5.70	0.54	
	Taxi/Idle	7%	14.55	3.40	24.10	2.50	0.54	
TAY MK650[9]	Takeoff	100%	115.61	0.40	1.70	19.80	0.54	
RR	Climbout	85%	94.58	0.40	2.00	16.50	0.54	
15.1	Approach	30%	33.60	0.90	6.50	4.60	0.54	
	Taxi/Idle	7%	15.74	3.30	33.80	1.70	0.54	

TABLE 5-4: MODAL EMISSION RATES - CIVIL AIRCRAFT ENGINES[1]
(Concluded)

[1] SOURCE: ICAO Engine Exhaust Emissions Databank (ICAO Committee on Aviation Environmental Protection, Working Group 3 Meeting, Mariehamn, Aland., October 1989), unless otherwise noted.

[2] MANUFACTURERS: All. - Allison, Con - Teledyne/Continental, GE - General Electric, Grt - Garrett AiResearch, Lyc - Avco/Lycoming, P&W - Pratt & Whitney, P&WC - Pratt & Whitney Canada, RR - Rolls-Royce

[3] SO_2 emissions based on national average sulfur content of aviation fuels from Aviation Turbine Fuels, 1989, Dickson, Cheryl L. and Paul W. Woodward, March, 1990, NIPER Report Number NIPER-164 PPS, National Institute for Petroleum and Energy Research, IIT Research Institute, Bartlesville, Oklahoma.

[4] Source of data is AP-42, Compilation of Air Pollutant Emission Factors, Volume II: Mobile Sources, U.S. Environmental Protection Agency, Ann Arbor, Michigan, September, 1985. (Aircraft data from February 1980).

[5] Source of engine data is General Electric Office of Combustion Technology, GE Aircraft Engines, One Neumann Way MD A309, Cincinnati, Ohio 45215-6301, 513/774-4438.

[6] Source of data is AP-42. Source of Particulate data is AP-42 Reference 4 (M. Platt, et al., The Potential Impact of Aircraft Emissions upon Air Quality, APTD-1085, U.S. Environmental Protection Agency, Research Triangle Park, NC, December 1971). The indicated reference does not specify series number for this model engine.

[7] Source of engine data is ICAO, ICAO Engine Exhaust Emissions Databank. Data are sales weighted averages of two versions of this engine. The basis is 93% high emission combustors and 7% low emission combustors.

[8] Source of engine data is ICAO, ICAO Engine Exhaust Emissions Databank. Data are sales weighted averages of two versions of this engine. The basis is 77% high emission combustors and 23% low emission combustors.

[9] Source of engine data is Rolls Royce Combustion Research Department, Rolls Royce plc. P.O. Box 31, Derby DE2 8BJ England. Telephone - 0332 242424.

default mixing height of 3000 feet was assumed for calculating an approach time of 4 minutes and a climbout time of 2.2 minutes, which can be used if specific information on mixing height is unavailable. The procedure for adjusting these times to correspond to a different mixing height is shown below.

The mode most likely to vary by time for each specific airport is taxi/idle time. Total taxi/idle time for a very congested airport can be as much as three or four times longer than for an uncongested airport. Taxi/idle-in time typically is shorter than taxi/idle-out time because there are usually fewer delays for aircraft coming into a gate than for aircraft lining up to takeoff. For a large congested airport the taxi/idle-out time can be three times longer than taxi/idle-in time. Taxi/idle time also may vary by aircraft type. For example, wide-body jets may all use special gates at the terminal that place them further from the runway than narrow-body jets or small regional commuter aircraft so their taxi/idle-in and taxi/idle-out times are longer. Because of the variation in taxi/idle time, it is important to get data specific to the airports of interest in the inventory. Commercial airlines must keep track of their taxi/idle time at each airport for different aircraft types so that their flight schedules reflect anticipated daily and seasonal variations. These data are important to the airlines since they report schedule delays to the Department of Transportation as a measure of their operating performance. Therefore, the airlines' Flight Operations departments at their headquarters locations are the best source of data for taxi/idle time by aircraft type at a particular airport. Since all airlines using a particular airport will experience similar taxi/idle times it is only necessary to get information from a single source. If taxi/idle times are not available for a particular airport, Table 5-1 lists default values of taxi/idle periods, as well as other modes, for different aircraft classifications. For commercial aircraft this information is based on data collected prior to 1971 at large airports during periods of congestion. Idle times that reflect more recent experience will be incorporated in the next version of AP-42. For the inventory calculations, taxi/idle-in and taxi/idle-out time are added together to get a total time for the taxi/idle mode.

The final step in the procedure is to calculate total emissions for each aircraft type and to sum them for a total commercial aircraft emission rate. The following series of equations illustrates the calculation:

Adjust Approach and Climbout TIM to Represent Local Conditions

These equations adjust the times-in-mode, which are based on a default mixing height of 3000 feet, to an airport specific value based on the local mixing height. Equation 5-2 assumes the climbout mode begins with the transition from takeoff to climbout at 500 feet and continues until the aircraft exits the mixing layer.

TIM_{app-C} = 4 X (H/3000) (5-1)

TIM_{clm-C} = 2.2 X [(H-500)/2500] (5-2)

TIM_{app-C} - time in the approach mode for commercial aircraft, in minutes

TIM_{clm-C} - time in the climbout mode for commercial aircraft, in minutes

H - mixing height used in air quality modeling for time and region of interest

Calculate Emissions for Each Aircraft Type

E_{ij} = _ (TIM_{jk}) X $(FF_{jk}/1000)$ X (EI_{ijk}) X (Ne_j) (5-3)

E_{ij} = total emissions of pollutant i, in pounds, produced by aircraft type j for one LTO cycle

TIM_{jk} = time in mode for mode k, in minutes, for aircraft type j

FF_{jk} = fuel flow for mode k, in pounds per minute, for each engine used on aircraft type j (from Table 5-4)

EI_{ijk} = emission index for pollutant i, in pounds of pollutant per one thousand pounds of fuel,in mode k for aircraft type j (from Table 5-4)

NE_j = number of engines used on aircraft type j (from Table 5-2)

Calculate Total Emissions for All Commercial Aircraft

$$E_{Ti(C)} = \Sigma (E_{ij}) X (LTO_j) \quad (5\text{-}4)$$

$E_{Ti(C)}$ - total emissions of pollutant i, in pounds, produced by all commercial aircraft operating in the region of interest (where j covers the range of commercial aircraft operating in the area)

LTO_j - total number of LTO cycles for aircraft type j, during the inventory period (annual data available from Airport Activity Statistics of Certificated Route Air Carriers, Table 7)

After completing this series of equations, the inventory of emissions is complete for commercial aircraft. The next series of calculations is a repeat of steps three through six for general aviation aircraft.

5.2.4 Activity and Emissions for General Aviation and Air Taxi Aircraft

5.2.4.1 Aircraft-Specific Procedure

The overall methodology for general aviation and air taxi aircraft is similar to that for commercial aircraft. Unfortunately, defining the fleet mix and associated activity level of general aviation and air taxi aircraft is more difficult than for commercial aircraft. FAA does not track operations by aircraft model for the general aviation category and no other sources of these data cover all states. For some states, this information is available for some airports from the State Airport Authority or from the operations officials at individual airports. Detailed model information for aircraft operating in the inventory area is difficult to locate, except perhaps for air taxis, and may add only relatively small improvement in accuracy to the emissions inventory compared to treating general aviation and air taxis as though they were made up of a representative mix of aircraft. For some smaller airports, air taxi activity may predominate and it may be possible to locate aircraft specific information on the operations there.

Where information on specific aircraft is available, it can be combined with engine-specific emission factors and the time in each operational mode to estimate total engine emissions from the general aviation and air taxi categories. Table 5-4 shows emission factors for the various engines. Table 5-5 shows some examples of the aircraft and engine combinations. Information on these categories may be expanded in the next update of AP-42 to include more aircraft and engine combinations as well as emission indices for additional engines.

TABLE 5-5: GENERAL AVIATION AIRCRAFT TYPES AND ENGINE MODELS[1]

Aircraft		No. of Seats	No. of Engines	No. of Aircraft[2]	Engine	Mnf[3]
Piston						
	Bellanca 7GCBC Seaplane	3	1	567	0-320	Lyc
	Cessna 150	2	1	13760	O-200	Con
	Cessna 337 series	6	2	1151	TSIO-360C	Con
	Piper PA-18 series	2	1	3590	0-320[4]	Lyc
Turbojet						
	Aerospatiale SN601 Corvette	16	2	1	JT15D-4	PWC
	Canadair CL-600 Challenger	13	2	61	ALF502L-2	Lyc
	Dassault Bregue Falcon 10	7	2	126	TFE731-2	Grt
	Dassault Bregue Falcon 50	10	3	125	TFE731-3	Grt
	Gates Learjet 35/36	10	2	67	TFE731-2-2B	Grt
	Gates Learjet 35A/36A	10	2	342	TFE731-2-2B	Grt
	Israel Aircraft IAI 1124	10	2	151	TFE731-3	Grt
	Learjet 31	10	2	6	TFE731-2	Grt
	Mitsubishi MU-300 series	11	2	75	JT15D-4	PWC
Turboprop						
	de Havilland DHC-6-300	22	2	40	PT6A-27	PWC
	Fairchild Pilatus PC6 series	8	1	8	PT6A-27[5]	PWC
	Helio Aircraft HST-550A Stallion	10	1	1	PT6A-27	PWC
	Piper PA-42 series	11	2	105	PT6A-41[6]	PWC

[1] Source of aircraft, corresponding engines, and number of engines is FAA Aircraft Engine Emission Database (FAEED), U.S. Department of Transportation, Federal Aviation Administration, Office of Environment and Energy, 1991. Source of number of seats, aircraft type, and number of aircraft is Census of U.S. Civil Aircraft, U.S. Department of Transportation, Federal Aviation Administration, Office of Management Systems, Calendar Year 1989.

[2] No. of Aircraft refers to Total U.S. Registered Aircraft as of December 31, 1989.

[3] ENGINE MNF ABBREVIATIONS: Con - Teledyne/Continental, GE - General Electric, Grt - Garrett AiResearch, Lyc - Avco/Lycoming, P&W - Pratt & Whitney, PWC - Pratt & Whitney Canada, RR - Rolls-Royce

[4] Engine refers to a PA-18-150 Super aircraft.

[5] Engine refers to a PC6/B2H2 aircraft.

[6] Engine refers to a PA-42 Cheyenne aircraft.

If the detailed estimation procedure is being followed based on specific aircraft and engines, airport specific estimates on time-in-mode might be used if available from airport officials. These data likely vary quite widely because of the many different types of services provided by this aircraft category. Otherwise, the estimation procedure is based on the default times-in-mode from Table 5-1. The rest of the detailed estimation procedure uses the same set of equations used for commercial aircraft. Emissions should be calculated separately for the general aviation and air taxi categories.

Adjust Approach and Climbout TIM to Represent Local Conditions

TIM_{app-Gi} = 6 X (H/3000) (5-5)

TIM_{clm-Gi} = 5 X [(H-500)/2500] (5-6)

TIM_{app-Gi} - time in the approach mode, in minutes

TIM_{clm-Gi} - time in the climbout mode, in minutes (assumes transition from takeoff to climbout occurs at 500 feet)

H - mixing height used in air quality modeling for time and region of interest

Calculate Emissions for Each Aircraft Type

The emission factors that appear in Table 5-4 for general aviation and air taxi aircraft have not been updated since the last version of AP-42. The next edition of AP-42 should include updates to much of the date that appears in the table.

E_{ij} = $\Sigma (TIM_{jk}) X (FF_{jk}/1000) X (EI_{ijk}) X (Ne_j)$ (5-7)

E_{ij} = total emissions of pollutant i, in pounds, produced by aircraft type j for one LTO cycle.

TIM_{jk} = time in mode for mode k, in minutes, for aircraft type j

FF_{jk} = fuel flow for mode k, in pounds per minute, for each engine used on aircraft type j (from Table 5-4)

EI_{ijk} = emission index for pollutant i, in pounds of pollutant per one thousand pounds of fuel, in mode k for aircraft type j (from Table 5-4)

NE_j = number of engines used on aircraft type j (from Table 5-5)

Calculate Total Emissions for All General Aviation or Air Taxi Aircraft

$$E_{Ti(G)} = \Sigma E_{ij} \quad (5\text{-}8)$$

$E_{ti(G)}$ = total emissions of pollutant i, in pounds, produced by all general aviation or air taxi aircraft operating in the region of interest (where j covers the range of aircraft operating in the area)

LTO_j = total number of LTO cycles for aircraft type j, during the inventory period

5.2.4.2 Alternative, Fleet-Average Procedure

Where detailed information on specific aircraft mix and activity is unavailable, a rough estimate of emissions for each aircraft category can be made using emission indices based on a representative fleet mix.[244] The following indices were calculated based on 1988 fleet data for general aviation aircraft.

HC	0.394 pounds per LTO
CO	12.014 pounds per LTO
NO_x	0.065 pounds per LTO
SO_2	0.010 pounds per LTO

Since air taxis have fewer of the smallest engines in their fleet and more turboprop and turbojet engines, their emission factors are somewhat different.

HC	1.234 pounds per LTO
CO	28.130 pounds per LTO
NO_x	0.158 pounds per LTO
SO_2	0.015 pounds per LTO

Airport activity for general aviation aircraft and air taxis can be found in FAA Air Traffic Activity. Figure 5-5 is a copy of a page from Table 4 which reports airport operations at airports with FAA-operated traffic control towers. Table 22 from the same report lists operations at airports with FAA contractor-operated traffic control towers. In this report, an operation could be either a takeoff or landing, so the number of operations should be divided by two to get LTOs. In addition to these airports, general aviation and air taxi activity is common at smaller airports and landing strips not included in FAA's reporting system. These airports must be contacted directly to determine if information is available on

[244] Memorandum from S. Webb to R. Wilcox. "General Aviation Generalized Emission Indexes." June 10, 1991.

TABLE 4 - FISCAL YEAR 1989

AIRPORT OPERATIONS AT AIRPORTS WITH FAA-OPERATED TRAFFIC CONTROL TOWERS BY REGION AND BY STATE AND AVIATION CATEGORY-CONTINUED

State and Location Name	Location Identifier	Hub	Total	Air Carrier	Air Taxi	General Aviation	Military
LOUISIANA—Continued							
LAKE CHARLES	(LCH)	N					
ITINERANT OPERATIONS			35367	20	14801	19836	901
LOCAL OPERATIONS			18108			17233	875
TOTAL OPERATIONS			53475	20	14801	36869	1776
MONROE	(MLU)	N					
ITINERANT OPERATIONS			49689	5861	8384	34468	1118
LOCAL OPERATIONS			28040			25576	3784
TOTAL OPERATIONS			78839	5861	8384	60044	4902
NEW ORLEANS LAKEFRONT	(NEW)	L					
ITINERANT OPERATIONS			114422	0	4421	100484	9537
LOCAL OPERATIONS			101756			88096	3660
TOTAL OPERATIONS			216178	0	4421	188580	13197
NEW ORLEANS MOISANT	(MSY)	L					
ITINERANT OPERATIONS			138869	88849	18173	29861	986
LOCAL OPERATIONS			0			0	0
TOTAL OPERATIONS			138869	88849	18173	29861	986
SHREVEPORT	(SHV)	S					
ITINERANT OPERATIONS			51117	18229	10836	20987	1067
LOCAL OPERATIONS			14325			7166	7159
TOTAL OPERATIONS			65442	18229	10836	28153	8246
SHREVEPORT DOWNTOWN	(DTN)	S					
ITINERANT OPERATIONS			24399	0	299	24030	63
LOCAL OPERATIONS			30726			30664	62
TOTAL OPERATIONS			55125	0	299	54694	145
STATE TOTAL LOUISIANA							
ITINERANT OPERATIONS			678143	136334	153271	388290	23248
LOCAL OPERATIONS			276570			253338	23232
TOTAL OPERATIONS			954713	136334	153271	619628	46480
MAINE							
BANGOR INTERNATIONAL	(BGR)	S					
ITINERANT OPERATIONS			69819	10589	20629	24631	13874
LOCAL OPERATIONS			55446			29599	26350
TOTAL OPERATIONS			125265	10589	20629	54230	40224
PORTLAND	(PWM)	S					
ITINERANT OPERATIONS			88156	18049	25324	43751	1032
LOCAL OPERATIONS			25933			24863	1070
TOTAL OPERATIONS			114089	18049	25324	68614	2102
STATE TOTAL MAINE							
ITINERANT OPERATIONS			157775	28637	45953	68382	14906
LOCAL OPERATIONS			81382			54462	27420
TOTAL OPERATIONS			239157	28637	45953	122844	42326
MARYLAND							
BALTIMORE WASHINGTON INTL	(BWI)	M					
ITINERANT OPERATIONS			305537	156782	84661	60585	1219
LOCAL OPERATIONS			1180			1010	170
TOTAL OPERATIONS			306717	156782	84661	61575	1389
CAMP SPRINGS ANDREWS AFB	(ADW)	L					
ITINERANT OPERATIONS			102568	100	16	15786	86667
LOCAL OPERATIONS			34157			6220	27937
TOTAL OPERATIONS			136725	100	16	21986	114624
HAGERSTOWN	(HGR)	L					
ITINERANT OPERATIONS			48832	28	7323	38275	3306
LOCAL OPERATIONS			36829			33643	2986
TOTAL OPERATIONS			85661	28	7323	71918	6292
STATE TOTAL MARYLAND							
ITINERANT OPERATIONS			457037	158920	92300	114806	91212
LOCAL OPERATIONS			71966			40873	31093
TOTAL OPERATIONS			529003	158920	92300	155478	122305
MASSACHUSETTS							
BEDFORD	(BED)	L					
ITINERANT OPERATIONS			167857	0	20301	145032	2524
LOCAL OPERATIONS			70653			70579	74
TOTAL OPERATIONS			238510	0	20301	215611	2598
BEVERLY MUNICIPAL	(BVY)	L					
ITINERANT OPERATIONS			57903	0	87	57853	163
LOCAL OPERATIONS			81809			81801	8
TOTAL OPERATIONS			139712	0	87	139454	171
BOSTON LOGAN	(BOS)	L					
ITINERANT OPERATIONS			417111	239281	131519	45892	319
LOCAL OPERATIONS			0			0	0
TOTAL OPERATIONS			417111	239281	131519	45892	319

24

FIGURE 5-5: REPRODUCTION OF A PAGE OF TABLE 4 FROM REFERENCE 3

general aviation activity. Air taxi operators located at the airports, may be a source for information on air taxi activity. These steps may have little impact on the inventory and should be considered discretionary.

The annual emissions are then calculated as the product of airport activity in LTOs from FAA Air Traffic Activity and the emission index in pounds per LTO listed above. Total emissions should be computed separately for general aviation and air taxis.

5.2.5 Activity and Emissions for Military Aircraft

FAA Air Traffic Activity contains information on the number of military operations at airports with FAA-operated traffic control towers. This information can be used in much the same way as for general aviation aircraft, however, military air bases are not included in this reference. The information only addresses military operations at civil airports. Military air bases included in the modeling area should be apparent from maps of the area. For these bases, it likely will be difficult to get good information on fleet make up and activity. In some cases, information may be available from the Office of the Base Commander on fleet make-up and possibly some measure or estimate of activity such as LTOs for one day or one month. Where specific information is available for aircraft type and LTOs, Table 5-6 lists military aircraft and their engines, and Table 5-7 lists the modal emission rates for these engines. Much of the data in Table 5-7 has been updated since the last version of AP-42.

Where data on military aircraft operations and fleet make-up cannot be obtained from the base commander, a centralized support office may be able to provide the required information. The Navy[245] and Air Force[246] both have environmental support offices responsible for information on emissions from military aircraft including complete inventories for many bases. If inventory information is unavailable after contacting the Navy or Air Force environmental support office, a letter requesting an inventory should be sent to the base commander through the EPA regional office with copies to the appropriate environmental support office.

If data on fleet make up and activity are obtained from the base commander or the environmental support offices, the procedure for calculating an inventory for military aircraft is the same as that used for both commercial and general aviation. The calculations for each subsequent step follow.

---

[245] Aircraft Environmental Support Office (AESO). Commanding Officer. Attn: AESO. Code 04210. Naval Aviation Depot. North Island. San Diego. California 92135-5112. (619) 545-2901.

[246] Air Force Engineering and Service Center. RDUS. Tyndall AFB. Florida 32403.

TABLE 5-6: MILITARY AIRCRAFT TYPES AND ENGINE MODELS[1]

Aircraft	Type[2]	Operator[3]	No. of Engines	Engine Model	Mnf[4]
Combat					
Boeing B52-H Stratofortress	TF	USAF	8	TF33-P-3	PW
Boeing EC-135C	TF	USAF	4	TF33-P-5	PW
Douglas A-4 Skyhawk[5]	TJ	USN	1	J52-P-8B	PW
Douglas A-4M Skyhawk[6]	TJ	USMC	2	J52-P-408	PW
General Dynamics F-16 Fighting Falcon[5]	TF	USAF	1	F101DFE	PW
	TF	USAF/USN	1	F100-PW-200[7]	PW
Grumman A-6 Intruder[5]	TJ	USN	2	J52-P-8B	PW
Grumman E-2 Hawkeye[5]	TP	USN	2	T56-A-16	All.
Grumman EA-6B Prowler[6]	TJ	USMC/USN	2	J52-P-408	PW
Grumman F-14 Tomcat[5]	TF	USN	2	TF30-P-412A	PW
Learjet Corp C-21-A	TF	USAF	2	TFE 731-2-2B	Grt
Lockheed S-3 Viking[5]	TF	USN	2	TF34-GE-400	GE
LTV Aircraft A-7E Corsair II	TF	USN	1	TF41-A-2	All.
McDonnell Douglas AV-8[5]	TP	USMC	1	F402	RR
McDonnell Douglas F-4 Phantom II[5]	TJ	USAF/USN	2	J79-GE-10B	GE
McDonnell Douglas F-4B Phantom II[6]	TJ	USMC/USN	2	J79-GE-8D	GE
McDonnell Douglas F-4N Phantom II[6]	TJ	USN	2	J79-GE-8D	GE
McDonnell Douglas F-4S Phantom II	TJ	USN	2	J79-GE-10	GE
McDonnell Douglas F-15C/D Eagle	TF	USAF	2	F100-PW-100	PW
McDonnell Douglas F/A-18 Hornet[5]	TF	USN	2	F404-GE-400	GE
McDonnell Douglas RF-4B Phantom II[6]	TJ	USMC	2	J79-GE-8D	GE
Northrop F-5E Tiger II	TJ	USAF/USN	2	J85-GE-21	GE
Northrop F-5F Tiger II	TJ	USAF/USN	2	J85-GE-21	GE
Northrop RF-5E Tigereye	TJ	USAF	2	J85-GE-21	GE
Rockwell OV-10 Bronco[5]	TP	USAF/USMC	2	T76-G-12A	Grt
Vought A-7 Corsair II[5]	TF	USAF/USN	1	TF41-A-2	All.
Trainer					
Boeing T-43A	TF	USAF	2	JT8D-9	PW
CASA C-101 Aviojet	TF		1	TFE 731-2	Grt
FMA Cordoba PAMPA IA.63	TF		1	TFE 731-2	Grt
Grumman Gulfstream	TF	USN	2	Dart RDa7	RR
McDonnell Douglas D F-15	TF	USAF	1	F100-PW-100	PW
McDonnell Douglas F-15 C/D Eagle	TF	USAF	2	F100-PW-100 /200[7]	PW
McDonnell Douglas F/A-18 Hornet[5]	TF	USN	2	F404-GE-400	GE
Mitsubishi T-2[5]	TJ	USN	2	J85-GE-2	GE

TABLE 5-6: MILITARY AIRCRAFT TYPES AND ENGINE MODELS[1]
(Continued)

Aircraft	Type[2]	Operator[3]	No. of Engines	Engine Model	Mnf[4]
Transport					
Australia Govt Nomad 22B	TP		2	250B17B	All.
Australia Govt Nomad 24	TP		2	250B17B	All.
BEECH C-12A/B/C	TP	Army/USAF	2	PT6A-41	PWC
Boeing B-747-200	TF		4	JT9D-7R4G2	PW
Boeing C-135B Stratolifter	TF	USAF	4	TF33-P-5	PW
Boeing E-4A/B NEACP	TF	USAF	4	CF6-50E	GE
Boeing VC-25A	TF	USAF	4	CF6-80C2B1	GE
de Havilland UV-18A	TP	Army	2	PT6A-27	PWC
Fairchild C-26A	TP	NG	2	TPE 331	Grt
Grumman C-1A Trader[5]	P	USN	2	R-1820	W
Grumman Gulfstream	TF	USAF	2	Dart RDa7	RR
LASC Georgia C-141B Starlifter	TF	USAF	4	TF33-P-7	PW
Lockheed C-130E Hercules	TP		4	T56-A-7	All.
Lockheed C-130 Hercules[5]	TP		4	T56-A-16	All.
Lockheed C-141 Starlifter	TF	USAF	4	TF33-P-7	PW
Lockheed L-100 Hercules	TP		4	501D22A	All.
McDonnell Douglas C-9A Nightingale	TF	USAF	2	JT8D-9	PW
McDonnell Douglas C-9B	TF	USN	2	JT8D-9	PW
McDonnell Douglas KC-10A Extender	TF	USAF	3	CF6-50C2	GE
McDonnell Douglas VC-9C	TF	USAF	2	JT8D-9	PW
Utility					
BEECH RU-231J	TP	Army	2	PT6A-41	PWC
BEECH UC-12F/M	TP	USMC/USN	2	PT6A-41	PWC
Helicopter					
Bell UH-1, AH-1[5]	TS	Army	1	T53-L-11D	Lyc
Boeing Vertol H-46 Sea Knight[5]	TS	USMC/USN	2	T58-GE-8F	GE
Boeing Vertol H-46E Sea Knight[6]	TS	USMC/USN	2	T58-GE-16	GE
Costruzioni HH-3F	TS	USCG	2	T58-GE-5	GE
Kaman H-2 Seasprite[5]	TS	USN	2	T58-GE-8F	GE
Sikorsky H-3 Sea King series[5]	TS		2	T58-GE-8F	GE
Sikorsky H-53 Sea Stallion/ Super Stallion[5]	TS		3	T64-GE-415	GE
Sikorsky HH-3E Jolly Green Giant	TS	USAF	2	T58-GE-5	GE
Sikorsky SH-3E	TS		2	T58-GE-5	GE
Sikorsky SH-3F	TS		2	T58-GE-5	GE
Sikorsky SH-61AA	TS		2	T58-GE-5	GE

TABLE 5-6: MILITARY AIRCRAFT TYPES AND ENGINE MODELS[1]
(Concluded)

[1] SOURCE: FAA Aircraft Engine Emission Database (FAEED), (U.S. Department of Transportation, Federal Aviation Administration, Office of Environment and Energy, 1991) unless otherwise noted.

[2] Source of Type information is "Aviation Week & Space Technology," McGraw-Hill Publication, March 18, 1991.
TYPES: P - Piston, TF - Turbofan, TJ - Turbojet, TP - Turboprop, TS - Turboshaft

[3] Source of Operator information is Encyclopedia of Modern Military Aircraft, Taylor, Michael, 1987.
OPERATORS: Army, NG - National Guard, USAF - U.S. Air Force, USCG - U.S. Coast Guard, USMC - U.S. Marine Corps, USN - U.S. Navy, US - USAF, USCG, USMC, & USN.

[4] ENGINE MANUFACTURERS: All. - Allison, GE - General Electric, Grt - Garrett AiResearch, Lyc - Avco/Lycoming, PW - Pratt & Whitney, W - Curtis Wright

[5] Source of aircraft and corresponding engine information is Example of an Air Base Emissions Inventory for the County of San Diego (1987), Aircraft Environmental Support Office, AESO Report No. 2-91, San Diego, California, March 1991.

[6] Sources: Engines - Summary Table of Gaseous and Particulate Emissions from Aircraft Engines, Aircraft Environmental Support Office, AESO Report No. 6-90, San Diego, California, June 1990.
Aircraft, Type, and No. of Engines - "Aviation Week & Space Technology," McGraw-Hill Publication, March 18, 1991.
Classification and Operator - Encyclopedia of Modern Military Aircraft, Taylor, Michael, 1987.

[7] Source: "Aviation Week & Space Technology," McGraw-Hill Publication, March 18, 1991.

TABLE 3-7: MODAL EMISSION RATES - MILITARY AIRCRAFT ENGINES[1]

Model-Series Manufacturer[2] Rated Dry Output (1000lb thrust)	Mode	Power Setting	Fuel Flow (lb/min)	Emission Rates (lb/1000 lb) HC	CO	NO_x	SO_2[3]	Particulate
25SB17B[4] All.	Takeoff	Military	4.42	0.26	7.81	6.60	0.54	
	Climbout	95%	4.08	0.37	9.02	5.96	0.54	
	Approach	30%	1.42	3.18	48.59	2.24	0.54	
	Idle	Idle	1.05	20.16	97.30	1.43	0.54	
501D22A[4] All.	Takeoff	Military	30.60	0.20	2.04	9.88	0.54	
	Climbout	95%	26.63	0.89	2.06	9.22	0.54	
	Approach	30%	19.00	1.96	5.10	7.49	0.54	
	Idle	Idle	10.17	17.61	43.61	3.52	0.54	
T56-A-7[4] All.	Takeoff	Military	34.65	0.30	2.12	9.28	0.54	1.76[5]
	Climbout	95%	31.80	0.47	2.41	9.22	0.54	1.57[5]
	Approach	30%	17.55	0.47	3.51	7.41	0.54	2.85[5]
	Idle	Idle	9.13	20.99	31.93	3.83	0.54	2.92[5]
T56-A-15[6] All.	Takeoff	100%	39.87	0.18	1.60	11.71	0.54	
	Climbout	90%	36.45	0.18	1.60	10.18	0.54	
	Approach	30%	19.30	0.28	3.00	6.38	0.54	
	Idle	7%	8.23	14.96	17.69	2.50	0.54	
T56-A-16 All.	Takeoff	Military	36.96	0.16	0.65	10.45	0.54	
	Climbout	Military	36.96	0.16	0.65	10.45	0.54	
	Approach	75%	33.27	0.17	0.42	9.93	0.54	
	Idle	LB Gr.Idle	9.98	27.32	30.11	3.53	0.54	
T63-A-5A[7] All.	Takeoff	Military	3.38	0.88	7.54	5.07	0.54	
	Climbout	75%	2.92	0.24	14.31	4.61	0.54	
	Approach	30%	1.75	3.27	38.59	2.90	0.54	
	Idle	Gr.Idle	1.02	20.30	79.15	1.42	0.54	
TF41-A-2[7] All.	Takeoff	Intermediate	149.00	0.64	1.64	22.46	0.54	
	Climbout	Intermediate	149.00	0.64	1.64	22.46	0.54	
	Approach	75% M/C	100.00	0.75	2.17	16.85	0.54	
	Idle	Idle	18.17	51.26	94.80	1.71	0.54	

TABLE 5-7: MODAL EMISSION RATES - MILITARY AIRCRAFT ENGINES[1] (Continued)

Model-Series Manufacturer[2] Rated Dry Output (1000lb thrust)	Mode	Power Setting	Fuel Flow (lb/min)	Emission Rates (lb/1000 lb) HC	CO	NO_x	SO_2[3]	Particulate
0-200[4]	Takeoff	100%	0.75	20.81	974.10	4.87	0.11	
Con	Climbout	75%	0.75	20.81	974.10	4.87	0.11	
	Approach	30%	0.43	33.22	1187.84	1.14	0.11	
	Idle	7%	0.14	29.00	644.42	1.58	0.11	
T400-CP-400[7]	Takeoff	Military	6.87	0.11	0.75	6.68	0.54	
CP	Climbout	Cruise	4.72	0.15	2.64	4.90	0.54	
	Approach	Fl.idle	2.38	7.46	30.71	3.08	0.54	
	Idle	Gr.idle	2.30	8.98	29.78	3.05	0.54	
CF6-50E/C1/ E1/C2/E2[8]	Takeoff	100%	321.17	0.60	0.50	36.50	0.54	
GE	Climbout	85%	254.63	0.70	0.50	29.60	0.54	
51.79	Approach	30%	87.86	1.00	5.70	9.70	0.54	
	Idle	3%	22.24	49.30	81.30	2.40	0.54	
F404-GE-400[7]	Takeoff	A/B max	473.28	0.13	23.12	9.22	0.54	
GE	Climbout	IRP	134.71	0.31	1.05	25.16	0.54	2.81
	Approach	76%	109.02	0.35	1.09	14.80	0.54	6.10
	Idle	Gr.idle	10.40	58.18	137.34	1.16	0.54	12.38
J79-GE-8D[7]	Takeoff	Afterburner	571.92	0.91	13.25	4.72	0.54	10.67
GE	Climbout	Military	157.55	0.14	2.07	10.44	0.54	
	Approach	75% rpm	25.33	4.40	30.61	2.98	0.54	15.34
	Idle	Idle	20.08	16.93	55.70	2.37	0.54	19.12
J79-GE-10[4]	Takeoff	Afterburner	589.83	0.49	17.29	6.82	0.54	8.47[5]
GE	Climbout	Military	163.83	1.63	5.29	15.44	0.54	7.90[5]
	Approach	85%	103.17	0.66	7.37	11.29	0.54	10.82[5]
	Idle	Idle	18.33	8.91	43.64	2.91	0.54	52.55[9]
J79-GE-10B[7]	Takeoff	Afterburner	583.33	0.52	14.56	4.51	0.54	4.43
GE	Climbout	75% Thrust	126.30	1.60	2.74	8.26	0.54	
	Approach	30% Thrust	57.03	2.94	20.04	4.23	0.54	9.50
	Idle	Idle	20.83	39.19	111.41	1.33	0.54	15.73

TABLE 3-7: MODAL EMISSION RATES - MILITARY AIRCRAFT ENGINES[1] (Continued)

Model-Series Manufacturer[2] Rated Dry Output (1000lb thrust)	Mode	Power Setting	Fuel Flow (lb/min)	Emission Rates (lb/1000 lb) HC	CO	NO_x	SO_2[7]	Particulate
J85-GE-2[7] GE	Takeoff	Military	48.17	0.45	21.56	6.40	0.54	
	Climbout	75%	35.92	0.64	28.38	5.67	0.54	
	Approach	30%	17.42	2.40	65.53	4.02	0.54	
	Idle	Ground Idle	9.33	11.86	111.86	3.48	0.54	
J85-GE-21[4] GE	Takeoff	Afterburner	177.50	0.10	26.40	5.60	0.54	
	Climbout	Military	53.33	0.25	21.56	5.00	0.54	
	Approach	85%	20.00	2.58	46.25	2.92	0.54	
	Idle	Idle	6.67	24.55	150.00	1.25	0.54	
T56-GE-5[4] GE	Climbout	70%	14.77	0.79	5.64	7.22	0.54	0.80[5]
	Approach	30%	14.77	0.79	5.64	7.22	0.54	0.80[5]
	Idle	Idle	2.22	96.99	160.17	1.50	0.54	0.75[5]
T58-GE-8F[7] GE	Takeoff	Takeoff	13.10	0.40	9.03	5.47	0.54	
	Climbout	Approach	9.68	1.12	17.28	4.47	0.54	
	Approach	Cruise	10.45	0.80	14.13	4.68	0.54	
	Idle	Idle	2.30	130.42	178.44	1.43	0.54	
T58-GE-16[7] GE	Takeoff	Military	17.00	1.32	7.73	11.60	0.54	
	Climbout	5% Normal	12.98	0.63	10.89	9.47	0.54	
	Approach	60% Normal	10.93	0.38	14.56	7.08	0.54	
	Idle	Ground Idle	2.50	40.91	139.73	3.03	0.54	
T64-GE-6B[7] GE	Takeoff	Max.cont.	23.80	0.35	1.50	10.11	0.54	
	Climbout	Military	22.83	0.51	1.87	9.80	0.54	
	Approach	75% hp	17.72	0.41	4.27	7.90	0.54	
	Idle	Idle	5.35	13.24	57.27	2.75	0.54	
T64-GE-413[7] GE	Takeoff	Maximum	28.40	0.27	0.49	11.43	0.54	
	Climbout	Intermediate	27.68	0.34	0.67	10.92	0.54	
	Approach	75% hp	21.45	0.35	1.94	8.54	0.54	
	Idle	Idle	4.33	17.28	51.83	2.62	0.54	

TABLE 5-7: MODAL EMISSION RATES - MILITARY AIRCRAFT ENGINES[1] (Continued)

Model Series Manufacturer[2] Rated Dry Output (1000lb thrust)	Mode	Power Setting	Fuel Flow (lb/min)	Emission Rate (lb/1000 lb) HC	CO	NO_x	SO_2[9]	Particulate
T64-GE-415[7] GE	Takeoff	Maximum	33.42	0.19	1.47	10.83	0.54	
	Climbout	Military	31.93	0.28	1.25	9.99	0.54	
	Approach	75%	26.83	0.13	2.10	8.09	0.54	
	Idle	Idle	4.48	24.35	74.33	2.12	0.54	
TF34-GE-400[7] GE	Takeoff	Military	63.33	0.39	5.05	7.51	0.54	2.11[10]
	Climbout	75% rpm	7.67	2.63	23.57	3.42	0.54	4.85[10]
	Idle	Idle	8.08	14.99	93.96	1.69	0.54	3.26[10]
T76-G-12A[7] Ctr	Climbout	Military	6.37	0.05	1.69	7.18	0.54	
	Approach	High idle	3.53	6.13	24.91	4.50	0.54	
	Idle	Constant	2.08	10.21	38.39	4.30	0.54	
TFE 731-2[8] Ctr 3.51	Takeoff	100%	27.12	0.11	1.39	15.25	0.54	
	Climbout	85%	22.88	0.13	2.03	13.08	0.54	
	Approach	30%	8.08	4.26	22.38	5.99	0.54	
	Idle	7%	3.17	20.04	38.60	2.82	0.54	
T53-L-11D[7] Lyc	Takeoff	Takeoff	11.50	0.27	3.85	7.75	0.54	
	Climbout	Military	11.42	0.26	3.34	6.34	0.54	
	Approach	Maximum	10.75	0.57	6.83	6.43	0.54	
	Idle	Flt.Idle	3.70	13.57	37.79	2.53	0.54	
	Idle	Gr.Idle	2.42	30.09	51.54	1.58	0.54	
F100-PW-100[4] P&W	Takeoff	Military	734.67	0.10	33.10	16.30	0.54	0.00[11]
	Climbout	95%	173.33	0.05	1.80	44.00	0.54	0.83[11]
	Approach	30%	50.00	0.60	3.00	11.00	0.54	0.33[11]
	Idle	Idle	17.67	2.26	19.34	3.96	0.54	0.09[11]
F101DFE P&W	Takeoff	Military	167.08	0.10	0.90	19.09	0.54	
	Climbout	Military	167.00	0.10	0.90	19.09	0.54	
	Approach	75% Thrust	109.77	0.20	0.90	12.04	0.54	
	Idle	Idle	14.43	4.10	44.30	2.30	0.54	

TABLE 3-7: MODAL EMISSION RATES - MILITARY AIRCRAFT ENGINES[1] (Continued)

Model-Series Manufacturer[2] Rated Dry Output (1000lb thrust)	Mode	Power Setting	Fuel Flow (lb/min)	Emission Rates (lb/1000 lb) HC	CO	NO_x	SO_2[7]	Particulate
J52-P-6B[7] P&W	Takeoff	Military	105.47	0.33	3.01	9.00	0.54	7.75
	Climbout	75% Thrust	68.28	0.65	8.00	5.84	0.54	13.13
	Approach	3000lbs Thrust	31.35	0.83	16.57	2.91	0.54	
	Idle	Idle	11.90	23.88	86.37	2.07	0.54	19.94
J52-P-6B[7] P&W	Takeoff	Military	122.53	0.93	0.71	13.05	0.54	
	Climbout	75% Thrust	72.00	0.58	3.00	10.10	0.54	
	Approach	3000lbs Thrust	31.33	1.72	10.54	6.34	0.54	
	Idle	Idle	11.33	42.20	63.78	1.79	0.54	
J52-P-408[7] P&W	Takeoff	Military	157.98	0.57	1.47	12.32	0.54	
	Climbout	Intermed 2	93.07	0.67	3.18	8.38	0.54	
	Approach	Intermed 1	42.45	1.40	11.12	6.17	0.54	
	Idle	Idle	12.98	28.33	55.06	2.38	0.54	
J57-P-10[7] P&W	Takeoff	Military	139.30	0.86	1.16	10.37	0.54	
	Climbout	Nor rated	120.63	1.00	1.79	9.00	0.54	
	Approach	75% Thrust	94.30	0.76	3.21	7.40	0.54	
	Idle	Idle	18.33	90.60	80.32	1.87	0.54	
J57-P-420[7] P&W	Takeoff	Afterburner	463.02	2.54	14.20	3.16	0.54	
	Climbout	75% Thrust	96.12	1.69	4.32	6.99	0.54	
	Approach	30% Thrust	30.00	4.54	14.63	4.45	0.54	
	Idle	Idle	22.00	70.46	88.74	1.53	0.54	
JT8D-9/9A[8] P&W 14.50	Takeoff	100%	137.57	0.47	1.24	17.92	0.54	
	Climbout	85%	111.91	0.47	1.66	14.21	0.54	
	Approach	30%	39.42	1.73	9.43	5.64	0.54	
	Idle	7%	17.46	10.00	36.50	2.90	0.54	
JT8D-7B/9/12[8] P&W 33.04	Takeoff	100%	321.30	0.13	0.74	41.30	0.54	
	Climbout	85%	261.68	0.14	0.63	32.10	0.54	
	Approach	30%	87.17	0.18	1.40	8.80	0.54	
	Idle	7%	39.42	1.35	11.83	3.80	0.54	

TABLE 3-7: MODAL EMISSION RATES - MILITARY AIRCRAFT ENGINES[1] (Continued)

Model-Series Manufacturer[2] Rated Dry Output (1000lb thrust)	Mode	Power Setting	Fuel Flow (lb/min)	Emission Rate (lb/1000 lb) HC	CO	NO_x	SO_2[7]	Particulate
TF30-P-6C[7] P&W	Takeoff	Military	111.67	0.01	1.56	11.20	0.54	
	Climbout	75% Thrust	99.33	0.34	4.75	7.38	0.54	
	Approach	30% Thrust	33.83	1.84	14.87	4.77	0.54	
	Idle	Idle	11.17	12.93	70.58	2.03	0.54	
TF30-P-412A P&W	Takeoff	Afterburner	796.67	0.20	10.79	4.79	0.54	
	Climbout	Military	117.50	0.77	1.38	19.60	0.54	2.06[12]
	Approach	75% Thrust	71.67	1.48	3.43	10.74	0.54	7.99[12]
	Idle	Idle	13.33	36.43	33.60	3.22	0.54	6.96[12]
TF33-P-3/3/7[4] P&W	Takeoff	Afterburner	104.32	0.30	1.30	11.00	0.54	8.00[5]
	Climbout	Military	122.05	0.40	1.80	9.00	0.54	14.00[5]
	Approach	65%	63.28	3.79	9.01	7.30	0.54	13.00[5]
	Idle	Idle	14.10	91.96	68.53	1.77	0.54	5.20[5]
Dart RDa7[4] RR	Takeoff	Military	23.40	6.21	3.40	6.04	0.54	
	Climbout	95%	20.80	1.72	3.41	4.43	0.54	
	Approach	30%	10.73	0.00	33.30	0.88	0.54	
	Idle	Idle	6.60	48.09	91.31	0.71	0.54	
P402[7] RR	Takeoff	100%	178.33	0.40	2.70	14.80	0.54	
	Climbout	85%	103.10	0.70	6.20	6.00	0.54	
	Idle	Idle	10.93	10.80	106.30	1.70	0.54	
JT8-W-29[7] W	Takeoff	Military	115.77	0.61	5.31	3.23	0.54	
	Climbout	8000 rpm	99.50	0.72	7.39	5.71	0.54	
	Approach	7430 rpm	72.83	0.93	12.61	7.30	0.54	
	Idle	Idle	22.00	9.76	47.16	2.46	0.54	
R-1820 W	Takeoff	BRP	19.43	94.68	531.73	1.72	0.54	
	Climbout	BRP	14.37	48.49	435.03	2.09	0.54	
	Approach	75% M/C	5.30	5.57	304.83	4.50	0.54	
	Idle	Idle	1.40	150.56	474.16	0.09	0.54	

TABLE 5-7: MODAL EMISSION RATES - MILITARY AIRCRAFT ENGINES[1]
(Concluded)

[1] SOURCE: Example of an Air Base Emissions Inventory for the County of San Diego (1987) (Aircraft Environmental Support Office, AESO Report No. 2-91, San Diego, California, March 1991), unless otherwise noted.

[2] MANUFACTURERS: All. - Allison, Con - Teledyne/Continental, CP - United Aircraft of Canada, GE - General Electric, Grt - Garrett AiResearch, Lyc - Avco/Lycoming, P&W - Pratt & Whitney, RR - Rolls-Royce, W - Curtis Wright

[3] SO_2 emissions based on national average sulfur content of aviation fuels from Aviation Turbine Fuels, 1989, Dickson, Cheryl L. and Paul W. Woodward, NIPER Report Number NIPER-164 PPS, National Institute for Petroleum and Energy Research, IIT Research Institute, Bartlesville, Oklahoma, March 1990.

[4] Source of data is AP-42, Compilation of Air Pollutant Emission Factors, Volume II: Mobile Sources, U.S. Environmental Protection Agency, Ann Arbor, Michigan, September, 1985. (Aircraft data from February 1980). Nitrogen oxides reported as NO2. HC refers to total hydrocarbons (Volatile organics, including unburned hydrocarbons and organic pyrolysis products).

[5] Includes all "condensable particulates," and thus may be much higher than solid particulates alone (AP-42).

[6] Source of data is FAA Aircraft Engine Emission Database (FAEED), U.S. Department of Transportation, Federal Aviation Administration, Office of Environment and Energy, 1991.

[7] Source of data is Summary Tables of Gaseous and Particulate Emissions from Aircraft Engines, Aircraft Environmental Support Office, AESO Report No. 6-90, San Diego, California, June 1990.

[8] Source of data is ICAO Engine Exhaust Emissions Databank, ICAO Committee on Aviation Environmental Protection, Working Group 3 Meeting, Mariehamn, Aland., October 1989.

[9] Includes all "condensable particulates," and thus may be much higher than solid particulates alone. Data are interpolated values assumed for calculational purposes, in the absence of experimental data (AP-42).

[10] Particulate data refers to TF34-GE-400A engine.

[11] Particulates refer to dry particulates only (AP-42).

[12] Source of Particulate data is Table 4. Particulate Mass Emissions From the TF-30-P-414 Engine, Summary Tables of Gaseous and Particulate Emissions from Aircraft Engines, Aircraft Environmental Support Office, AESO Report No. 6-90, San Diego, California, June 1990.

Adjust Approach and Climbout TIM to Represent Local Conditions

$TIM_{app\text{-}M}$ = 4 X (H/3000) (5-9)

$TIM_{clm\text{-}M}$ = 1.4 X [(H-500)/2500] (5-10)

$TIM_{app\text{-}M}$ - time in the approach mode for military aircraft, in minutes

$TIM_{clm\text{-}M}$ - time in the climbout mode for military aircraft, in minutes (assumes transition from takeoff to climbout occurs at 500 feet)

H - mixing height used in air quality modeling for time and region of interest

Calculate Emissions for Each Aircraft Type

E_{ij} = Σ (TIM_{jk}) X (FF_{jk}/1000) X (EI_{ijk}) X (NE_j) (5-11)

E_{ij} - total emissions of pollutant i, in pounds, produced by aircraft type j for one LTO cycle

TIM_{jk} - time in mode for mode k, in minutes, for aircraft type j

Ff_{jk} - fuel flow for mode k, in pounds per minute, for each engine used on aircraft type j (from Table 5-7)

Ei_{ijk} - emission index for pollutant i, in pounds of pollutant per one thousand pounds of fuel, in mode k for aircraft type j (from Table 5-7)

NE_j - number of engines used on aircraft type j (from Table 5-6)

Calculate Total Emissions for All Military Aircraft

$E_{Ti(M)}$ = ΣE_{ij} (5-12)

$E_{Ti(M)}$ - total emissions of pollutant i, in pounds, produced by all military aircraft operating in the region of interest (where j covers the range of military aircraft operating in the area)

After completing the emissions inventory for military aircraft, the overall inventory is complete, made up of emissions from commercial, general aviation, and military aircraft. The final three sections of the report address changes to the inventory due to alternative operating practices, addition of minor emission sources, and changes to the aircraft fleet in the future.

5.3 VARIATIONS TO THE INVENTORY CALCULATION PROCEDURE

There are several variations to the basic inventory procedure that can adjust the period covered by the inventory or address some operational procedures followed by some pilots or airlines that affect aircraft emissions. These adjustments to the inventory are discussed in this section.

5.3.1 Variability of Activity - Daily and Seasonal

The calculation procedure described in the methodology does not address daily or seasonal variations. If the air quality modeling period requires emissions data that accounts for these variations, certain adjustments must be made to the equations. The daily or seasonal variations will be exhibited in LTOs, mixing height, and idle time, primarily idle-out.

The references for determining LTOs in Section 5.2 give data on an annual basis and adjustment may be necessary to capture changes over time. The frequency of LTOs at most civil airports are reasonably uniform during daylight hours with lower activity during the night and uniform during week days with lower activity on the weekends, although some airports that cater to recreational flying may show higher activity on weekend days. For most large urban airports, LTOs are uniform on a monthly basis with a slight increase in activity during the summer, which typically is a time of high travel, although some regions may attract more travelers during the winter as a result of their climate. The seasonal variation in activity at smaller urban airports or airports that serve smaller cities may be more pronounced because of factors that affect travel on a local basis such as tourism or seasonal business activity. Obtaining specific information on daily and seasonal variation is difficult. The best source likely will be the airport operators, many of who keep some type of records of activity such as total number of LTOs, number of visitors/passengers, number of cars using the parking lots, or some similar measure that may be representative of the daily or seasonal variation in use of the airport. Another source of information on the daily and weekly variation of LTOs is published flight schedules. These schedules can be reviewed to evaluate the number of scheduled flights during daylight hours versus night-time hours or week day versus weekend. It would be difficult to use this source to evaluate seasonal variations.

Mixing height changes throughout the day and from season to season depending on meteorological conditions such as wind, cloud cover, temperature, and humidity. The adjustments to the time in approach and climbout mode should be based on a weighted average of the mixing heights for the time periods of interest, using variations in LTOs as the weighing factors. See Section 5.2.2 for more information about determining the mixing height.

Taxi/idle time may vary in proportion to variations in LTOs because they are partially a function of airport congestion such that the greater number of LTOs the more likely that airport congestion will increase the time for aircraft to taxi to the runway. The airlines' scheduling departments are the best sources of taxi/idle-time data and their projections typically show daily variations estimated for a particular season. Airport operators also may have information on taxi/idle time variation during a day or from one season to another. Availability of this data will be highly variable.

5.3.2 Operational Activity that Affects Aircraft Emissions

There are variations to standard operating procedures which pilots follow that will affect the aircraft's emissions. Two examples, which may be found in commercial operations, are single-engine taxiing and derated takeoff. Both of these procedures have the potential to save fuel as well as reduce emissions. Where detailed air quality modeling is being performed, these refinements may merit consideration. However, in most cases these procedures are performed at the discretion of the pilots and their use may not be consistent or predictable.

5.3.2.1 Reduced Engine Taxiing

Single-engine taxiing or reduced-engine taxiing is, as the name implies, taxiing with one or more engines shutdown. This is usually practiced during taxi-out. An aircraft can taxi using a single engine at idle without significantly increasing the emissions of that engine since adequate power for taxi generally is available at idle power setting. The emissions reductions are equal to the calculated emissions of the engines that are shutdown. The change to the calculation procedure to account for single-engine taxiing is shown in Equation 5-13.

$$E_{ij} = \Sigma (TIM_{jk}) \times (FF_{jk}/1000) \times (EI_{ijk}) \times (NE_{jk}) \quad (5\text{-}13)$$

E_{ij} - total emissions of pollutant i, in pounds, produced by aircraft type j

TIM_{jk} - time in mode for mode k, in minutes, for aircraft type j

FF_{jk} - fuel flow for mode k, in pounds per minute, for each engine used on aircraft type j (from Table 5-4)

EI_{ijk} - emission index for pollutant i, in pounds of pollutant per one thousand pounds of fuel, in mode k for aircraft type j (from Table 5-4)

NE_{jk} - number of engines used on aircraft type j, for mode k (from Table 5-2)

NE for the taxi/idle-out mode would be the number of engines actually used rather than the number on engines shown in Table 5–2.

5.3.2.2 Derated Take-off

A derated take-off is a procedure where the pilot sets the throttle for takeoff at less than 100%. The derated throttle setting is determined based on worst-case operating conditions, i.e., performance of the aircraft as though it were at maximum weight on a hot day. In some cases this may allow a takeoff throttle setting of 90% or less. To adjust the emissions calculations to account for this change, engine manufacturers recommend a linear interpolation between the takeoff and climbout fuel flow rates and emission factors. Information on the degree and frequency of derating for takeoff should be collected directly from the airlines.

Other operational factors may affect engine exhaust emissions, such as the use of full throttle, reverse thrust to decelerate the aircraft during landing. These effects may also be significant and are being evaluated by EPA. Any additional information on operational factors will be included in the next update to AP-42.

5.3.3 Particulate Emissions

As mentioned in Section 5.1.1.2, very few measurements have been made of particulate emissions from aircraft engines. However, for most turbine engines, EPA does limit the amount of smoke that may be emitted. This limit is specified as a smoke number. Attempts have been made to derive a correlation between smoke and particulates which could be used to create a particulate emission index based on smoke number. Thus far, these efforts do not match experimental results very closely. If particulates are of concern for the inventory area it may be of help to discuss the issue further with the engine manufacturers or the FAA Office of Environment and Energy. EPA will continue to investigate this area and may provide further information in the next update to AP-42.

5.4 OTHER EMISSION SOURCES

5.4.1 Auxiliary Power Units

When large aircraft are on the ground with their engines shut down, they need power and preconditioned air to maintain the aircraft's operability. If a ground-based power and air source is unavailable, an auxiliary power unit (APU), which is part of the aircraft, is operated. These units are essentially small jet engines, which generate electricity and compressed air. They burn jet fuel and generate exhaust emissions like larger engines. In use, APUs essentially run at full throttle. Table 5-8 lists several APUs and the aircraft on which they are installed. Emission factors for some of these APUs are provided in Table 5-9. Emission factors for APUs under load should be used where information is available on time of use.

TABLE 5-8: APU'S AND AIRCRAFT MODELS[1]

Auxiliary Power Unit (Shaft HP)	Aircraft Model	No. of Aircraft
COMMERCIAL		
Allied-Signal Aerospace Company Garrett Auxiliary Power Division		
GTP 30 Series	Fairchild F-27[2]	
GTCP 30 Series	Dassault-Bregue Falcon 20[2]	
	Jet Commander[2]	
GTCP 35-300	Airbus A-321[3]	
GTCP 36 Series (80 HP)	Airbus A320	132
	Aerospatiale ATR-42[2]	
	Brit. Aero. BAe 146	149
	Canadair CL600/CL601[2]	
	Dassault-Bregue Falcon 50[2]	
	Embraer EMB-120[2]	
	Fokker F-28	193
	Fokker F-100	56
	NAMC YS-11[2]	
	Saab Fairchild 340[2]	
GTC 85	Convair CV-580[2]	
GTCP 85 Series (200 HP)	Boeing B-707	206
	Boeing B-727	1,652
	Boeing B-737	1,825
	Lockheed L-100[2]	
	McDonnell Douglas DC-8	300
	McDonnell Douglas DC-9	842
	McDonnell Douglas MD-80	806
GTCP 331 Series (143 HP)	Airbus A-300-600	85
	Airbus A-310	175
	Airbus A-330[3]	
	Airbus A-340[3]	
	Boeing B-757	328
	Boeing B-767	343
	Boeing B-777[3]	
GTCP 660 (300 HP)	Boeing B-747	671
TSCP 700	Airbus A-300-B2	52
	Airbus A-300-B4	184

TABLE 5-8: APU'S AND AIRCRAFT MODELS[1]
(Continued)

Auxiliary Power Unit (Shaft HP)	Aircraft Model	No. of Aircraft
(142 HP)	McDonnell Douglas DC-10	365
	McDonnell Douglas MD-11	3
Hamilton Standard		
ST-6	Lockheed L-1011	226
Pratt & Whitney		
PW 901A	Boeing B-747	103
MILITARY[5]		
Allied-Signal Aerospace Company Garrett Auxiliary Power Division		
GTC 36-200	McDonnell Douglas F-18 Hornet	
GTCP 36 Series (80 HP)	Gulfstream II (VC-11A)	
	Gulfstream III (C-20A/B)	
	Lockheed S-3A Viking	
GTC 85 Series	Gulfstream I (VC-4A)	
	Lockheed C-130 Hercules	221
GTCP 85 Series	McDonnell Douglas C-9	23
	Lockheed C-141 StarLifter	254
	Boeing T-43	15
GTCP 660-4 (300 HP)	Boeing E-4 NEACP	4
JFS 100 Series	Douglas A-4M Skyhawk	
	Vought A-7D Corsair II	335[6]
JFS 190-1	McDonnell Douglas F-15 Eagle	895

TABLE 5-8: APU'S AND AIRCRAFT MODELS[1]
(Concluded)

[1] SOURCES: Civil - Federal Express Fleet Guide (Federal Express Aviation Services, Inc., January, 1991), unless otherwise noted.
Military - Reference Guide - Auxiliary Power Systems, Garrett Turbine Engine Company, Phoenix, Arizona.

[2] SOURCE: Reference Guide - Auxiliary Power Systems, Garrett Turbine Engine Company, Phoenix, Arizona.

[3] New aircraft scheduled to enter production.

[4] No. of Aircraft refers to Airbus A-300 aircraft.

[5] No. of Aircraft refers to the total number of aircraft in the Air National Guard, Air Force Reserve, Air Force, and Coast Guard inventories.
SOURCES: Air National Guard, Air Force Reserve, Air Force - "AIR FORCE Magazine," Air Force Association, May 1991.
Coast Guard - United States Coast Guard, 2100 Second Street, SW, Washington, DC 20593-0001, 202/267-0952.

[6] No. of Aircraft refers to 14 A-7 and 321 A-7D aircraft.

TABLE 5-9: MODAL EMISSION RATES - AUXILIARY POWER UNITS[1]

Model-Series (Shaft HP at Load)	Mode	Fuel Flow (lb/min)	Emission Rates (lb/1000 lb) HC	CO	NO_x	SO_2
GTC85-72 (200)	Load	3.50	0.13	14.83	3.88	0.54
GTCP100-54 (400)	Load	6.88	0.16	5.89	5.95	0.54
GTPC95-2 (300)	Load	4.88	0.36	3.20	5.65	0.54
T-62T-27 (100)	Load	1.70	7.79	42.77	3.94	0.54
WR27-1 (85)	Load	2.33	0.21	5.66	4.63	0.54

[1] SOURCE: Summary Tables of Gaseous and Particulate Emissions from Aircraft Engines (Aircraft Environmental Support Office, AESO Report No. 6-90, San Diego, California, June 1990), unless otherwise noted.

Where emission factors are unavailable for a specific APU, factors for an alternative unit of the same or similar horsepower should be used. It will be necessary to contact the airlines or military base commander directly to find out whether APUs are used regularly at a specific airport and, if so, how long an aircraft is expected to stay at a gate with the APU running. This information may be difficult to get.

5.4.2 Evaporative Emissions

For general aviation aircraft, there are evaporative emissions that result from refueling and fuel spillage. Emissions also occur from preflight checks of the aircraft and diurnal temperature cycles that cause the fuel tanks to vent. Refueling emissions are addressed in Volume I, Section 5.4.1. EPA is continuing to evaluate the other emission sources and may provide information in the next update to AP-42.

5.5 EFFECT OF FUTURE CHANGES TO THE FLEET

Airlines continually acquire newer aircraft, gradually phasing out older models. While commercial aircraft often remain in service for more than 25 years, over time, this process phases out the aircraft using engines that do not meet EPA's hydrocarbon emission standard. The current world aircraft fleet averages 12.4 years old according to the 1990 World Jet Inventory published by the Boeing Corporation.[247] Significant among the older aircraft are engines that do not meet the EPA standard such as the Spey MK511 and older JT8Ds and CF6-50s. The JT8Ds and CF6-50s are prevalent on B-727s, DC-9s, and DC-10s, many nearly 20 years old. As new aircraft are added to the fleet the older aircraft are the most likely to be retired. The effect is one of replacing older, dirty engines with newer engines on the new aircraft that are much cleaner from an emissions standpoint. Airport noise regulations also are forcing changes to the commercial aircraft fleet. National noise regulations which were recently passed by Congress are forcing airlines to phase out use of loud aircraft by 2000. This can be accomplished by retiring the loud, older aircraft, replacing their engines with newer, quieter ones, or modifying the engines to muffle the noise. The first two alternatives result in aircraft with reduced emissions. Because this legislation is so new, the airlines are yet to formulate specific plans meeting the requirements. However, as the equipment is updated, the changes to the fleet will be reflected in FAA's reports on aircraft activity. Since there is a significant engineering and development leadtime for producing new aircraft engines, most of the commercial aircraft to be added to the fleet in the next five to seven years will be powered by engines that are included in Tables 5-2, 5-3 and 5-4.

Since specific plans to upgrade their fleets have not been announced recently by the airlines, it is difficult to project what future changes will be and how they will effect the inventory of emissions for all locations. Some carriers will update their fleets more quickly

---

[247] World Jet Airplane Inventory. Boeing. Commercial Airplane Group. Year-End 1990.

than others so there may be changes that can be captured on an area specific basis. If it is desirable to project changes to the inventory for this source category, the predominant airlines for the airports included in the inventory area should be contacted for their specific plans. EPA is continuing to look at better data sources and methods for projecting changes to aircraft fleet emissions.

Another change that will affect future emissions from aircraft is the growth in travel. Air travel has experienced strong growth over the past several years and this growth is expected to continue for the foreseeable future. Many existing airports are near capacity and others will reach their capacity limits in the near future. This will have two effects: air traffic at small feeder airports and regional hubs will grow and the current major hubs will experience additional congestion. The net effect these changes will have on air quality is unclear. Increased congestion at some airports will increase taxi/idle times but the expanded use of smaller airports may relieve congestion at others.

5.6 CONVERTING FROM TOTAL HYDROCARBONS (THC) TO VOLATILE ORGANIC COMPOUNDS (VOC)

EPA recognizes that it may be necessary to determine the level of volatile organic compounds (VOC) emitted from aircraft engines. Since the emission factors for exhaust HC contained in this document represent total hydrocarbons (THC), this section illustrates the method that is recommended for converting THC to VOC emissions.[248]

5.6.1 Commercial and Military Conversions

The commercial and military aircraft fleets are dominated by turbine engines. Therefore, a single correction factor can be used to convert THC to VOC emissions for each aircraft category as follows.

$$VOC_{COMMERCIAL} = THC_{COMMERCIAL} \times 1.0947 \quad (5\text{-}14)$$

$$VOC_{MILITARY} = THC_{MILITARY} \times 1.1046 \quad (5\text{-}15)$$

[248] Memorandum from R. Cook to R. Wilcox. "Exhaust THC to VOC Correction Factors for Aircraft." July. 1992.

5.6.2 General Aviation and Air Taxi Conversions

The general aviation (GA) fleet and, to a much lesser extent, the air taxi (AT) fleet may have a significant proportion of piston engines, in addition to turbine engines. Therefore, separate correction factors should be used for each engine type within the respective aircraft categories if the detailed, aircraft-specific inventory methodology described in Section 5.2.4.1 was used to estimate THC emissions. Otherwise, if the alternative, fleet-average procedure described in Section 5.2.4.2 was used, a single correction factor can be used for each aircraft category.

Detailed Methodology

$$VOC_{GA\ PISTON} = THC_{GA\ PISTON} \times 0.9649 \quad (5\text{-}16)$$

$$VOC_{GA\ TURBINE} = THC_{GA\ TURBINE} \times 1.0631 \quad (5\text{-}17)$$

$$VOC_{AT\ PISTON} = THC_{AT\ PISTON} \times 0.9649 \quad (5\text{-}19)$$

$$VOC_{AT\ TURBINE} = THC_{AT\ TURBINE} \times 1.0631 \quad (5\text{-}20)$$

Alternative, Fleet-Average Methodology

$$VOC_{GA\ FLEET} = THC_{GA\ FLEET} \times 0.9708 \quad (5\text{-}18)$$

$$VOC_{AT\ FLEET} = THC_{AT\ FLEET} \times 0.9914 \quad (5\text{-}21)$$

6.0 EMISSIONS FROM LOCOMOTIVES

This chapter illustrates how a state or local agency can calculate emissions from locomotives within an inventory area.[249] Railroad locomotives used in the United States are primarily of two types: electric and diesel-electric.[250] Electric locomotives are powered by electricity generated at stationary power plants and distributed by either a third rail or overhead catenary system. Emissions are produced only at the electrical generation plant, which is considered a point source and therefore not of interest here. Diesel-electric locomotives, on the other hand, use a diesel engine and an alternator or generator to produce the electricity required to power its traction motors. Emissions produced by these diesel engines are of interest in emission inventory development. Emissions for hydrocarbons (HC), carbon monoxide (CO), oxides of nitrogen (NOx), sulfur dioxide (SO_2), and particulate matter (PM) from this source are covered in this chapter.

This chapter is a complete revision of the corresponding chapter in the previous edition of this document. In addition, this chapter also updates the emission factor information that appears in Compilation Of Air Pollutant Emission Factors, Fourth Edition And Supplements, AP-42. Subsequent to the publication of this document, AP-42 will be formally updated.

Other sources of emissions from railroad operations include the small gasoline and diesel engines used on refrigerated and heated rail cars. These engines are thermostatically controlled, working independently of train motive power, and fall in the category of off-highway equipment which are addressed elsewhere in this document. (See Section 3.3 of Volume IV.)

Railroads can be separated into three classes based on size: Class I , Class II, and Class III. Class I railroads[251] represent the largest railroad systems in the country. (See Appendix 6-1 for a complete list.) Because of their size, Class I railroads operate over a large geographic area. Also, they carry most of the interstate freight[252] and carry most of the passenger service. They are required to keep detailed records of their operations and to report yearly to the Interstate Commerce Commission (ICC).

---

[249] The term inventory area can be quite diverse and may refer to an area as large as a multi-state CMSA or an area as small as a county, or part of a county, within a state.

[250] A third type, steam locomotives, is used in very localized operations, primarily as tourist attractions, and emissions from these locomotives are insignificant. In addition, the particulate emissions from operating steam locomotives is so large that nearly all of it falls to the surface within 50 meters.

[251] Class I railroads are classified by the Interstate Commerce Commission as having annual revenues greater than $93.5 million.

[252] Class I railroads carried 93 percent of total freight revenues in 1989.

Class II[253] and III[254] railroads represent the remainder of the rail transportation system and generally operate within smaller, localized areas.[255] These smaller railroads are not subject to the same reporting requirements, and their recordkeeping may be less extensive. Also, their fleet of locomotives tends to be older, with the Class I railroads buying almost all of the new locomotives.

Locomotives within each of the Classes can perform two different types of operations: line haul[256] and yard (or switch). Line haul locomotives, which perform the line haul operations, generally travel between distant locations, such as from one city to another. Yard locomotives, which perform yard operations, are primarily responsible for moving railcars within a particular railway yard.

This chapter of the guidance document will be divided into six sections plus eight appendices. Section 6.1 will be an overview of the recommended methodology. Section 6.2 will specifically describe the recommended methods for calculating the emissions from various types of rail service based on generic or national operating characteristics. Section 6.3 will present procedures for tailoring the recommended methods to more closely reflect local operating conditions. Section 6.4 will introduce alternative methods which are not fully discussed in this chapter. Section 6.5 will discuss "remotored" locomotives; locomotives which have had their original diesel engines replaced by newer, more efficient power plants. Section 6.6 will illustrate the conversion factor method recommended for converting total hydrocarbons (THC) to volatile organic compound (VOC) emissions.

All correspondence pertaining to this chapter of the guidance document should be directed to:

Emission Planning and Strategies Division
U.S. EPA
2565 Plymouth Road
Ann Arbor, MI 48105
(313) 668-4200

---

[253] Class II railroads are classified by the Interstate Commerce Commission as having annual revenues greater than $18.7 million but less than $93.5 million.

[254] Class III railroads are classified by the Interstate Commerce Commission as having annual revenues less than $18.7 million.

[255] A "smaller" area can still be an area as large as a state. The term "smaller" is used in contrast with the large interstate areas which are covered by Class I railroads.

[256] In this chapter, line haul operations include intermodal freight service, mixed freight service, and passenger service.

6.1 OVERVIEW OF RECOMMENDED INVENTORY METHODOLOGY

Three steps are necessary in order to assess locomotive emissions within an inventory area. First, railroad operations are separated into three distinct categories: Class I line haul, Class II and Class III line haul, and yard. Second, emissions for each pollutant are calculated for each of the three categories using either the recommended methods described in Section 6.2 or, if circumstances explained later occur, the alternative methods described in Sections 6.3 or 6.4. Third, the total locomotive emissions in the inventory area are calculated by summing the quantities of each pollutant for each of the three categories.

The methods illustrated in this chapter are based on annual inventories and annual data. Developing inventories for shorter time periods is straight forward because railroad traffic is relatively constant throughout the year and therefore, less than annual calculations can be done by simple apportionment. In addition, the recommended methods described in Section 6.2 are based on a national locomotive fleet mix and average fuel consumption figures.

6.2 RECOMMENDED METHODS

The recommended methods for each of the three categories, as follows: Class I line haul, Class II and Class III line haul, and yard, are discussed separately below.

6.2.1 Class I Line Haul Locomotives

For Class I line haul locomotives, emissions are calculated by multiplying the amount of fuel consumed in the inventory area by the appropriate emission factors.

Inventory Area Emissions = Fuel Consumption x Emission Factors

6.2.1.1 Fuel Consumption

If Class I line haul locomotives only traveled within the inventory area, fuel consumption could be determined directly from the amount of fuel dispensed into the units. However, these line haul locomotives travel predominantly interstate. Hence, they do not necessarily burn the fuel in the same location where the fuel was pumped, making it impossible to determine fuel consumption in the area of interest in this manner.

In order to determine inventory area fuel consumption, it is necessary to allocate the total amount of fuel consumed "systemwide" for Class I railroads to the inventory area. This is done by dividing the traffic density (expressed in Gross Ton Miles or GTM) for each Class I railroad track segment within the inventory area by the systemwide fuel consumption index (expressed in Gross Ton Miles per gallon or GTM/gal) for that railroad. This process is repeated for each railroad.

In any given area, there will be only a few active Class I railroads, and the railroad company staff should be able to perform this step and provide the amount of fuel consumed within the inventory area on request. In addition, EPA has included a detailed explanation of how this step is performed based on published data and information which is generally available from each railroad.

Fuel consumption, for each Class I railroad within an inventory area, is therefore specifically calculated using the following formula:

Fuel Consumption = Traffic Density (GTM) / Fuel Consumption Index (GTM/gal)

The inventory area traffic density and the fuel consumption index are described separately below.

Traffic Density

For every track segment within a state, each Class I railroad maintains information on traffic density (GTM), length (miles), direction, and geographic location. Therefore, it is possible to calculate the traffic density for an inventory area by summing the traffic densities for each track segment or portion thereof within the inventory area.

This information can be obtained, for each area, either directly from the individual railroads or from the Association of American Railroads in Washington, D.C. The information should contain enough detail so that track segments or portions thereof can be assigned to the inventory area. However, if the agency is unable to perform this task, it may become necessary to obtain assistance from the Class I railroad in order to determine where the inventory area boundary intersects the track segment.

The gross ton mile information may be supplied in one of two ways. The first way is <u>without</u> the weight of the locomotives included. The second way is <u>with</u> the weight of the locomotives included. This distinction is important when calculating the fuel consumption index.

Fuel Consumption Index

The fuel consumption index (GTM/gal), for each Class I railroad within an inventory area, should be calculated by dividing the systemwide gross ton miles (GTM) by the systemwide fuel consumption (gal). See the following formula:

Fuel Consumption Index (GTM/gal) = System Gross Ton Miles/System Fuel Consumption

Each Class I railroad is required to report these statistics each year to the ICC in an annual report entitled "R-1." The R-1 report should be used, for each carrier, to obtain information on annual fuel consumption (Schedule 750: line 1), total gross ton miles including locomotives (Schedule 755: line 104), and, when needed, total gross ton miles excluding locomotives (Schedule 755: line 104 minus line 98). An example of these schedules is included in Appendix 6-2.

The fuel consumption index will vary depending on whether the weight of the locomotives is included in the calculation.[257] Also, calculating fuel consumption within the inventory area requires the multiplication of traffic density by fuel consumption index; therefore, it is important to match the units of each of these components. If traffic density is supplied without the weight of the locomotives included, then the fuel consumption index should be determined without the weight of the locomotives included in the calculation. If traffic density is supplied with the weight of the locomotives included, then the fuel consumption index should be determined with the weight of the locomotives included in the calculation.

The fuel consumption index, with locomotives, is calculated by dividing total gross ton miles with locomotives, Schedule 755: line 104, by the total fuel consumed, Schedule 750: line 1. The fuel consumption index, without locomotives, is calculated by dividing total gross ton miles without locomotives, Schedule 755: line 104 minus line 98, by the total fuel consumed, Schedule 750: line 1. Examples of these calculations are shown in Appendix 6-3.

6.2.1.2 Emission Factors

Now that fuel consumption has been calculated, inventory area emissions are determined by multiplying that value by the fleet average emission factors for each pollutant (expressed in pounds per gallon of fuel burned (lbs/gal). The recommended default emission factors for all line haul locomotives are shown in Table 6-1.

Table 6-1. Line Haul Locomotive Emission Factors[258]

Pollutant	Emission Factor (lbs/gal)
HC	0.0211
CO	0.0626
NOx	0.4931
SO_2*	0.0360
PM	0.0116

* SO_2 calculated based on a fuel sulfur content of 0.25 percent by weight.

Appendix 6-3 gives a full example of how to calculate emissions from the Class I line haul locomotives in an inventory area, using the Santa Fe railroad in the State of Illinois.

6.2.2 Class II and III Line Haul Locomotives

---

[257] The fuel consumption rate will be less if the weights of the locomotives are not included in the calculation.

[258] Locomotive Emission Factors for Inventory Guidance Document. Office of Mobile Sources. U.S. EPA. June 1991.

Similar to the recommended method for Class I line hauls, emissions from Class II and III line haul locomotives are calculated by multiplying the amount of fuel consumed in the inventory area by the appropriate emission factors.

Inventory Area Emissions = Fuel Consumption x Emission Factors

6.2.2.1 Fuel Consumption

Since Class II and III railroad companies are not required to file R-1 reports, annual fuel consumption should be obtained directly through interviews or letters with each Class II and III railroad operating within the inventory area. This approach is sufficient because, unlike Class I line haul operations, most Class II and III line haul travel is predominantly within a relatively small geographic area (see footnote 7). Therefore, in many instances, it is unnecessary to apportion system fuel use to an inventory area, because the fuel is consumed by the locomotives within the inventory area.

However, for the small number of Class II and III railroads operating outside the inventory area, EPA recommends simply allocating the fuel consumption by track length or track density (GTM). Each Class II and III railroad can supply both track length and track density information.[259] So, the percentage of fuel consumed is based on the percentage of track length or track density within the inventory area. If, for example, 30 percent of the track length, for a particular railroad, runs within the inventory area, then, in order to apportion the total fuel consumed in the inventory area, multiply the total fuel consumption for the railroad by 0.30.

[259] In addition, tabulations of track mile data may be available for counties, Metropolitan Statistical Areas (MSA), or urban areas from some state transportation agencies, or from the county or metropolitan planning organization within whose jurisdiction the study area is located. Alternatively, route miles can be obtained by direct measurement from an appropriate map, such as the County Series maps (obtained from the state transportation agency), U.S. Geologic Survey maps, U.S. Transportation Zone maps, or locally prepared maps.

6.2.2.2 Emission Factors

The emission factors for Class II and III line haul locomotives are assumed to be the same as Class I locomotives.[260] A complete list of the emission factors is provided in Table 6-1 (See Section 6.2.1.2).

6.2.3 Yard Operations

The recommended method for yard locomotives is different from the method used for line haul locomotives. Yard locomotive emissions, for each pollutant, are derived by multiplying the number of yard locomotives operating within the inventory area by the amount of emissions generated by each unit during the year. See the formula below:

Inventory Area Emissions = Number of Yard Locomotives x Annual Emissions Per Yard Locomotive

6.2.3.1 Number of Yard Locomotives

Since yard locomotives operate within the boundaries of a railway yard, it is possible to calculate the number of locomotives operating within an inventory area through interviews with the railway yard managers, who keep accurate records of yard locomotive operations. If this first approach proves unproductive, the number of yard locomotives can be determined by actually counting the units operating in each railway yard during a day. This is sufficient because the number of yard locomotives in operation each day remains relatively constant throughout the year. Switch yard engines are sent to railroad maintenance facilities according to regular schedules. When a particular yard locomotive is away getting maintenance or repair, the yard will replace the unit with another of approximately the same horsepower.

6.2.3.2 Emissions Per Yard Locomotive

EPA estimates that the average yard engine emits the following amount of each pollutant per year:

---

[260] In actuality, Class II and III railroads tend to have an older fleet mix. With local information, this could be included in the calculation of an appropriate emission factor, as shown in Section 6.3, but the improvement in accuracy is believed to be small.

Table 6-2. Annual Emissions Per Yard Locomotive

Pollutant	Annual Emissions (lbs/yr)
HC	4,174
CO	7,375
Nox	41,608
SO_2*	3,075
PM	1,138

* SO_2 calculated based on a fuel sulfur content of 0.25 percent by weight.

These emission levels were calculated as follows. EPA estimated that, based on a reasonable activity or duty cycle and typical fuel consumption rates, the average yard engine consumes 228 gallons of fuel per day.[261] Since yard locomotives can be assumed to operate 365 days a year[262] (this assumes that when a yard engine is taken in for repairs it is replaced during that period), the average yard engine consumes 82,490 (226 X 365) gallons of fuel per year.

EPA also determined that the average yard locomotive has the following emission factors (lbs/gal):

Table 6-3. Emission Factors For Yard Locomotives[263]

Pollutant	Emission Factor (lbs/gallon)
HC	0.0506
CO	0.0894
NOx	0.5044
SO_2*	0.0360
PM	0.0138

* SO_2 calculated based on a fuel sulfur content of 0.25 percent by weight.

---

[261] The fuel consumption data used for this calculation were considered proprietary by the locomotive manufacturers and hence could not be printed in this document.

[262] Some yards operate partially or not at all on weekends. Information on the operation schedule for yards may be easily obtained from the railroads, and the figure of 365 can be adjusted accordingly.

[263] Locomotive Emission Factors for Inventory Guidance Document. Office of Mobile Sources, U.S. EPA, June 1991.

Therefore, the annual emissions per yard locomotive, Table 6-2, were determined by multiplying the fuel consumption estimate (85,410 gal/year) by each emission factor in Table 6-3.

6.3 TAILORING METHODS

EPA recognizes that railroad operations may vary significantly from the national average and that some state and local air quality agencies may have access to more detailed information regarding the locomotive activity in their inventory area. Because of this, EPA has included two additional methodologies to allow these agencies to tailor the emissions calculations based on actual locomotive fleet, or roster, data and local operational characteristics. Using these tailoring methods is not required, but they have been included here should a state or local agency decide that a more precise calculation is desirable.

As explained in Section 6.2, the recommended method for calculating total emissions in an inventory area requires multiplying a fleet averaged emission factor by fuel consumption. An implicit element of the composite emission factor is the locomotive roster. If the actual roster for an inventory area is different from the one used in the recommended method, then the composite emission factor, calculated using the recommended method for the inventory area, could be different than if the composite emission factor were calculated using the actual locomotive roster.

Another element implicit in both the composite emission factor and the estimate of fuel consumption is the duty cycle which an engine goes through during operation. If the actual duty cycle in an inventory area is different from that assumed in the recommended method, then the values used in the recommended method for the inventory area could be different than if the values were calculated using the actual duty cycle for that area.

6.3.1 Locomotive Roster Tailoring Method

The roster tailoring method requires the development of an area specific roster, and subsequently the calculation of new fleet average emission factors. These new emission factors will then be substituted for the national fleet average emission factors in Section 6.2, and subsequently, will be multiplied by the fuel consumption figure to give the emissions for the inventory area. The tailoring method for both line haul and yard locomotives will be the same, but, the new tailored rosters should be calculated separately. The roster tailoring method is composed of the following steps:

6.3.1.1 Identify the locomotives in the area

The first step in the roster tailoring method is to identify all of the locomotives within an inventory area. Identification should be made based on make and model number (EMD GP9 for example).

EPA recognizes that identifying Class I line haul locomotives within an inventory area may be difficult because these locomotives travel predominantly interstate. EPA recommends that the agency performing the emissions inventory contact each Class I railroad within the inventory area and ask for an estimate of the number and type of locomotives operating within the area.

If it is not possible to identify the Class I line haul locomotives within the inventory area using the above procedure, EPA suggests, as a next best alternative, that the agency performing the emissions inventory contact each Class I railroad operating within the inventory area and request a copy of its systemwide locomotive roster. The agency may then assume that these locomotives operate on routes that enter or lie within the inventory area.

Identifying Class II and III line haul locomotives should be easier than identifying Class I line hauls, due to the fact that the former locomotives travel predominantly within a small area. EPA again recommends contacting each Class II and III railroad which operates within the inventory area and requesting a copy of its locomotive roster.

Identifying yard engines within an inventory area has already been explained in Section 6.2.3.1, and that approach should be followed here as well.

Once the locomotives have been identified, the agency calculating the emissions within the inventory area should create a list, including number of engines and model type, similar to the one listed as "Locomotive Model" in Appendix 6-4. "Locomotive Model" is a detailed listing of most of the locomotives models operating today which could exist in any fleet. (For Example: "GP9", "SD50", "U30C", etc.)

6.3.1.2 Determine the engine type

The second step is to convert from the locomotive model to a specific engine type for which EPA has emissions data. For example, a "GP9" model number would equate to a "16-567C" diesel engine type. Again, Appendix 6-4 shows how this conversion would appear.

6.3.1.3 Sum the total of the conversions

Once all of the conversions have been made, the third step is to calculate the new inventory area roster by summing the total of the conversions and then calculating the percent of the total for each engine type. Appendix 6-5 illustrates how this procedure was performed for the national roster used in Section 6.2.

It is important to remember that it is possible for some engines to perform both yard and line haul service (usually at different times). If this is the case, the same engine type may be entered as both a line haul and a yard engine.[264]

6.3.1.4 Calculate the new fleet average emission factors

The fleet average emission factors given in the recommended methods (Section 6.2) were derived using a national roster (Appendix 6-5). Since the roster changes with the tailoring method, the fleet average emission factors will change as well. The fourth step, therefore, is to re-calculate the emission factors using the new roster. To perform these calculations, simply multiply the new roster percentage for each engine by the emission factor (Appendix 6-6) for each pollutant for that engine. Appendix 6-7 illustrates how this is done.

6.3.1.5 Multiply the new emission factors by fuel consumption

Now that the new emission factors have been calculated for both line haul and yard locomotives based on the new roster, emissions are calculated by multiplying by fuel consumption. This procedure is the same as the recommended methodology which is explained in Section 6.2.

6.3.2 Duty Cycle Tailoring Method

The Agency believes that the duty cycles which are indicated in the recommended methods are reasonably representative of railroad operations across the nation, including nonattainment areas. These duty cycles, for line haul and yard locomotives, are shown in the following table and again in Appendix 6-9.

---

[264] When the national roster was calculated, locomotives which might perform both functions were not entered as indicated here; thus Appendix 6-5 does not show any overlap of any locomotives.

Table 6-4. Locomotive Duty Cycles

Throttle Notch	Time in Notch (%) Line Haul	Yard
8	1	1
7	3	0.5
6	4	0.5
5	4	1
4	5	2
3	4	4
2	4	7
1	4	7
Idle	49	77
Dynamic Brake	12	0
Total	100	100

If local conditions are likely to result in duty cycles that are substantially different from those shown above, State or local authorities may consider adjusting the emissions inventory methodology to incorporate this information. Any modifications, however, should be done in consultation with local railroad officials to determine if actual duty cycle measurements are available for this purpose, or if less specific adjustments are appropriate, based on past operating experience.

The most significant effect of altering the duty cycle would be to change the amount of fuel that is estimated for the inventory area.[265] Generally, the fuel consumption rate of a locomotive engine is determined by throttle notch position. The more time a locomotive spends in higher throttle notches, the more fuel it uses. Conversely, the more time spent in lower throttle notch positions, the less fuel is used. Therefore, the amount of fuel consumed is generally proportional to the time a locomotive spends in each throttle notch position.

The preferred approach for incorporating a tailored duty cycle into the analysis is for State or local authorities to recalculate the fuel consumption of each locomotive model in the inventory area, using the new time-in-notch data and the appropriate fuel consumption rate for each throttle position. Unfortunately, EPA is unable to provide notch-specific fuel consumption rates in this document because the locomotive manufacturers have claimed that such information is proprietary. Fortunately, there are two alternative methods for incorporating alternative duty cycles without having these data.

[265] This effect pertains only to the fuel consumption value obtained by apportioning systemwide fuel to the inventory area (Section 6.2.1.1 or 6.2.2.1), or the estimated fuel consumption value for each yard locomotive (Section 6.2.3.2).

The first approach is to use the information obtained in consultation with railroad officials to develop a "general correction factor" that can be applied to the fuel consumption estimates determined with the recommended methods in Section 6.2. The second approach is to contact EPA at the address previously provided in this chapter with the alternative duty cycle data. After analyzing this information in conjunction with the State or local agency, EPA could provide a "tailored correction factor" for the inventory area.

A secondary effect of altering the duty cycle is to change the emission factors (i.e., pounds of pollutant per gallon of fuel). This occurs because the combustion characteristics of the engine vary by throttle notch position. Also, the significance of this effect varies for each of the primary pollutants from this source (i.e., HC, CO, and NOx).

In most internal combustion engines, fuel is usually burned more nearly completely as the throttle position increases. Generally, this results in a smaller mass of certain pollutants being produced for each unit of fuel consumed. For locomotives, this effect is most significant for HC emissions, less so for CO emissions, and essentially non-existent for NOx emissions (i.e., the amount of this pollutant is essentially constant per unit of fuel regardless of notch position). Therefore, only state or local agencies that are particularly concerned about HC emissions from railroad operations are likely to benefit from including this effect in the inventory.

Accounting for this phenomenon is similar to that discussed above for estimating the amount of fuel used in the inventory area, because the preferred methodology involves the use of proprietary notch-specific fuel consumption data. As a consequence, any agency wishing to include this aspect of duty cycle tailoring in the emissions inventory must contact EPA with the requisite information for a customized composite emission factor.

6.3.3 SO_2 Tailoring Method

The emission factors for SO_2 are calculated based on the amount of sulfur contained in the fuel.[266] These emission factors are based on a sulfur content of 0.25 percent sulfur by weight. EPA recognizes that the amount of sulfur contained in diesel fuel may vary significantly from one inventory area to another. In order tailor to sulfur emission factors based on the inventory area fuel sulfur content, a recalculation should be performed by first calculating an adjustment factor and then multiplying by the sulfur emission factor.

Tailored Sulfur = Adjustment Factor x Guidance Document SO_2 Emission Factor.

[266] It is assumed that all of the elemental sulfur in the fuel is oxidized into SO_2.

The adjustment factor is determined by dividing the inventory area sulfur percentage by the existing sulfur percentage. If the inventory area had a fuel sulfur content of 0.20 percent, then the adjustment factor would be 0.80 (0.20/0.25). In order to recalculate the emission factor, multiply the sulfur emission factor, 0.0340 lbs/gal, by the adjustment factor, 0.80, to get an answer of 0.0272 lbs/gal.

6.4 ALTERNATIVE METHOD

EPA believes that the line haul locomotive methods presented in this chapter are practical, feasible, and accurate. However, if for some unforeseen reason it is not possible to acquire, or apportion, fuel consumption as required by these methods, an alternative approach, such as the one described in EPA's Report to Congress On Railroad Emissions - A Study Based On Existing Data, (no date available at time of printing) may be appropriate. This particular alternative, if needed, may be most appropriate for inventorying congested urban areas. If it proves necessary to consider any alternatives, please contact EPA at the address previously provided in this chapter for additional details and assistance.

6.5 RE-ENGINED LOCOMOTIVES

EPA recognizes that some older locomotives have been re-engined with newer, more efficient engines. Some of these engines are manufactured by EMD and GE and are most likely represented in the data base. However, a small number of older GE and EMD chassis also have been retrofitted with engines from other manufacturers, such as Caterpillar, Sulzer (Germany), and Cummins. EPA acknowledges the existence of these engines, but because there are so few engines of this type in the fleet and because EPA has not been able to obtain emission data on these engines, they are not included in the data base.

6.6 CONVERTING FROM TOTAL HYDROCARBONS (THC) TO VOLATILE ORGANIC COMPOUNDS (VOC)

EPA recognizes that it may be necessary to determine the level of volatile organic compounds (VOC) emitted from locomotives. Since the emission factors for HC contained in this document represent total hydrocarbons as measured by a flame ionization detector (THC_{FID}), this section illustrates the conversion factor method recommended for converting THC_{FID} to VOC emissions.

The method listed below was derived from an April 21, 1992, EPA memorandum from Greg Janssen to Phil Lorang entitled "THC to VOC Correction Factors for Nonroad Emissions Inventories" (the memorandum). Since locomotive emissions are created by large diesel engines, and since locomotive diesel correction factors do not exist, EPA has assumed that the correction factors for heavy-duty diesel vehicles (HDDV) can also be used as locomotive correction factors.

The method for converting THC to VOC was based on the methodology for nonroad conversion and is as follows:

$$VOC_{LOCOMOTIVE} = THC_{FID\ LOCOMOTIVE} \times \frac{NMHC_{FID\ HDDV}}{THC_{FID\ HDDV}} \times \frac{VOC_{HDDV}}{NMHC_{FID\ HDDV}}$$

where

$THC_{FID\ LOCOMOTIVE}$ represents the total hydrocarbon emissions measured from locomotives by FID,

$\frac{NMHC_{FID\ HDDV}}{THC_{FID\ HDDV}}$ is a non-methane hydrocarbon correction factor and represents the ratio of non-methane hydrocarbons to total hydrocarbons, as emitted by heavy duty diesel vehicles, and

$\frac{VOC_{HDDV}}{NMHC_{FID\ HDDV}}$ is a VOC correction factor and represents the ratio of VOC to non-methane hydrocarbons, as emitted by heavy duty diesel vehicles.

Using the same method illustrated in Attachment 3 of the memorandum, EPA determined that $NMHC_{FID\ HDDV}$ = 1.07 g/mile and $THC_{FID\ HDDV}$ = 1.10 g/mile.[267] Furthermore, the VOC correction factor, as derived for HDDV in Appendix 3 in the memorandum, was determined to equal 1.0332.

Thus, EPA has determined that the correction factor to determine VOC emissions from locomotives is as follows:

$$VOC_{LOCOMOTIVE} = THC_{FID\ LOCOMOTIVE} \times \frac{1.07}{1.10} \times 1.0332$$

or

$$VOC_{LOCOMOTIVE} = THC_{FID\ LOCOMOTIVE} \times 1.005$$

[267] Springer, 1979 (EPA-460/3-79-007) (PP. 47,98)

Appendix 6-1

Class I Railroad Systems In The United States as of 4/91*:

- AMTRAK

- Atchison, Topeka and Santa Fe Railway Company (Santa Fe)
  (AZ, CA, CO, IL, IA, KS, LA, MO, NB, NM, OK, TX)

- Burlington Northern Railroad Company
  (AL, AR, CA, CO, FL, IA, ID, IL, KS, KY, MN, MO, MT, MS, NM, ND, NE, OK, OR, SD, TN, TX, WA, WI, WY)

- Chicago and North Western Transportation Company

- Consolidated Rail Corporation (Conrail)
  (CT, D.C., DE, IL, IN, KY, MA, MD, MI, NJ, NY, OH, PA, VA, WV)
- CSX Corporation
  CSX Transportation, Inc. (Includes Chessie System and Seaboard System)
  (AL, DE, D.C., FL, GA, IN, IL, KY, LA, MD, MI, MS, NC, OH, PA, SC, TN, VA, WV)
- Denver and Rio Grande Western Railroad

- Florida East Coast Railway
  (FL)
- Grand Trunk Corporation
  Grand Trunk Western Railroad
- Guilford Industries
  Boston and Maine Corporation

- Illinois Central Railroad
  (IL, TN, KY, MS, LA)
- Kansas City Southern Railway

- Norfolk Southern Corporation
  Norfolk and Western Railway
  Southern Railway System

- Soo Line Railroad

- Southern Pacific Transportation Company
  St. Louis Southwestern Railway

- Union Pacific Railroad Corporation
  Missouri Pacific Railroad

*Sources: Association of American Railroads and Federal Railroad Administration

Appendix 6-2

Copy of schedules 750 and 755 from R-1 Report for Santa Fe, 1990.

750. CONSUMPTION OF DIESEL FUEL
(Dollars in Thousands)

LOCOMOTIVE

Kind of locomotive service	Diesel	
Line No. (a)	Diesel oil (gallons) (b)	Line No.
1. Freight	304,370,694	1
2. Passenger		2
3. Yard switching	7,522,208	3
4. Total	311,892,902	4
5. COST OF FUEL $(000)	226,890	5
6. Work Train	75,845	6

755. RAILROAD OPERATING STATISTICS - Concluded

Line No.	Cross Check	Item Description (a)	Freight Train	Passenger Train (c)	Line No.
		6. Gross Ton-Miles (thousands) (K)	xxxxxx	xxxxxx	
98		6-01 Road Locomotives	24,631,118		98
		6-02 Freight Trains, Crs., Cnts., and Caboose	xxxxxx	xxxxxx	
99		6-020 Unit Trains	10,345,677	xxxxxx	99
100		6-021 Way Trains	4,002,717	xxxxxx	100
101		6-022 Through Trains	136,446,265	xxxxxx	101
102		6-03 Passenger-Trains, Crs., & Cnts.			102
103		6-04 Non-Revenue	11,215,578	xxxxxx	103
104		6-05 TOTAL (lines 98-103)	186,661,355		104

Appendix 6-3

Sample Calculation of Inventory Area Fuel Consumption for Santa Fe in Illinois

Inventory Area Emissions = Fuel Consumption x Emission Factors

Fuel Consumption = Traffic Density x Fuel Consumption Index

Traffic Density Without Locomotives

If the traffic density data for Illinois are supplied without locomotive weight included, emissions would be calculated as followed:

Traffic Density

Santa Fe Traffic Density in Illinois:
(Furnished by Santa Fe without
locomotives) = ...7,329,000,000 GTM

Fuel Consumption Index

Santa Fe System
Fuel Consumption:
Schedule 750: line 1 = ...304,370,694 gal

Santa Fe System
Gross Ton Miles (w/o locomotives):
Schedule 755: line 104 - line 98
(186,661,355,000 - 24,631,118,000) = 162,030,237,000 GTM

Santa Fe Fuel Consumption
Index (w/o locomotives)
(162,030,118,000 / 304,370,694) = ...532 GTM/gal

Fuel Consumption

Fuel Consumption for
Santa Fe in Illinois
(7,329,000,000 / 532) = ...13,776,316 gal

Traffic Density With Locomotives

If the traffic density data for Illinois are supplied with locomotive weight included, emissions would be calculated as follows:

Traffic Density

Santa Fe Traffic Density in Illinois:
(Furnished by Santa Fe with
locomotives) = ...8,445,000,000 GTM

Fuel Consumption Index

Santa Fe System
Fuel Consumption:
Schedule 750: line 1 = ...304,370,694 gal

Santa Fe System
Gross Ton Miles (with locomotives):
Schedule 755: line 104 = ... 186,661,355,000 GTM

Santa Fe Fuel Consumption
Index (with locomotives)
(186,661,355,000 / 304,370,694) = ...613 GTM/gal

Fuel Consumption

Fuel Consumption for
Santa Fe in Illinois
(8,445,000,000 / 613) = ...13,776,508 gal

Emission Factors

The emission factors for line haul locomotives are located in Table 6-1 above. Emissions can now be calculated as follows:

$$\text{Emissions (Tons)} = \frac{\text{Emission Factor (lbs/gal) x Fuel Consumption (gal)}}{2{,}000}$$

Example for HC: (0.0211 X 13,776,508)/2,000 = 150.16 Tons

Appendix 6-4

Conversions from Locomotive Model to Engine Type

EMD

Locomotive Model	HP	Engine Type
E8A	2250	12-567BC
F40C	3200	16-645E3
F40PH	3000	16-645E3B
F40PH-2	3200	16-645E3B
F45	3600	20-645E3
FP45	3600	20-645E3
GP7	1500	12-567BC
GP9	1750	16-567C
G18U	1100	8-645E
G18W	1100	8-645E
G18A1A	1100	8-645E
GP15-1	1500	12-645E
GP15T	1650	8-645E3C
GP18	1800	16-567C
GP20	2000	16-567C
GP28	1800	16-567C
GP30	2250	12-645E3
GP35	2500	12-645E3
GP38	2000	16-645E
GP38-2	2000	16-645E
GP38-2P	2000	16-645E
GP38-AC	2000	16-645E
GP39-2	2300	12-645E3B
GP40	3000	16-645E3
GP40-2	3000	16-645E3B
GP40-P	3000	16-645E3B
GP40P-2	3000	16-645E3B
GP40X	3500	16-645F3
GP49	2850	12-645F3B
GP50	3500	16-645F3
GP59	3200	12-710G3/G3A+
GP60	3600	16-710G3/G3A*
GP60M	3800	16-710G3A

+For locomotives built after 4/91, use the 12-710G3A
* For locomotives built after 4/91, use the 16-710G3A

EMD

Locomotive Model	HP	Engine Type
MP15AC	1500	12-645E
MP15	1500	12-645E
MP15T	1650	8-645E3C
SD9	1750	16-567C
SD35	2500	12-645E3
SD38	2000	16-645E
SD38-2	2000	16-645E
SD38AC	2000	16-645E
SD39	2500	12-645E3
SD40	3000	16-645E3
SD40-2	3000	16-645E3
SD40A	3000	16-645E3
SD40T2	3000	16-645E3
SD40X	3500	16-645F3
SD45	3600	20-645E3
SD45-2	3600	20-645E3
SD50	3500	16-645F3B
SD60	3800	16-710G3
SD60M	3800	16-710G3/G3A*
SDF40-2	3000	16-645E3
SDF45	3600	20-645E3
SDP45	3600	20-645E3
SDL39	2300	16-645E3
SDP40	3000	16-645E3
SDP40FM	3000	16-645E3
SW7	1200	12-567BC
SW900	900	8-645E
SW1000	1000	8-6453
SW1001	1000	8-645E
SW1200	1200	12-567BC
SW1500	1500	12-645E

* For locomotives built after 4/91, use the 16-710G3A

GE

Locomotive Model	HP	Engine Type
B23-7	2250	12-2500
B30-7	3000	16-3000
B30-7A	3000	16-3000
B30-7AB	3000	16-3000
B36-7	3600	16-3600
B36-8	3600	16-3600
B39-8	4100	16-4100
B40-8	4100	16-4100
B40-8W	4100	16-4100
C30-7	3000	16-3000
C30-7A	3000	16-3000
C32-8	3000	16-3000
C36-7	3600	16-3600
C39-8	4100	16-4100
DASH 8-32B	2500	12-2500
DASH 8-40C	4100	16-4100
U23B	2500	12-2500
U23C	2500	12-2500
U25C	2500	12-2500
U25C	2500	12-2500
U28B	3000	12-3000
U28C	3000	12-3000
U30B	3000	12-3000
U30C	3000	12-3000
U33B	3000	16-3000
U33C	3000	16-3000
U34CG	3600	16-3600
U36B	3600	16-3600
U36C	3600	16-3600
U36CG	3600	16-3600

Appendix 6-5

National Fleet Percentages

Category	Engine Type	Number	Percentage of Total
Line Haul	16-645E3	1562	16.1
	16-645E3B	2693	27.7
	16-645F3	232	2.4
	16-645F3B	400	4.1
	20-645E3	723	7.4
	16-710G3	537	5.5
	16-710G3A	250	2.6
	12-2500	843	8.7
	12-3000	145	1.5
	12-3300	0	0.0
	16-3000	801	8.3
	16-3600	451	4.6
	16-4100	1029	10.6
	12-645F3B	6	0.1
	12-710G3	2	0.0
	12-710G3A	34	0.4
Yard	12-567BC	131	2.9
	12-645E	1216	26.7
	16-567C	1279	28.1
	16-645E	1763	38.8
	12-645E3B	125	2.7
	12-645E3	32	0.7
	8-645E	1	0.0
	8-645E3C	42	0.8

Appendix 6-6

Emission Factors For Locomotives

Eng. Type	HP	Operation	Emission Factors (lbs/gal) HC	CO	NOx	PM
EMD 8-645E	1100	Yard	0.0525	0.1571	0.4984	0.0162
EMD 8-645E3C	1650	Yard	0.0223	0.0477	0.7232	0.0121
EMD 12-567BC	1200	Yard	0.2209	0.1608	0.3936	0.0165
EMD 12-645E	1500	Yard	0.0321	0.0752	0.5141	0.0138
EMD 12-645F3B	2950	Line Haul	0.0155	0.0490	0.4962	0.0104
EMD 12-645E3	2300	Line Haul	0.0192	0.0939	0.5156	0.0113
		Yard	0.0277	0.1130	0.5803	0.0135
EMD 12-645E3B	2500	Line Haul	0.0196	0.0878	0.5475	0.0115
		Yard	0.0266	0.0761	0.5107	0.0133
EMD 12-710G3	3200	Line Haul	0.0155	0.0373	0.4306	0.0103
EMD 12-710G3A	3200	Line Haul	0.0070	0.0447	0.4568	0.0108
EMD 16-567C	1750	Line Haul	0.0284	0.0857	0.5109	0.0114
		Yard	0.0435	0.0784	0.4452	0.0136
EMD 16-645E	2000	Line Haul	0.0192	0.0604	0.5443	0.0114
		Yard	0.0308	0.0747	0.5243	0.0136
EMD 16-645E3	3000	Line Haul	0.0198	0.0721	0.4744	0.0114
EMD 16-645E3B	3000	Line Haul	0.0160	0.0460	0.5236	0.0071
EMD 16-645F3	3500	Line Haul	0.0178	0.0529	0.6060	0.0116
EMD 16-645F3B	3600	Line Haul	0.0153	0.0295	0.6687	0.0111
EMD 16-710G3	3600	Line Haul	0.0170	0.0244	0.4986	0.0111
EMD 16-710G3A	3600	Line Haul	0.0091	0.0935	0.4862	0.0110
EMD 20-645E3	3800	Line Haul	0.0200	0.0528	0.4590	0.0113
GE 12-2500	2500	Line Haul	0.0229	0.0970	0.4271	0.0117

Emission Factors For Locomotives

Eng. Type	HP	Operation	Emission Factors (lbs/gal) HC	CO	NOx	PM
GE 12-3000	3000	Line Haul	0.0229	0.0852	0.4572	0.0115
GE 16-3000	3000	Line Haul	0.0354	0.1025	0.4471	0.0196
GE 12-3300	3300	Line Haul	0.0229	0.0852	0.4572	0.0115
GE 16-3600	3600	Line Haul	0.0311	0.0780	0.4663	0.0173
GE 16-4100	4100	Line Haul	0.0302	0.0659	0.4851	0.0171

Appendix 6-7

Sample Roster Tailoring For Line Haul Locomotives*

Step 1 - Identify the locomotives in the area

Assume that there are ten line haul locomotives which operate within the inventory area: 5 - EMD GP59's and 5 - GE C36-7's

Step 2 - Determine the data base equivalent

According to the list in Appendix 6-5, the two locomotives convert as follows:

Locomotive	Data Base Equivalent
5 - GP59	5 - 16-710G3
5 - C36-7	5 - 16-3600

Step 3 - Calculate the tailored roster

The new tailored roster for line haul locomotives looks as follows:

Line Haul

Engine Type	Population	Fraction of Total
16-710G3	5	0.50
16-3600	5	0.50
	Total 10	1.00

Step 4 - Locomotive emissions factors

Select the appropriate emission factors for each engine type from Appendix 6-6. The emission factors for each locomotive in the tailored roster are:

EMD 16-710G3		GE 16-3600	
Pollutant	lbs/gal	Pollutant	lbs/gal
HC	0.0161	HC	0.0274
CO	0.0233	CO	0.0624
NOx	0.4805	NOx	0.4655
PM	0.0107	PM	0.0157
SO_2	0.0360	SO_2	0.0360

*Note: The same procedures would be followed for yard locomotives.

Step 5 - Calculate new emission factors

The new fleet average emission factors are calculated by multiplying the engine roster percentage by the engine emission factor and then summing the weighted emission factors for all engines. For this example, the result is as follows:

HC emission factor: $[(0.50 \times 0.0161) + (0.50 \times 0.0274)] = 0.0218$

Appendix 6-8

Duty Cycles

Line haul duty cycle data were taken from the Average California Profile as determined in the Booz-Allen & Hamilton, Inc. report entitled Locomotive Emission Study, 1991. It represents the most extensive analysis of time in notch profiles for line haul locomotives operating in both mountainous and flat terrain and, in terms of actual testing done, it is without equal. It is also reasonably consistent with the existing EMD and GE line haul duty cycles. EPA believes that the Average California Profile adequately represents average line haul locomotive travel throughout the nation.

Line Haul

Notch	Percent of Time In Notch	Hrs Per Day In Notch
8	11	2.64
7	3	0.72
6	4	0.96
5	4	0.96
4	5	1.20
3	4	0.96
2	4	0.96
1	4	0.96
Idle	49	11.76
Dyn Brk	12	2.88

Yard

Yard duty cycle data were taken from the Report to Congress. This duty cycle was the same as the EMD duty cycle and is consistent with most other recommended duty cycles.

Notch	Percent of Time In Notch	Hrs Per Day In Notch
8	1	0.24
7	0.5	0.12
6	0.5	0.12
5	1	0.24
4	2	0.48
3	4	0.96
2	7	1.68
1	7	1.68
Idle	77	18.48