United States
Environmental Protection
Agency

Office of Solid Waste
and Emergency Response
Washington DC 20460

SW-871R
September 1982

EPA

# Management of Hazardous Waste Leachate

## PREFACE

The land disposal of hazardous waste is subject to the requirements of Subtitle C of the Resource Conservation and Recovery Act of 1976. This Act requires that the treatment, storage, or disposal of hazardous wastes after November 19, 1980 be carried out in accordance with a permit. The one exception to this rule is that facilities in existence as of November 19, 1980 may continue operations until final administrative disposition is made of the permit application (providing that the facility complies with the Interim Status Standards for disposers of hazardous waste in 40 CFR Part 265). Owners or operators of new facilities must apply for and receive a permit before beginning operation of such a facility.

The Interim Status Standards (40 CFR Part 265) and some of the administrative portions of the Permit Standards (40 CFR Part 264) were published by the Environmental Protection Agency in the Federal Register on May 19, 1980. The Environmental Protection Agency published interim final rules in Part 264 for hazardous waste disposal facilities on July 26, 1982. These regulations consist primarily of two sets of performance standards. One is a set of design and operating standards separately tailored to each of the four types of facilities covered by the regulations. The other (Subpart F) is a single set of ground-water monitoring and response requirements applicable to each of these facilities. The permit official must review and evaluate permit applications to determine whether the proposed objectives, design, and operation of a land disposal facility will comply with all applicable provisions of the regulations (40 CFR 264).

The Environmental Protection Agency is preparing two types of documents for permit officials responsible for hazardous waste landfills, surface impoundments, land treatment facilities and piles: Draft RCRA Guidance Documents and Technical Resource Documents. The draft RCRA guidance documents present design and operating specifications which the Agency believes comply with the requirements of Part 264, for the Design and Operating Requirements and the Closure and Post-Closure Requirements contained in these regulations. The Technical Resource Documents support the RCRA Guidance Documents in certain areas (i.e., liners, leachate management, closure, covers, water balance) by describing current technologies and methods for evaluating the performance of the applicant's design. The information and guidance presented in these manuals constitute a suggested approach for review and evaluation based on good engineering practices. There may be alternative and equivalent methods for conducting the review and evaluation. However, if the results of these

methods differ from those of the Environmental Protection Agency method, they may have to be validated by the applicant.

In reviewing and evaluating the permit application, the permit official must make all decisions in a well defined and well documented manner. Once an initial decision is made to issue or deny the permit, the Subtitle C regulations (40 CFR 124.6, 124.7, and 124.8) require preparation of either a statement of basis or fact sheet that discusses the reasons behind the decision. The statement of basis or fact sheet then becomes part of the permit review process specified in 40 CFR 124.6 through 124.20.

These manuals are intended to assist the permit official in arriving at a logical, well defined, and well documented decision. Checklists and logic flow diagrams are provided throughout the manuals to ensure that necessary factors are considered in the decision process. Technical data are presented to enable the permit official to identify proposed designs that may require more detailed analysis because of a deviation from suggested practices. The technical data are not meant to provide rigid guidelines for arriving at a decision. The references are cited throughout the manuals to provide further guidance for the permit officials when necessary.

There was a previous version of this document dated September 1980. The new version supplies the September 1980 version.

## ABSTRACT

This document has been prepared to provide guidance for permit officials and disposal site operators on available management options for controlling, treating, and disposing of hazardous waste leachates. It discusses considerations necessary to develop sound management plans for leachate generated at surface impoundments and landfills. Because hazardous waste leachate management is an area where there is little past experience, this manual draws heavily upon experience in other related areas.

The manual provides a logical thought process for arriving at a reasonable treatment process train for given leachates. Furthermore, sufficient factual information is provided so that users can readily identify a few potential treatment alternatives. Having identified such alternatives, users then are given sufficient guidance so that final choices can be made.

The manual begins with a brief discussion of factors that influence leachate generation. This is followed by a presentation of data on leachate characteristics at actual waste disposal sites. Principal options for dealing with hazardous waste leachate are identified. Subsequently, technology profiles are developed for processes having potential application to leachate treatment. Treatability data and information on by-products, and costs supplement process descriptions and an assessment of process applicability.

A key section enumerates factors which influence treatment process selections and provides a suggested approach for systematically addressing each. Selected hypothetical and actual leachate situations are used as examples for applying the approach to the selection of appropriate treatment processes.

Other sections address monitoring, safety, contingency plans/emergency provisions, equipment redundancy/backup, permits, and surface runoff. Each of these topics are important considerations necessary for effective management of hazardous waste leachate.

CONTENTS

Preface ..... iii
Abstract ..... v
Figures ..... vi
Tables ..... xii
Acknowledgment ..... xiii

1. INTRODUCTION ..... 1-1

2. OVERVIEW OF LEACHATE GENERATION..... 2-1

2.1 General Discussion ..... 2-1

2.2 Factors Affecting Leachate Generation and Characteristics ..... 2-2

2.2.1 Physical Influences ..... 2-2

2.2.1.1 Liquid Characteristics ..... 2-2
2.2.1.2 Solid Characteristics ..... 2-2
2.2.1.3 Physical Transformations ..... 2-3

2.2.2 Chemical Influences ..... 2-3

2.2.2.1 Solubility ..... 2-3
2.2.2.2 Chemical Transformations ..... 2-4

2.2.3 Biological Influences ..... 2-5

2.3 References ..... 2-5

3. LEACHATE CHARACTERISTICS ..... 3-1

3.1 General Discussion ..... 3-1

3.2 Leachate Characteristics at Actual Sites ..... 3-3

3.3 Leachate Categorization ..... 3-17

3.4 References ..... 3-20

4. HAZARDOUS WASTE LEACHATE MANAGEMENT OPTIONS ..... 4-1

4.1 General Discussion ..... 4-1

4.2 Hazardous Waste Treatment ..... 4-3

4.3 Disposal Site Managment ..... 4-5

4.4 Leachate Management ..... 4-9

4.4.1 Off-Site Treatment/Disposal Options .... 4-9

CONTENTS (continued)


4.4.2. On-Site Treatment/Disposal ..... 4-11
4.5 Summary ..... 4-13
5. LEACHATE TREATMENT TECHNOLOGIES ..... 5-1
5.1 General Discussion ..... 5-1
5.2 Treatability of Leachate Constituents ..... 5-2
5.3 Unit Process Application Potential ..... 5-4
5.3.1 Biological Treatment ..... 5-5
5.3.2 Carbon Adsorption ..... 5-6
5.3.3 Catalysis ..... 5-6
5.3.4 Chemical Oxidation ..... 5-6
5.3.5 Chemical Reduction ..... 5-7
5.3.6 Chemical Precipitation ..... 5-7
5.3.7 Crystallization ..... 5-8
5.3.8 Density Separation ..... 5-8
5.3.9 Dialysis/Electrodialysis ..... 5-9
5.3.10 Distillation ..... 5-9
5.3.11 Evaporation ..... 5-9
5.3.12 Filtration ..... 5-9
5.3.13 Flocculation ..... 5-10
5.3.14 Ion Exchange ..... 5-10
5.3.15 Resin Adsorption ..... 5-11
5.3.16 Reverse Osmosis ..... 5-12
5.3.17 Solvent Extraction ..... 5-13
5.3.18 Stripping ..... 5-13
5.3.19 Ultrafiltration ..... 5-13
5.3.20 Wet Oxidation ..... 5-14
5.4 Evaluation of Unit Processes ..... 5-14
5.5 By-Product Considerations ..... 5-18
5.6 Treatment Process Costs ..... 5-28
5.7 References ..... 5-31
6. LEACHATE TREATMENT PROCESS SELECTION ..... 6-1
6.1 General Discussion ..... 6-1
6.2 Performance Requirements ..... 6-2

CONTENTS (continued)


6.3 Treatment Facility Staging ..... 6-5

6.4 Treatment Process Selection Methodology ..... 6-6

6.4.1 Disposal Site With Existing Leachate ... 6-9

6.4.2 Disposal Site Without Existing Leachate. 6-10

6.5 Considerations Relating To Process Train Formulation ..... 6-12

6.5.1 Biological Treatment ..... 6-12

6.5.2 Carbon Adsorption ..... 6-16

6.5.3 Chemical Precipitation/Coagulation ..... 6-17

6.5.4 Density Separation ..... 6-18

6.5.5 Filtration ..... 6-18

6.5.6 Chemical Oxidation ..... 6-18

6.5.7 Chemical Reduction ..... 6-19

6.5.8 Ion Exchange ..... 6-19

6.5.9 Membrane Processes ..... 6-20

6.5.10 Stripping Processes ..... 6-20

6.5.11 Wet Oxidation ..... 6-20

6.6 Process Train Alternatives ..... 6-20

6.6.1 Leachate Containing Organic Contaminants 6-21

6.6.1.1 Love Canal Experience ..... 6-21

6.6.1.2 Ott/Story Site Study ..... 6-26

6.6.1.3 Other Possibilities ..... 6-31

6.6.2 Leachate Containing Inorganic Contaminants ..... 6-33

6.6.3 Leachate Containing Organic and Inorganic Pollutants ..... 6-39

6.7 References ..... 6-42

7. MONITORING ..... 7-1

7.1 General Discussion ..... 7-1

7.2 Monitoring Program Design ..... 7-3

7.2.1 Parameters To Be Measured ..... 7-3

7.2.2 Analytical Considerations ..... 7-6

7.2.3 Sampling ..... 7-6

CONTENTS (continued)


7.3 Leachate Characterization ..... 7-7

7.3.1 Wastes Received ..... 7-8

7.3.2 In-situ Monitoring ..... 7-8

7.3.3 Collected Leachate ..... 7-8

7.4 Treatment Effluent Monitoring ..... 7-9

7.4.1 Sampling Locations ..... 7-9

7.4.2 Parameters ..... 7-9

7.4.3 Data Analysis ..... 7-10

7.4.4 Process Optimization ..... 7-10

7.4.5 Safety Considerations ..... 7-10

7.5 References ..... 7-11

8. OTHER IMPORTANT CONSIDERATIONS ..... 8-1

8.1 Safety ..... 8-1

8.1.1 Degree of Risk ..... 8-1

8.1.2 Restricted Entry ..... 8-1

8.1.3 Safety Rules ..... 8-2

8.1.4 Supervision ..... 8-2

8.1.5 Inspections ..... 8-3

8.1.6 First Aid and Medical Assistance ..... 8-3

8.1.7 Protective Equipment ..... 8-3

8.1.8 Ventilation ..... 8-4

8.1.9 Housekeeping ..... 8-5

8.2 Contingency Plans/Emergency Provisions ..... 8-5

8.2.1 Emergency Situations ..... 8-5

8.2.1.1 Natural Disasters ..... 8-5

8.2.1.2 Accidents ..... 8-6

8.2.2 Plan Development ..... 8-6

8.2.2.1 Organizational Responsibilities 8-6

8.2.2.2 Plan Components ..... 8-6

8.2.3 Fire Protection ..... 8-9

8.2.3.1 In-Plant Measures ..... 8-9

8.2.3.2 Training ..... 8-10

8.2.3.3 Hazards Identification ..... 8-10

8.3 Equipment Redundancies/Backup ..... 8-11

CONTENTS (continued)

8.3.1 General Discussion ..... 8-11

8.3.2 Equipment ..... 8-12

8.3.2.1 Control Systems ..... 8-12
8.3.2.2 Tanks and Containers ..... 8-12
8.3.2.3 Pipes and Transfer Lines ..... 8-12
8.3.2.4 Valves ..... 8-12
8.3.2.5 Pumps ..... 8-12
8.3.2.6 In-Plant Drainage ..... 8-13
8.3.2.7 Electrical Filters ..... 8-13

8.4 Permits ..... 8-13

8.4.1 Consolidated Permit Regulations ..... 8-13

8.4.2 Other Permits ..... 8-14

8.5 Personnel Training ..... 8-14

8.6 Surface Runoff ..... 8-15

8.7 References ..... 8-19

Appendices

A. Summary of Reported Water Contamination Problems ... A-1

B. Alphabetical Listing of RCRA Pollutants ..... B-1

C. Unit Process Summaries - Sanitary Landfill Leachate Treatment ..... C-1

D. Unit Process Summaries - Industrial Wastewater Treatment ..... D-1

E. Treatability of Leachate Constituents ..... E-1

FIGURES


| Number | | Page |
|---|---|---|
| 3-1 | Waste stream categorization matrix | 3-19 |
| 4-1 | Waste management options - effect on leachate generation | 4-2 |
| 6-1 | Methodology to select leachate treatment process | 6-8 |
| 6-2 | Love Canal Permanent Treatment System schematic flow diagram | 6-22 |
| 6-3 | Schematic of carbon sorption/biological process train | 6-32 |
| 6-4 | Schematic of biological/carbon sorption process train | 6-34 |
| 6-5 | Process train for leachate containing metals | 6-36 |
| 6-6 | Process train for leachate containing metals including hexavalent chromium | 6-37 |
| 6-7 | Process train for leachate containing metals including hexavalent chromium and cyanide | 6-38 |
| 6-8 | Process train for leachate containing metals and ammonia and requiring TDS control | 6-40 |
| 6-9 | Schematic of biophysical process train | 6-43 |

TABLES


| Number | | Page |
|---|---|---|
| 3-1 | Summary List of Contaminants Reported | 3-4 |
| 3-2 | List of Conventional Pollutant Concentrations Reported at Six Sites | 3-16 |
| 3-3 | Characterization of Harzardous Leachate and Groundwater From 43 Landfill Sites | 3-17 |
| 4-1 | Stabilization/Fixation Techniques | 4-6 |
| 5-1 | Treatment Process Applicability Matrix | 5-16 |
| 5-2 | Leachate Treatment Process By-Produce Streams | 5-19 |
| 5-3 | Residue Management Alternatives | 5-29 |
| 6-1 | Performance Data on Temporary Treatment System at Love Canal | 6-24 |
| 6-2 | Ott/Story Groundwater Characterization | 6-27 |
| 8-1 | Suggested Guide for an Operation and Maintenance Manual for Waste Treatment Facilities | 8-16 |

ACKNOWLEDGMENTS

The authors wish to thank Mr. Stephen James, Mr. Dirk Brunner, and Ms. Wendy Davis-Hoover of the U.S.-EPA MERL and Mr. Les Otte of the U.S.-EPA Office of Solid Waste for their able advice and assistance which facilitated assembly and review of this document.

A critical review of the manuscript provided by Dr. Gary F. Bennett of the University of Toledo was especially helpful.

Review comments by Mr. B.W. Mercer of Battelle-Northwest also are gratefully acknowledged.

Special thanks go to Mrs. Ellen M. Stempkowski who was responsible for typing and overseeing assembly of much of this document.

Data contained in Appendices C and D were contributed by Monsanto Research Corporation (MRC). An unpublished draft document on leachate management prepared by MRC was consulted prior to preparation of this document.

# SECTION 1

# INTRODUCTION

Leachate generated by water percolating through a hazardous waste disposal site could contain significant concentrations of toxic chemicals. Proper leachate management is essential to avoidance of contamination of surrounding soil, groundwaters, and surface waters. Consequently, this document has been prepared to provide guidance on available management options for controlling, treating and disposing of hazardous waste leachates.

Leachate management options include all of the decision factors throughout the entire hazardous waste management process which have an impact on the nature or generation potential of leachate. Thus, consideration of leachate management options could begin with the manufacturing process and extend through the hazardous waste management chain to leachate treatment/disposal. This management chain can be divided into four major areas: (1) waste generation, (2) hazardous waste treatment prior to disposal, (3) disposal site management, and (4) leachate treatment/disposal. Because companion permit manuals and technical resource documents address many of these aspects in detail, the central focus of this document is on leachate management subsequent to leachate generation. When other aspects of leachate management are mentioned, the reader is referred to an appropriate source for details.

Hazardous waste leachate management is an area where little past experience exists. Therefore, in preparing this document, it has been necessary to draw heavily upon experience in related areas. Certain pitfalls are inherent in such an approach and thus, an effort has been made to alert the reader to areas of uncertainty throughout this document.

A major factor that must be taken into consideration in structuring the leachate management process is the need for post-closure operation. Closure of the hazardous waste disposal site probably will not mean terminating leachate management operations. Rather, leachate collection and disposal concerns will continue subsequent to site closure. This could necessitate long-term post-closure operation and financial commitments. Site closure also could influence leachate composition and quantity and, thus, treatment facility performance. Consequently,

site closure ramifications merit considerable attention early and throughout the process of managing leachate.

It is recognized that some users may not wish to read this document in its entirety. Therefore, to the extent possible, sections have been prepared to be self-standing. Nevertheless, there is a necessary interrelationship among sections and a logical progression as information from early sections is built upon in later ones. An effort has been made to cross-reference pertinent information.

There are seven subsequent sections of this document. Each of these is listed below together with a brief description of the contents of the section.

Section 2, Overview of Leachate Generation - This section briefly describes factors that influence leachate generation with the emphasis placed upon factors affecting leachate composition. It may be of interest to those wishing to predict future leachate composition at new sites.

Section 3, Leachate Characteristics - This section examines hazardous waste leachate characteristics. Available data on leachates, and contaminated ground and surface waters are presented and discussed. Data presented give insight into leachate characteristics at actual hazardous waste disposal sites, and thus provide a basis for selecting and evaluating leachate treatment technologies.

Section 4, Hazardous Waste Leachate Management Options - Four principal areas of hazardous waste leachate management options (i.e. waste generation, hazardous waste treatment, disposal site management, and leachate treatment/disposal) are identified in this section. Primary emphasis was placed upon the leachate treatment/disposal area wherein leachate is processed to render it acceptable for discharge or ultimate disposal.

Section 5, Leachate Treatment Technologies - This section provides treatability data on compounds identified at actual waste disposal sites. An initial assessment of the potential applicability of twenty unit treatment processes to leachate treatment also is made. Consideration is given to treatment process by-products, and to capital and operating costs for selected technologies. Information in this section can be used to combine individual unit processes to form a treatment system appropriate for the type of leachate encountered.

Section 6, Leachate Treatment Process Selection - This section provides an understanding of factors which influence treatment process selection. These factors are enumerated

and an approach is suggested for systematically addressing each. Finally, selected hypothetical and actual leachate situations are used as examples for applying the approach to selection of appropriate treatment processes.

Section 7, Monitoring - This section points out those considerations which are important in the design of monitoring program to support hazardous waste leachate management efforts.

Section 8, Other Important Considerations - Subjects addressed in this section are safety, contingency plans/emergency provisions, equipment redundancy/backup, permits, and surface runoff. Some of the topics are discussed in general terms, while others apply directly to leachate treatment facilities. The intent is to identify considerations which are necessary for the safe and effective treatment of hazardous waste leachate.

This manual is not designed to be a prescriptive "cook book". Sufficient past experience simply is not available to permit such an approach. Thus, the reader is challenged to use the extensive information presented herein in a manner requiring considerable technical judgment. This is necessary because of the complexity of leachates likely to be encountered, and the fact that compositions vary widely from site to site, and in some cases, within given sites. On the other hand, the manual does attempt to provide a logical thought process for arriving at the most reasonable treatment process train for any leachate likely to be generated. Furthermore, sufficient factual information is provided so that the user can readily identify a few potential treatment alternatives. Having identified such alternatives, the user then is given sufficient guidance so that final choices can be made.

# SECTION 2

# OVERVIEW OF LEACHATE GENERATION

## 2.1 GENERAL DISCUSSION

As discussed in subsequent sections, leachate management is highly dependent upon leachate characteristics. Leachate characteristics, in turn, are dependent upon how the leachate is generated. Because hazardous waste management under RCRA regulations is in its early stages, there is a dearth of information on leachate generation.

Ideally, leachate treatment alternatives should be evaluated using actual leachate in treatability and pilot plant studies. However, at the time of permitting new sites leachate is unavailable. Methods to select appropriate treatment technologies in the absence of actual leachate for treatability studies are described in Section 6.4. The methods described in this section envision projecting leachate compositions using data on the wastes expected to be disposed of, extrapolations from analogous disposal experience, and from theoretical principles. While a complete discussion of leachate generation from a theoretical point of view is beyond the scope of this manual, this section describes factors that influence leachate generation in general terms.

Emphasis in this section is placed upon factors affecting leachate quality. A detailed description of methodologies for estimating leachate volume is provided in a companion document in this EPA hazardous waste series, "Hydrologic Simulation on Solid Waste Disposal Sites", SW-868. Although intended to describe leachate for municipal landfills, a report by Phelps (1) discussed theoretical aspects of the change of mass in fluid and solid phases with respect to time. Phelps provided leaching curves (concentration vs. time) to describe the effects of four parameters on leachate concentrations: (1) ratio of column depth to infiltration rate, (2) mass transfer rate constant, (3) equilibrium constant, and (4) the initial amount of leachable material per unit volume of column. Manual users are referred to this reference for a detailed discussion of the theoretical principles of leachate generation, albeit for a municipal landfill.

Freeze and Cherry (2) discussed leachate generated from

land disposal of solid wastes, sewage disposal on land, agricultural activities, petroleum leakage and spills, and radioactive waste disposal. This reference also could be helpful in estimating leachate compositions.

The remainder of this section is an enumeration of factors which could be important in assessing leachate generation. For details, the reader is again referred to the works by Phelps (1) and Freeze and Cherry (2).

## 2.2 FACTORS AFFECTING LEACHATE GENERATION AND CHARACTERISTICS

Leachate will be generated as a result of the movement of liquids by gravity through a disposal site. Similarly, leachate will be generated as liquid contained within a disposal impoundment moves through soil beneath the disposal area. Leachate quality is dependent upon numerous factors. It is not the intent to deal with such factors in detail here; rather the reader is given a brief overview for purposes of identifying considerations which should be explored at length elsewhere.

### 2.2.1 Physical Influences

#### 2.2.1.1 Liquid Characteristics--

Liquid moving through the site can be comprised of precipitation falling upon the site, groundwater migrating through the site, and the liquid fraction of disposed materials. The quantity of liquid will be a major determinant of the rate at which the leachate will be generated as well as the leachate composition. Liquid movement can be complicated by variations in density, viscosity, and miscibility. It is possible that the liquid could be multi-phased, e.g., water, oil, and solvents with the various phases moving through the solid medium at different rates.

#### 2.2.1.2 Solid Characteristics--

For landfills, solid waste materials could comprise a significant fraction of the medium through which the liquid passes. Thus, it should not be assumed that soil alone is the solid medium. Furthermore, it is unlikely that the solid wastes or soil are homogeneous. Because of the expected solid mixture, porosity and particle sizes are expected to be variable. This will have an influence on liquid velocity and the time in which the liquid is in contact with the solid.

Initially, liquid percolating through a landfill will be absorbed by the solid material. When the absorptive (moisture-holding) capacity is reached, i.e., when the solid is saturated, then leachate quality is likely to be influenced by surface leaching. After saturation, the length of the solid column will be the major determinant of the time required for the liquid to reach the leachate collection system.

2.2.1.3 Physical Transformations--

The principal physical transformation expected in the leaching process is plugging of pore spaces and the resultant influence on chemical processes and leachate flow rates. If the disposed wastes contain significant amounts of suspended solids, then the in-place material will act as a filtering medium, and percolation flow rates will decrease as the pore spaces become clogged.

## 2.2.2 Chemical Influences

2.2.2.1 Solubility--

Solubility is one of the most important factors which influence leachate quality. Solubility is a function of the chemical composition of the liquid phase, surface area contact between the liquid phase and the solid medium, contact time, pH, temperature, and chemical composition of solid material. Chemical composition of the leachate determines dissolution and reaction rates. For example, if the liquid phase approaches the solubility product for certain compounds, then further leaching will be limited and transfer rates from the solid to the liquid will be low. Conversely, if the liquid phase is dilute, dissolution of the solid medium will be more rapid. If the solubility product is exceeded, then chemical precipitation could occur.

Size of solid particles has a direct influence upon leaching. Smaller particles result in larger surface areas thus permitting increased contact and corresponding increased leaching by the liquid. Physical degradation due to aging and erosion processes, which break solids into smaller pieces, increases exposed surface area. In general, dissolution is directly proportional to the surface contact area.

Porosity, defined as the volume of void spaces within a solid matrix divided by the total unit volume, influences the flow rate of liquid through the solid and thus, the contact time between the liquid and solids. As contact time increases (where there is lower porosity), dissolution increases up to the maximum soluble concentration of the constituents in the liquid. Thus, longer contact times permit more complete chemical reactions between the liquid and solid, until eventually an equilibrium concentration is reached.

pH is considered a significant variable affecting leachate composition because of its effect on solubility and chemical reactions occurring in the disposal site. In general, pH affects solubility in two principal ways:

(1) alteration of simple solution equilibria, and

(2) direct participation in redox reactions.

pH generally is a function of the type of waste disposed. Low-molecular weight acids and carbon dioxide which result from an aerobic digestion of organic material reduce the pH. Hazardous wastes can contribute to pH change due to their own specific characteristics or by the dissolution of waste materials into leaching water. Changes in pH can influence the solubility of the waste materials. For example, heavy metals, are solubilized in acidic solution. Normally, the solubility product for metals is lowest in mildly basic solution. Thus, acidic conditions promote the leachability of metal ions, and markedly increase the potential for appearance in the leachate collection system.

Soil admixtures also can influence solubility. Acid or alkaline soils can influence solubility either positively or negatively. For example, acid soils tend to promote solubilization of waste constituents, whereas higher pH in alkaline soils likely will retard solubilization.

A disposal site has some capacity to tolerate acids or bases before the pH of the system is markedly affected. If this buffer capacity is high, the leachate composition is more stable and predictable. Correspondingly, a low buffering capacity makes the leachate composition more difficult to predict.

Temperature changes within the disposal site can occur due to the temperature of materials added, redistribution of heat by intruding extraneous water, and heat generated by waste decomposition (biological and physical/chemical activity). Temperature is important because it influences reaction rates between the liquid and solid medium. Moreover, it exerts an influence biologically on microbial catalysis. Both solubility rates and microbial activity increase as temperatures rise. Hence, during warm months, leachate may contain higher concentrations of contaminants.

2.2.2.2 Chemical Transformations--

Chemical transformations occurring within the disposal site could include adsorption, oxidation and reduction, and precipitation. Most soils are known to have cation exchange capacity. This capacity is variable dependent upon the type of soils. To a lesser extent, some soils are known to sorb anions. While this may be an important influence during initial stages of disposal operations, it is expected that exchange capacity will be exhausted at about the time the solid medium is saturated by the liquid. Thereafter, exchange capacity will be at equilibrium and will not be a consequential determinant of leachate composition.

Redox potential can influence chemical and biological reactions. In disposal sites dissolved oxygen concentrations will decrease with depth. Thus, chemical constituents will be oxidized in the upper zones where there is sufficient dissolved

oxygen present, whereas reducing conditions may be expected in the lower depths. Correspondingly, aerobic biological activity will prevail in the upper zones giving way to anaerobic reactions as dissolved oxygen is depleted with depth.

Chemical reactions could occur in the disposal site depending upon the types of materials disposed. For example, neutralization reactions could be evident, and metals could precipitate in alkaline solution.

### 2.2.3 Biological Influences

Microorganisms solubilize and oxidize organic waste constituents. Microbes not lethally affected by the waste product may decompose both the toxic and nontoxic organic compounds into organics that can be metabolized further.

The microbial population within the disposal site depends upon waste composition, nutrients available, concentration of toxic material, oxygen levels, temperature, pH, percent moisture, and the initial population found in the waste liquid or solids and any admixes such as soil. Aerobic microorganisms will give way to anaerobic species as oxygen is depleted. Anaerobic microorganisms which then predominate may generate significant amounts of gases such as methane, hydrogen sulfide, and ammonia that can cause both odor problems and potential explosion hazards.

Biological activity may change substantially over time and may become more significant as a disposal site ages. Biological processes could act to reduce the levels of organic compounds which appear in leachate. This could impact the nature and duration of necessary post-closure leachate management measures.

## 2.3 REFERENCES

1. Phelps, D. Solid Waste Leaching Model, Draft Report. University of British Columbia, Department of Civil Engineering, Vancouver, Canada. p. 1-25.

2. Freeze, R.A., and J.A. Cherry. Groundwater. Prentice Hall. Englewood Cliffs, New Jersey, 1979, 604 pp.

# SECTION 3

# LEACHATE CHARACTERISTICS

## 3.1 GENERAL DISCUSSION

In the previous section, factors which affect leachate generation were described. This section takes the next step and attempts to relate hazardous waste leachate generation with the expected pollutant characteristics of such leachate. For purposes of this manual, leachate is regarded as the liquid which drains from the aqueous portion of disposed materials to the leachate collection system.

Presumably, safeguards will be engineered into the disposal operation which minimize dilution of the leachate due to percolation of precipitation, or runoff, or flow through of extraneous water sources such as groundwater. Moreover, the collection system will intercept the leachate before migration from the site and dilution can occur. Thus, the leachate is envisioned as a concentrated solution of chemicals representative of soluble or leachable materials contained in the disposal site. Another possible type of leachate is that from existing hazardous waste disposal sites which may have been constructed prior to implementation of RCRA regulations, and presently require upgrading and retrofitting. Leachate from such landfills might be more dilute because of infiltration of extraneous water. Contaminated surface water which has contacted hazardous waste is expected to be even more dilute.

The intent of this section is to examine leachate characteristics from new and existing secured landfills and surface impoundments which accept hazardous materials for disposal. This is a difficult task because little data are available on existing facilities. Consequently, it was decided to secure whatever existing data were available on leachates, and contaminated ground and surface water problems associated with hazardous waste disposal operations. The belief is that current data will provide information on compounds disposed in the past and to some extent on migration of these compounds. However, the concentrations found probably will be lower than for newly permitted facilities because future efforts will be made to exclude the extraneous dilution water.

Notable deficiencies in the existing data base include:

- Very little data on actual hazardous waste leachate exist. Most available leachate composition data pertain to sanitary landfills.

- Reported information is such that it often is difficult to distinguish between leachate and contaminated groundwater, wherein some dilution has occurred.

- Most available composition data on contamination associated with hazardous waste disposal sites pertains to surrounding ground and surface wastes.

- Composition is highly variable from site to site, at different sampling locations within a given site, and at a given location over a period of time. (Factors that contribute to variability were addressed in Section 2.)

- Analytical testing is difficult and very costly in a complex hazardous aqueous waste pollution matrix. These factors serve to limit the data base. In addition, analytical errors and interferences also may contribute to some of the variability.

- Because of the analytical complexity and expense, "complete" characterizations are nonexistent.

- Comparison of leachates is hindered because no definitive listing of chemicals disposed could be developed on a site-by-site basis.

- There is a general lack of information regarding the physical characteristics of each site.

Thus, the existing data base is characterized primarily by its incompleteness and variability.

Despite the above cited deficiencies, available information does give insight into leachate characteristics at actual hazardous waste disposal sites. Moreover, the available information can be used to provide guidance on the selection and evaluation of leachate treatment technologies.

Rather than attempt to formulate "typical" leachate compositions, this section focuses on providing and summarizing available characterization data on leachates, and contaminated ground and surface waters associated with existing hazardous waste disposal sites. The latter categories were included because they represent the preponderance of the data base and because they provide information on the types of compounds which have been associated with previous disposal operations.

In summary, while it is not possible to characterize

leachates precisely, sufficient information does exist to permit definition of a range of management alternatives for leachates at secured landfill sites.

## 3.2 LEACHATE CHARACTERISTICS AT ACTUAL SITES

Because concern for proper management of hazardous wastes has intensified only recently, published leachate data most frequently describe sanitary landfill leachate rather than hazardous waste leachate. Data from sanitary landfills was not used in this manual. Rather, this manual relies heavily on a recent report (1) which contains published and unpublished data on ongoing hazardous waste disposal site studies. Much of the data contained in that report was obtained in conjunction with recent efforts to determine the magnitude of the national hazardous waste disposal problem. Most often the data reflected contamination of surface and groundwater resources by migrating leachate rather than representing the characteristics of concentrated leachate. It is believed that this type of data, while not fully elucidating leachate composition for treatability purposes, does provide insight into the types of compounds which actually have been identified in association with hazardous waste disposal operations.

Characterization data on leachates, and contaminated ground and surface waters in the proximity of 30 sites containing hazardous wastes was compiled. Because of the large amount of data, this information is presented in Appendix A. There is a wide variation from site to site in the detail and completeness of the data contained in Appendix A since relatively few sites have been well characterized. Nevertheless, this data compilation represents the best information available at this time.

A summary of the data contained in Appendix A is presented in Table 3-1 which lists specific pollutants identified at the 30 sites, the range of concentrations reported, and the frequency with which the pollutants were found. Chemical contaminants are listed in alphabetical order with an indication of the pollutant grouping and chemical classification of each compound.

Users of this manual should note that data in Appendix A and Table 3-1 include more contaminants than those dealt with by RCRA concerns. Leachate treatment processes must deal with a broader spectrum of compounds than those listed in RCRA as acutely hazardous, hazardous, or toxic. That is, treatment processes must be designed to deal with hazardous constituents in the matrix in which they occur. Moreover, it is likely that effluent from a leachate treatment process will have to meet requirements in addition to RCRA regulations (e.g., NPDES, pretreatment).

TABLE 3-1 SUMMARY LIST OF CONTAMINANTS REPORTED

| Contaminant | Pollutant Group* | Contaminant Classification** | Concentration Range Reported*** | No. of Sites Reported |
|---|---|---|---|---|
| Acetone | T | 2 | <0.1-62,000 | 3 |
| m-acetonylanisol[α] | | 4 | <3-1357 | 1 |
| Ag | H, P | 7 | 1-10 | 2 |
| Al | | 7 | 124 | 1 |
| Aldrin | A, H, P, S | 10 | <2-<10 | 2 |
| Alkalinity, as $CaCO_3$ | | 8 | 20.6-5400 mg/l | 3 |
| Aniline | S, T | 4 | <6.2-1900 | 2 |
| Aroclor 1016/1242 | H, P, S | 9 | 110-1900 | 1 |
| Aroclor 1016/1242/1254 | H, P, S | 9 | 66 mg/l-1.8 g/l | 1 |
| Aroclor 1242/1254/1260 | H, P, S | 9 | 0.56-7.7 | 1 |
| Aroclor 1254 | H, P, S | 9 | 70 | 1 |
| As | H, P | 7 | 0.011-<10,000 mg/l | 6 |
| Ba | H | 7 | 0.1-2,000 mg/l | 5 |
| Be | H, P | 7 | 7 | 1 |
| Benzaldehyde | | 4 | P-3,100 mg/l | 2 |
| Benzene | H, P, S, T | 4 | <1.1-7370 | 5 |
| Benzene hexachloride | | 4 | P | 1 |
| Benzene methanol | | 1 | 4,600 mg/l | 1 |
| Benzoic acid | S | 4 | <3-12,311 | 1 |
| Benzylamine or o-toluidine | | 3 | <10-471 | 1 |
| Biphenyl napthalene | | 13 | P | 1 |
| Bis (2ethylhexyl) phthalate | H, P, T | 12 | 53 mg/l | 1 |
| Bis (pentafluorophenyl) phenylphosphine | | 2 | <38 | 1 |
| B | | 7 | 624 | 1 |
| $BOD_5$ | C | 8 | 42-10,900 mg/l | 3 |
| Bromodichloromethane | P | 6 | ND-35 | 1 |
| 2-Butanol | | 1 | 550 mg/l | 1 |

(continued)

TABLE 3-1 (continued)

| Contaminant | Pollutant Group* | Contaminant Classification** | Concentration Range Reported*** | No. of Sites Reported |
|---|---|---|---|---|
| 2-Butoxyethanol | | 2 | <2,168 | 1 |
| (1-Butylheptyl) benzene | | 4 | <36 | 1 |
| (1-Butylhexyl) benzene | | 4 | <36 | 1 |
| (1-Butyloctyl) benzene | | 4 | <36 | 1 |
| o-sec-butylphenol[α] | | 11 | <3-83 | 1 |
| p-sec-butylphenol[α] | | 11 | <3-48 | 1 |
| p-2-oxo-n-butylphenol | | 11 | <3-1546 | 1 |
| $C_4$ alkylcyclopentadiene | | 6 | P | 1 |
| $C_5$ substituted cyclopentadiene | | 6 | P | 1 |
| Ca | | 7 | 164-2500 mg/l | 4 |
| Camphene | | 4 | P | 1 |
| Camphor | | 4 | <10-7571 | 1 |
| Carbofuran | S | 10 | P | 1 |
| Cd | H, P | 7 | 5-8200 | 6 |
| Chloraniline | | 4 | <10-86 | 1 |
| o-chloraniline | A, H | 4 | ND-12,000 | 2 |
| Chlorobenzaldehyde | | 4 | P | 1 |
| Chlorobenzene | H, P, S, T | 4 | 4.6-4620 | 5 |
| Chlorobenzyl alcohol | | 1 | P | 1 |
| Chloroform | H, P, S, T | 6 | 0.02-4550 | 4 |
| 1-chloro-3-nitrobenzene | | 4 | <8-340 | 1 |
| 4-chloro-3-nitrobenzamide | | 4 | 440-8700 | 1 |
| p-chloronitrobenzene | | 4 | 460-940 | 1 |
| Chloronitrotoluene | | 4 | ND-460 | 1 |
| 2-chloro-n-phenylbenzamide | | 4 | <38 | 1 |
| 2-chlorophenol | H, P, T | 11 | <3-48 | 1 |
| p-chlorophenyl methyl sulfide | | 4 | <10-68 | 1 |

(continued)

TABLE 3-1 (continued)

| Contaminant | Pollutant Group* | Contaminant Classification** | Concentration Range Reported*** | No. of Sites Reported |
|---|---|---|---|---|
| p-chlorophenylmethyl sulfone | | 4 | <10-40 | 1 |
| p-chlorophenyl methyl sulfoxide | | 4 | <10-53 | 1 |
| Cl | S | 8 | 3.65-9920 mg/l | 6 |
| CN | A, H | 8 | 0.5-14,000 | 2 |
| Co | | 7 | 10-220 | 1 |
| COD | C | 8 | 24.6-41,400 mg/l | 6 |
| Color | | 8 | 50-4,000 color units | 1 |
| Cyclohexane | S, T | 2 | <0.4-22.0 | 1 |
| Cr | H, P | 7 | 1-208,000 | 7 |
| Cu | P | 7 | 1-16,000 | 9 |
| DDT | H, S, T | 10 | 4.28-14.26 | 1 |
| Dibromochloromethane | P, T | 6 | 3.9 | 1 |
| Dibutyl phthalate | H, P, T | 12 | 21.732 mg/l | 1 |
| 2-6-dichlorobenzamide | | 4 | 890-30,000 | 1 |
| Dichlorobenzene | H, P, S | 4 | <10-517 | 2 |
| 4, 4'-Dichlorobenzophenone | | 4 | <38 | 1 |
| 3, 3'-dichloro [1, -1'-Diphenyl]-4, 4'-diamine | | 3 | <84-1600 | 1 |
| 1, 1-dichloroethane | H, P, T | 6 | <5-14,280 | 2 |
| 1, 2-dichloroethane | H, P, S, T | 6 | 2.1-4500 | 5 |
| trans-1, 2-dichloroethane | H, P | 6 | 25-8150 | 2 |
| Dichloroethylene | H, P, S | 6 | 10,000 | 1 |
| 1, 1-dichloroethylene | H, P, S, T | 6 | 28-19,850 | 5 |
| 1, 2-dichloroethylene | H, P | 6 | 0.2 | 1 |
| Dichloromethane | H, P, S, T | 6 | 3.1-6570 | 4 |
| 1, 2-Dichloropropane | H, S | 6 | <22 | 1 |
| Dichloropropene | H, P, S | 6 | P | 1 |

(continued)

TABLE 3-1 (continued)

| Contaminant | Pollutant Group* | Contaminant Classification** | Concentration Range Reported*** | No. of Sites Reported |
|---|---|---|---|---|
| Dicyclopentadiene | | 2 | 80-1200 | 1 |
| Dieldrin | A, H, P, S | 10 | <2-4.5 | 1 |
| 1, 2-Diethylbenzene | | 4 | 7971 | 1 |
| Diisopropyl methylphosphonate | | 2 | 400-3600 | 1 |
| Dimethyl aniline | | 4 | <10-6940 | 1 |
| Dimethyl ether | | 5 | 10-100 mg/l | 1 |
| 1, 4-Dimethyl-2-(1-methyl-ethyl) benzene | | 4 | 11,913 | 1 |
| 1, 2-Dimethyl naphthalene | | 13 | <1,453 | 1 |
| Dimethyl pentene | | 2 | 10-100 mg/l | 1 |
| 2, 3-Dimethyl-2-pentene | | 2 | <8.6 | 1 |
| Dimethylphenol | S | 11 | <3 | 1 |
| 2, 4-Dinitrophenol | H, P, S, T | 11 | 10-99 | 2 |
| Diphenyldiazine | | 4 | <36 | 1 |
| Dipropyl phthalate | | 12 | <3883 | 1 |
| Endrin | A, P, S | 10 | <2-9 | 1 |
| Ethanol | | 1 | 56,400 | 1 |
| 2-Ethoxyethanol[α] | | 1 | 3,300 | 1 |
| 1-Ethoxypropane | | 2 | 87,000 | 1 |
| m-ethylaniline | | 4 | <10-7640 | 1 |
| Ethyl benzene | P, S | 4 | 3.0-10,115 | 4 |
| (1-Ethyldecyl) benzene | | 4 | <36 | 1 |
| 1-ethyl-2, 4-dimethyl benzene | | 4 | <1453.0 | 1 |
| 2-ethyl-1, 4-dimethyl benzene | | 4 | <1453.0 | 1 |
| 2-ethyl-1, 3-dimethyl benzene | | 4 | <1453.0 | 1 |
| 1-ethyl-3, 5-dimethyl benzene | | 4 | 12,507.0 | 1 |
| 4-ethyl-1, 2-dimethyl benzene | | 4 | <1453.0 | 1 |
| 1-ethyl-2-isopropyl benzene | | 4 | <1453.0 | 1 |

(continued)

TABLE 3-1 (continued)

| Contaminant | Contaminant Pollutant Group* | Concentration Classification*** | Range Reported** | No. of Sites Reported |
|---|---|---|---|---|
| 2-ethylhexanol | | 1 | ND-23,000 | 2 |
| 2-ethyl-4-methyl-1-pentanol | | 1 | 22,168.0 | 1 |
| (1-Ethylnonyl) benzene | | 4 | <36 | 1 |
| (1-Ethyloctyl) benzene | | 4 | <36 | 1 |
| 1-ethylpropylphenol[α] | | 11 | <3.0 | 1 |
| 1-ethyl-2, 4, 5-trimethyl benzene | | 4 | <1453.0 | 1 |
| 5-ethyl-1, 2, 4-trimethyl benzene | | 4 | <1453.0 | 1 |
| F | A, H | 7 | 140-1300 | 1 |
| Fe | | 7 | 90-678,000 | 6 |
| Halogenated Organics | | 8 | 2-15,900 | 1 |
| Hardness, as $CaCo_3$ | | 8 | 700-4650 mg/l | 2 |
| Heavy Organics | | 8 | 0.01-0.59 mg/l | 1 |
| Heptachlor | A, H, P, S | 10 | 573 | 1 |
| 3-heptanone | | 2 | ND-1300 | 1 |
| 1-Heptyl-1, 2, 3, 4-tetra-hydro-4-methyl-naphthalene | | 12 | <36 | 1 |
| Hexachlorobenzene | H, P, T | 4 | 32-<100 | 1 |
| Hexachlorobutadiene | H, P, T | 6 | <20-109 | 2 |
| Hexachlorocyclohexane: | H, P, T | | | |
| alpha isomer | H, P, T | 2 | ND-600 | 1 |
| beta isomer | H, P, T | 2 | ND-70 | 1 |
| gamma isomer | H, P, T | 2 | ND-600 | 1 |
| delta isomer | H, P, T | 2 | ND-120 | 1 |
| Hexachlorocyclopentadiene | H, P, S, T | 6 | <100 | 1 |
| Hexane | | 2 | 10-100 mg/l | 1 |
| Hg | P | 7 | 0.5-7.0 | 7 |
| Hydrocarbons | | 8 | <36-42,760 | 2 |

(continued)

TABLE 3-1 (continued)

| Contaminant | Pollutant Group* | Contaminant Classification** | Concentration Range Reported*** | No. of Sites Reported |
|---|---|---|---|---|
| p-isobutylamisol[α] or p-acetonylanisol[α] | | 4 | <3-86 | 1 |
| Isopropanol | | 1 | <100 | 1 |
| Isoprophylphenol[α] | | 11 | 3-8 | 1 |
| K | | 7 | 6.830-961 mg/l | 3 |
| Kepone | H, S, T | 10 | 2000 | 1 |
| Light Organics | | 8 | 1.0-1000 mg/l | 1 |
| Limonene | | 4 | P | 1 |
| MBAS | | 8 | 240 | 1 |
| Methanol | T | 1 | 42,400 | 1 |
| 1-(2-Methoxy-1-methylethoxy)-2 propanol | | 1 | <2168 | 1 |
| 1-Methoxy-2-propanol | | 1 | 66,000 | 1 |
| 2-Methyl-2-butanol | | 1 | 87,000 | 1 |
| Methylcyclopentane | | 2 | <0.4-11 | 1 |
| 2-Methylcyclopentanol | | 1 | 1.7-2.168 mg/l | 2 |
| (1-Methyldecyl) benzene | | 4 | <36 | 1 |
| Methylene chloride | P | 2 | <0.3 mg/l-184 mg/l | 3 |
| Methylethyl benzene | | 4 | <1453.0 | 1 |
| Methyl ethyl ketone | H, T | 2 | 53 mg/l | 1 |
| Methyl isobutyl ketone | T | 2 | 2-10 mg/l | 2 |
| 1-Methyl-3-(1-methylethanyl)-cyclohexane | | 2 | <1453.0 | 1 |
| 1-Methyl-3-(1-methylethyl)-benzene | | 4 | <1453.0 | 1 |
| 1-Methyl-4-(1-methylethyl)-benzene | | 4 | <1453.0 | 1 |
| Methyl naphthalene | | 13 | <10-290 | 1 |

(continued)

TABLE 3-1 (continued)

| Contaminant | Pollutant Group* | Contaminant Classification** | Concentration Range Reported*** | No. of Sites Reported |
|---|---|---|---|---|
| 1-Methyl naphthalene | | 13 | <1453.0 | 1 |
| 2-Methyl naphthalene | | 13 | <1453.0 | 1 |
| (1-Methylnonyl) benzene | | 4 | <36 | 1 |
| 4-Methyl-2-pentanol | | 1 | 140 mg/l | 1 |
| 4-Methyl-2-pentanone | | 1 | 110 mg/l | 1 |
| 2-Methylphenol | | 11 | <8.0-210 | 1 |
| 1-Methyl-4-phenoxybenzene | | 4 | <8.4 to 670 | 1 |
| (2-Methyl-1-propenyl) benzene | | 4 | <1453.0 | 1 |
| (1-Methylundecyl) benzene | | 4 | <36 | 1 |
| Mg | | 7 | 25-453 mg/l | 3 |
| Mn | | 7 | 0.010-550 mg/l | 4 |
| Mo | | 7 | 100-240 | 3 |
| Na | | 7 | 4.6-1350 mg/l | 5 |
| Naphthalene | H, P, S, T | 13 | <10 mg/l-18,698 | 2 |
| Nemagon | | 10 | <1-8 | 1 |
| $NH_3$-N | | 8 | <0.010-1000 mg/l | 3 |
| $NH_4$-N | | 8 | 650 | 1 |
| Ni | H | 7 | 20-48,000 | 4 |
| nicotinic acid | A, H | 4 | P | 1 |
| o-nitroaniline | | 4 | 170-180 mg/l | 1 |
| p-nitroaniline | A, H | 4 | 32-47 mg/l | 1 |
| nitrobenzene | H, P, S, T | 4 | ND-740 | 1 |
| $NO_2$-N | | 8 | <10- 100 | 2 |
| $NO_3$-N | | 8 | 10- 100 | 3 |
| o-nitrophenol | P, S | 11 | 8600-12,000 | 1 |
| n-nitrosodiphenylamine | A, H | 3 | 190 | 1 |
| Octachlorocyclopentene | | 6 | <100 | 1 |
| Oil and grease | C | 8 | 90 mg/l | 1 |

(continued)

TABLE 3-1 (continued)

| Contaminant | Pollutant Group* | Contaminant Classification** | Concentration Range Reported*** | No. of Sites Reported |
|---|---|---|---|---|
| Paraffins | | 2 | P | 1 |
| Pb | H, P | 7 | 1-19,000 | 6 |
| Pentachlorophenol | A, H, P, S | 11 | 2400 | 1 |
| (1-Pentylheptyl) benzene | | 4 | <36 | 1 |
| Perchloroethylene | P, T | 6 | ND-8200 | 5 |
| Petroleum oil | | 13 | P | 1 |
| pH | C | 8 | ∿3-7.9 (pH scale) | 7 |
| Phenanthrene or anthracene | P | 13 | <10-670 | 1 |
| Phenol | H, P, S, T | 11 | <3-17,000 | 4 |
| Phenols | H, P, S, T | 11 | 0.008-54.17 | 1 |
| Phthalate esters | | 12 | P | 1 |
| Phthalates | P | 12 | P | 1 |
| Pinene | | 2 | P | 1 |
| $PO_4$ | | 8 | <10-2740 | 4 |
| Polynuclear aromatics | P | 13 | 3400 | 1 |
| (1-Propylheptyl) benzene | | 4 | 36 | 1 |
| (1-Propylnonyl) benzene | | 4 | 36 | 1 |
| (1-Propyloctyl) benzene | | 4 | 36 | 1 |
| Sb | H, P | 7 | 2000 | 1 |
| Se | H, P | 7 | 3-590 | 4 |
| $SO_4$ | | 8 | 1.2-505 mg/l | 4 |
| SOC | | 8 | 4200 mg/l | 1 |
| Specific Conductance ( mhos/cm) | | 8 | 80-2000 | 2 |
| SS | C | 8 | <3-1040 mg/l | 4 |
| Styrene | S | 4 | P | 1 |
| Sulfide | | 8 | <100 | 1 |
| TDS | | 8 | 1455-15,700 mg/l | 4 |
| Temperature | | 8 | 58-63° F | 1 |

(continued)

TABLE 3-1 (continued)

| Contaminant | Pollutant Group* | Contaminant Classification** | Concentration Range Reported*** | No. of Sites Reported |
|---|---|---|---|---|
| 1, 1, 2, 2-Tetrachloroethane | H, P, T | 6 | <5-1590 | 1 |
| Tetrachloroethene | H, T | 6 | <1-89,155 | 3 |
| 1, 1, 2, 2-Tetrachloroethene | H, T | 6 | 0.6-560 | 1 |
| Tetrachloromethane | H, P, S, T | 6 | <1-25,000 | 3 |
| 1, 2, 3, 5-Tetramethyl benzene | | 4 | 36,479 | 1 |
| 1, 2, 4, 5-Tetramethyl benzene | 4 | | <1,453 | 1 |
| Thiobismethane | | 2 | <1.0-290 | 1 |
| TKN | C | 8 | <1-984 mg/l | 4 |
| TOC | C | 8 | 10.9-8,700 mg/l | 8 |
| Toluene | H, P, S, T | 4 | <5-100,000 | 7 |
| Total Inorganic Carbon | | 8 | 71,000 | 1 |
| Total P | C | 8 | <100-3200 | 2 |
| Total Solids | | 8 | 159-1730 mg/l | 1 |
| Tribromomethane | H, P, T | 6 | 0.2 | 1 |
| 1, 2, 4-Trichlorobenzene | H, P | 4 | <10-28 | 2 |
| Trichloroethane | H, P, T | 4 | P-35,000 | 2 |
| 1, 1, 1-Trichloroethane | H, P, T | 4 | 1.6 μg/l-590 mg/l | 5 |
| 1, 1, 2-Trichloroethane | H, P, T | 4 | <5-870 | 2 |
| Trichloroethene | H, T | 4 | <3-84,000 | 4 |
| Trichloroethylene | H, P, S, T | 4 | <3-260,000 | 4 |
| Trichlorofluoromethane | P, T | 4 | <5-18 | 1 |
| Trichloromethane | P, S | 4 | <1- 10,000 | 1 |
| 2, 4, 5-Trichlorophenol | H, S, T | 11 | P | 1 |
| Trichlorotoluenes | | 4 | 3,300 mg/l | 1 |

(continued)

TABLE 3-1 (continued)

| Contaminant | Pollutant Group* | Contaminant Classification** | Concentration Range Reported*** | No. of Sites Reported |
|---|---|---|---|---|
| Trimethylbenzene | | 4 | P | 1 |
| 1, 2, 3-Trimethylbenzene | | 4 | 13.702 mg/l | 1 |
| 1, 2, 4-Trimethylbenzene | | 4 | 11.239 mg/l | 1 |
| 1, 3, 5-Trimethylbenzene | | 4 | 37.113 mg/l | 1 |
| Vinyl Chloride | H, P, T | 6 | 140-32,500 | 1 |
| Xylene | S, T | 4 | P-5400 | 2 |
| m-xylene | S, T | 4 | 19.708 mg/l | 1 |
| o-xylene | S, T | 4 | 1453 | |
| p-xylene | S, T | 4 | 48.170 mg/l | 1 |

ND - not detected
P - present, but not quantified
α - structure not validated by actual compound
* - Codes for Pollutant Groups

C - Conventional pollutants (per Clean Water Act and Treatability Manual, Vol. III)
P - Priority pollutants
A - RCRA list - Acute hazardous
H - RCRA list - Hazardous
T - RCRA list - Toxic
S - Section 311 compound
- (a blank indicates that the compound does not fall into one of the above groups)

(continued)

TABLE 3-1 (continued)

** Codes for Contaminant Classification

1 - Alcohol
2 - Aliphatic
3 - Amine
4 - Aromatic - nonhalogenated and halogenated aromatic compounds
5 - Ether
6 - Halocarbon-halogenated aliphatic compounds
7 - Metal
8 - Miscellaneous - including selected priority pollutants, pH, BOD, TOC, COD, chloride, sulfate, phosphate, and other parameters generally used to characterize wastewaters.
9 - PCB
10 - Pesticide
11 - Phenol - including chloro- and nitro- phenols
12 - Phthalate
13 - Polynuclear Aromatic

*** Concentrations in μg/l unless otherwise noted

To the extent possible, Table 3-1 identifies pollutant types as defined by: the Federal Water Pollution Control Act Amendments of 1972 (FWPCA), the Clean Water Act of 1977(CWA), the Resource Conservation and Recovery Act of 1976 (RCRA), and the Treatability Manual (2). Specifically, the pollutant groups used are:

- conventional pollutants*
- priority pollutants
- Section 311 compounds
- RCRA list of acutely hazardous compounds [261.33 (e)]
- RCRA list of hazardous compounds (Appendix VIII)
- RCRA list of toxic compounds [261.33 (f)]

In order to more easily identify RCRA compounds, the manual user is referred to Appendix B. The appendix contains an alphabetical listing of the three categories of RCRA pollutants contained in Subpart D of the Hazardous Waste and Consolidated Permit Regulations (3), i.e., acutely hazardous, hazardous, and toxic.

Table 3-1 serves several useful purposes:

- It provides a quick reference of the various compounds identified at problem sites in alphabetical order.
- It defines the pollutant group into which the compound falls.
- It classifies the compounds according to twelve chemical classes similar to those used for priority pollutants.
- It specifies the ranges of concentratons encountered at actual hazardous waste disposal sites.
- It indicates frequency of occurrence at actual waste sites previously investigated.
- It places the data in a framework useful for development

*conventional pollutants as used in the Treatability Manual include $BOD_5$, COD, TOC, TSS, oil and grease, total phenol, total phosphorus, TKN, and total organic chlorine. This differs from the CWA (Section 301) list of $BOD_5$, TSS, fecal coliform, oil and grease, and pH.

of treatment alternatives.

Conventional pollutant concentration data for six of the sites (5, 6, 10, 11, 22, and 23) listed in Appendix A are given in Table 3-2. Data on most of the pollutants listed in Table 3-2 were available for only six sites. Isolated conventional pollutant values from other sites were not included.

The conventional pollutant parameters listed in Table 3-2 are important because they usually have a significant influence on the treatment process to be selected. The range, median and arithmatic mean values contained in Table 3-2 provide insight into the character of these wastes with respect to how they may be treated. Although the data are limited, three to five values can be useful to form at least a preliminary concept.

TABLE 3-2. LIST OF CONVENTIONAL POLLUTANT CONCENTRATIONS REPORTED AT SIX SITES

| Pollutant | Range | Median Value | Arithmetic Mean | Number of Values(1) |
|---|---|---|---|---|
| BOD | 42 - 10,900 | 2,000 | 4,380 | 3 |
| COD | 24.6 - 18,600 | 7,100 | 7,794 | 5 |
| TOC | 10.9 - 4,300 | 1,160 | 1,350 | 4 |
| Alkalinity | 20.6 - 5,400 | 228(2) | 1,950 | 3 |
| pH | 6.3 - 7.9 | 6.9 | 6.9 | 4 |
| TDS | 320(3) - 15,700 | 1,830 | 6,460 | 5 |
| SS | <3 - 1,000 | 163 | 342 | 4 |
| $NH_3$-N | <0.01 - 1,000 | 130 | 377 | 3 |
| TKN | 0.65 - 984 | 5.5 | 248 | 4 |
| $NO_3$-N | <0.012 - <0.1 | 0.025 | <0.05 | 3 |
| $PO_4$-P | <0.01 - <0.1 | 0.04 | <0.05 | 3 |

(1)Average values from specific sites.
(2)Estimated from inorganic carbon and pH.
(3)Estimated from conductivity (640 mmhos x 0.5).

A survey of ground and surface water quality in the vicinity of 43 industrial waste disposal sites (landfills and impoundments) is summarized in Table 3-3. This summary is a further indication of the type of pollutants found at hazardous waste disposal sites. Note that these data, although less detailed than those shown in Appendix A, also have widely variable concentration ranges.

TABLE 3-3
CHARACTERIZATION OF HAZARDOUS LEACHATE AND GROUNDWATER FROM 43 LANDFILL SITES (1)

| Pollutant | Concentration Range (mg/l) | Typical Conc. (mg/l) | No. of Sites Where Detected |
|---|---|---|---|
| As | 0.03 - 5.8 | 0.2 | 5 |
| Ba | 0.01 - 3.8 | 0.25 | 24 |
| Cr | 0.01 - 4.20 | 0.02 | 10 |
| Co | 0.01 - 0.22 | 0.03 | 11 |
| Cu | 0.01 - 2.8 | 0.04 | 15 |
| CN | 0.005 - 14 | 0.008 | 14 |
| Pb | 0.3 - 19 | - | 3 |
| Hg | 0.0005 - 0.0008 | 0.0006 | 5 |
| Mo | 0.15 - 0.24 | - | 2 |
| Ni | 0.02 - 0.67 | 0.15 | 16 |
| Se | 0.01 - 0.59 | 0.04 | 21 |
| Zn | 0.1 - 240 | 3.0 | 9 |
| Light Organics | 1.0 - 1000 | 80 | 10 |
| Halogenated Organics | 0.002 - 15.9 | 0.005 | 5 |
| Heavy Organics | 0.01 - 0.59 | 0.1 | 8 |

Original Source of Data:

Geraghty and Miller, Inc. The Prevalence of Subsurface Migration of Hazardous Chemical Substances at Selected Industrial Waste Land Disposal Sites. EPA/530/SW-634, U.S. Environmental Protection Agency, 1977.

Even though the data base presented above has deficiencies, it does provide guidance in formulating treatment alternatives provided that data are used with caution, recognizing that leachate from secured landfills may have higher concentrations.

## 3.3 LEACHATE CATEGORIZATION

In order to extend the usefulness of the existing data

base, and to gain additional insight into the probable nature of hazardous waste leachates, a categorization system was devised to group site composition data contained in Appendix A according to the concentration of inorganic and organic constituents. In this way, treatment alternatives potentially could be visualized better. Hence, a matrix illustrated in Figure 3-1, was prepared to show the concentrations of inorganic and organic constituents in "high", "medium", and "low" ranges. In general, the working definitions of these terms are as follows:

| | Hazardous Inorganic Constituent | Hazardous Organic Constituent |
|---|---|---|
| High | greater than 5 times water quality criteria* | greater than 400 μg/l |
| Medium | from 2 to 5 times water quality criteria* | from 5 to 400 μg/l |
| Low | less than water quality criteria* | less than 5 μg/l |

In addition to the hazardous constituents, if another parameter such as BOD or TOC was reported in significant amounts (BOD >20 mg/l or TOC >10 mg/l), the waste stream was considered to fall into the high organic category. Although this system is not rigorous, it does permit a useful grouping of the actual waste streams.

Inspection of the matrix reveals that most of the actual waste streams fall into one of two categories: high organic-low inorganic or low organic-high inorganic. Fewer sites fell into categories where both inorganic and organic components were significant. Taking into account the fact that most of the data used to construct this matrix were derived from situations where migration and dilution had occurred, it is reasonable to assume that actual hazardous waste leachates will fall into the higher concentration categories. Thus, this matrix suggests that most leachate treatment situations will involve aqueous streams containing primarily either inorganic or organic contaminants at relatively high concentrations. Situations will arise, however, where both organic and inorganic contaminants will be present in

*Water quality criteria derived from Quality Criteria for Water, U.S. E.P.A., Washington, D.C., July, 1976.

FIGURE 3-1

WASTE STREAM CATEGORIZATION MATRIX

| | | INORGANICS CONCENTRATION | | |
|---|---|---|---|---|
| | | HIGH | MEDIUM | LOW |
| ORGANICS CONCENTRATION | HIGH | Sites 006<br>011 | Site 010 | Sites 001<br>002<br>003<br>005<br>021<br>023<br>024<br>025<br>026<br>027<br>028<br>029<br>030 |
| | MEDIUM | Site 002 | | Sites 008<br>009<br>013 |
| | LOW | Sites 004<br>012<br>014<br>015<br>016<br>018 | | |

leachates. The exact nature of the leachate, of course, will be dependent upon the materials disposed to any given site.

## 3.4 REFERENCES


1. Shuckrow, A. J., A. P. Pajak, and J. W. Osheka. Concentration Technologies for Hazardous Aqueous Waste Treatment. EPA-600/2-81-019, U.S. Environmental Protection Agency, Cincinnati, Ohio, 1981.

2. U.S. Environmental Protection Agency. Treatability Manual, Volume I. Treatability Data and Volume III Technologies for Control/Removal of Pollutants. EPA-600/8-80-042a and EPA-600/8-80-042c, U.S. Environmental Protection Agency, Washington, D.C., July, 1980.

3. U.S. Environmental Protection Agency. Hazardous Waste and Consolidated Permits Regulations. Federal Register. Vol. 45, No. 98, May 19, 1980.

# SECTION 4

# HAZARDOUS WASTE LEACHATE MANAGEMENT OPTIONS

## 4.1 GENERAL DISCUSSION

In the broadest sense, leachate management options include all of the decision factors throughout the entire hazardous waste management process which have an impact on the nature or generation potential of leachate. Thus, consideration of leachate management options could begin with the manufacturing process and extend through the hazardous waste management chain to leachate treatment/disposal operations. This concept is illustrated in Figure 4-1 which divides the hazardous waste management process into four elements: (1) waste generation, (2) hazardous waste treatment, (3) disposal site management, and (4) leachate treatment/disposal.

As indicated in Figure 4-1, hazardous waste generation can be minimized by:

- substituting raw materials,
- modifying manufacturing processes to reduce waste generation and/or to use recycled materials,
- segregating hazardous and non-hazardous wastes,
- reclaiming constituents in the hazardous waste for reuse or sale, and
- exchanging wastes with entities capable of using them in their production process.

Detailed consideration of the above measures is beyond the scope of this manual because source reduction is highly facility specific. Moreover, leachate management is only one of a number of complex considerations which enter into decisions about changes in the manufacturing process.

Therefore, this section deals with three leachate management options:

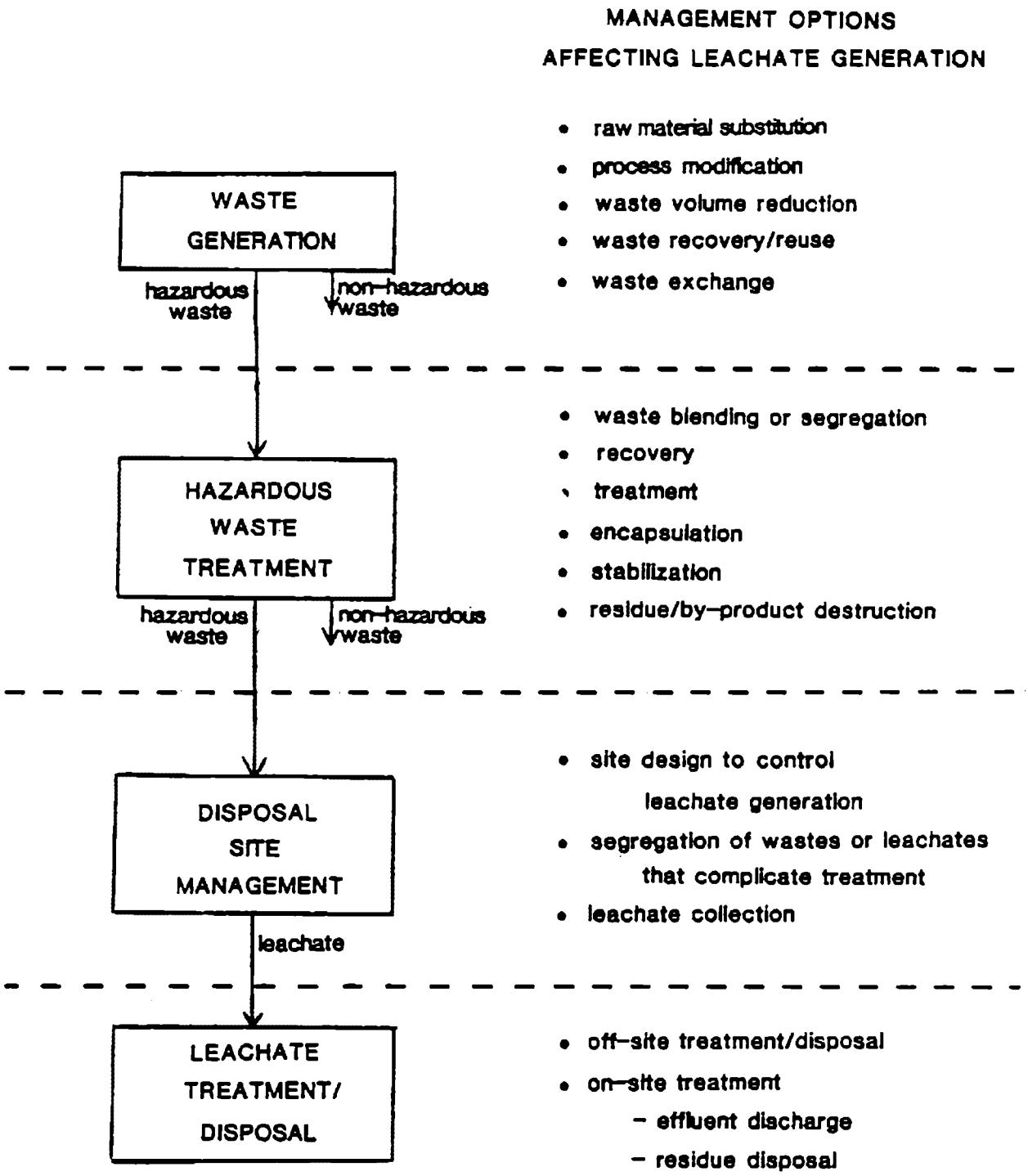


Figure 4-1. Waste management options - effect on leachate generation.

(1) Hazardous Waste Treatment - processing hazardous waste prior to disposal to reduce or eliminate the hazardous properties of the waste, or to reduce the potential leachability of the waste;

(2) Disposal Site Management - managing the disposal site to control the quantity of leachate generated, and/or to effect the nature and treatability of the leachate;

(3) Leachate Treatment/Disposal - processing the leachate to render it acceptable for discharge or ultimate disposal.

Hence, leachate generation and its treatment/disposal is influenced directly by precedent hazardous waste treatment and disposal site options. In order to deal effectively with leachate, it is important that the reader have a thorough understanding of all the various options available. However, as a practical matter, site operators may not have full control over some of these options, and it is expected that leachate will be generated at most sites.

Thus, the central focus of this section is upon leachate management subsequent to leachate generation. Because companion manuals in this series discuss facets of waste treatment and disposal site management in detail, this manual provides only brief descriptions of some options, referring the user to the appropriate companion manuals for details. On the other hand, information on leachate treatment/disposal options from this section forms the basis of the remainder of this report.

## 4.2 HAZARDOUS WASTE TREATMENT

Treatment prior to disposal of hazardous waste can accomplish one or more of the following:

(1) detoxification of the entire waste stream;

(2) concentration of hazardous constituents in a reduced volume waste stream which can be further treated, detoxified, destroyed, or reused;

(3) fixation of the waste in a matrix which will inhibit leaching; and

(4) encapsulation of the waste to prevent leaching.

The treatment approach chosen in any given instance depends upon numerous factors including waste characteristics, degree of treatment necessary, and availabililty and cost of materials. In addition, treatment may be undertaken at the point of generation of the waste or at a central waste treatment facility.

Whereas treatment at the point of generation would involve an approach highly specific to wastes generated at a given site, a central hazardous waste treatment facility generally will include several treatment operations to permit processing a variety of wastes.

Decisions to treat or not to treat a hazardous waste prior to disposal and how best to accomplish such treatment involve a number of complex factors and are highly situation specific. Moreover, the factors involved encompass broader concerns than leachate management.

Companion resource documents in this EPA series describe various aspects of hazardous waste treatment in detail. Pertinent documents include:

Physical, Chemical, and Biological Treatment;

Guidance Manual for Hazardous Waste Incineration;

Engineering Handbook for Hazardous Waste Incineration;

Guide to the Disposal of Chemically Stabilized and Solidified Wastes, SW-872; and

Hazardous Waste Land Treatment, SW-874.

The interested reader is referred to the above resource documents for in depth discussions of various hazardous waste treatment technologies. Briefly, the technologies which may be employed to accomplish detoxification or concentration of a hazardous constituent include:

| | |
|---|---|
| Air stripping | Ion exchange |
| Biological treatment | Liquid ion exchange |
| Carbon adsorption | Liquid-liquid solvent extraction |
| Centrifugation | Oxidation/Reduction |
| Dissolution | Precipitation |
| Distillation | Resin adsorption |
| Evaporaton | Reverse osmosis |
| Filtration | Sedimentation |
| Flocculation | Steam stripping |
| Flotation | Ultrafiltration |
| High gradient magnetic separation | Wet oxidation |
| Incineration | |

This list is not exhaustive. It also should be noted that the technologies listed are unit processes which often are used as components of a larger process train (treatment system). Moreover, these treatment techniques produce secondary waste streams

which themselves require further treatment or disposal. Such waste residues, sludges, or brines may or may not be hazardous. Of greatest concern to the user of this manual is the nature of the secondary hazardous waste stream and its potential impact on leachate generation.

Another pre-disposal treatment procedure can be used to minimize the leachability of a waste. The goal of solidification/fixation is to decrease the solubility and/or increase the volume-to-surface area ratio of the hazardous waste, limiting the mobility of a compound through the landfill or surface impoundment. This is normally accomplished by chemically or physically binding the waste to a fixing agent or by encapsulating the waste. The technique does not actually detoxify the waste; rather, it reduces the rate of release of toxic constituents.

Six types of chemical stabilization methods are listed below:

- silicate and cement based
- lime based
- self-cementing
- thermoplastic based
- organic polymer based
- vitrification

The advantages, disadvantages, and the most applicable waste type for each stabilization technique are shown in Table 4-1. Most of the listed methods are applicable primarily to inorganic wastes.

Encapsulation involves combining the waste with a small amount of a binder material, forming the mixture into a suitable shape, and then coating it with a jacket of material such as polyethylene. The resulting product is very water resistant; it is also virtually leach-free as long as the jacket is intact. Encapsulation has not been demonstrated on a large scale.

## 4.3 DISPOSAL SITE MANAGEMENT

Several opportunities exist to control or limit leachate formation at the hazardous waste landfill or impoundment. These methods generally involve limiting water percolation into and through the disposal site by means of liners, covers, and other liquid diversion techniques. The reader is referred to the following technical resource documents for detailed discussions of

TABLE 4-1. STABILIZATION/FIXATION TECHNIQUES

| TECHNOLOGY | STABILIZATION PROCESS | APPLICABLE WASTES | ADVANTAGES | DISADVANTAGES |
|---|---|---|---|---|
| Cement and silicate based solidification/fixation | Chemical fixation/solidification | Dry or wet (generally inorganic) | Employs inexpensive materials<br>Tolerant of diverse chemical conditions<br>Very effective with heavy metal wastes<br>Represents highly developed technology | Some organics detrimental to setting of concrete<br>Uncoated cement/sludge mixtures subject to degradation and leaching under conditions of low pH<br>Increased weight and size of waste increase transport and landfilling costs |
| Lime based solidification/fixation | Chemical fixation/solidification | Dry or wet (generally inorganic) | Employs inexpensive materials<br>Represents highly developed technology<br>Addition of flyash allows disposal of two waste products in one process | Same as for cement and silicated based solidification/fixation |
| Self-cementing techniques | Chemical fixation/solidification | Dry or wet | Process requires few additives<br>Cement mixture sets very quickly | Some organics detrimental to setting of concrete<br>Uncoated cement/sludge mixtures subject to degradation and leaching under conditions of low pH<br>Increased weight and size of waste increase transport and landfilling costs<br>Requires expensive equipment and skilled labor<br>Process restricted to wastes with a high calcium sulfite/sulfate content |
| Thermoplastic based solidification/fixation | Physical fixation | Dry (generally inorganic) | Very effective in reducing chemical migration<br>Leaching solutions have little effect on products | Requires expensive equipment and skilled labor<br>Wet wastes reduce effectiveness of process<br>Cannot be used with strong oxidants, dehydrated salts or thermoplastic solvents |
| Organic polymer processes | Physical fixation | Dry or wet (primarily toxic organics) | Only a small amount of fixative is required to form the polymer's matrix<br>Relatively low density of product reduces transportation costs | Waste is held very loosely in the polymer<br>Low pH of catalysts tends to make metals more soluble<br>Biodegradability of some polymers may create landfilling problems |

(continued)

TABLE 4-1 (continued)

| | | | | |
|---|---|---|---|---|
| Vitrification | Physical fixation | Dry | Vitrified material has an extremely low leach rate<br>Provides a high degree of containment<br>Employs inexpensive materials | High temperatures may vaporize some hazardous waste constituents before they are fixed<br>Requires large heat expenditure, expensive equipment, and skilled personnel<br>Costs prohibitive to all but high level radioactive and extremely toxic wastes |
| Encapsulation | Chemical containment | Dry or wet | Product is very water resistant<br>Virtually leach-free as long as the inert jacket is intact<br>Life cycle cost is competitive or lower than other technologies | Leaching will commence if jacket is damaged<br>Not demonstrated on a large scale. |

these various techniques:

Evaluating Cover Systems for Solid and Hazardous Waste, SW-867;

Hydrologic Simulation on Solid Waste Disposal Sites, SW-868;

Landfill and Surface Impoundment Performance Evaluation, SW-869;

Lining of Waste Impoundment and Disposal Facilities, SW-870; and

Closure of Hazardous Waste Surface Impoundments, SW-873.

Another disposal site management option which may impact leachate composition is waste segregation prior to disposal. That is, it may be desirable to dispose of certain types of wastes in separate cells at the site or exclude others altogether. Such an approach could be used to avoid combining wastes which would ultimately complicate leachate treatment. Decisions regarding waste segregation, however, include factors in addition to leachate management considerations and are, to a large degree, site specific. Therefore, such evaluations must be made on a case-by-case basis.

Regardless of measures adopted to limit leachate generation, a leachate is likely to be formed, especially in areas where precipitation exceeds evaporation and/or at sites used for disposal of liquid-containing hazardous wastes. Thus, leachate collection and storage systems are an integral part of disposal site management.

The need for and methods of leachate collection depend on local conditions at the site. Leachate volume fluctuations make collection and storage key factors in treating hazardous waste leachate. The volume of leachate can vary significantly with time because of rainfall and snowmelt conditions that may affect the landfilled area. Effective collection allows for an equalizing and storage capability which will reduce overloading and avoid possible reduction in subsequent treatment process efficiency. Collection and storage may also allow for a reduction in the necessary equipment cost by providing for periodic or batch treatment of the leachate. This potentially could permit a mobile unit to treat the leachate from several sites on a rotating basis, increasing treatment unit utilization and decreasing individual site cost.

The remainder of this manual focuses on managing leachate subsequent to generation and collection.

## 4.4 LEACHATE MANAGEMENT

Once leachate has been collected, numerous alternatives exist for treatment and disposal. Treatment can be accomplished either off-site or on-site. By using off-site treatment, disposal from the landfill operator's perspective also is accomplished. In the case of on-site treatment, disposal options must be examined in concert with treatment options because of the different degrees of treatment which may be required. Typically, disposal can be accomplished by:

- discharge to receiving surface waters,
- discharge to publicly owned treatment works,
- shipment to a hazardous waste treatment facility,
- deep well injection, or
- land treatment.

In the remainder of this section, off-site treatment is discussed briefly and important considerations are identified. Then, an overview of on-site treatment is presented (available treatment technologies are discussed in Section 5) and disposal considerations are discussed.

### 4.4.1 Off-Site Treatment/Disposal Options

Off-site treatment/disposal of leachate for purposes of this manual refers to treatment/disposal at a facility not associated with the landfill or surface impoundment operation. Primary off-site treatment/disposal alternatives include:

- publicly owned treatment works (POTW),
- hazardous waste treatment/disposal facilities, and
- industrial waste treatment facilities.

Technologies used at an off-site facililty can be any of those listed in Section 5 of this manual. Other possible technologies include land treatment and deep well injection. The former technology serves as both a treatment and disposal process while the latter is a disposal mechanism.

Primary concerns of the owner of the leachate generating facility need not be with the technologies employed at an approved off-site facility but rather with proper manifesting, on-site storage, transportation, and pretreatment of the leachate and the associated economics. The reader is reminded that if the leachate is determined to be a hazardous waste, it

must be managed the same as any other hazardous waste. This means that if it is transported to another site for any purpose (treatment/disposal) the hazardous waste manifest requirements (under RCRA) must be satisfied.

Additionally, if the leachate generating facility collects hazardous leachate in surface impoundments either for storage prior to transport off the site or as part of the on-site treatment process, the impoundment must comply with pertinent RCRA regulations. Additional information on impoundment design and performance can be found in the following technical resource documents:

- Lining of Waste Impoundment and Disposal Facilities, SW-870,
- Landfill and Surface Impoundment Performance Evaluation, SW-869, and
- Closure of Hazardous Waste Surface Impoundment, SW-873.

Numerous factors should be evaluated before selecting or approving an off-site treatment/disposal option. Costs and guarantees provided by the off-site facility will be major considerations. However, other important factors (which may or may not influence costs) also should be considered:

- availability and proximity of an approved off-site facility;
- technologies employed at the off-site facility;
- need for pretreatment prior to shipment off site;
- duration of the required service;
- projected operating life of the off-site facility;
- regulatory agency limitations on the off-site facility including air, water, and waste permits;
- capacities of the off-site facility;
- reliability of service which can be provided by the off-site facility;
- quantity of hazardous leachate to be transported and methods of transport;
- public attitudes or other constraints to shipment of the hazardous leachate;

- capability to establish on-site treatment including capital, land, and qualified personnel;

- disposal options if on-site treatment is feasible;

- expected variations in leachate quality during the life of the disposal site including post-closure period; and

- ability of the off-site facility to accept varying quality leachates or availability of another facility to accept leachate should quality or quantity change due to changes in disposal site practices or aging of the disposal site.

For a number of reasons, it is expected that off-site treatment will be feasible only in a limited number of cases. In most instances, neither POTWs nor industrial waste treatment facilities will be available at reasonable distances or will be technically capable of accepting hazardous leachate while still satisfying their permit requirements. It also is unlikely that such facilities will assume the potential liabilities associated with accepting a hazardous leachate which is expected to vary in composition and quantity. Therefore, stringent pretreatment requirements probably would be imposed making on-site treatment a necessity.

Leachate treatment at a central hazardous waste treatment facility is likely to be technically feasible. Transportation costs are expected to be a key factor in determining the viability of this option, at least until more approved hazardous waste treatment facilities become available.

### 4.4.2 On-Site Treatment/Disposal

On-site hazardous leachate treatment can be used to accomplish either pretreatment of the leachate with discharge to another facility for additional treatment before disposal or treatment complete enough to meet direct discharge limitations. Pretreatment processes will be dictated by the capabilities of the subsequent off-site facility. Objectives of pretreatment could be to:

- equalize leachate quality and quantity fluctuations and provide short term storage;

- adjust pH to within acceptable limits for discharge to a POTW;

- reduce concentrations of toxic components to acceptable levels for discharge to a POTW;

- remove hazardous constituents so that a portion of the leachate can be judged non-hazardous; the hazardous or non-hazardous fraction could be shipped to off-site treatment; or

- reduce the volume of leachate transported off-site.

Complete treatment, on the other hand, should produce an effluent suitable for discharge to surface water or groundwater. Thus, the major difference between complete on-site treatment and pretreatment is likely to be the extent of the treatment. That is, the treatment technologies are essentially the same, but the extent of application will differ depending upon effluent objectives.

Potential leachate treatment technologies are discussed in Section 5. Unfortunately, there has been very little actual application of these technologies to hazardous waste leachate treatment. However, experience with other applications can be used to guide selection of leachate treatment schemes. Section 6 of this manual addresses the various decision factors involved in selection of leachate treatment sequences.

Most leachate treatment processes will result in the production of by-products such as sludges, air pollution control residues, spent adsorption or ion exchange materials, or fouled membranes which also require disposal. Because these materials will contain hazardous constituents, they also must be dealt with as hazardous wastes. One apparent alternative is on-site disposal. Another is off-site disposal; however, manifest requirements and transportation costs are disadvantages. Treatment of the residue by dewatering, fixation, or other methods prior to disposal will be influenced by disposal site requirements and residue handling procedures. Residue disposal considerations may be the determining factor in selection of a leachate management technique.

In addition to treatment technology, other considerations important to design of an effective on-site leachate management program include:

- sampling and monitoring of raw leachate composition and quality of effluent and by-product streams,

- manifesting of hazardous leachate and residues shipped off the site,

- personnel safety and training,

- routine maintenance,

- contingency plans and emergency provisions, and

- equipment redundancies and back-up.

These items are discussed in further detail in Sections 7 and 8 of this manual.

One possible approach to on-site leachate management which is not discussed subsequently is leachate recycling. This approach involves the controlled collection and recirculation of leachate through a landfill for the purpose of promoting rapid landfill stabilization. The precise mode of operation of leachate recycling is poorly understood since it has only recently been investigated in sanitary landfill simulations. Therefore, the state of development of this technique is judged to be insufficient for it to merit further consideration as a primary approach to hazardous waste leachate management at this time. However, leachate recycling may have some merit as an interim measure under certain circumstances as discussed in Section 6.

## 4.5 SUMMARY

This section described various hazardous waste leachate management options. Methods to minimize waste generation were judged to be beyond the scope of this manual. Treatment of hazardous wastes prior to emplacement influence leachate generation, but are dealt with in detail in other technical resource documents. Likewise, disposal site management options are described in detail elsewhere. Hence, the principal focus was upon leachate management, i.e., treatment and disposal, which can be performed either off-site or at the waste disposal site. Based upon the findings of this section, on-site treatment/disposal is the most likely option. Therefore, as indicated above, this manual will emphasize the on-site treatment/disposal alternative.

# SECTION 5

# LEACHATE TREATMENT TECHNOLOGIES

## 5.1 GENERAL DISCUSSION

The objective of this section is to provide information on technologies which have potential application to hazardous waste leachate treatment. The section is organized to first present information on the treatability of specific compounds which may be present in leachate. This and other information then is used to judge the potential applicability of the following twenty unit treatment processes:

| | |
|---|---|
| Biological Treatment | Evaporation |
| Carbon Adsorption | Filtration |
| Catalysis | Flocculation |
| Chemical Oxidation | Ion Exchange |
| Chemical Reduction | Resin Adsorption |
| Chemical Precipitation | Reverse Osmosis |
| Crystallization | Solvent Extraction |
| Density Separation | Stripping |
| Dialysis/Electrodialysis | Ultrafiltration |
| Distillation | Wet Oxidation |

These processes then are organized into categories based upon application potential and operating experience. A matrix is provided to aid identification of the most applicable processes on the basis of leachate chemical composition.

Subsequently, attention is directed to by-products which may be formed during leachate treatment. These include residuals and gaseous emissions. Finally, capital and operating cost information is given for selected technologies.

Because hazardous waste leachates vary widely in composition and often contain a diversity of constituents, it is likely that process trains comprised of several unit treatment technologies will be needed to achieve high levels of treatment in the most cost-effective manner. Thus, the information contained in this section can be used to formulate process trains from individual unit processes each intended to fulfill a given task.

Section 6 of this manual addresses selection of a treatment process for a given situation and presents example process

trains for selected situations.

Although research (1,2) currently is underway to better define performance and design criteria for hazardous waste leachate treatment technologies, actual full scale treatment process applications are few. Activated carbon adsorption and chemical coagulation/precipitation are the only technologies known to have been used in larger scale applications.

Experience with sanitary landfill leachate treatment is more extensive but is still somewhat limited. On the other hand, many technologies have been used to treat industrial process wastewaters containing hazardous constituents. This industrial experience has some applicability to leachate treatment because of similarities in chemical constituents and discharge goals. Thus, the treatment technologies considered in this manual include those which have been applied to wastes in all three of the above categories - - hazardous waste leachate, sanitary landfill leachate, and industrial process wastewaters.

Information contained in this manual should enable the user to identify treatment technologies which may be applicable in given situations and to determine approximate levels of performance. Conceptual design may be possible in some cases; however, because leachate composition will be variable and process performance will be extremely wastewater specific, actual treatability studies are recommended to screen potential processes and develop design criteria - - if a leachate is available.

## 5.2 TREATABILITY OF LEACHATE CONSTITUENTS

A recent Environmental Protection Agency report (1) summarized data on the treatability of over 500 compounds, many of which are listed in Subtitle C, Section 3001 of RCRA. Although the focus of the report is on concentration technologies and it thus does not fully address all potential leachate treatment options, much useful information is contained therein. Therefore the summary treatability data contained in this report is reproduced in Appendix Table E-1. This information can be used to guide one in the identification of potential hazardous waste leachate treatment technologies. However, because this information was derived from numerous studies, ranging from laboratory to full scale on wastewaters ranging from pure compounds to industrial wastes and leachates, the reader is cautioned not to directly apply these published data to a leachate treatment situation.

Primary organization of Appendix Table E-1 is by treatment process. For each process, the treatability of individual chemical compounds is given with the compounds arranged in alphabetical order within chemical classifications. The following treatment processes are included:

| Process | Process Code No. Used in Table E-1 |
|---|---|
| Biological | I |
| Coagulation/Precipitation | II |
| Reverse Osmosis | III |
| Ultrafiltration | IV |
| Stripping | V |
| Solvent Extraction | VII |
| Carbon Adsorption | IX |
| Resin Adsorption | X |
| Miscellaneous Sorbents | XII |

The chemical classification system used is as follows:

| Chemical Classification | Classification Code No. Used in Table E-1 |
|---|---|
| Alcohols | A |
| Aliphatics | B |
| Amines | C |
| Aromatics | D |
| Ethers | E |
| Halocarbons | F |
| Metals | G |
| PCBs | I |
| Pesticides | J |
| Phenols | K |
| Phthalates | L |
| Polynuclear Aromatics | M |

In order to facilitate use of Appendix Table E-1, an index has been prepared and is presented immediately before Table E-1. This index lists compounds contained in Table E-1 in alphabetical order and indicates for each compound its pollutant group (RCRA, Section 311, or Priority Pollutant), chemical classification (alcohol, aliphatic, etc.), and the compound code number used in Appendix Table E-1. This latter number can be used to locate the compound in the main table.

In order to present the large quantity of information in a concise manner, it was necessary to code some of the information in Table E-1. The coding system is explained in footnotes at the end of the Appendix.

Many chemical compounds are known by several names. Attempts were made to use preferred or generic names according to The Merck Index. However, in some cases it was necessary to use the names which were used in the reference documents. Users of Appendix E are advised to check for compounds under several potential alphabetic listings.

Once the compounds of concern in a leachate have been identified, the user can refer to Appendix E to learn which treatment techniques have been applied to each hazardous constitutent found in the leachate. These techniques then can be evaluated for treatment feasibility, and a treatment scheme can be proposed based on a combination of the treatment options for the various constituents. For example, suppose a leachate sample is analyzed and found to contain significant concentrations of acrylonitrile and 2-chlorophenol. Table E-1 shows that activated sludge is a common treatment technique with removal efficiencies of over 90% for both compounds. Thus, activated sludge is a potentially viable treatment option. However, the waste type listed in the table also must be considered because direct correlation to leachate may not be possible. In this example, the acrylonitrile treatability study was done on an industrial wastewater and the 2-chlorophenol waste type was not known. Activated sludge should be considered an option for leachate control but not installed until additional testing has been completed. The information in the table should be used as a guideline and not as a rule.

Additional information on the treatability of 203 specific compounds is contained in the Treatability Manual, Volume I, Treatability Data (4). As stated in that manual, pollutants addressed were taken from the list of 297 compounds considered in Section 311 of the Water Pollution Control Act. Selection was based on a consideration of pollutant toxicity and stability in an aqueous environment. For each pollutant three items are presented:

- description of the pure species,
- industrial occurrence, and
- treatability/removability.

It should be noted that the Treatability Manual is oriented toward treatment of industrial wastewater rather than hazardous waste leachate.

## 5.3 UNIT PROCESS APPLICATION POTENTIAL

As indicated in Section 5.1, twenty unit processes were identified as possibly applicable to hazardous waste leachate treatment. These unit processes were reviewed and assessed as to their potential for the application of interest. Unit process application potentials are discussed below. No attempt has been made to provide information on the theory, design, or operation of the technologies. Descriptions of the technologies may be found in standard texts and design manuals. References (1) and (3) may be especially useful supplemental information sources. Application data for several technologies to sanitary

landfill leachate and industrial wastewater treatment are summarized in Appendices C and D, respectively.

### 5.3.1 Biological Treatment

Biological processes are, in general, the most cost-effective techniques for treating aqueous waste streams containing organic constituents. They have been applied successfully at full scale to a wide variety of industrial wastes and sanitary landfill, although there are no known full scale hazardous waste treatment facilities. Environmental impacts associated with biological processes are limited. Probably of greatest concern in this regard is the potential release of volatile organic compounds to the atmosphere as a result of aeration.

Hazardous waste leachates may contain organic compounds which are not readily biodegradable. Therefore, it may be necessary to acclimate a biological system to the waste to be treated prior to routine operation of the process. Moreover, leachates may contain compounds which are refractory and/or toxic to biological systems. The presence of such compounds at high concentrations may preclude use of biological treatment or may necessitate use of another treatment process in conjunction with biological treatment.

For biological processes to function, several operational requirements must be satisfied. Most notable, near neutral pH must be maintained and nutrient requirements (carbon, nitrogen, and phosphorus as well as trace elements) must be satisfied. Moreover, sudden changes in loading (both concentration and flow) must be avoided.

Of the biological treatment options, the activated sludge process, in one of its modifications, appears to have the greatest potential for leachate treatment because it can be controlled to the greatest extent and best lends itself to the development of an acclimated culture. However, anaerobic filtration or anaerobic lagoons because of ease of operation, minimal sludge production, and energy efficiencies merit consideration in some situations. Thus, biological treatment is judged to be a viable technology which should be considered for treatment of hazardous waste leachates containing organic constituents.

### 5.3.2 Carbon Adsorption

Activated carbon adsorption is a well developed technology which has a wide range of potential waste treatment applications. It is especially well suited for the removal of mixed organic contaminants from aqueous wastes. Numerous examples of full scale waste treatment applications exist. These include treatment of a variety of industrial wastewaters, cleanup of spilled hazardous materials, and treatment of leachates and ground and surface waters contaminated by hazardous wastes.

No serious environmental impacts are associated with carbon systems employing regeneration. If regeneration is not carried out, impacts could result from the disposal of carbon contaminated with hazardous materials.

Energy requirements for systems employing thermal reactivation are significant - approximately 14,000-18,600 kJ/kg of carbon (6,000-8,000 Btu per pound).

Unit costs for carbon adsorption can vary widely depending upon the waste to be treated, the adsorption system, and the regeneration technique. However, it has been shown to be an economical approach in numerous instances.

Carbon adsorption must be considered a viable candidate for treatment of hazardous leachates containing organic contaminants. Granular activated carbon is the most well developed approach and may be used to provide complete treatment, pretreatment, or effluent polishing. Combined biological-carbon systems also appear promising for leachate treatment.

### 5.3.3 Catalysis

Several potential applications of catalysis to waste treatment have been identified but commercial practicality has not been demonstrated.

Catalysts generally are very selective and, while potentially applicable to destruction or detoxification of a given component of a complex waste stream, do not have broad spectrum applicability.

### 5.3.4 Chemical Oxidation

Relatively poor removals of most organics are effected by chemical oxidation; although, chemical transformations may occur which could facilitate treatment by other processes. Inorganics often can be transferred to a valence state which is less toxic

or which facilitates precipitation. Most chemical oxidation technologies (including ozone) are fairly well developed and have been demonstrated successfully at full scale on several industrial wastewaters and at laboratory scale on numerous organic compounds representing several chemical classifications. Applications, however, have been generally on dilute waste streams.

Ozonation, especially, is judged to have potential for aqueous hazardous waste treatment. It can serve as a pretreatment process prior to biological treatment; it also can be used alone or in concert with UV irradiation as the primary treatment process. Combination of ozonation and granular activated carbon has yielded mixed results; it appears that wastewater composition greatly influences the performance of this process train.

Oxidation using ozone or hydrogen peroxide does not result in the formation of chlorinated organics which may be a problem when using alkaline chlorination. Residual ozone in the effluent decomposes but off-gases containing residual ozone should be passed through activated carbon to decompose the ozone.

### 5.3.5 Chemical Reduction

As with chemical oxidation, reduction is an effective means of removing inorganic compounds or reducing their toxicity. However, because compounds are concentrated in a precipitated sludge, this residue may require careful management. Introduction of foreign ions into the waste is a real or potential disadvantage with many of the reducing agents. A major application for chemical reduction would be reduction of hexavalent chromium to trivalent chromium using sulfur dioxide, sulfite salts, or ferrous sulfate. Precipitation of trivalent chromium as $Cr(OH)_3$ with lime or sodium carbonate usually follows reduction.

The process has little potential for organic waste streams.

### 5.3.6 Chemical Precipitation

Precipitation processes have been in full scale operation for many years. The technique can be applied to almost any liquid waste stream containing a precipitable hazardous constituent. Required equipment is commercially available. Associated costs are relatively low and thus, precipitation can be applied to relatively large volumes of liquid wastes. Energy consumption also is relatively low.

Precipitation processes result in the production of a wet sludge which may be considered hazardous and must be further processed prior to ultimate disposal. In some instances, the potential for material recovery from this sludge exists. However, very often, non-target materials are precipitated together with the material of interest thus complicating or eliminating the feasibility of material recovery.

Usually, simple treatability studies must be carried out prior to applying the process to a waste stream to determine the chemical of choice, the degree of removal, and the required chemical dose.

In most instances, precipitation is considered to be the technique of choice for removal of metals (arsenic, cadmium, chromium, copper, fluoride, lead, manganese, mercury, nickel) and certain anionic species (phosphates, sulfates, fluorides) from aqueous hazardous wastes.

### 5.3.7 Crystallization

The inability of the crystallization process to respond to changing wastewater characteristics and its operational complexity are primary reasons why this process has not been reduced to practice. There is no ongoing research and past efforts to treat a variety of industrial wastewaters and sludges have had limited success. This process is judged to have little potential for the application of interest.

### 5.3.8 Density Separation

Density separation, as discussed herein, includes sedimentation and flotation because they are the most commonly used techniques for solids/liquids separation in wastewater treatment.

Sedimentation processes have been in use for many years, are easy to operate, are low-cost, and consume little energy. Required equipment is relatively simple and commercially available. The process can be applied to almost any liquid waste stream containing settleable material. It is considered to have high potential for leachate treatment. However, it is an ancillary process which will be utilized primarily in conjunction with some other technique such as chemical precipitation. Alternatively, it may be used as a pretreatment technique prior to another process such as carbon or resin adsorption.

Flotation is a proven solids/liquids separation technique for certain industrial applications. It is characterized by higher operating costs and more skilled maintenance requirements than gravity sedimentation. Power requirements also are higher.

This technique is judged to be potentially applicable but probably only in situations where the leachate contains high concentrations of oil and grease.

### 5.3.9 Dialysis/Electrodialysis

Neither dialysis nor electrodialysis have been judged to have much applicability to hazardous waste leachate treatment. Being most applicable for the removal of inorganic salts, they are not well suited to mixed constituent waste streams. Both rely heavily on recovery and reuse of at least one product stream to offset costs. Other problems include membrane plugging and deterioration and production of two output streams neither of which can be discharged directly.

### 5.3.10 Distillation

Distillation is judged to have limited applicability to treatment of complex hazardous waste leachate because of its high cost and energy requirements. Should the leachate consist primarily of organic solvents and halogenated organics distillation may be technically feasible although costly unless recovery is practiced.

### 5.3.11 Evaporation

Evaporation is not expected to have broad application to the treatment of hazardous waste leachate containing moderately volatile organic constituents (BP 100°C-300°C). These organics cannot be easily separated in a pretreatment stripper and will appear in the condensate from the evaporator to some extent depending on their volatility. Therefore, good clean separation of these organics is not possible without post-treatment of the condensate.

Other major disadvantages of evaporation are high capital and operating costs, and high energy requirements. This process is more adaptable to wastewaters with high concentrations of organic pollutants than to dilute wastewaters.

### 5.3.12 Filtration

Both granular and flexible media filtration are well developed processes currently being used in a wide variety of applications. A wide spectrum of filtration systems are commercially available. The economics of filtration are reasonable for many applications. Energy requirements are relatively low and operational parameters are well defined. Therefore, filtration is judged to be a good candidate for leachate treatment. However, it is not a primary treatment process but rather will be used to support other processes either as a polishing step

(granular media) subsequent to precipitation and sedimentation or as a dewatering process (flexible media) for sludges generated in other processes.

### 5.3.13 Flocculation

Flocculation must be carried out in conjunction with a solid/liquid separation process, usually sedimentation. Often, flocculation is preceded by precipitation.

It is a relatively simple process to operate and has been used for many years to improve particle sedimentation. Necessary equipment is commercially available. Both costs and energy consumption are relatively low. The process can be applied to almost any aqueous waste stream containing precipitable and/or suspended material.

Flocculation followed by sedimentation is judged to be a viable candidate process for hazardous waste leachate treatment, particularly where suspended solids and/or heavy metal removal is an objective. It may be used in conjunction with sedimentation as a pretreatment step prior to a subsequent process such as activated carbon adsorption.

In most instances, the applicability of the technique, the flocculating chemicals to be used, and the chemical dose can be determined based upon experience and simple laboratory treatabililty tests.

### 5.3.14 Ion Exchange

Ion exchange is a proven process with a long history of use. It will remove dissolved salts, primarily inorganics, from aqueous solutions. For many applications, particularly where product recovery is possible, ion exchange is a relatively economical process. Also, it is characterized by low energy requirements.

Ion exchange is judged to have some potential for leachate treatment in situations where it is necessary to remove dissolved inorganic species. However, other competing processes - precipitation, flocculation, and sedimentation - are more broadly applicable to mixed waste streams containing suspended solids, and a spectrum of organic and inorganic species. These competing processes also usually are more economical. Moreover, the upper concentration limit for the exchangeable ions for efficient operation is generally 2,500 mg/l, expressed as calcium carbonate (or 0.05 equivalents/l). This upper limit is due primarily to the time requirements of the operation cycle. A high concentration of exchangeable ion results in rapid exhaustion during the service cycle, with the result that regeneration requirements, both for equipment and of the percentage of resin

inventory undergoing regeneration at any time, become inordinately high. There also is an upper concentration limit (around 10,000-20,000 mg/l), which is governed by the properties of the ion exchangers themselves, in that the selectivity (preference for one ion over another) begins to decrease as the total concentration of dissolved salts (ionic strength) increases.

Synthetic resins can be damaged by oxidizing agents and heat. In addition, the stream to be treated should contain no suspended matter or other materials that will foul the resin or that cannot be removed by the backwash operation. Some organic compounds, particularly aromatics, will be irreversibly adsorbed by the resins, and this will result in a decreased capacity, as for example in the case of electroplating bath additives.

Thus, the use of ion exchange probably would be limited to situations where a polishing step was required to remove an inorganic constituent which could not be reduced to satisfactory levels by preceding treatment processes or in specialized situations for removal of an inorganic constituent. Therefore, while ion exchange is believed to have some potential it is not a process which should normally receive primary consideration.

### 5.3.15 Resin Adsorption

Laboratory studies of resin adsorption have shown that phthalate esters, aldehydes and ketones, alcohols, chlorinated aromatics, aromatics, esters, amines, chlorinated alkanes and alkenes, and pesticides are adsorbable. Resins adsorbed certain amines and aromatics better than activated carbon did.

Resin adsorption has greatest applicability:

- when color due to organic molecules must be removed;
- when solute recovery is practical or thermal regeneration is not practical;
- where selective adsorption is desired;
- where low leakages are required; or
- where wastewaters contain high levels of dissolved inorganics.

Polymeric adsorbents are nonpolar with an affinity for nonpolar solutes in polar solvents or of intermediate polarity capable of sorbing nonpolar solutes from polar solvents and polar solutes from nonpolar solvents. Carbonaceous resins have a chemical composition which is intermediate between polymeric adsorbents and activated carbon and are available in a range of surface polarities.

Because of selectivity, rapid adsorption kinetics, and chemical regenerability, resin adsorption has a wide range of potential applications for organic waste streams. The primary disadvantage is high initial cost; although, this may be offset if recovery of the solute is practical. Costs for resins recently have been quoted to be $11-33 per kg ($5-15 per pound, 1980 dollars). While not economically competitive with carbon for high volume, high concentration, mixed constituent wastes, benefits may be gained by sequential resin and carbon adsorption.

Energy requirements are heavily dependent upon whether solute recovery from the solvent wash is practiced. Without solute recovery, energy costs account for 5% of operating costs; however, with solute recovery using distillation, energy costs could account for 50% of operating costs but solvent costs are markedly reduced.

As with activated carbon, the only major environmental impacts relate to the regeneration process. If not reused, spent regenerant requires disposal, frequently by incineration or land disposal.

Resin sorption is judged to be a potentially viable candidate for treatment of hazardous waste leachates. The technology, however, has not been as well defined as carbon adsorption.

### 5.3.16 Reverse Osmosis

Reverse osmosis is a relatively new process which has been reduced to practice for some industrial wastewater treatment applications such as inorganic salt removal from rinse waters. Energy requirements for commercially available systems are approximately 7.6 x 10 - 9.5 x 10 J/m of product water (8-10 kwh/1000 gal). Reverse osmosis is a relatively costly process but it is capable of producing high purity water. The principal application is to concentration of dilute solutions of inorganic and some organic solutes. Problems associated with RO include concentration polarization (decreased water production with time per unit area of membrane), the need for pretreatment to remove solids (colloidal and suspended), the need for dechlorination when using polyamide membranes, and membrane fouling due to precipitation of insoluble salts. pH control is important.

The state of development is such that it necessitates extensive bench and pilot scale testing prior to almost any potential application to ascertain feasibility. Thus, reverse osmosis is judged to have limited potential for leachate treatment. Its use probably would be limited to polishing operations subsequent to other more conventional processes or to concentra-

ting pollutants (multicharged cations and anions and moderate and high molecular weight organics) into a stream which would be processed further.

### 5.3.17 Solvent Extraction

Solvent extraction is judged to have minimal potential for leachate treatment. Broad spectrum sorbents such as activated carbon are expected to be more effective in treating waste streams containing a diversity of organic compounds. Carbon adsorption also will be more economical unless a valuable product can be recovered which is unlikely in most leachate treatment situations.

### 5.3.18 Stripping

Air stripping is judged to have potential for leachate treatment primarily when ammonia removal is desired and then only when the concentrations of other volatile compounds are low enough to avoid unacceptable environmental impacts by the air emissions. The process would be difficult to optimize for leachate containing a spectrum of volatile and non-volatile compounds. Air stripping does have appeal as a pretreatment prior to another process such as adsorption to extend the life of the sorbent by removing sorbable organic constituents. However, air pollution control requirements are likely to be severe thus making the economics less attractive. Some air stripping of volatile components will occur during the course of any treatment process and may result in safety hazards or air quality problems. These problems are expected to be most severe from biological treatment processes using aeration devices.

Steam stripping has merit for wastes containing high concentrations of highly volatile compounds. It is a proven process for some applications but will require laboratory and bench scale investigations prior to application to leachates containing multiple organic compounds. Both energy requirements and costs are relatively high. By-product recovery to offset costs is unlikely. Steam stripping is judged to have greatest potential as a pretreatment step to reduce the load of volatile compounds to a subsequent treatment process. Organics concentrated in the overhead condensate stream also would require further treatment, possibly by wet oxidation.

### 5.3.19 Ultrafiltration

Ultrafiltration is a commercially used process with several industrial applications generally involving product recovery or production of highly purified solvent. It is characterized by high capital and operating costs with membrane replacement being a major factor. Energy costs could run as high as 30% of direct operating costs.

Ultrafiltration is judged to have limited potential for treating a complex leachate. Its use probably would be limited to relatively low volume leachate streams containing substantial quantities of high molecular weight (7,500 to 500,000) solutes such as oils. Concentrated organics would require further treatment possibly by wet oxidation or off-site incineration. Pilot testing is a prerequisite to use.

### 5.3.20 Wet Oxidation

Laboratory studies indicate that the process may have potential for treatment of high strength leachates or those containing toxic organics, especially those waste streams too dilute for incineration but too refractory for chemical or biological oxidation. The process has been applied at pilot and full scale on numerous sludges and non-hazardous wastes. In laboratory studies substantial destruction of several organic priority pollutants was achieved.

Claimed advantages of the process are that the degree of oxidation can sometimes be controlled by varying operating conditions and that supplemental energy requirements can be minimized in some situations. However, the process involves relatively high capital and operating costs and requires skilled operating labor.

At this time, the process should be considered as potentially suitable for hazardous waste leachate treatment. The area of greatest potential applicability appears to be treating concentrated organic streams generated by processes such as steam stripping, ultrafiltration, or reverse osmosis; still bottoms; biological treatment process waste sludges; and regeneration of powdered activated carbon used in bio-physical processes. Extensive site-specific treatability studies would be required to determine efficiencies, to develop design criteria, and to provide cost data to enable comparison with alternative technologies.

## 5.4 EVALUATION OF UNIT PROCESSES

In Section 5.3 of this manual candidate hazardous waste leachate treatment technologies were discussed and an assessment was presented of the potential applicability to leachate treatment. For the reasons discussed in Section 5.3, certain unit processes are judged to have minimal applicability to hazardous waste leachate treatment and thus, are not given further consideration herein. The remaining unit processes generally fall into one of two categories.

Processes placed in Category 1 are those judged to have the broadest potential range of leachate treatment applications. Moreover, processes in this category are those for which exten-

sive full scale operating experience exists, albeit for other applications.

Although Category 2 processes are judged to be potentially viable hazardous waste leachate technologies, either the potential applications are limited to more specialized treatment problems or less full scale experience exists. Category 1 and 2 processes are listed below together with the major area of application for the process.

Category 1. More experience, broad application range

biological treatment - soluble biodegradable organics and nutrients

chemical precipitation - soluble metals

carbon adsorption - soluble organics, especially toxics and refractories

density separation - wastewater suspended solids, chemical precipitates, oily materials

filtration - suspended solids and precipitates

Category 2. Less full scale experience, limited application

chemical oxidation - cyanide and organics

chemical reduction - hexavalent chromium

ion exchange - inorganics, especially fluoride and total dissolved solids

membranes (RO) - total dissolved solids

stripping (air) - ammonia nitrogen

wet oxidation - high strength or toxic organic aqueous streams

The approximate ability of Category 1 and 2 processes to treat compounds in the chemical classifications identified in Section 5.2 is summarized in Table 5-1. This table presents a brief overview which can be used to assist in the formulation of alternative process trains for leachates containing compounds from these chemical classifications.

Appendix E, which contains more detailed information on the treatability of specific compounds by many of these unit processes, also should be consulted during formulation of the proc-

TABLE 5-1. TREATMENT PROCESS APPLICABILITY MATRIX

| Chemical Classification | Biological Treatment | Carbon Adsorption | Chemical Precipitation | Chemical Oxidation | | Chemical Reduction | Ion Exchange | Reverse Osmosis | Stripping | Wet Oxidation |
|---|---|---|---|---|---|---|---|---|---|---|
| | | | | Alkaline Chlorination | Ozonation | | | | | |
| 1. Alcohols | E | V | | N | G,E | N | | V | | |
| 2. Aliphatics | V | V | | N | P | N | | V | | |
| 3. Amines | V | V | | N | N | N | | | | |
| 4. Aromatics | V | G,E | F | N | F,G | N | | V | | |
| 5. Ethers | G | V | | N | | N | | | | |
| 6. Halocarbons | P | G,E | | N | F,G | N | | | | |
| 7. Metals | P,F | N,P | E | N | | G | E | E | N | |
| 8. Miscellaneous: | | | | | | | | | | |
| Ammonia | G,E | N | N | N | | N | G | | G | |
| Cyanide | F,G | N | N | E | E | N | | | N | |
| TDS | N | N | N | N | N | N | E | E | N | N |
| 9. PCB | N | E | | N | | N | | | | |
| 10. Pesticides | N,P | E | | N | E | N | | E | | |
| 11. Phenols | G | E | | N | E | N | | V | | |
| 12. Phthalates | G | E | G | N | | N | | | | |
| 13. Polynuclear Aromatics | N,P | G,E | R | N | G | N | | | | |

(continued)

Table 5-1 (continued)

Key for Symbols:

E - Excellent performance likely
G - Good performance likely
F - Fair performance likely
P - Poor performance likely
R - Reported to be removed
N - Not Applicable
V - Variable performance reported for different compounds in the class

A blank indicates that no data are available to judge performance; it does not necessarily indicate that the process is not applicable

Note: Use of two symbols indicates differing reports of performance for different compounds in the class.

Source: Shuckrow, A. J., A. P. Pajak, and J. W. Osheka. Concentration Technologies For Hazardous Aqueous Waste Treatment. EPA-600/2-81-019. U.S. Environmental Protection Agency, Cincinnati, Ohio, February, 1981.

ess train. Because much of the data used to prepare Table 5-1 and Appendix E are from laboratory scale studies using various wastewaters ranging from solutions of pure compounds to industrial wastewaters, extrapolation from these studies to full scale leachate treatment operations is risky. Preferably the basis for process design, at a minimum, should rely on laboratory scale treatability studies using the actual leachate or a closely similar wastewater. Although all compounds in these chemical classes are not labeled as toxic or hazardous; it is expected that many of them will be present in hazardous waste leachates. Thus, treatment processes must be designed to accommodate those compounds as well because they will impact overall treatment process performance and often will be limited in permissible discharge amount by NPDES permits.

As a prelude to formulating treatment trains capable of addressing the complex chemical matrix of hazardous waste leachate, details relating to process configurations, applications, design concerns, and pre- and post-treatment requirements of Category 1 and 2 unit processes are discussed in Section 6.5. In Section 6.6, unit processes are arranged into example process trains for several selected leachate situations.

## 5.5 BY-PRODUCT CONSIDERATIONS

In addition to a treated effluent, most leachate treatment processes will generate sludges, brines, gaseous emissions, or other by-product streams which often will contain hazardous constituents and thus, must be managed as hazardous waste. Methods for treatment and ultimate disposal are the same as those for hazardous wastes except that options probably will be more limited because of the expected mixed composition of hazardous waste leachate treatment by-product streams.

The objectives of this subsection are to identify by-products generated by the treatment processes described in Section 5.3, to identify alternative management methods, and to list factors affecting selection of a management method.

Table 5-2 lists by-products expected from the treatment processes described in Section 5.3. For purposes of this manual, the by-product streams have been divided into two categories: residuals (e.g., brines, concentrates, sludges, and discarded materials) and gaseous emissions.

Methods for dealing with these two classifications are substantially different. Residues may be managed using most of the techniques available for hazardous wastes; thus, on or off-site measures may be employed. For gaseous emissions there are three basic control measures. One is to attempt to control or treat the emission using air pollution control technologies, e.g., scrubbers, precipitators, chemical or thermal oxidation, or gas

TABLE 5-2 LEACHATE TREATMENT PROCESS BY-PRODUCT STREAMS

| TREATMENT PROCESS | RESIDUALS GENERATED | GASEOUS EMISSIONS |
|---|---|---|
| I. Biological treatment | | |
| A. Aerobic | | |
| 1. activated sludge | Excess biological sludge must be removed - amount of sludge varies with the process configuration. | Stripping of volatile compounds during aeration process - use of pure oxygen process may reduce air emissions. |
| 2. lagoons | Settled solids will accumulate on lagoon bottom, clean-out frequency depends on performance requirements and lagoon capacity. | Stripping of volatile compounds if mechanical or diffused aeration is used. |
| 3. trickling filter | Excess biological sludge must be removed - plastic and high rate filters generate more sludge than low rate filters. | The most volatile compounds may be stripped at the point of waste application; if improperly operated, odor problems may occur. |

(continued)

TABLE 5-2 (continued)

| TREATMENT PROCESS | RESIDUALS GENERATED | GASEOUS EMISSIONS |
|---|---|---|
| B. Anaerobic | | |
| 1. filters | Some anoxic residue may be generated; less sludge than aerobic process. | Properly operating system will generate gas composed of methane, carbon dioxide and water vapor; highly volatile compounds also may be present. |
| 2. lagoons | Settled sludge will accumulate in lagoon; need for clean-out depends on lagoon performance and capacity. | May create odor problem - some opportunity for stripping of volatile compounds. |
| II. Carbon adsorption | | |
| A. Granular carbon | Spent carbon - may be regenerated and reused; performance may decline with continued reuse and blow-down of some portion of the spent carbon may be required. | Emission problems generally associated with spent carbon handling and regeneration operations. |

(continued)

TABLE 5-2 (continued)

| TREATMENT PROCESS | RESIDUALS GENERATED | GASEOUS EMISSIONS |
|---|---|---|
| B. Powdered carbon (PAC) | When used with activated sludge process a residue containing excess biological sludge and PAC results - may be regenerated thermally or by wet oxidation with some wasting to prevent build-up of inerts. If not regenerated, sludge disposal is necessary. | Same as for the activated sludge process. |
| III. Catalysis | Depends on the process in which the catalyst is used. | |
| IV. Chemical oxidation | Small amount of residue may be formed during the oxidation process. Residue likely to be less hazardous than raw waste. | During the rapid mix phase stripping may occur or gaseous reaction products could be released. |
| | Use of chlorine may result in formation of chlorinated organics in liquid product stream. Ozone and hydrogen peroxide add no harmful species to the effluent. | Gaseous chlorine and ozone are toxic; however, these should not escape from the system in appreciable quantity. |

(continued)

TABLE 5-2 (continued)

| TREATMENT PROCESS | RESIDUALS GENERATED | GASEOUS EMISSIONS |
|---|---|---|
| V. Chemical precipitation | Relatively large amounts of inorganic sludge will be generated by lime, ferric chloride, and alum coagulants. Polymer addition would increase sludge amounts. | Stripping may occur during the rapid mix or flocculation phases. |
| VI. Chemical reduction | As with chemical oxidation, small amounts of residue may be formed. Some metal ions or sulfate from the reducing agents may carry over in the liquid effluent. | Emissions may occur during rapid mixing. |
| VII. Crystallization | Brines high in organics or inorganics will be formed. | Emissions could include lost refrigerant, non-condensable compounds, and water vapor. |
| VIII. Density separation | Either a sludge or a floating scum is produced by these processes. The quantity produced depends on the suspended solids content of the raw wastewater and the use of coagulant chemicals. | Gravity separation is not likely to generate emissions. Dissolved air flotation may cause stripping of volatile compounds. |

(continued)

TABLE 5-2 (continued)

| TREATMENT PROCESS | RESIDUALS GENERATED | GASEOUS EMISSIONS |
|---|---|---|
| IX. Distillation | Still bottoms consisting of tars and sludges will be laden with nonvolatile organics. Condensed overhead stream also could contain volatile organics. | No emissions if the overhead stream is condensed trapping volatiles in a liquid phase. |
| X. Dialysis/ Electrodialysis | No solid residue is formed; however, the original pollutants will be present in different concentrations in the two product streams. | Venting of gases produced at electrodialysis electrodes causes emissions. |
| XI. Evaporation | Similar to distillation with evaporator liquor laden with less volatile organics and condensed vapor rich in volatile compounds. | Evaporation vapors could contain volatile compounds; these can be condensed and trapped in liquid phase. |
| XII. Filtration (granular media for aqueous waste) | In the case of granular media filters, the major residue is suspended solids trapped by the filter and removed by backwashing. | Emissions generally should not be a problem. If anaerobic conditions are allowed to occur in granular media filter, anoxic odors could occur. During backwashing, turbulence may induce some stripping of volatiles. |

(continued)

TABLE 5-2 (continued)

| | TREATMENT PROCESS | RESIDUALS GENERATED | GASEOUS EMISSIONS |
|---|---|---|---|
| XIII. | Flocculation | See discussion of chemical precipitation. | |
| XIV. | Ion exchange | Residuals include the:<br>1. concentrated regenerant stream.<br>2. spent ion exchange materials.<br>Unless spent exchange materials are regenerated both types of residues could contain the original hazardous pollutants. | Emissions should not occur. |
| XV. | Resin adsorption | One residue will be spent resin which can no longer be used effectively.<br><br>Another will be solutes extracted from the sorbent. These solutes may be separated from the regenerant solvent or discarded with the used regenerant solution.<br><br>Waters used to rinse regenerant solution from resin also require attention. | Emission problems generally associated with spent resin handling or regeneration operations.<br><br>Steam regeneration and distillation of solvents used for solvent regeneration are principal emission sources. |

(continued)

TABLE 5-2 (continued)

| | TREATMENT PROCESS | RESIDUALS GENERATED | GASEOUS EMISSIONS |
|---|---|---|---|
| XVI. | Reverse osmosis | The primary residual will be a brine stream containing the concentrated pollutants.<br><br>Other residues include solutions which may be used to wash or maintain the membranes and degraded or fouled membranes. These all could contain the original pollutants. | Emissions should not occur. |
| XVII. | Solvent extraction | No solid residuals are generated by the process. Spent solvent, solvent containing the solutes, or solutes alone will have to be disposed of at some time during process operation. | Gaseous emissions from the extraction process should be minimal. However, processes to remove solute from solvent or recover solvent from the treated water could produce emissions of either volatile solutes or volatile solvent since these procedures usually employ stripping or distillation. |
| XVIII. | Stripping | | |
| A. | Air | No solid residue is generated unless chemicals are added to adjust operating conditions. Use of lime can result in substantial quantities of sludge. | Volatile compounds will be contained in stripper emission by design. |

(continued)

TABLE 5-2 (continued)

| TREATMENT PROCESS | RESIDUALS GENERATED | GASEOUS EMISSIONS |
|---|---|---|
| B. Steam | No solid residues are formed; however, stripper bottoms will contain concentrated non-volatile organics and cannot be discharged directly. | No emissions occur if stripped volatile compounds are trapped in the condensed overhead stream. |
| XIX. Ultrafiltration | Same as reported for reverse osmosis. | |
| XX. Wet oxidation | Residues are not generated by the process, but solids present in the raw wastewater could remain after treatment. These solids are likely to be more inert than those originally present. | Vapors may be released when the high pressure and temperature operating conditions are removed and the waste is exposed to atmospheric conditions. |

phase adsorbents. These measures may con
in many cases generate by-product waste s

A second approach is to use a process
ate an air emission or which generates an
nitude or severity. For example, gravity
likely to strip volatile compounds than d
the same applies for trickling filtration
tion activated sludge. Process selection
upon leachate quality, treatment goals, a
individual unit processes in the process

The third alternative which may be po
ces is a "do nothing" approach which allo
that concentrations of specific pollutant
sions are within acceptable limits (for m
pollutants such limits have not been defi
quate dilution of the emission may be a f

As previously stated, residues can be
manner as other liquid and solid hazardou
following disposal techniques may be used

- hazardous waste landfill,
- hazardous waste treatment facilit
- hazardous waste incinerator,
- deep well injection, or
- land application.

Whether the residue has to be processed be
upon the residue characteristics, the disp
nomics of the situation. For example, if
facility is located at a hazardous waste l
possible to pump or otherwise convey a slu
the form it is generated and thus avoid
or chemical stabilization. However, thi
specific and it is not possible to recom
ment technique for every residue listed
possible to group the residues in Table
broad categories, subsequently to identi
ment approaches for each category.

| Residue Category | Exam |
|---|---|
| 1. Liquids (brines) | Inorgani centrate tion pro regenera |

phase adsorbents. These measures may control the emission, but in many cases generate by-product waste streams.

A second approach is to use a process which does not generate an air emission or which generates an emission of less magnitude or severity. For example, gravity sedimentation is less likely to strip volatile compounds than dissolved air flotation; the same applies for trickling filtration versus diffused aeration activated sludge. Process selection, however, also depends upon leachate quality, treatment goals, and capabilities of the individual unit processes in the process train.

The third alternative which may be possible in some instances is a "do nothing" approach which allows emissions provided that concentrations of specific pollutants in the gaseous emissions are within acceptable limits (for many hazardous or toxic pollutants such limits have not been defined). Ensuring adequate dilution of the emission may be a factor in this approach.

As previously stated, residues can be managed in the same manner as other liquid and solid hazardous wastes. That is, the following disposal techniques may be used:

- hazardous waste landfill,
- hazardous waste treatment facility,
- hazardous waste incinerator,
- deep well injection, or
- land application.

Whether the residue has to be processed before disposal depends upon the residue characteristics, the disposal option, and economics of the situation. For example, if the leachate treatment facility is located at a hazardous waste landfill, it may be possible to pump or otherwise convey a sludge to the landfill in the form it is generated and thus avoid the costs of dewatering or chemical stabilization. However, this decision is very site specific and it is not possible to recommend a specific management technique for every residue listed in Table 5-2. It is possible to group the residues in Table 5-2 into the following broad categories, subsequently to identify alternative management approaches for each category.

| Residue Category | Examples |
|---|---|
| 1. Liquids (brines) | Inorganic aqueous streams: concentrates from membrane separation processes, ion exchange regenerant streams |

| | |
|---|---|
| 2. Liquids (organic laden) | Condensates from stripping, distillation, and evaporation operations; spent solvents from extraction and regeneration processes; concentrate from ultrafiltration |
| 3. Sludges (inorganic) | Precipitates from chemical oxidation, reduction and precipitation processes; backwash from granular media filtration processes; spent ion exchange resins |
| 4. Sludges (organic) | Excess biological treatment sludges, still bottoms from distillation and evaporation processes, spent adsorbents such as granular and powdered active carbon and resins which cannot be regenerated, scum from dissolved air flotation (may also be inorganic in nature) |
| 5. Reusable materials | Ion exchange resins, activated carbon, adsorption resins |
| 6. Other | Discarded or fouled membranes, contaminated packings from column operations |

Processing and disposal alternatives for each of these categories are shown in Table 5-3. Engineering judgment was used to attempt to differentiate in this table between a primary or preferred approach (designated with a P) and other approaches which should be considered (designated S). Blanks indicate that the alternative probably does not apply to the residue category; however, there may be exceptions.

Factors to be considered when selecting a residue management alternative are the same as those considered when evaluating on or off-site leachate treatment and disposal alternatives as discussed in Section 4.

## 5.6 TREATMENT PROCESS COSTS

Although many of the unit processes described in Section 5.3 have potential application to treatment of hazardous waste leachate, most of them have never been used for this purpose.

TABLE 5-3. RESIDUE MANAGEMENT ALTERNATIVES

| Disposal Alternative | Alternatives for Processing Before Disposal | RESIDUE CATEGORY: Brines | Organic Liquids | Inorganic Sludges | Organic Sludges | Reuseables | Other |
|---|---|---|---|---|---|---|---|
| Landfill | None | P | P | P | P | | P |
| | Dewater | S | S | S | S | | |
| | Stabilize | P | | P | S | | |
| Incinerate | None | | P | | P | | P |
| | Dewater | | S | | S | | |
| Deep well injection | None | P | S | | | | |
| Land Treatment | None | | P | S | P | | |
| | Dewater | | | | | | |
| Hazardous Waste Treatment Facility | None | P | P | S | S | | |
| | Dewater | S | S | S | S | | |
| Reuse | Regenerate | | | | | P | |

P - Primary or preferred approach

S - Approach which should be considered

Blank indicates alternative probably not applicable to residue category

Therefore, no historical cost data exist on the use of these processes for hazardous waste leachate treatment. Consequently, one must rely on information based upon municipal and industrial water and wastewater treatment experience to develop cost estimates. Such information, however, should not be applied directly in developing cost estimates for hazardous waste leachate treatment. Nevertheless, it reflects the best available information and with care can be used to make approximate cost comparisons among leachate treatment alternatives. Municipal and industrial treatment cost data should not be used to prepare absolute site specific cost estimates for any particular process. Once a process has been selected and operating conditions defined, detailed cost estimates should be prepared using standard engineering practices.

Before preparing cost estimates for purposes of making comparisons, the user should be aware of the following constraints to applying available municipal and industrial treatment cost data to leachate situations:

1. Cost data for many processes are presented as a function of flow rate with flow rates typically ranging from 0.1 or 1.0 to 100 MGD (378 to 378,000 $m^3$/d). Leachate flow rates are expected to be less than 0.1 MGD in most cases. Consequently, extrapolation must be made to the correct size range. The reader is cautioned that a good understanding of the assumptions, formulae, constants, and exponentials used to prepare the original cost curves is necessary prior to making such extrapolations.

2. Costs for many processes have been derived from treatment of wastewater matrices less complicated than hazardous waste leachate and containing conventional rather than hazardous, toxic, or priority pollutants. Consequently, the levels of treatment provided may be adequate only for the conventional pollutants. For example, ozonation for municipal wastewater disinfection requires smaller ozone doses and consequently smaller ozone generators and lower capital costs than for oxidation of certain organic compounds. Also, phenomena like competitive adsorption may not have been recognized and taken into account in sizing an adsorption process to handle a given flow rate.

3. Costs may be presented as a function of loading of a certain wastewater constituent, e.g., BOD or COD. These may not be meaningful parameters to size and cost a hazardous waste leachate treatment process.

With these cautions in mind, the reader is referred to the following references for cost information which could be of assistance in evaluating leachate treatment alternatives:

- Treatability Manual, Volume IV, Cost Estimating (5)
- Estimating Water Treatment Costs, Volume 3, Cost Curves Applicable to 2500 gpd to 1 mgd Treatment Plants (6)

These documents contain capital, and operation and maintenance cost data on municipal and industrial applications of many of the unit processes described in Section 5.3 as well as ancillary processes such as pumping, pretreatment, and sludge handling. It is expected that for some processes, the capital cost curves would be more usable than operation and maintenance (O&M) cost data. This is because O&M cost components such as chemicals, materials, power, and even labor are more likely to be influenced by wastewater composition and treatment goals. A good example is granular carbon adsorption where contactor size and ancillary equipment is relatively independent of wastewater characteristics but the amount of carbon used is directly dependent on wastewater composition and treatment objectives. Ozonation, however, provides an exception to this generalization because even though the ozone dosage requirement is directly dependent on wastewater composition and treatment goals it also influences capital costs for ozone generators. Such relationships should be kept in mind when using the referenced cost data to compare leachate treatment alternatives.

In general, it is believed that leachate treatment costs will be higher than for comparable municipal and industrial processes.

## 5.7 REFERENCES


1. Shuckrow, A. J., A. P. Pajak, and J. W. Osheka. Concentration Technologies For Hazardous Aqueous Waste Treatment. EPA Contract No. 68-03-2766. U.S. Environmental Protection Agency, Cincinnati, Ohio, 1980. 343 pp.

2. Baillod, G. R., R. A. Lamparter, and D. G. Leddy. Wet Oxidation of Toxic Organic Substances. Michigan Technological University, College of Engineering, Houghton, Michigan.

3. U. S. Environmental Protection Agency. Treatability Manual, Volume III, Technologies for Control/Removal of Pollutants. EPA-600/8-80-042 C, U. S. Environmental Protection Agency, Washington, D. C., 1980.

4. U. S. Environmental Protection Agency. Treatability Manual, Volume I, Treatability Data. EPA-600/8-80-042 a, U. S. Environmental Protection Agency, Washington, D. C., 1980.

5. U.S. Environmental Protection Agency. Treatability Manual, Volume IV, Cost Estimating. EPA-600/8-80-042d, U.S. Environmental Protection Agency,, Washington, D.C., 1980.

6. Hansen, S. P., R. C. Gumerman, and R. L. Culp. Estimating Water Treatment Costs, Volume 3, Cost Curves Applicable to 2500 gpd to 1 mgd Treatment Plants. EPA - 600/2-79-162c, U.S Environmental Protection Agency, Cincinnati, Ohio, 1979. 196 pp.

# SECTION 6

# LEACHATE TREATMENT PROCESS SELECTION

## 6.1 GENERAL DISCUSSION

Selection of a leachate treatment process is not a simple task, especially in view of the fact that there is little past experience in the area of hazardous waste leachate treatment and if the facility is not yet in operation, the quality and quantity of the leachate to be treated must be estimated. Numerous factors must be weighed and tradeoffs made in the course of selecting a leachate treatment process. Important factors which must be considered include:

1. leachate characteristics;
2. discharge alternatives;
3. treatment objectives (performance requirements);
4. nature of disposal site operation and resulting impact on leachate;
5. costs of various alternatives;
6. status of the disposal facility (new or existing); and
7. post-closure care considerations.

The intent of this section is to provide the reader with an understanding of how each of the above factors influences treatment process selection. Moreover, an approach which can be followed to systematically address each factor is suggested. Finally, selected hypothetical and actual leachate situations are used to provide examples of use of this approach to select treatment processes.

Requirements for hazardous waste leachate treatment are expected to apply to both new and existing disposal sites. However, approaches to selection of leachate treatment systems for these two situations probably will differ. Each situation is addressed subsequently in this section.

Although post-closure care considerations have not been dealt with explicitly in this section, such considerations should be taken into account in final treatment process selection. That is, the resources necessary to maintain treatment system operations subsequent to site closure must be factored into the treatment system selection process and into the long term financial planning for the site. In addition to resource considerations, post-closure concerns which may impact treatment system selection relate to changes in flow and composition of leachate as a result of site closure.

## 6.2 PERFORMANCE REQUIREMENTS

As noted in Section 4.4, there are several options for treatment of leachate and disposal of treated effluent:

1. complete treatment with direct discharge to surface waters;

2. complete treatment with discharge to groundwater; or

3. pretreatment with discharge to a POTW or other facility for additional treatment.

Obviously, the required degree of treatment differs among the options. For option 3, the nature and capabilities of subsequent treatment will dictate the required degree of pretreatment. Currently, pretreatment standards for discharge to POTWs exist for some substances in many municipalities. Moreover, regulations require development of new pretreatment standards for most POTWs for substances such as metals, phenol, and cyanide. That is, limits exist but are being upgraded. Therefore, leachate treatment system performance requirements will be defined, at least in part, by local pretreatment requirements. Pretreatment requirements for discharge to treatment systems other than POTWs will be dictated by the nature of the downstream system and thus will be highly site specific. Therefore, leachate treatment system performance requirements would have to be developed on a case-by-case basis. In any event, pretreatment would represent a simplified case of complete treatment. That is, the technologies would be the same but the required degree of treatment would be less.

Options 1 and 2 also may differ in the degree of treatment required. However, at this time there are no guidelines which establish discharge limitations or acceptable ground or surface water concentrations for most of the pollutants identified in Sections 261.33(e), 261.33(f) and Appendix VIII of RCRA or Section 311 of the Clean Water Act. Consequently, specific limitations cannot be used to derive the required levels of per-

formance. Moreover, it is likely that leachate treatment system performance objectives will encompass concerns broader than RCRA alone, e.g., NPDES.

Definition of treatment system performance objectives is vital to selection of an appropriate treatment technology. Therefore, several possible approaches to establishing performance objectives are discussed below. These approaches are not intended to have any regulatory significance, but could be used in some combination to guide selection of treatment system goals until more comprehensive guidelines are developed.

In the case of surface water discharges, stream water quality standards, including specific pollutant water quality criteria, must be considered when defining the required level of treatment. Water quality criteria have been developed by states for numerous conventional and non-conventional pollutants. State standards vary and the pertinent agency must be contacted to obtain standards for the stream of concern. Some multiple of published water quality criteria could be used to establish treatment objectives. The multiple should be established on the basis of receiving stream flow taking dilution into account.

Although water quality standards do not exist for many of the compounds likely to be of concern in hazardous waste leachate, recommended water quality criteria for 64 of the 65 priority pollutants recently have been published by the Environmental Protection Agency(1). However, because criteria for these pollutants still must be developed and adopted by the states, uniform treatment requirements even for these 64 pollutants do not exist.

Published industrial effluent limitation guidelines also can be useful in formulating hazardous waste leachate treatment goals. Specific numerical effluent criteria have been established for some constituents in certain industrial waste categories based upon state-of-the-art technology capabilities. Criteria generally are available from this source on pH, BOD, COD, SS, oil and grease, phenol, cyanide, and several heavy metals.

Primary drinking water standards also can be used as a reference point in setting leachate treatment objectives. Once again, a multiplier could be applied to these water quality based criteria to establish effluent objectives. This source may prove useful for certain metals and several pesticides.

Discharges to groundwater can take the form of land application, seepage pits, or disposal wells. At this time no uniform approach has been applied to define the required degree of treatment before groundwater discharge. With adoption of a national groundwater protection strategy, criteria to protect

groundwater quality may evolve. A strategy has been proposed by EPA (2) but adoption and implementation by the states still is required. In this draft strategy, the following three classifications of groundwater resources are identified:

- first class - serves a highly valuable human use or ecological function warranting the most stringent protection controls,
- second class - must be protected to insure use as a drinking water source, and
- third class - limited or defined contamination would be allowed for some types of contaminants.

Implementation of this strategy most probably will influence leachate treatment requirements as well as hazardous waste disposal facility siting. It is possible that the recently proposed water quality criteria for 64 of the priority pollutants also could be related to groundwater quality using the "protection of human health" criteria. However, it should be noted that for many of these 64 pollutants three criteria are given representing incremental cancer risks, but no "acceptable risk level" is given.

In summary, the following sources may be used to guide development of leachate treatment goals:

1. existing surface water quality standards prepared by the individual state agencies,
2. water quality criteria for 64 priority pollutants recently proposed by EPA (1),
3. industrial wastewater effluent guideline documents which define state-of-the-art performance levels for various technologies and wastewater constituents,
4. interim primary drinking water standards, and
5. proposed groundwater protection strategy issued by EPA (2).

However, in attempting to use these various sources for this purpose, care must be taken to understand the intent of the particular criteria/standard and the basis for its development. Such understanding is crucial to the derivation of reasonable treatment goals from sources originally developed for other purposes.

## 6.3 TREATMENT FACILITY STAGING

During the life of a disposal operation and even after closure, the flow and composition of leachate from the site are likely to change. These changes can occur because of:

1. changes in hazardous wastes being disposed of at the site;

2. on-going physical, chemical, and biological reactions within the disposal site; and

3. ultimate sealing of the site at the time of closure which further reduces entry of extraneous water.

Thus, the leachate treatment facility must be capable of responding to these changes. This can be done either by preparing an initial design which includes processes capable of responding to all envisioned changes or by staging. Staging would involve a design which facilitates adding or deleting new treatment processes or changing capacity of existing processes as future conditions warrant.

From both technical and economic perspectives, staging warrants detailed consideration during both disposal facility and leachate treatment facility design. A major advantage of staging would be optimum utilization of the technologies judged to be most applicable to the leachates produced at different phases in the life of the disposal site. A major disadvantage, however, is the need to anticipate when a change will occur and to respond as necessary. In some cases it may not be sufficient to recognize that a change has occurred and then modify the leachate treatment process after the fact.

An evaluation of the need to modify the leachate treatment process could be triggered by either:

1. the results from routine monitoring of leachate characteristics and leachate treatment process performance, or

2. the decision to accept a different hazardous waste at the disposal facility.

If a change is needed in unit processes, process size, or operational procedures, this can be determined based upon the expected magnitude and duration of change in the leachate.

In the case of a new disposal operation where a leachate has not yet been generated and treatability studies cannot be conducted using actual leachate samples, the initial leachate

treatment facility will have to be designed from leachate quantity and composition projections made on the basis of types of wastes to be handled, and site construction and operational procedures. However, because performance of the leachate treatment system can, at best, only be estimated on the basis of available data, the system should be designed and constructed in such a way that processes can be added or deleted as necessary to respond to leachate characteristics and to meet performance requirements.

One aspect of staging which should be considered for new facilities is interim storage and/or leachate recycle to the disposal site. The feasibility of these approaches will be highly site specific and in most cases can only be considered as interim. However, if some combination of storage and recycle is feasible early in the life of the disposal site operation, this approach may provide sufficient time for the conduct of treatability studies with the actual leachate. Consequently, treatment process design could be accomplished on a firmer basis. Use of this approach, however, must be evaluated on a case-by-case basis.

The use of mobile or temporary treatment facilities early in the life of a disposal site prior to construction of a permanent facility also could be considered.

## 6.4 TREATMENT PROCESS SELECTION METHODOLOGY

It is not possible to provide a prescriptive, step-by-step guide for selection of a hazardous waste leachate treatment technology. This is because site specific factors will have a significant impact on the selection procedure. Moreover, hazardous waste leachate treatment is an emerging area still in its infancy. Therefore, this section addresses factors which should be considered and suggests a generalized methodology which can be applied to selection of a leachate treatment process. Cautions and recommendations pertaining to various steps in the methodology also are provided.

If possible, selection of a process to treat hazardous waste leachate should be based upon treatability studies (laboratory or pilot scale) using the actual leachate. This is recommended for several reasons:

1. Published hazardous waste leachate treatment performance data are rare. In the absence of treatability studies, inferences must be drawn from other laboratory experimental studies, and industrial and municipal water and wastewater treatment experience.

2. Lacking previous experience and/or treatability data, there is no guarantee that high levels of treatment can be achieved.

3. It is likely that a combination of several unit processes will be needed to deal with the complex leachate matrix. Arriving at the optimum system is unlikely without treatability studies.

4. The complex leachate matrix may not behave like other wastewaters thus affecting design and operating criteria (e.g., chemical dosage requirements), and invalidating extrapolations from other experiences.

5. Capital investment, and especially operation and maintenance costs are likely to be greater per unit volume treated than for municipal or industrial wastewater. However, costs will be difficult to estimate without treatment experience. Investment in a costly, unproven system that may not meet the required treatment objectives is imprudent.

In spite of these considerations, at new disposal sites or existing sites where leachate has not appeared or its quality is expected to change greatly, treatability studies may not be possible. Thus, a more theoretical approach (at least to conceptual design of a treatment system) with greater dependency on published data must be taken.

A general methodology which can be used for selection of a leachate treatment process is shown in Figure 6-1. This methodology revolves around the question of existence of a leachate. The left side of the flow chart applies to cases where a leachate exists and can reasonably be used in treatability studies. The right side addresses the case where leachate treatability studies cannot be conducted. This suggested methodology is discussed subsequently.

Aside from the availability of leachate for use in treatability studies, several key questions must be answered as part of the leachate treatment technology selection process. Among these are:

1. Does the leachate need to be considered a hazardous waste?

2. What are the treated effluent discharge options and the corresponding performance or discharge limitations?

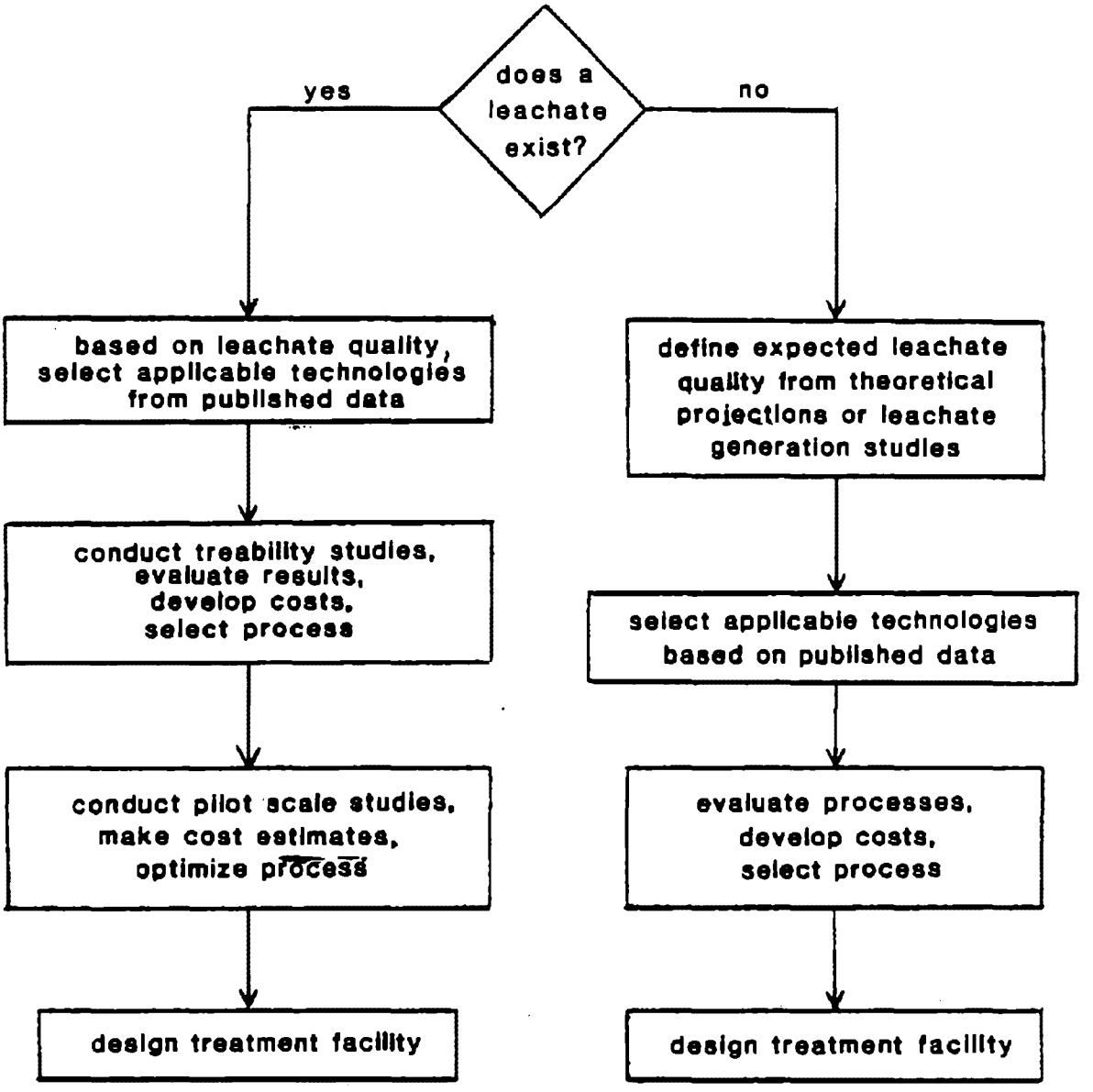


Figure 6-1. Methodology to select leachate treatment process.

3. What pollutants are present in the leachate and at what concentrations?

4. Are toxic or refractory compounds present?

5. What is the leachate flow rate; how will it vary with time (diurnal, seasonal, long term)?

6. Are there any other aqueous wastes generated at the site and should they be combined with the leachate for treatment?

7. Will the leachate quality or quantity change (could be a function of disposal site operation) and does the leachate treatment process need to be able to respond to such changes and in what time-frame?

8. How much land is available for the leachate treatment facility and are there any special constraints to construction?

9. Should leachates from different areas of the disposal site be combined or segregated for treatment? (Note that this will affect site and leachate collection system design.)

10. How will leachate treatment residues be managed?

11. What is required to support the leachate treatment operation, e.g., analytical testing, operations personnel?

12. Will spilled material get into the leachate treatment system?

13. What skills and resources will be needed for post-closure operation?

The leachate treatment system design process must address all these issues.

### 6.4.1 Disposal Site with Existing Leachate

Where a leachate exists, a three-tiered selection methodology process is shown in Figure 6-1. Initially, published information (e.g., discussions given in Section 5.3 and 5.4, and the treatability data given in Section 5.2 and Appendix E) should be used to identify processes that have been reported to be capable of treating the types of constituents present in the leachate. The objective should be to focus subsequent efforts on the most promising processes.

At the second level, these processes should be studied at laboratory scale individually and, if necessary, in combinations. Experimental studies will further screen out unsuccessful processes, identify viable combinations, enable development of "first cut" design criteria, identify by-products of concern, and facilitate cost projections. Depending upon the results of this step and the reliability of laboratory scale data, a pilot scale program may be warranted to develop detailed design information. The possibility of designing the pilot scale system to serve as the first stage of the full scale system should be given consideration.

The time required and costs associated with conduct of this three-tiered program will depend upon the number of processes examined, the ease with which the leachate can be treated, and the intensity of the effort. Physical and chemical processes generally can be studied in less time than biological processes because of acclimation or stabilization requirements usually associated with the latter process type. Other considerations in designing and conducting treatability studies include:

- obtaining representative leachate samples;
- quantities of leachate required;
- methods for collecting, handling, and transporting leachate to avoid or minimize changes which would introduce experimental error or endanger personnel, e.g., volatilization of leachate constituents;
- use of batch and continuous flow treatment processes;
- parameters used to monitor process performance because of both the considerable costs which could be incurred by analytical testing and the need for rapid data turn-around to enable timely judgments; and
- disposal of wastes (liquids, residues, gaseous emissions) generated in the treatability studies.

### 6.4.2 Disposal Site Without Existing Leachate

If a leachate does not exist or if its composition is expected to change greatly, the first major step is to determine what the leachate composition is expected to be. Because disposal site design and permit acquisition requires knowledge of what wastes will be handled at the site, incoming waste composition data probably will be available. However, it still will be necessary to project which waste consituents may appear in the leachate and at what concentrations. Moreover, because treatment facility design probably will be based on a worst case rather than average or optimum condition, a projection of the

worst condition must be made based upon anticipated chemical reactions, physical constants for the waste constituents, a water balance for the site, and water and pollutant migration rate information.

For a landfill disposal operation, a second approach for determining leachate characteristics would be to simulate leachate generation. Various simulation techniques are available depending on the desired degree of correlation with the actual site. However, a one-for-one correlation is unlikely and cost increases as correlation improves. Leachate generation tests could range from "extraction procedure" type tests to larger scale lysimeter studies to measure percolation and constituents removed in the drainage. Generation tests could be conducted using individual raw wastes or they could be conducted under conditions better representing site operation by mixing, segregating, stabilizing, compacting, or sealing the wastes as they would be at the site. The major benefit of the larger scale, more time-consuming lysimeter test may not be the development of leachate composition data but the generation of enough leachate to enable conduct of small scale treatability studies. However, before adopting such an approach, one should be assured that good correlation with actual site conditions can be achieved. Otherwise, treatability study data may be little more useful than published data and should be used with a similar amount of caution.

In that regard, published data can be used with caution to gain insight into the types of compounds likely to migrate and appear in leachate and to a lesser extent, concentration ranges. The data contained in Appendix A and summarized in Table 3-1 could serve as a starting point. As more data on hazardous waste leachate composition become available, the utility of making projections based upon experience at other sites may be improved.

In the future, mathematical modeling, may be a viable alternative for projecting leachate characteristics. However, selection of input values which correlate with site conditions will be difficult.

Once leachate characteristics are projected, promising technologies should be identified on the basis of published data (similar to the first step or the left side of Figure 6-1). Detailed "desk-top" analyses then can be conducted to evaluate and select the process. These analyses could be aided by companies marketing pertinent technologies if unpublished in-house experiences are provided to supplement available data.

In cases where treatment process design is based on the "desk-top" approach, consideration should be given to contingency plans for leachate treatment and disposal in the event

that the original design does not perform as required. The feasibility of adopting an interim measure such as leachate storage and/or recycle until the design can be confirmed by actual treatability studies as discussed earlier in this section also should be considered.

## 6.5 CONSIDERATIONS RELATING TO PROCESS TRAIN FORMULATION

Details relating to process configurations, applications, design concerns, and pre- and post-treatment requirements to assure proper performance are discussed below for those processes identified in Section 5.4 as being most applicable for leachate treatment. These considerations should be taken into account when arranging unit processes into treatment trains.

### 6.5.1 Biological Treatment

Biological treatment is expected to offer the most cost-effective approach to removal of organic matter, particularly biodegradable substances which are not amenable to sorption processes. The major problem associated with biological treatment is the potential presence of toxic organics and heavy metals which may interfere with metabolic processes and render this treatment approach ineffective. There are several categories of biological treatment processes including variations within these categories which overcome toxicity problems to some extent. In addition, pretreatment or the addition of powdered activated carbon often can be applied successfully to overcome toxicity problems. For example, toxic heavy metals may be reduced below inhibiting concentrations by chemical precipitation using lime, alum, or iron salts, prior to biological treatment. Carbon sorption either by packed bed pretreatment or PAC addition to the biological treatment unit can be quite effective in dealing with organic toxic substances. Nutrient addition (e.g., phosphorus and/or nitrogen) probably will be required in many instances to support biological growth. Neutralization also may be required if the pH is substantially different from 7.

Biological treatments which can be used include aerobic processes such as activated sludge, trickling filters and aerated lagoons; and anaerobic processes such as lagoons and anaerobic filters. Each is discussed below.

Of the various activated sludge processes, completely mixed, extended aeration, and contact stabilization are used most often. The completely mixed configurations are more tolerant of toxic substances than plug flow schemes. The impact of toxic substances in the wastewater is reduced because complete mixing in the aeration unit reduces the concentration of the toxic compound by dilution and distributes the load to a greater quantity of biomass. Non-biodegradable substances may pose more

of a problem than biodegradable toxics especially if sorbed by the biological sludge where they may concentrate over a period of time and interfere with cell metabolism.

Sludge produced in biological waste treatment may be a hazardous waste itself due to the sorption and concentration of toxic substances contained in the wastewater. The quantity of biological sludge produced normally is governed by hydraulic detention time and sludge age. The conventional approach focuses on maximum sludge production consistent with the desired effluent quality.

On the other hand, extended aeration minimizes sludge production through use of long hydraulic detention times. Extended aeration typically is used in small operations since the small sludge handling requirements minimize the amount of manpower needed for operation (manpower costs are more significant than aeration costs for small units).

An additional potential problem associated with aerated systems is the stripping of volatile compounds. While this may serve as a removal mechanism, air pollution and personnel safety problems also may arise. Methods to control these emissions are limited. Aside from using a process where stripping is less likely (e.g., trickling filters or an anaerobic process), gas phase adsorption may be possible using carbon or resin, although this has not been studied extensively. Adsorption would require collection of off-gas and, thus, could be more easily adapted to a pure oxygen process. Chemical oxidation of emissions before release also may be feasible. Prior to pursuing emission control, the potential problem magnitude should be evaluated thoroughly.

It is doubtful that activated sludge treatment alone will suffice to meet discharge objectives in all instances. Pretreatment is expected to be needed to remove toxic materials which would interfere with optimum performance of the biological system. Post-treatment normally serves to polish the effluent by removing suspended solids and refractory substances. These latter substances generally are expected to be in much lower concentrations than biodegradable substances. Listed below are potentially useful pretreatment steps:

1. Addition of lime, alum, or iron salts to precipitate heavy metals.

2. Carbon sorption which may either be accomplished through PAC addition with or without chemical coagulation or by packed beds of granular carbon. The objective is reduction of chemicals toxic to biological treatment; therefore, large throughputs for

packed beds or small PAC additions may be all that is required to achieve this reduction if the toxic materials are strongly sorbed by the carbon.

3. Ultrafiltration or reverse osmosis are potential pretreatment candidates. These would be used to remove large molecular species which typically include the toxic and refractory species while smaller species which are generally biodegradable (e.g., ethanol, acetone) carry through and are removed in the biological unit.

4. Aeration, sedimentation and filtration may also be useful in some instances. For example, ferrous iron may be oxidized and precipitated to scavenge other heavy metals. Sedimentation with or without filtration could then remove the precipitated ferric hydroxide and reduce toxic heavy metals to acceptable levels.

5. Chemical oxidation, with ozone for example, may serve to detoxify certain materials; however, ozone consumption may be high due to oxidation of materials which are more appropriately biodegraded at much less cost. Alkaline chlorination may be used to oxidize cyanides if present in relatively dilute concentration.

6. Wet air oxidation also may detoxify some organic substances but is expected to be a costly pretreatment step.

7. Ion exchange can remove toxic metal ions but is probably more expensive than chemical precipitation.

8. Electrochemical treatment may be useful in some instances, e.g., it may be preferable to chlorination for reduction of high cyanide concentrations.

9. A.P.I. separator and/or air flotation may be used to remove oil and grease.

Candidate post-treatment steps include:

1. Carbon sorption has strong potential when teamed with biological. Biological treatment can substantially reduce the load to a carbon column and thereby minimize the cost.

2. Chemical coagulation - sedimentation - filtration would be useful for removing residual heavy metals. Some PAC addition may also be performed to clean up low residuals of toxic organics.

Other steps, such as ion exchange and membrane processes may be considered processes for inorganic ion or total dissolved solids removal.

Trickling filters will not produce as high a quality effluent as activated sludge, but may be less troublesome from an operational standpoint and are less likely to cause stripping of volatile compounds. Pre- and post-treatment comments for the activated sludge treatment process also apply to trickling filters.

Aerobic lagoons may be an effective process for treating the organic fraction of a leachate stream. Their large size provides dilution and buffering of load fluctuations. Capital costs and operation and maintenance requirements are less than for activated sludge but land requirements are greater and operational controls are less flexible. If lagoons are aerated by mechanical means, stripping of volatile compounds could be a problem.

Sludge removal may necessitate shut down of lagoon operation, however, clean-out will be determined by leachate composition and lagoon design and could be very infrequent (at intervals of several years). Effluents probably will need to be polished to accomplish the high levels of performance expected to be required. Consequently, pre- and post-treatment processes discussed for activated sludge generally apply to aerobic lagoons.

The two anaerobic processes described in Section 5.2 greatly differ in their configuration and operation. Both, however, may have advantages over aerobic treatment because of less stripping and sludge production. Methane produced could be used as fuel. Anaerobic lagoons also are easier to operate and have lower capital, and operation and maintenance costs. The difficulty of anaerobic filter operation may be comparable to activated sludge. For upflow anaerobic filters, pre-treatment for suspended solids removal may be needed to minimize filter plugging. A lower quality effluent will be produced by anaerobic processes necessitating post-treatment with the considerations discussed for activated sludge applying.

Successful application of anaerobic treatment followed by aerobic treatment for gross and specific organics removal has been reported at bench scale. Successful anaerobic treatment of municipal landfill leachate also has been reported at bench scale.

### 6.5.2 Carbon Adsorption

Activated carbon sorption in packed beds is considered to be a prime candidate for leachate treatment. However, it is anticipated that activated carbon will be used in conjunction with other processes since it is quite expensive to treat moderate to high TOC loads with carbon alone. Furthermore, carbon is not effective for removing many highly soluble low-molecular weight organics. Although most of the low-molecular weight organics are not highly toxic, they will contribute substantially to the COD and BOD of the effluent.

Carbon sorption is best suited for removal of refractory organics following biological treatment. These organics generally are adsorbed most strongly by the carbon and at the low concentrations typically found, the carbon sorption cycle can be lengthened. Consequently, the cost of carbon replacement or regeneration is lowered.

There may be cases where carbon adsorption will be used before biological treatment to protect the biological process from toxics. In these cases complete treatment by the carbon process is not required and organics can be allowed to "leak" from the carbon. Treatability studies, however, are necessary to define leakage levels tolerable by the downstream biological process.

Powdered activated carbon added directly to the activated sludge biological system also is considered to be a potential leachate treatment process where refractory or toxic organics may inhibit biological activity. To assure adequate removal of carbon from the effluent, post-treatment using granular media filtration may be necessary.

If granular carbon usage is low, it is unlikely that on-site thermal regeneration of activated carbon will be performed. Instead, commercial replacement services probably would be used. For powdered activated carbon (PAC) the quantity used also would dictate the decision between one time use of the PAC or regeneration.

Alternative pretreatment steps for the sorption process include the following:

1. Biological treatment (discussed earlier);

2. Solids removed by filtration;

3. Chemical precipitation/coagulation for suspended solids and heavy metals removal followed by sedimentation alone or filtration alone, or a combination of sedimentation and filtration;

4. Aeration followed by sedimentation/filtration for oxidation and precipitation of dissolved iron which removes heavy metals as well as suspended solids. Aeration also may remove volatile organics to relieve loading on activated carbon (however, emissions constraints must be considered);

5. Ozonation to render organics more sorbable by carbon; and

6. Oil removal.

Processes such as ultrafiltration and reverse osmosis do not complement sorption and are not considered good pretreatment candidates. Ion exchange possibly may serve to remove ionic substances such as heavy metals, organic acids, amines, or cyanide; but it is likely that alternative processes will be less expensive.

Post-treatment processes which may be useful include the following:

1. Precipitation - scavenging for removal of residual heavy metals.

2. Biological - for removing biodegradable residuals.

3. Filtration - to provide complete removal of PAC from the treated effluent.

### 6.5.3 Chemical Precipitation/Coagulation

The term chemical precipitation as used here includes the processes of chemical addition, precipitation and flocculation. Post-treatment will include sedimentation or flotation in cases of oily materials. Granular media filtration also may be included for better removal of precipitates.

Typically, precipitation is used for removal of particulate matter and inorganic ions, primarily heavy metals. It is accomplished by adding alum, lime, iron salts (ferric chloride, ferrous sulfate), or hydrogen or sodium sulfide. Organic polyelectrolytes also are used as flocculants or to aid flocculation.

A primary variable in determining chemical doses and removal efficiencies is pH because of its effect on pollutant solubility in the wastewater matrix. Although removals equal to solubility limits are theoretically possible, the formation of organometallic complexes and the incomplete removal of precipitated particles limits actual removal efficiencies.

When organics are present, post-treatment for organics removal will be required. This could take several forms including biological, sorption, or stripping. Reports indicate, however, that coagulation followed by efficient solids removal, e.g., mixed media filtration can provide moderate removals (30-60%) of numerous organic compounds; even when these compounds are present at the low milligram or microgram per liter levels. Provisions also are required to manage sludges generated by the coagulation process.

For some metals, e.g., hexavalent chromium, precipitation must be preceded by a chemical reduction process. For iron, manganese and some other metals pretreatment using chemical oxidation may be required.

### 6.5.4 Density Separation

Sedimentation is likely to be needed for pre- or post-treatment in concert with many of the applicable unit processes. Flotation may be used with or without chemical coagulation for leachates containing oily materials.

### 6.5.5 Filtration

Granular media filtration also is likely to be used for pre- or post-treatment in concert with many of the applicable unit processes.

### 6.5.6 Chemical Oxidation

Two potential applications of chemical oxidation processes to leachate treatment are cyanide destruction and oxidation of organics. Oxidation of metals is considered of secondary importance because most metals are more effectively removed by chemical precipitation or ion exchange. For cyanide destruction, when cyanide concentration is low and complexation with metals is possible, alkaline chlorination or ozonation may be most applicable. Ozonation produces no harmful residuals (the nature of intermediate products must be assessed individually) and also may oxidize organics present in the leachate. A major disadvantage of alkaline chlorination is the potential for formation of chlorinated organics.

The alkaline chlorination process may include two stage chlorination or a second step of acid hydrolysis. Both require close pH control. Pretreatment for metals removal by chemical precipitation may be practiced. Post-treatment (biological or carbon adsorption) for removal of organics may be required when treating leachate.

The ozonation process may include chemical coagulation for metals removal and sedimentation or filtration for suspended solids or precipitate removal. Ozone is not selective and will oxidize cyanide and organics present in the leachate. The degree of oxidation will determine post-treatment requirement. Biological treatment and possibly carbon adsorption may be necessary.

### 6.5.7 Chemical Reduction

The major leachate treatment application of chemical reduction appears to be reduction of hexavalent chromium to trivalent chromium using sulfur dioxide, sulfite salts, or ferrous sulfate as reducing agents. For removal of the soluble trivalent chromium, chemical precipitation with lime or sodium carbonate is used. This precipitation step also may remove other metals present in the leachate.

If cyanide is present chemical oxidation may be a required post-treatment. If organics are present in the leachate, biological or carbon adsorption also may be required post-treatment steps.

Site conditions will influence the valence state of chromium in a leachate. Analytical determinations are necessary to identify the form of chromium in the leachate.

### 6.5.8 Ion Exchange

Ion exchange is an effective but costly method for metallic ion removal. Consequently, the process application probably will be limited to selected situations. For purposes of leachate treatment, a major application could be fluoride removal using activated alumina adsorption. As stated in Section 5.2, adsorption rather than ion exchange is the removal mechanism; however, the process is operated similarly to ion exchange processes. Pre-treatment steps could include sedimentation or filtration to remove suspended solids, or chemical precipitation to remove metals, or both. Because the process is more suited for inorganic ion removal, treatment for organics removal may be required. Treatment and disposal of regenerant and neutralization streams used to regenerate the activated alumina also must be considered.

Total dissolved solids removal is another potential application for ion exchange when non-precipitable dissolved solids are present and TDS levels are generally less than 5000 mg/l. In this case, the process would be used for effluent polishing. Brines or sludges resulting from regeneration require careful management.

### 6.5.9 Membrane Processes

In cases where total dissolved solids (TDS) removal is required and TDS concentration ranges from 5,000 to 50,000 mg/l reverse osmosis could be used for effluent polishing. Concurrent removal of some refractory organics also may be accomplished. When used to treat effluents with high TDS levels the concentrate stream could become very voluminous and would require additional management considerations.

### 6.5.10 Stripping Processes

Stripping processes will have limited application in leachate treatment. This is because of air emissions problems related to air stripping and additional treatment requirements for overhead condensate and stripper bottoms in the case of steam stripping. One possible application of air stripping would be to remove ammonia nitrogen (when biological treatment is not effective) if emissions would not constitute an air pollution problem.

If air stripping is used, chemical precipitation and sedimentation may be used for pretreatment to accomplish metals removal, to take advantage of alkaline pH conditions, and for reduced solids loading to the stripper. If additional alkalinity is necessary, chemicals should be selected with sludge production and disposal considerations in mind.

### 6.5.11 Wet Oxidation

Only limited application of wet oxidation is envisioned at this time because of a lack of process experience. Where leachates are composed primarily of high concentrations of toxic or refractory organics but are too dilute for incineration to be cost-effective, wet oxidation could be considered. Site specific treatability studies should be conducted before selecting the process. Pretreatment requirements probably will be minimal; post-treatment requirements will depend on the degree of oxidation achieved.

Wet oxidation as a regeneration technique for powdered activated carbon used in leachate treatment does appear to be a promising potential application.

## 6.6 PROCESS TRAIN ALTERNATIVES

Since hazardous waste leachates are expected to vary widely in composition and will often contain a variety of constituents, in general, no single unit process will be capable of providing the necessary treatment. Rather, the incorporation of individual unit processes into process trains will be necessary to achieve high levels of treatment in a cost-effective manner.

The most promising unit processes were identified in Section 6.5 Thus, the next step in selecting a leachate treatment system is to formulate process trains which combine unit process technologies in a fashion which optimizes solution of a particular leachate treatment problem.

The formulation of process trains is addressed subsequently in this section for three general types of hazardous waste leachates depending upon the type of contaminants to be treated: organic, inorganic, or combination of organic and inorganic. These are believed to be typical of the types of leachate treatment situations which will be encountered at most hazardous waste disposal sites. Example treatment systems are described for each of the leachate types. These systems were selected to apply to a broad range of contaminants which may be present in leachates and should be capable of achieving high levels of treatment. However, other arrangements of unit processes are possible and may be preferable in some cases as dictated by site specific conditions. Process trains presented herein are believed to have broad applicability but must be evaluated in light of a specific leachate treatment problem.

Descriptions of process trains and operating conditions are presented in differing levels of detail depending on the applicability and reliability of available data. In many cases, the generic type of process (e.g., biological treatment) is illustrated in the process train rather than a specific process (e.g., activated sludge, trickling filter, aerated lagoon) because site specific conditions will control the choice of the specific unit process.

Because of the paucity of data on hazardous waste leachate composition and general lack of experience with leachate treatment, the examples given below were derived from a range of sources: actual leachate with a full scale process train implemented, contaminated groundwater similar in composition to leachate and proposed alternative process trains, and postulated leachates and alternative process trains. The user can compare these situations to the particular case at hand and make judgments about possible treatment approaches.

### 6.6.1 Leachate Containing Organic Contaminants

#### 6.6.1.1 Love Canal Experience--

Experience in the treatment of actual high strength organics-containing leachate has been reported by McDougall, et al. (3,4). They report on the temporary and permanent process trains used to treat leachate from the Love Canal. The processes selected for the permanent facility are listed below and the flow chart is illustrated in Figure 6-2:

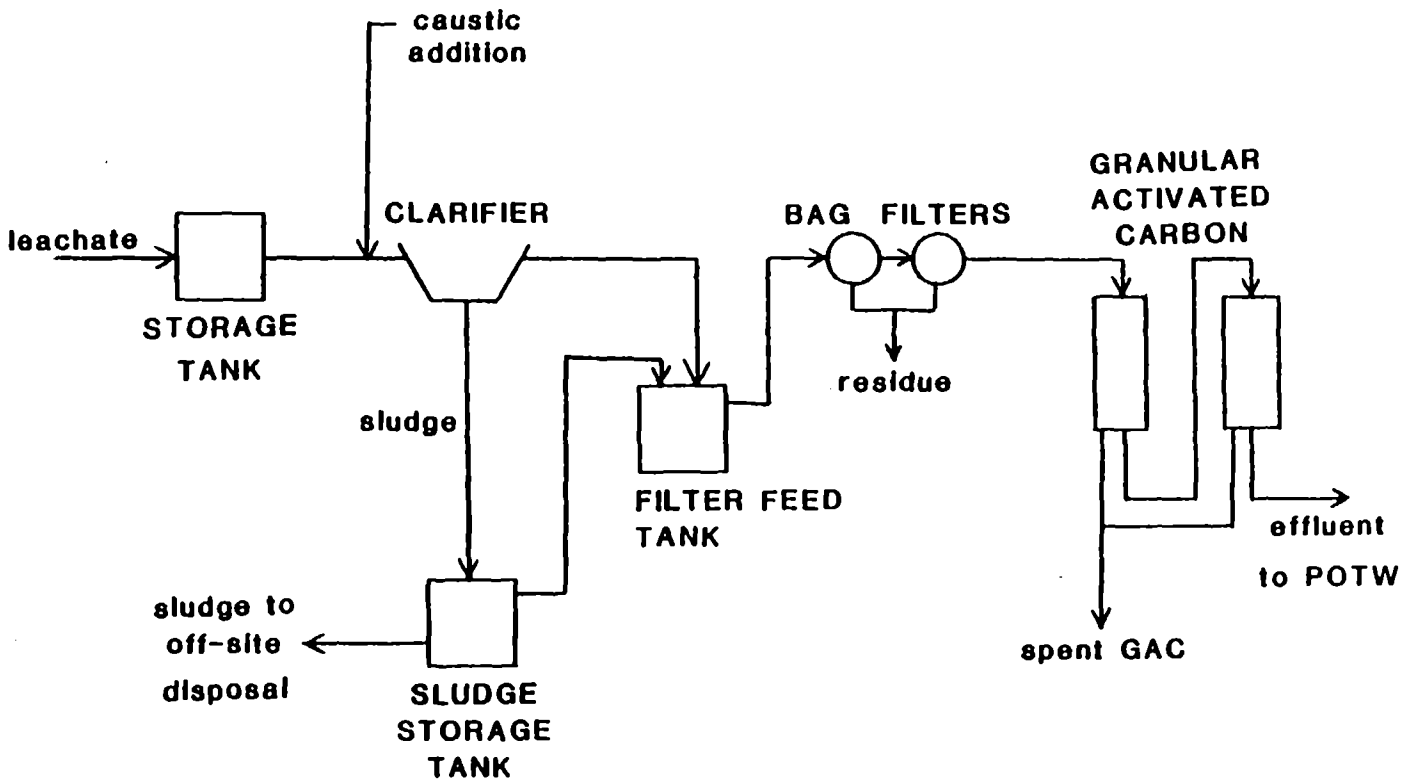


Figure 6-2. Love Canal Permanent Treatment System schematic flow diagram.(3)

- raw leachate holding tank
- neutralization with caustic followed by clarification
- in-line storage tank
- in-line bag filters
- carbon adsorption (2 beds in series)

The leachate treatment facility discharges to the city sewer system which conveys the treated leachate to a physical-chemical municipal sewage treatment plant.

Performance data collected during operation of a temporary system which was similar to the permanent treatment system except that granular media filters were used instead of bag filters are shown in Table 6-1.

Cost for permanent treatment has been reported to be $9.80/m^3$ (3.7¢/gal) which includes amortized carbon system capital, replacement carbon, and equipment maintenance.

The following considerations or actions taken during development of the Love Canal leachate treatment system are illustrative of factors which should be taken into account when selecting a leachate treatment technology in any situation.

1. Love Canal was judged to be a public health hazard and immediate emergency actions were required. This limited the time which could be devoted to evaluating alternative approaches.

2. A leachate existed which could be used for treatability studies. These studies focused primarily on priority (organic) pollutant removals.

3. A physical-chemical POTW was in close proximity. This provided not only a discharge option but also additional treatment and dilution thus serving as a buffering device should the leachate treatment system ultimately selected fail to meet performance requirements.

4. Discharge to a POTW allowed for performance requirements likely to be less stringent than for direct discharge to surface waters.

5. Regular monitoring was practiced and the system was constructed so that system modifications could be made as needed at a future time.

TABLE 6-1 PERFORMANCE DATA ON TEMPORARY TREATMENT SYSTEM AT LOVE CANAL (3)

| Pollutant | Raw Leachate (μg/l) | Carbon System Effluent (μg/l) |
|---|---|---|
| 2,4,6-trichlorophenol | 85 | < 10 |
| 2,4-dichlorophenol | 5,100 | N.D. |
| Phenol | 2,400 | < 10 |
| 1,2,3-trichlorobenzene | 870 | N.D. |
| Hexachlorobenzene | 110 | N.D. |
| 2-chloronaphthalene | 510 | N.D. |
| 1,2-dichlorobenzene | 1,300 | N.D. |
| 1,3&1,4-dichlorobenzene | 960 | N.D. |
| Hexachlorobutadiene | 1,500 | N.D. |
| Anthracene and phenanthrene | 29 | N.D. |
| Benzene | 28,000 | < 10 |
| Carbon tetrachloride | 61,000 | < 10 |
| Chlorobenzene | 50,000 | 12 |
| 1,2-dichloroethane | 52 | N.D. |
| 1,1,1-trichloroethane | 23 | N.D. |
| 1,1-dichloroethane | 66 | N.D. |
| 1,1,2-trichloroethane | 780 | < 10 |
| 1,1,2,2-tetrachloroethane | 80,000 | < 10 |
| Chloroform | 44,000 | < 10 |
| 1,1-dichloroethylene | 16 | N.D. |
| 1,2-trans dichloroethylene | 3,200 | < 10 |
| 1,2-dichloropropane | 130 | N.D. |
| Ethylbenzene | 590 | < 10 |
| Methylene chloride | 140 | 46 |
| Methyl chloride | 370 | N.D. |
| Chlorodibromomethane | 29 | N.D. |
| Tetrachloroethylene | 44,000 | 12 |
| Toulene | 25,000 | < 10 |
| Trichloroethylene | 5,000 | N.D. |
| TOC | ∿ 1,000 mg/l | ∿ 30 mg/l |

N.D. - not detected

Results of limited treatability and feasibility study efforts prior to treatment system selection are summarized below:

1. A mobile treatment unit equipped for pH adjustment, clarification, sand filtration, and carbon adsorption was operated at the site and produced effluent which was found to be acceptable for discharge (3).

2. Because granular activated carbon was believed to be the best available technology for priority pollutant removal from the leachate, carbon isotherm, dynamic column, and carbon reactivation studies were undertaken (4). Isotherms indicated that the treatment objective of 300 mg/l TOC could be met with reasonable carbon usage. Dynamic column studies indicated that the 300 mg/l TOC limit could be achieved; that only one organic compound, methanol, was found in the effluent in the mg/l range; that no traces of several priority pollutants were found in the effluent; and that pretreatment would be required to provide separation of oily, liquid, and sludge phases in the raw leachate. Carbon reactivation studies indicated that high temperature reactivation could restore most of the carbon adsorptive capacity, and that the reactivation furnace and afterburner could be operated to provide total destruction of the organics.

3. Biological treatability studies were conducted in small scale reactors (5). Leachate was diluted with nutrient supplemented tap water or sewage in these studies. Results indicated that biodegradation was possible at 1:5 dilution with either tap water or sewage provided that nutrients were added and pH was controlled. Since the oxygen demand was high and there was a possibility that off-gases might contain undesirable compounds, a closed pure-oxygen system with scrubbing or carbon adsorption of off-gases was thought to be promising (5). These initial studies also concluded that carbon adsorption treatment of raw leachate was impractical because of the high carbon doses required and that pretreatment with activated sludge with carbon polishing might be reasonable. Leachate quality, however, was found to change substantially from that used in these early tests.

The results of these treatability studies and the performance data presented in Table 6-1 illustrate the treatability of this leachate. A comparison of these results with treatability information for carbon adsorption in Appendix E leads to the following observations:

1. treatability information for 25 of the 31 compounds listed in Table 6-1 is given in Appendix E, and

2. the treatability information for these compounds very closely corresponds to the performance indicated in Table 6-1.

While the data in Appendix E do not always indicate the best level attainable in an effluent, they do indicate which compounds are treatable and provide an estimate of process performance. This demonstrates the usefulness of Appendix E data in aiding initial screenings of technologies especially for those with greater application experiences.

The Love Canal experience illustrates a case where activated carbon treatment is an effective and relatively cost-effective method for removing organic contaminates from a hazardous waste leachate. This approach may or may not have been the optimum choice but the emergency nature of the situation did not permit lengthy process optimization studies. Since the Love Canal leachate treatment system is an operating facility, additional experience should better define the effectiveness and costs associated with this approach.

6.6.1.2 Ott/Story Site Study--

On-going efforts to evaluate technologies for treating groundwater contaminated by a variety of toxic and hazardous organic compounds have been reported in several references (6,7,8,9). This experience is highlighted for several reasons even though the subject wastewater is groundwater rather than leachate:

1. Many of the compounds are the same as would be expected to occur in leachate.

2. Treatability studies have been conducted using groundwater obtained from the most concentrated part of the contamination plume. Therefore, contaminant concentrations may approach those of leachate.

3. Groundwater quality data indicate compounds which are likely to migrate.

4. The compounds present include toxic and hazardous pollutants as well as other organics. Thus, treatability results reflect the effects of the non-toxic, non-hazardous organics in the matrix.

5. Numerous technologies are being screened in the laboratory using actual wastewater.

6. The site is subject to on-going remedial action work so that further information is likely to become available.

Table 6-2 presents a summary of raw groundwater composition data as represented by composite samples from two wells in the contaminant plume which are being used in the treatability studies. Groundwater samples from other wells in the problem area differ widely in composition from those presented here.

TABLE 6-2 OTT/STORY GROUNDWATER CHARACTERIZATION

| Parameter | Composition Range** |
|---|---|
| pH | 10 - 12 |
| COD | 5400 mg/l |
| TOC | 600 - 1500 mg/l |
| NH -N | 64 mg/l |
| Organic N | 110 mg/l |
| Chloride | 3800 mg/l |
| Conductivity | 18,060 mhos/cm |
| TDS | 12,000 mg/l |
| Volatile Organics: | |
| Vinyl chloride* | 140 - 32,500 |
| Methylene chloride* | <5 - 6570 |
| 1,1-Dichloroethylene* | 60 - 19,850 |
| 1,1-Dichloroethane* | <5 - 14,280 |
| 1,2-Dichloroethane* | 0.350 - 111 mg/l |
| Benzene* | 6 - 7800 |
| 1,1,2-Trichloroethane* | <5 - 790 |
| 1,1,2,2-Tetrachloroethane* | <5 - 1590 |
| Toluene* | <5 -5850 |
| Ethyl benzene* | <5 - 470 |
| Chlorobenzene* | <5 - 140 |
| Trichlorofluoromethane* | <5 - 18 |
| Chloroform | 1400 |
| Trichloroethylene | 40 |
| Tetrachloroethylene | 110 |

(continued)

TABLE 6-2 (continued)

| Parameter | Composition Range** |
|---|---|
| Acid Extractable Organics: | |
| o-Chlorophenol* | <3 - 20 |
| Phenol* | <3 - 33 |
| o-sec-Butylphenol*** | <3 - 83 |
| p-Isobutylanisol*** or p-Acetonylanisol*** | <3 - 86 |
| p-sec-Butylphenol*** | <3 - 48 |
| p-2-oxo-n-Butylphenol | <3 - 1357 |
| m-Acetonylanisol*** | <3 - 1546 |
| Isopropylphenol*** | <3 - 8 |
| 1-Ethylpropylphenol | <3 |
| Dimethylphenol* | <3 |
| Benzoic acid | <3 - 12,311 |
| Methylphenol | 40 |
| Methylethylphenol | 20 |
| Methylprophylphenol | 210 |
| 3,4-D-Methylphenol | 160 |
| Base Extractable Organics: | |
| Dichlorobenzene* | <10 - 172 |
| Dimethylaniline | <10 - 17,000 |
| m-Ethylaniline | <10 - 7640 |
| 1,2,4-Trichlorobenzene* | <10 - 28 |
| Naphthalene* | <10 - 66 |
| Methylnapthalene | <10 - 290 |
| Camphor | <10 - 7571 |
| Chloroaniline | <10 - 86 |
| Benzylamine or o-Toluidine | <10 - 471 |
| Phenanthrene* or Anthracene* | <10 - 670 |
| Methylaniline | 310 |

* - A priority pollutant
** - All concentrations in μg/l except as noted
*** - Structure not validated by actual compound

Because the contamination problem is solely organic in nature, the following processes individually and in combination have been selected for screening:

- biological treatment - activated sludge, trickling filter, anaerobic filter;

- chemical precipitation;
- granular and powdered activated carbon adsorption; resin adsorption;
- air and steam stripping; and
- ozonation.

Results of completed studies are summarized below:

1. Chemical coagulation of raw groundwater does not achieve significant removal of organics as measured by TOC reduction. It also does not appear to be necessary in order to maintain flow through downflow packed bed granular activated carbon (GAC) columns.

2. An aerobic biomass could not be acclimated to treat raw groundwater. Biological treatment provided about 60% TOC reduction; however, stripping due to aeration appeared to account for about two-thirds of what was accomplished in the biological treatment process.

3. Addition of trace elements and nutrients did not aid acclimation to raw groundwater.

4. Addition of powdered activated carbon to the aeration chamber at concentrations of about 10,000 mg/l neither aided acclimation to raw groundwater nor improved TOC removal or mixed liquor appearance.

5. Batch adsorption studies for four different carbons and three resins indicated that no sorbent was able to reduce residual TOC to less than 230 mg/l.

6. Granular activated carbon (GAC) employed in continuous flow small columns was not capable of sustaining high levels of TOC removal. TOC removal declined to <50% after processing <5 bed volumes (BV). Within 100-160 BV TOC removal declined to 10% to 15% and remained at this level for up to 200 BV.

7. GAC adsorption was capable of sustaining high levels of organic priority pollutant removals even when TOC removal had declined to 35% and effluent TOC levels were approximately 600 mg/l. In both batch and continuous flow adsorption studies, some volatile priority pollutants were detected in the

effluent. None of the acid or base-neutral extractable organic priority pollutants detected in the raw groundwater were found in GAC effluent after processing up to 71 BV of groundwater.

8. Continuous flow, small column, resin adsorption studies demonstrated TOC breakthrough characteristics similar to those for GAC adsorption. However, TOC breakthrough occurred more rapidly with resin than with carbon.

9. GAC pretreatment of raw groundwater enabled development of a culture of aerobic organisms capable of further treating GAC effluent. In excess of 95% TOC removal was achieved by this process during the period which GAC removal of TOC exceeded 30%. After this initial period, process train performance declined as GAC performance declined.

10. Several organic priority pollutants were detected in off-gas from activated sludge reactors; these included methylene chloride, 1,2-dichloroethane, benzene, tetrachloroethylene, and toluene. No organic priority pollutants were detected in an activated sludge biomass sample.

11. Anaerobic treatment (upflow anaerobic filter, UAF) of GAC pretreated groundwater was possible. UAF performance appeared to decline as GAC performance declined. Overall the GAC/UAF process train performed more poorly than the GAC/activated sludge process train.

Based upon these results, one can make several observations:

1. The removal of priority pollutants by the granular activated carbon and the air stripping unit processes generally corresponds with other published information including that contained in Appendix E.

2. A considerable fraction of the TOC is made up of non-priority organic compounds. This fraction of the TOC is more difficult to remove than the priority pollutants.

3. The need for removal of the TOC attributed to the non-priority pollutants needs to be closely assessed. A limited number of static bioassay tests with Daphnia Magna or carbon treated groundwater suggest significant residual toxicity;

whether this is attributable to the compounds present or to low dissolved oxygen levels needs to be determined.

Results of the treatability studies to date suggest that a process train consisting of granular activated carbon followed by aerobic biological treatment is the most feasible approach to treatment of this groundwater.

This process train which, in general, is applicable to high TOC wastewaters in situations where waste stream components may be toxic to biological cultures is illustrated in Figure 6-3.

The rationale is to utilize the activated carbon to protect the biological system from toxicity problems. Therefore, the carbon could be allowed to "leak" relatively high concentrations of TOC (organics) rather than be operated to achieve maximum reduction of organic compounds. Allowable leakage would be based upon determination of the point at which the carbon treated effluent becomes toxic to the subsequent biological process. Thus, the selection of the allowable TOC or organics leakage (i.e., breakthrough) from the carbon contactors is crucial to the performance and cost effectiveness of this process train. Higher organic loads handled by the biological system result in greater service life of the granular carbon and consequently, lower costs related to the carbon treatment phase.

The flowsheet depicted in Figure 6-3 includes a chemical coagulation step (including settling and filtration). Although not necessary in the groundwater treatment situation discussed above, these processes could be used in situations where soluble inorganics removal or particulate removal to minimize head losses and frequent backwashing in carbon contact columns may be necessary.

Several disadvantages may be associated with the treatment system given in Figure 6-3 as illustrated by the above groundwater treatment case:

1. Substantial carbon utilization rates to maintain effluent TOC levels below 100 mg/l; and

2. Stripping of volatile compounds in activated sludge off-gases.

Other factors which must be considered in evaluating this approach include carbon regeneration feasibility and sludge disposal alternatives.

6.6.1.3 Other Possibilities--

Several other potentially effective process trains for treatment of leachates containing primarily organic contaminants

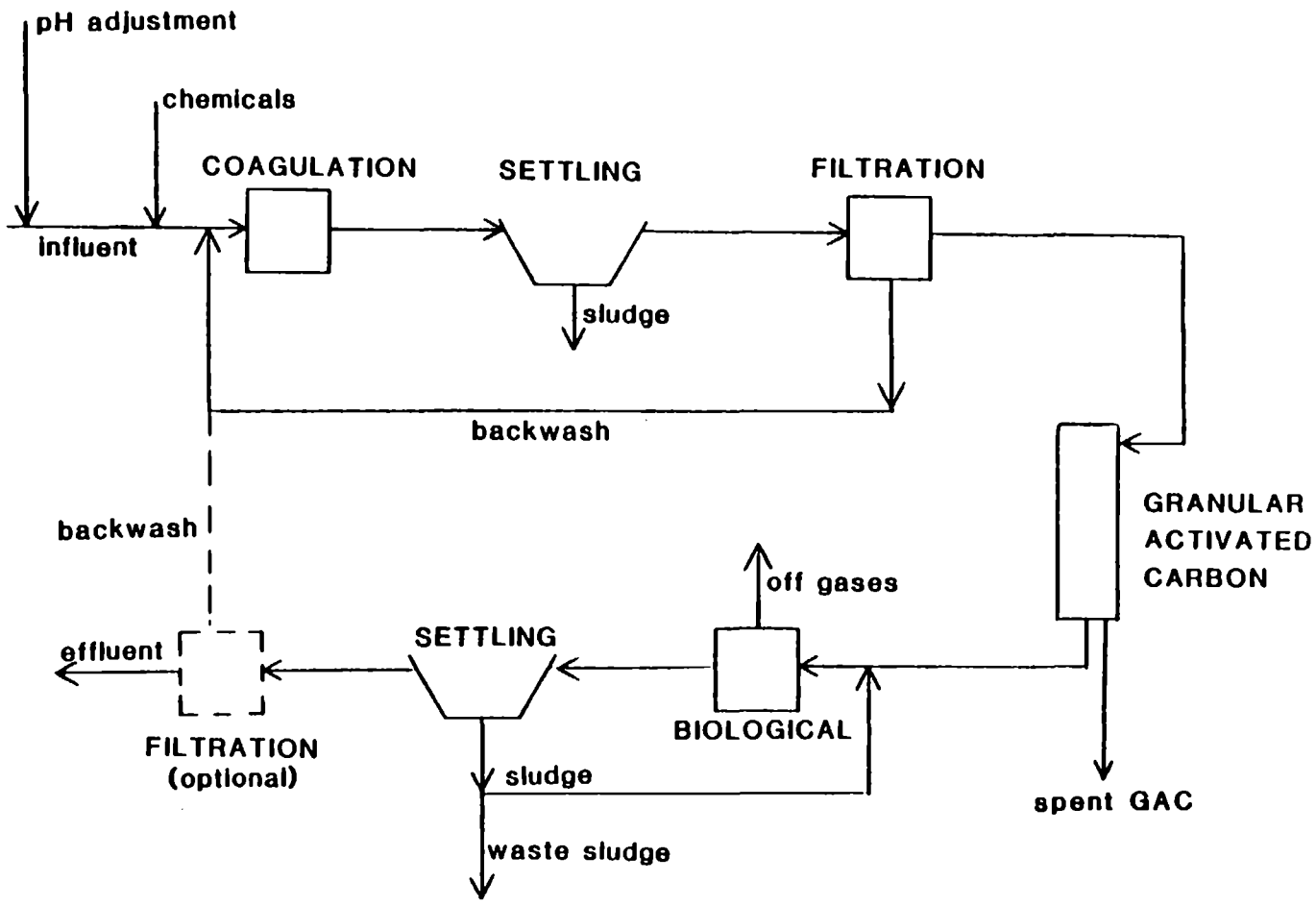


Figure 6-3. Schematic of carbon sorption/biological process train.

have been postulated elsewhere (9). One of these, believed to have high potential, is depicted in Figure 6-4 which illustrates a sequence of biological treatment followed by granular carbon sorption. This process train is applicable to treatment of wastewaters high in TOC, low in toxic (to a biomass) organics, and containing refractory organics. Chemical coagulation and pH adjustment are provided for heavy metals removal and protection of the subsequent biological system. This may not be necessary if heavy metal concentrations are below toxicity thresholds and if the moderate removal efficiencies typical of activated sludge are sufficient. Biological treatment such as activated sludge, or anaerobic filters is included to reduce BOD as well as biodegradable toxic organics. This reduces the organic load to subsequent sorption processes. To prevent rapid head losses caused by accumulation of solids in the sorption columns, clarification and multi-media filtration are provided. The intent is to reduce suspended solids to 25-50 mg/l. Granular carbon adsorption is included to remove refractory organic residuals and toxic organics. Activated carbon rather than polymeric or carbonaceous resins has been suggested because more full scale experience exists and performance as well as design and operating criteria have been reported. This process train is expected to be highly effective and relatively economical when compared to other alternatives. Its success, however, is dependent on biological system performance. Moreover, the presence of high concentrations of volatile organic constituents may create a potential air contamination problem. Three by-product wastes are produced: chemical sludge, biological sludge, and spent carbon. Spent carbon can be regenerated but the sludge must be disposed.

### 6.6.2 Leachate Containing Inorganic Contaminants

Disposal sites or segregated portions of sites handling solely inorganic hazardous wastes, e.g., wastes from the metals plating and finishing industry, are likely to generate leachates of predominantly inorganic nature. The most probable approach to treatment of this type of leachate would be chemical precipitation followed by sedimentation and possibly filtration, as well. However, it may be necessary to modify/supplement this approach if any of the following conditions pertain:

1. hexavalent chromium present - addition of chemical reduction process,

2. cyanide present - addition of alkaline chlorination or ozonation,

3. total dissolved solids control required - addition of ion exchange if TDS level is less than about 5,000 mg/l or reverse osmosis if TDS level is about 5,000 to 50,000 mg/l, or

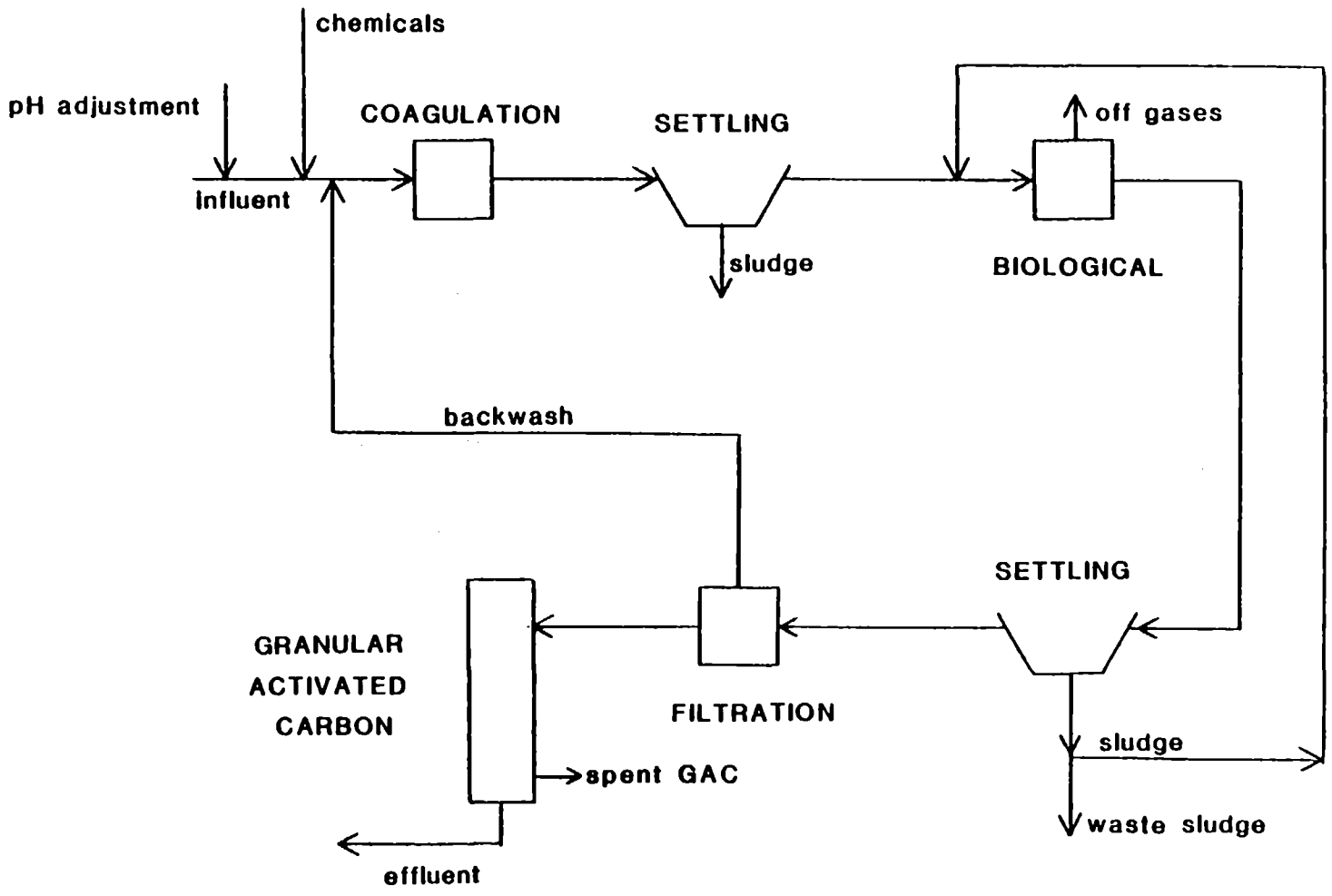


Figure 6-4. Schematic of biological/carbon sorption process train.

4. ammonia present - addition of air stripping or ion exchange.

Several examples of leachates containing only inorganic contaminants are discussed subsequently to illustrate process trains responsive to the above conditions. Cases discussed are as follows:

1. heavy metals only (Figure 6-5);

2. heavy metals including hexavalent chromium (Figure 6-6);

3. heavy metals including hexavalent chromium and cyanide (Figure 6-7); and

4. heavy metals, ammonia, and TDS control (Figure 6-8).

Figure 6-5 illustrates a process train for treating leachates containing several heavy metals. The treatment system includes chemical precipitation using lime or ferric chloride. Depending upon the metals present, the pH should be adjusted to 8.0 - 9.5. Flocculation could be aided by polymer addition for more efficient precipitate removal in the subsequent sedimentation step. Polishing with granular media filtration also could be provided for better solids removal.

Figure 6-6 is a treatment process schematic for leachate containing heavy metals including hexavalent chromium. The first step in the process is chemical reduction at an acidic pH (pH reduced to 3.0 or less with sulfuric acid) to reduce hexavalent chromium to the trivalent state. Sulfur dioxide is used as the reducing agent; although sodium bisulfite or metabisulfite can be used. Following reduction, the pH is raised to pH 8.0 to 9.5 using lime or sodium hydroxide. This results in the precipitation of trivalent chromium as well as other metals. The remainder of the process train is as shown in Figure 6-5.

Figure 6-7 is a process schematic illustrating the treatment of a hazardous waste leachate containing cyanide and heavy metals including hexavalent chromium. Alkaline chlorination (with NaOCL or $Cl_2$ gas) at pH 9.0 to 10.5 for cyanide oxidation is provided first. Complete cyanide oxidation requires close pH control and an excess of chlorine. Reaction time and chlorine requirements depend greatly on operating pH. Ozone oxidation is a potential alternative to alkaline chlorination particularly for leachates containing organic compounds which might be converted to chlorinated forms.

Chemical reduction of hexavalent chromium to the trivalent state is accomplished next. For this step pH must be decreased to less than pH 3 using sulfuric acid. Sulfur dioxide is added

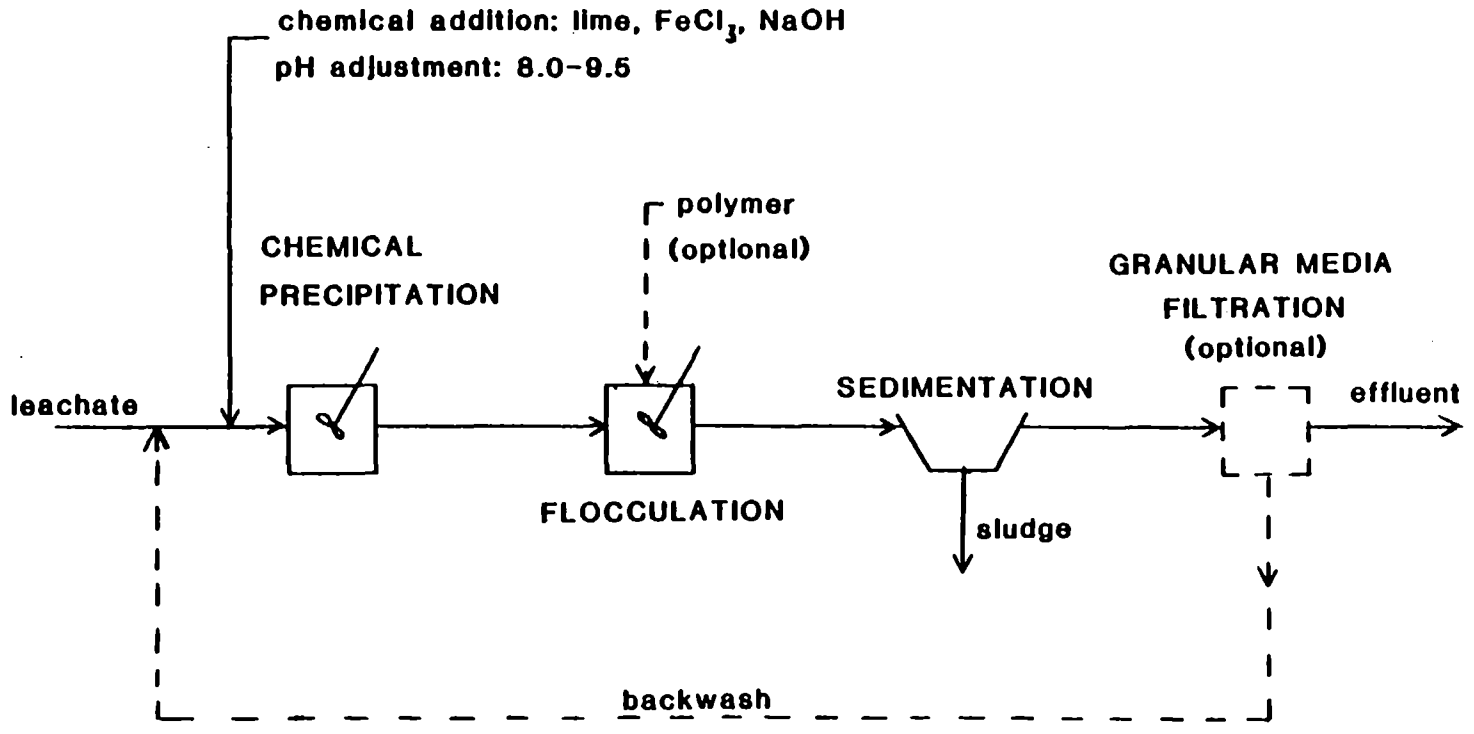


Figure 6-5. Process train for leachate containing metals.

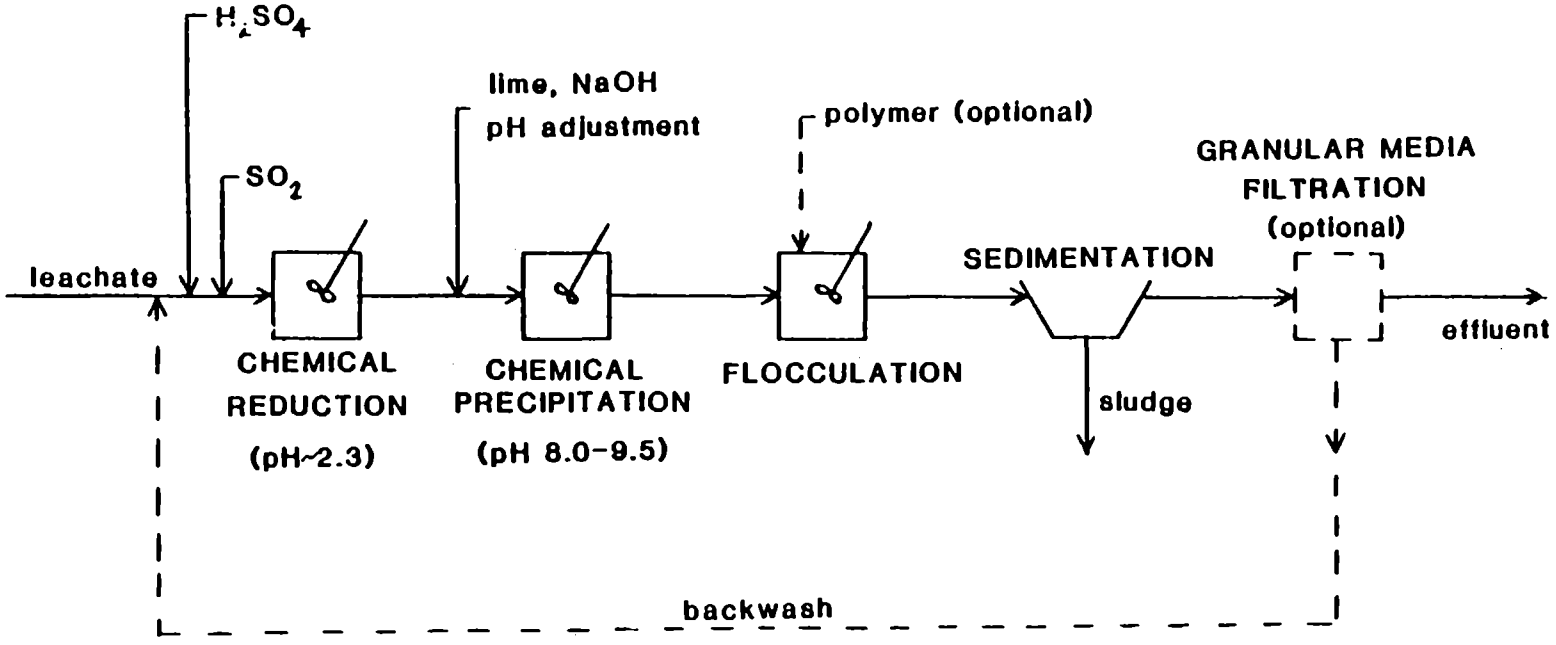


Figure 6-6. Process train for leachate containing metals including hexavalent chromium.

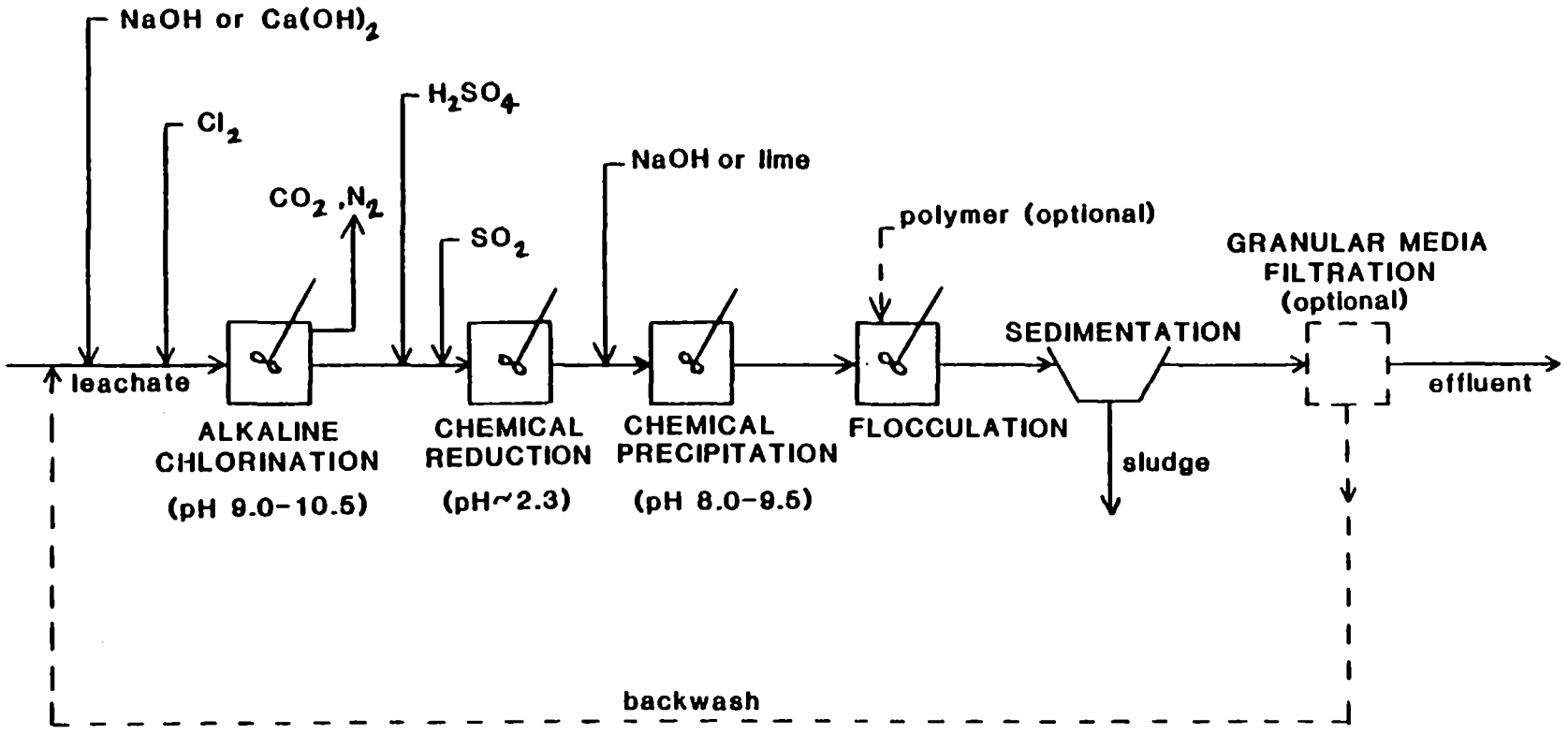


Figure 6-7. Process train for leachate containing metals including hexavalent chromium and cyanide.

as the reducing agent. Care must be taken to assure complete cyanide removal prior to this process because acid conditions permit generation of toxic hydrogen cyanide gas. Following reduction, pH is raised to pH 8.0 to 9.5 for precipitation of trivalent chromium and other metals. The remainder of the process train is as shown in Figure 6-5.

Several alternatives for treating leachates containing metals and ammonia and also requiring TDS control are illustrated in Figure 6-8. The first phase of the process train addresses removal of heavy metals using chemical precipitation as depicted in Figure 6-5.

Two alternatives for subsequent ammonia removal then are presented. Alternative 1 involves selective ion exchange using clinoptilolite, (a natural zeolite). For removing ammonia concentrated in the regenerant stream, air stripping can be used and the lime slurry regenerant can be reused. Alternative 2 uses an air stripping tower operated under alkaline conditions; pH adjustment can be accomplished using sodium hydroxide or lime. Use of the latter, however, can generate large volumes of sludge.

The last phase of the process train in Figure 6-8 provides for TDS control using either ion exchange or reverse osmosis. Ion exchange resins would include cationic and anionic species; whether strong-acid or base, or weak-acid or base are used depends on the ions to be exchanged.

Each of the treatment systems discussed above produces chemical sludges which may have to be handled as hazardous wastes. Disposal of these residues is discussed in Section 5.4. The primary disposal alternative is to landfill, preferably without dewatering or stabilization. However, site specifics and subsequent resolubilization concerns will influence this decision.

The foregoing cases and example process trains do not encompass every conceivable leachate treatment situation involving hazardous waste leachates containing only inorganic contaminants. However, the examples are applicable to a broad range of leachate concerns and are illustrative of the approach to formulation of conceptual process flowsheets.

### 6.6.3 Leachate Containing Organic and Inorganic Pollutants

Hazardous waste leachate is expected frequently to be more complex than the previous cases and may contain both inorganic and organic contaminants. Treatment of this leachate will involve some combination of the treatment processes discussed in Sections 6.6.1 and 6.6.2. Because possible leachate composition variations are numerous, it is not feasible to illustrate the

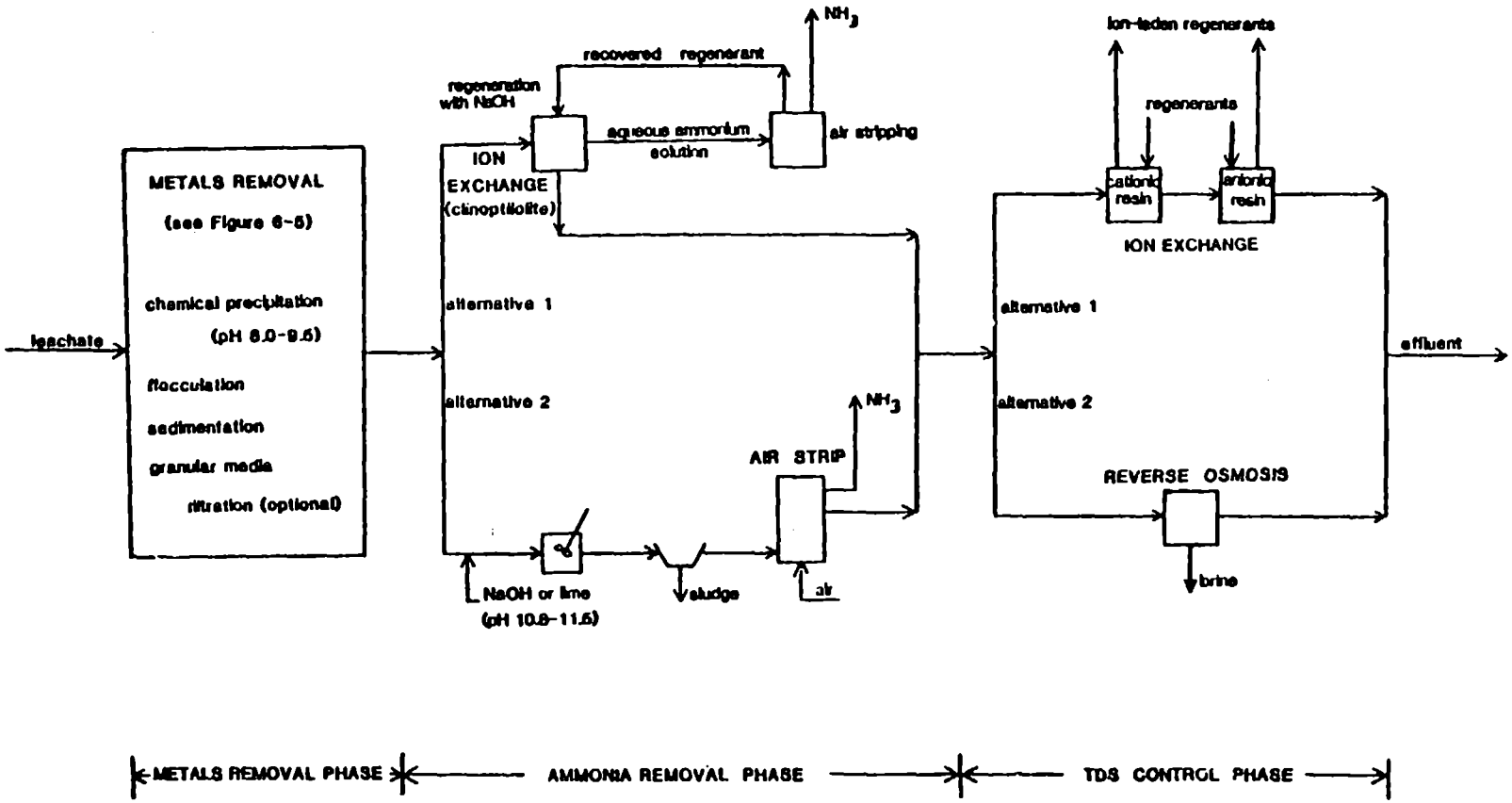


Figure 6-8. Process train for leachate containing metals and ammonia and requiring TDS control.

myriad of potential treatment process trains. Instead, an overview of important considerations is presented based upon information provided throughout this manual.

In general, when both inorganic and organic contaminants are present, the inorganics generally should be removed first to minimize effects on subsequent processes. Examples of such effects include metal toxicity to biological processes and corrosion, scaling, and inerts accumulation during carbon regeneration. Information on metals toxicity to biological processes is included in Appendix E and in a report by Pajak, et al. (10).

The processes most suitable for inorganics removal are discussed in Section 6.6.2 and are illustrated in Figures 6-5, 6-6, 6-7, and 6-8. These processes include chemical precipitation, chemical oxidation and reduction, neutralization, filtration, and sedimentation. In addition to providing inorganics removal, chemical precipitation and oxidation processes also could effect some pretreatment of organic compounds. This is especially true for chemical oxidation with ozone or hydrogen peroxide and is a factor which must be considered when chemical dosage requirements are determined. Handling of residues generated by these processes is discussed in Sections 5.4 and 6.6.2.

The two leading processes for treating organics are biological treatment and activated carbon adsorption. Whether these processes should be used separately or in combination depends upon leachate characteristics. If the organics consist solely of biodegradable compounds, then biological treatment alone would suffice; although a subsequent solids removal polishing step could be necessary in some situations.

A leachate containing degradable organics only is not expected to occur frequently; consequently, the two processes most frequently will be used in series. They may be arranged with the biological process preceding granular activated carbon (GAC) to remove degradable organics and reduce the organic load to the GAC process which then is used for refractory organics removal and polishing. To avoid GAC column plugging a sedimentation or filtration step should be located between the biological process and GAC. This treatment sequence could be applied when organics content is high and refractory but not when toxic organics are present.

A second arrangement would be to have GAC preceding biological treatment. This sequence would be used when toxic organics would interfere with the biological process. The GAC could be operated to leak the maximum concentration of organics that the biological system could tolerate and still meet performance requirements. This results in a longer sorption cycle for the carbon.

Approaches to treatment of the organic component of leachates have been discussed in Section 6.6.1 and process train schematics given in Figures 6-2, 6-3, and 6-4. One additional process train which merits consideration is shown schematically in Figure 6-9. This biophysical treatment approach combines simultaneous biological (activated sludge) and powdered activated carbon treatments in the biological process reactor. This approach is simpler than the previously described sequential carbon-biological treatments and has the potential of achieving comparable effluent quality. Potential advantages include the use of less costly carbon (powdered vs. granular) and minimization of physical facilities required. Spent carbon-biological sludge can be regenerated or dewatered and disposed directly. However, if the latter approach is considered, it is necessary to include cost for disposal of toxics-laden carbon when making economic comparisons.

Most of the considerations necessary for development of a process train for treatment of leachates containing both organic and inorganic contaminants have been previously discussed in Sections 6.6.2 and 6.6.3. The components discussed in these previous sections must be assembled in a manner so as to optimize the treatment process train for the leachate at hand. Probably the most important aspect is proper sequencing of unit processes to achieve an optimum result for a given situation. Careful attention should be paid to proper interfacing of components discussed in Sections 6.6.2 and 6.6.3 (e.g., pH control may be necessary from one treatment component to the next). With these cautions in mind, the reader is referred to these earlier sections to derive a basis for formulating conceptual process trains for mixed (organic and inorganic) component leachates.

## 6.7. REFERENCES


1. U. S. Environmental Protection Agency. Water Quality Criteria Documents Availability. Federal Register,45 (231): 79318-79379. U. S. Government Printing Office, Washington, D.C. November 28, 1980.

2. U. S. Environmental Protection Agency. Proposed Ground Water Protection Strategy. U. S. Environmental Protection Agency, Washington, D.C. November 18, 1980.

3. McDougall, W. J., S. D. Cifrulak, R. A. Fusco, and R. P. O'Brien. Treatment of Chemical Leachate at the Love Canal Landfill Site. In: Proceedings of the Twelfth Mid-Atlantic Industrial Waste Conference, Bucknell University, Lewisburg, Pennsylvania, 1980. pp 69-75.

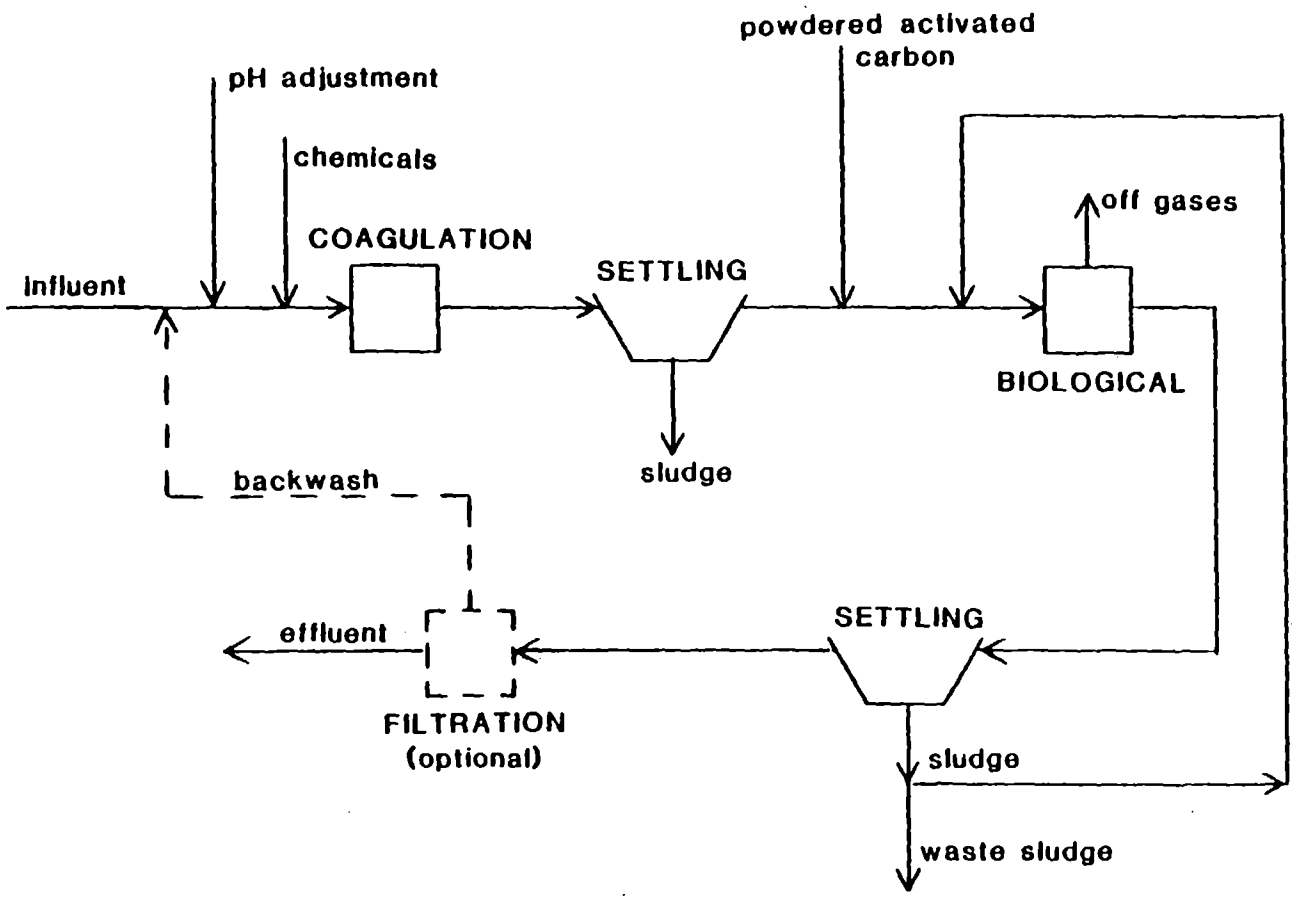


Figure 6-9. Schematic of biophysical process train.

4. McDougall, W. J., R. A. Fusco, and R. P. O'Brien. Containment and Treatment of the Love Canal Landfill Leachate. Journal of the Water Pollution Control Federation, 52(12): 2914-2924, 1980.

5. Barth, E. F. and J. M. Cohen. Evaluation of Treatability of Industrial Landfill Leachate. Unpublished Report. U. S. Environmental Protection Agency, Cincinnati, Ohio. November 30, 1978.

6. Pajak, A. P., A. J. Shuckrow, J. W. Osheka, and S. C. James. Concentration of Hazardous Constituents of Contaminated Groundwater. Proceedings of the Twelfth Mid-Atlantic Industrial Waste Conference, Bucknell University, Lewisburg, Pennsylvania. July, 1980. pp 82-87.

7. Shuckrow, A. J., A. P. Pajak, and J. W. Osheka. Concentration Technologies for Hazardous Aqueous Waste Treatment. EPA-600/2-81-019, U. S. Environmental Protection Agency, Cincinnati, Ohio. February, 1981.

8. Pajak, A. P., A. J. Shuckrow, J. W. Osheka, and S. C. James. Assessment of Technologies for Contaminated Groundwater Treatment. Proceedings of the Industrial Waste Symposia, 53rd. Annual WPCF Conference, Las Vegas, Nevada. September, 1980.

9. Shuckrow, A. J., A. P. Pajak, J.W. Osheka, and S. C. James. Bench Scale Assessment of Technologies for Contaminated Groundwater Treatment. Proceedings of National Conference on Management of Uncontrolled Hazardous Waste Sites, Washington, D.C. October, 1980. pp 184-191.

10. Pajak, A. P., E. J. Martin, G. A. Brinsko, and F. J. Erny. Effect of Hazardous Material Spills on Biological Treatment Process. EPA-600/2-77-239, U. S. Environmental Protection Agency, Cincinnati, Ohio, 1977. 202 pp.

# SECTION 7

# MONITORING

## 7.1 GENERAL DISCUSSION

This section is intended to point out considerations which are important in the design of a monitoring program to support hazardous waste leachate management efforts. It is not intended to be a rigorous exposition of how monitoring should be accomplished nor does it address aspects of monitoring which are not directly related to leachate management. Numerous analytical standards and texts which detail many of the specific aspects are available to guide development procedures. Moreover, the user should recognize that leachate monitoring, as discussed herein, probably will be carried out as one element in an overall disposal site monitoring program which will encompass additional considerations and objectives.

Leachate monitoring is needed to characterize aqueous wastes which result from disposal of hazardous materials at permitted sites, to develop data necessary for design and operation of leachate treatment facilities, to evaluate the effectiveness of leachate treatment systems, to assure compliance with discharge permits, and to assure personnel safety in leachate handling and treatment operations.

A leachate monitoring program in the broadest sense could encompass the following objectives:

1) Define materials placed within the disposal site,

2) Determine the types of compounds in the leachate and their concentration ranges,

3) Determine the variation of concentrations as a function of time,

4) Determine the factors which influence movement and concentrations,

5) Determine the rate and direction of migration,

6) Establish leachate treatment process alternatives,

7) Establish leachate treatment process operating ranges,

8) Monitor leachate treatment process effectiveness,

9) Monitor leachate containment effectiveness,

10) Assure safety in leachate handling and processing operations, and

11) Determine conformance to or accuracy of a leachate forecasting procedure.

The above items are not of equal concern in the current context. Moreover, some encompass aspects of disposal site management which are broader than leachate management alone. The relative importance and potential usefulness of these objectives from a leachate management viewpoint are discussed subsequently in this section.

Monitoring can be carried out at several locations in the leachate management system:

1) Wastes received for disposal,

2) In-situ monitoring for off-gas generation and leachate formation,

3) Collected leachate,

4) Leachate treatment system,

5) Treatment system effluent and residues, and

6) Areas of potential safety hazards.

Reasons for monitoring at the locations noted above, and the types of information needed are described later in this section.

Monitoring data are expected to be used for a variety of purposes. Data obtained on incoming wastes will permit hazardous waste disposal site operators to decide whether or not to accept the wastes. It also will provide an inventory of materials. Given such an inventory, the site operator can have a basis for predicting the range of compounds likely to be encountered in resultant leachate. Concentrations of certain contaminants in the leachate might be able to be estimated based upon the amount and type of materials disposed. This aspect is important at new sites prior to the time of leachate generation. Moreover, such information can provide a basis for initial selection of parameters to be measured in subsequent leachate characterization efforts.

In-situ monitoring data can be used to determine how the leachate is formed and how it moves through the disposal site. Furthermore, it may be possible to use in-situ data to characterize the types and concentrations of compounds in the leachate collection system. Monitoring collected leachate is one of the most important aspects of leachate monitoring. The information gained provides a baseline for treatment system influent characterization; thus facilitating decisions regarding treatability (or necessary treatability studies) and optimum treatment/disposal operating ranges.

Other important monitoring data obtained will be that from treatment process operations. Such data are necessary to assure proper functioning of treatment system components, to establish treatment system effectiveness, and to assure compliance with discharge permit requirements.

Manual users are reminded that the discussion of monitoring herein emphasizes leachate. While other aspects are important in overall disposal site management, e.g. monitoring of the surrounding environs, other technical resource documents are expected to deal with these topics in greater detail.

## 7.2 MONITORING PROGRAM DESIGN

To a large extent, design of a leachate monitoring program will be highly site specific. However, there are certain general elements which will be common to all monitoring programs. The following discussion addresses these general considerations. Although it is recognized that monitoring of some gaseous and solid materials may be involved in the program, the primary focus herein is on liquid streams.

### 7.2.1 Parameters To Be Measured

Selection of parameters to be measured is the initial step in development of a monitoring program. Analytical costs can be significant. Therefore, a major objective should be to minimize the number and types of analysis performed while still generating data sufficient to satisfy the objectives of the monitoring program.

Substances of potential concern in hazardous waste leachate include:

1) soluble, oxygen demanding organics;

2) soluble substances that cause tastes and odors in water supplies;

3) color and turbidity;

4) nutrients such as nitrogen, phosphorus, and carbon;

5) toxic organic and inorganic substances;

6) refractory materials;

7) oil, grease, and immiscible liquids;

8) acids and alkalis;

9) substances resulting in atmospheric odors;

10) suspended solids; and

11) dissolved solids.

Monitoring for purposes of leachate characterization should be sufficient to provide data adequate to facilitate decisions on the best approaches to leachate treatment/disposal. Requirements for monitoring of effluents from treatment operations prior to discharge must be rigorous enough to permit assessment of the quality of the discharge so as to assure a minimum of environmental degradation and compliance with governmental regulations.

The selection of parameters for other monitoring objectives need only be rigorous enough to assure that effluent quality can be maintained within discharge permit specifications. It is in this latter area that the opportunity exists to use relatively inexpensive analyses, and indicator and surrogate parameters to obtain quick and accurate information which can be used to control treatment processes and disposal site operations. For example, TOC (total organic carbon) provides a rapid, relatively inexpensive measure of gross organic content of an aqueous stream. Such a measurement may be sufficient for many purposes as opposed to more expensive organic compound identification measures.

Parameters which should be considered for inclusion in hazardous waste leachate monitoring program are as follows:

1. temperature;

2. electrical conductivity;

3. turbidity;

4. settleable solids;

5. suspended solids;

6. total dissolved solids;

7. volatile solids;

8. oils, greases and immiscible liquids;

9. odor;

10. pH;

11. Oxidation Reduction Potential (ORP);

12. acidity;

13. alkalinity;

14. Biochemical Oxygen Demand (BOD);

15. Chemical Oxygen Demand (COD);

16. Total Organic Carbon (TOC);

17. specific organic compounds;

18. heavy metals;

19. other specific inorganic compounds;

20. nitrogen and phosphorus compounds;

21. dissolved oxygen;

22. volatile organic acids;

23. flow; and

24. toxicity.

Selection of a particular parameter set will be dependent upon monitoring objectives as well as upon factors specific to a given site and leachate management program. Different parameter sets might be chosen to support leachate characterization efforts than for purposes of treatment process operation or for effluent discharge monitoring. As an example, TOC measurements may be more reasonable than BOD measurements for hazardous waste leachate characterization and process control purposes since the TOC measurement is rapid and the leachate may be toxic to the organisms necessary to conduct of the BOD test. On the other hand, the BOD test would provide more information on the biodegradability of the leachate. Thus, parameters must be chosen judiciously for the specific purpose and situation.

Additional information on monitoring parameters can be found in tests and handbooks (1, 2).

### 7.2.2 Analytical Considerations

Good analytical procedures are vital to an effective monitoring program. Basic references for wastewater analytical procedures are contained in the EPA Methods for Analysis of Water and Wastes (3), Standard Methods (4), ASTM Standards (5), the EPA Handbook for Analytical Quality Control (6) and other EPA guidance documents (7, 8, 9). The reader is referred to these basic reference works for details since a thorough discussion of analytical procedures is beyond the scope of this document.

Often, there is a choice among several standard methods for measurement of a particular parameter. Among the factors to be considered in selection of an analytical method are:

- sensitivity, precision and accuracy required;
- interferences;
- number of samples to be analyzed;
- quantity of sample available;
- other determinations to be made on the sample;
- analytical turn-around time; and
- analytical costs.

Since leachate is a complex system of variable composition, there is high potential for numerous interferences in many of the chemical and biological determinations. This aspect should be given particular attention when selecting an analytical method.

### 7.2.3 Sampling

Proper sampling is critical to any monitoring program since the validity of analytical results relies upon the validity of the samples analyzed. In order to assure valid samples, attention must be paid to obtaining samples which are truly representative of the waste stream. Moreover, proper sampling techniques must be employed. Finally, the integrity of the sample must be maintained from the time of sampling to the time of testing. This time interval should be kept to a minimum; even then certain types of samples must be preserved through addition of chemical agents or refrigeration.

Methods and equipment used for sampling will vary with the waste stream and the sampling purpose. The reader is referred to the following sources for sampling protocols: Samplers and

Sampling Procedures for Hazardous Waste Streams (10) and Test Methods for the Evaluation of Solid Waste, Physical/Chemical Methods (11). Other sources (4,5) also provide useful information on sampling. Ideally, leachate samples should be analyzed immediately after collection for maximum reliability of the analytical results. Leachates are such complex mixtures that it is difficult to predict precisely the physical, biological, and chemical changes that occur in the samples with time. After sample collection, pH may change significantly in a matter of minutes, sulfides and cyanides may be oxidized or evolve as gases; and hexavalent chromium may slowly be reduced to the trivalent state. Certain cations may be partly lost as a result of adsorption to the walls of sample containers. Microorganism growth also may cause changes, and volatile compounds may be lost rapidly.

In many cases, the undesirable changes described above may be minimized by refrigeration of samples at 4° C, or by the addition of preservatives. Refrigeration may deter the evolution of volatile components and acid gases such as hydrogen sulfide and hydrogen cyanide, but some salts precipitated at the lower temperature may not redissolve when warmed for analysis, thus causing error in determining the actual concentrations of dissolved sample constituents. Preservatives may retard biochemical changes; other additives may convert some constituents to stable hydroxides, salts, or compounds. Compounds may be converted to other forms (such as the products of nitration, sulfonation, and oxidation of organic components). Upon subsequent analyses, the results may not reflect the original identity of the components.

Thus, both advantages and disadvantages are associated with the refrigeration and/or addition of preservatives or additives to waste samples. Various methods of preservation for specific tests on selected constituents are given elsewhere (4,10). When more than one specific test is to be run on a sample, it may be necessary to divide the sample and preserve each subsample by a different method.

Adequate record keeping and use of proper sample containers also are important aspects of a good sampling program. As a general rule, a detailed sampling plan should be developed prior to any sampling operations.

## 7.3 LEACHATE CHARACTERIZATION

### 7.3.1 Wastes Received

RCRA regulations require an owner/operator to obtain a detailed chemical and physical analysis of a representative sample of a waste before placement into a disposal site. Moreover, the facility operator is required to maintain a record of the quan-

tity and location of each hazardous waste placed in the disposal site.

From a leachate management point of view, this type of data may be useful in predicting future leachate composition at new sites. However, it may be several years before a leachate is collected. Therefore records maintenance is important.

Formalized procedures should be used to file manifests and analytical results. It may be useful to keep running inventories according to specific compound types, and total quantities disposed for each. In this way, predictions of leachate generation would be facilitated.

### 7.3.2 In-situ Monitoring

There are a number of questions which can be answered using in-situ monitoring: 1) what mechanisms are involved in waste modification as the leachate migrates through the disposal site and previously disposed materials; 2) at what rate and in which direction does the leachate move; 3) how do compounds and their concentrations vary with depth and time; 4) are any off-gases evolved; and 5) what factors influence movement and concentrations?

In-situ monitoring could be incorporated within the leachate collection system. Sampling points should be designed to provide a representative picture of waste movement and degradation throughout the site. If the site is compartmentalized, then the monitoring should be representative for each cell or separate disposal area.

Emrich and Beck (12) have discussed methods used to evaluate closure and monitoring plans for a hazardous waste disposal site. Some of these methods may be useful in conjunction with in-situ monitoring. Suction lysimeters and pan lysimeters were used to determine moisture movement. With some modification, these methods might be adaptable to in-situ monitoring.

### 7.3.3 Collected Leachate

The leachate collection system will be a key monitoring location. Because leachate composition is expected to vary with time in terms of types and concentration of compounds, analyses of collected leachate will serve to define the unit operations used for treatment and their operating ranges. Hence, collected leachate characterizations are expected to be useful in making treatability assessments of process alternatives and in defining specific unit operations and their operating ranges.

Collected leachate characterizations also provide a baseline for evaluating treatment effectiveness. Coupled with

effluent analyses, this would provide an assessment of removal efficiencies for individual unit operations as well as the overall treatment chain.

## 7.4 TREATMENT EFFLUENT MONITORING

### 7.4.1 Sampling Locations

Sampling and analysis of collected leachate serves as the measure of leachate treatment plant influent. Where there are several monitoring points in the leachate collection system because of the size of the disposal site, or because of compartmentalization, the point closest to the treatment plant should be used. In this way, aggregated flow and composition will be most representative of the influent baseline.

Previous sections have noted that leachate probably is not amenable to treatment by a single unit process. Instead, treatment probably will include several unit operations. Individual unit operations should be monitored separately to facilitate optimized operation. For example, granular activated carbon adsorption may be used prior to biological treatment in order to remove toxic constituents which could impair biological treatment effectiveness. Hence, it would be necessary to monitor carbon-treated effluent to prevent biological upset. Therefore, monitoring at each major point in the treatment chain is strongly suggested. Moreover, the analytical techniques selected for such monitoring should have rapid turn-around times to enable timely process control decisions.

### 7.4.2 Parameters

Experience shows that it is infeasible to analyze all parameters of concern at frequent intervals. Rigorous analysis of complex organic and inorganic constituents simply is too costly to sustain at frequent intervals. As a result, an attempt should be made to identify surrogate measurements or indicator parameters which can be used inexpensively to gage treatment effectiveness. For organic constituents, such a surrogate parameter could be total organic carbon (TOC). Another less well developed method could be thin layer chromatography (TLC). Similarly, for inorganic constituents selected indicator metals could be analyzed using common spectrophotometric techniques.

It is recommended that such surrogates or indicators be identified using inventory information to predict likely compounds which are expected to appear in the collected leachate. Further refinements potentially could be made in conjunction with treatability studies if they are anticipated.

It also may be possible to use biological toxicity tests to determine process effectiveness. Procedures are evolving which

offer potential for evaluating residual toxicity subsequent to individual treatment operations. Although such procedures do not measure specific parameters or surrogates directly, judgments can be made regarding treatment capabilities by inference.

Thus, indicators and surrogate parameters permit cost-effective process control. However, more costly analysis using rigorous and sophisticated analytical methods will be required periodically for process refinement, and for detailed assessment of overall treatment effectiveness. The rigorous analytical techniques could include gas chromatography/mass spectrometry (GC/MS), atomic absorption (AA), x-ray fluorescence (XRF), or other refined methods.

The frequency of the more sophisticated analytical methods will be dependent upon the types and concentrations of compounds in the leachate, their amenability to removal, mode of discharge, flow rates, and concentration and flow variability. Costs also will be an important determinant. Rigorous analyses also should be used to monitor any significant changes either in unit operations employed or for changes in operating procedures. Once equilibrium operation is achieved, it may be appropriate to schedule rigorous analysis at regular intervals.

### 7.4.3 Data Analysis

Detailed performance records should be maintained for unit and overall treatment operations. A thoughtful protocol should be developed in advance of treatment plant start-up. Where necessary, sufficient data should be obtained to define key process control parameters. In some cases, statistical correlations could be used to insure that process interactions are appropriate. For example, it might be possible to identify TOC levels which are required for downstream operations to function optimally.

### 7.4.4 Process Optimization

Because leachate is characterized by expected variability in flow, types of compounds, and concentrations, process optimization is envisioned as an ongoing task. Detailed analysis using sophisticated measurement techniques will be used for this purpose. As mentioned earlier, process refinement is one of the principal functions of detailed analyses. Attempts should be made to verify the correlation of surrogate parameters with detailed actual parameter measurements. In this way, process optimization need not wait until detailed analyses are made.

### 7.4.5 Safety Considerations

Site operators must be aware that the function of many treatment unit operations is to concentrate hazardous leachate

constituents. Therefore, detailed safety considerations are essential. Moreover, in-plant monitoring should be provided to discover the existence or evolution of hazardous materials. For example, it is possible that volatile organics will be stripped from biological treatment systems, or that gassing can occur within granular carbon columns. Hence, in-plant monitoring systems should be installed, and employees thoroughly trained for emergencies. These plans should be in-place well before initiation of treatment operations.

## 7.5 REFERENCES


1. Sawyer, C.N. and P.L. McCarty. Chemistry For Sanitary Engineers. McGraw-Hill, Inc. New York, New York, 1967. 518 pp.

2. U.S. Environmental Protection Agency. Handbook for Monitoring Industrial Wastewater. U.S. Environmental Protection Agency, Technology Transfer, Nashville, Tennessee, 1973.

3. U.S. Environmental Protection Agency. Methods for Analysis of Water and Wastes. EPA-600/4-79-020, U.S. Environmental Protection Agency, Cincinnati, Ohio, 1979.

4. American Public Health Association, American Water Works Association and Water Pollution Control Federation. Standard Methods For the Examination of Water and Wastewater, 15th Edition. Washington, DC. 1193 pp.

5. American Society For Testing and Materials. 1980 Annual Book Of ASTM Standards, Part 31, Water. Philadelphia, Pennsylvania, 1980. 1401 pp.

6. U.S. Environmental Protection Agency. Handbook for Analytical Quality Control In Water and Wastewater Laboratories. U.S. Environmental Protection Agency, Technology Transfer, Cincinnati, Ohio, 1972.

7. U.S. Environmental Protection Agency. Hazardous Waste and Consolidated Permit Regulations, Federal Register, Volume 45, No. 98, May 19, 1980.

8. U.S. Environmental Protection Agency, Effluent Guidelines Division. Sampling and Analysis Procedures For Screening of Industrial Effluents For Priority Pollutants. U.S. Environmental Protection Agency, Washington, DC, March 1977, revised April 1977.

9. Guidelines Establishing Test Procedures For the Analysis of Pollutants: Proposed Regulations. Federal Register, Volume 44, No. 233, pp. 69464-69575. December 3, 1979.

10. deVera, E.R., B.P. Simmons, R.D. Stephens, and D.L. Storm. Samplers and Sampling Procedures For Hazardous Waste Streams. EPA-600/2-80-018, U.S. Environmental Protection Agency, Cincinnati, Ohio, 1980.

11. U.S. Environmental Protection Agency, Office of Solid Waste. Test Methods for the Evaluation of Solid Waste, Physical/Chemical Methods. SW-846. U.S. Environmental Protection Agency, Washington, DC.

12. Emrich, G.H. and W.W. Beck, Jr. Top-Sealing to Minimize Leachate Generation Case Study of the Windham, Connecticut Landfill. In: Proceedings of U.S. EPA National Conference on Management of Uncontrolled Hazardous Waste Sites, Washington, DC, October 1980. pp. 135-140.

# SECTION 8

# OTHER IMPORTANT CONSIDERATIONS

## 8.1 SAFETY

Hazardous waste leachate management operations will vary widely in complexity. Moreover, the compounds and associated hazards will differ from site to site. The following discussion outlines safety considerations which apply to the general case. The purpose is to provide guidance to the leachate manager in development of a safety program for a particular site.

### 8.1.1 Degree of Risk

Safety considerations will vary dependent upon the degree of risk involved for plant personnel. Handling of hazardous materials is inherently dangerous; however, some areas and functions may constitute a higher degree of risk than others. For example, sampling in an area where volatile organics may be evolved is more dangerous than working in a treatment plant control room. Similarly, handling residues may be more dangerous than handling raw leachate, simply because the hazardous materials are more concentrated in the residues.

Therefore, it is necessary to identify safety procedures and protective measures commensurate with the risk involved. Prior to facility start-up, a thoughtful assessment of risks should be made for each work area and job function. Because it would be confusing and burdensome for workers to adjust for each and every work situation, safety procedures should be devised for general levels of risk. A major chemical manufacturer uses a classification system to categorize risk levels. This system is described by Morton (1).

Procedures should be established for reviewing and reclassifying degrees of risk based upon plant experience, and information secured through the literature.

### 8.1.2 Restricted Entry

The entire disposal site area should be fenced and posted. Entry should be granted only to authorized personnel. Security patrols could be used at night to prevent intruders from gaining access and to check all work stations at regular intervals.

Arrangements should be made between plant security and local police and fire departments to provide rapid backup in the event of emergencies.

Within the restricted plant area, entry to dangerous areas should be limited to those personnel directly related to specific operations. For example, office workers need not be granted entry into processing areas.

Specified clean areas could be provided within the plant and safeguards taken to insure that the clean areas remain uncontaminated. Generally, clean areas will include office and administrative areas, lunchrooms, lounges, and restrooms for non-operating personnel. Access to the clean areas should be through a changeroom. Moreover, operating employees should be encouraged to shower before leaving plant premises.

### 8.1.3 Safety Rules

It is important that safety rules be communicated to all employees, and adherence to these rules be strictly enforced. Morton (1) has presented a comprehensive list of general plant safety rules which is directly applicable to hazardous waste management facilities.

All employees should be trained in safety with more detailed instruction given to those in processing operations. Safety meetings at regular intervals are recommended. These meetings should be designed for small groups and emphasize specific operating problems.

Certain plants which handle hazardous materials have minimum age limitations for employees. In some cases, individuals younger than 18 years old are not permitted on the site.

Some plants do not allow employees to work alone in processing areas. Backup personnel should be available at all times for emergency evacuation of work stations.

Two key rules applied at hazardous waste management facilities are: 1) all employees must remove protective clothing and wash thoroughly before breaks and lunch, and 2) illness must be communicated to supervision immediately, even after normal working hours.

### 8.1.4 Supervision

Effective supervision is crucial to worker safety. Supervisors must be firm and consistent in their enforcement of safety procedures. No workers should be without supervision for more than two hours. Management should hold plant supervisors

accountable for plant safety and security. Furthermore, supervisors should be well trained for all contingencies.

### 8.1.5 Inspections

Designated personnel should conduct safety inspections at regular intervals. Formalized checklists should be used, and fixed procedures should be in place to rectify deficiencies within 24 hours. In the event a deficiency poses an imminent danger, work functions in the area should be terminated and the area cordoned off until the deficiency is corrected.

### 8.1.6 First Aid and Medical Assistance

Employees who work in processing areas should have a baseline medical examination upon hiring, and should have periodic examinations at regularly scheduled intervals. Workers at pesticide handling facilities often have a cholinesterase baseline level established in conjunction with their initial examination.

Selected plant personnel should be trained in first aid procedures related to the types of risks to which the employees are exposed. First aid treatment should be available at all times.

Medical assistance also should be available both on an emergency basis and for chronic problems. Medical personnel should be contacted in advance of problems to be informed about the types of materials to which employees may be exposed. Moreover, they should be given information on the behavior and nature of materials. Emergency plans should be worked out in detail prior to plant startup, if possible.

### 8.1.7 Protective Equipment

Processing and laboratory areas should be equipped with emergency showers and eyewashers. These should be tied to an alarm system so that co-workers can come to the aid of potentially contaminated workers. Face-shields, safety shoes, safety glasses, gloves, aprons, coveralls, hard hats, and shoe covers should be provided to workers whose jobs require varying degrees of protection.

Full suit protection should be provided for particularly hazardous tasks, and for emergency evacuation operations. Respiratory protective devices usually are used in conjunction with situations requiring full suit protection. There are three basic types of respiratory protective devices: 1) air-purifying respirators, 2) supplied-air respirators, and 3) self-contained breathing apparatus. The type used is dependent upon the degree of hazard involved.

Acid suits consisting of a rubber coat, rubber pants, acid gloves, rubber boots up under the pants, and a rubber acid hood should be available in the event of line breaks or leaks under pressure. Similarly, such equipment may be used for repair operations.

All protective clothing and equipment must remain on-site. It should be decontaminated before reuse. Reusable clothing is more durable and is preferred. Appropriate washing procedures should be used to insure complete decontamination.

Protective equipment should be accessible in all work areas where contamination may be encountered so as to permit safe exit in an emergency.

### 8.1.8 Ventilation

Adequate ventilation of work spaces is required to prevent harmful exposure to toxic materials. Morton (1) stated that exposures are related to threshold limit values (TLV) based upon a time-weighed concentration for a normal workday. The TLV is the level at which workers can be exposed daily without harmful effect. Furthermore, a "ceiling" value is established which should not be exceeded under any circumstances. Although exposures above the TLV up to the ceiling value are undesirable, they can be permitted as long as an overall time-weighed average (usually for an eight-hour day) is not exceeded.

Ventilating system design should account for work areas where there might be accumulation of volatile organics or hazardous dust. Air exchange rates will be based upon industrial hygiene ventilation parameters.

Monitoring to assure that there is satisfactory ventilation can be performed using a number of sampling instruments. Weiby and Dickinson (2) described the major factors in specifying instruments for monitoring work areas as instrument specificity, operational range, accuracy, response time, and special features. In a companion article, Herrick (3) discussed the following topics: portable instruments, electrolytic cell detectors, flame ionization detectors, catalytic cell detectors, and signaling alarms. The reader is encouraged to consult these references for detailed consideration of work area monitoring.

Because toxic fumes may be evolved in some sample handling and analytical procedures, hoods should be provided in laboratory areas. In certain cases, air cleaning equipment may be necessary for air exhausted from the hood.

### 8.1.9 Housekeeping

Good housekeeping is an adjunct to any safety program. For the leachate treatment facility, it is especially important to keep work areas clean and free from obstructions. Spills should be cleaned up immediately, and resultant residues disposed safely. Exposed areas and walkways should be kept ice-free to reduce possibilities for falls.

## 8.2 CONTINGENCY PLANS/EMERGENCY PROVISIONS

Much of the following discussion is not limited to leachate management alone but applies to hazardous waste management operations in general. The intent of the discussion is to provide the leachate manager with information sufficient to enable development of contingency/emergency plans tailored to a given site operation. Part VII of the Hazardous Waste and Consolidated Permit Regulations also contains useful guidance information on contingency/emergency plans.

### 8.2.1 Emergency Situations

#### 8.2.1.1 Natural Disasters--

Development of contingency plans for natural disasters is substantially different than for accidents. Accidents require action to address an incident which already has occurred, whereas planning for natural disasters usually is designed to prevent problems. Developments in predictive meteorology and hydrology permit advanced warning of hurricanes, tornadoes, and floods. However, sometimes the warning period is limited. On the other hand, earthquake planning involves other kinds of considerations.

The thrust of contingency planning for natural disasters is to shut down plant operations, prevent escape of contamination to the environment, and safeguard plant equipment. Preventive measures can be designed into the plant. For example, berms and dikes can be built to prevent inundation of water from flooding. Moreover, these measures can be designed to mitigate events based upon historical data, e.g., 100-year floods. Similarly, structures can be designed to mitigate damage from earthquakes. State of California building codes have been devised to guide those who build in high risk areas.

Plan development should include natural disaster considerations for areas known to be subject to possible problems. Site operators should devise procedures for determining when such risks exist by designating specific responsibilities for communication with the National Weather Service, the U. S. Geological Survey, or other agencies having early warning systems.

Furthermore, clear decision responsibility for determining when to shut down and take protective measures should be in place.

In the event that preventive measures are unable to handle the event because of its magnitude, i.e., a tornado "direct hit" or a flood beyond design criteria, emergency actions similar to those formulated for accidents should be planned for.

8.2.1.2 Accidents--

Accidents include fires, explosions, leaks, and spills. Although bomb threats can be handled by shutdown and subsequent searches, actual sabotage will have to be dealt with in the same manner as accidents.

Because of the dangers inherent in fires and explosions, a separate subsection of this manual will be devoted to fire protection. Spills and leaks will be discussed within the context of contingency planning.

8.2.2 Plan Development

8.2.2.1 Organizational Responsibilities--

The most important aspect of an effective contingency plan is clear definition of responsibilities for execution. Plant management must be fully involved, and it is highly desirable to have a company officer be responsible for insuring plan execution. The chain of command should be specified in advance, along with delegation of authority and backups where needed. A job description for each responsible party should be incorporated in the plan.

8.2.2.2 Plan Components--

In addition to in-house contingency plans, it is expected that hazardous waste disposal sites will be required to file a Spill Prevention Control and Countermeasure Plan (SPCC) with their state water pollution control agency. Components of a typical plan include:

- responsible officials names, addresses, telephone numbers;
- facility location and site map;
- potential spill dangers, pathways, remedial measures;
- past spill frequency;
- sources of assistance (e.g. emergency fire, cleanup contractors);

- legally required reporting requirements (names, telephone numbers);
- schedule for installing mitigating devices;
- materials inventory; and
- inspection procedures.

Further descriptions of contingency plan components follow.

8.2.2.2.1 Implementation Manual--Because rapid action and thoroughness is essential in emergencies, a detailed implementation manual should be prepared to cover all expected contingencies. However, it must contain some degree of flexibility because the unexpected will normally occur. Steps for response should be written down and understood by all who are expected to participate. Not only should all the components of the plan be listed, but also the sequence of actions to be executed. The information which follows generally is arranged in the order of execution. Furthermore, once the manual is prepared, it should be reviewed and updated at regular intervals.

8.2.2.2.2 Alarm Systems--The first step in plan execution is an alarm system to indicate that an emergency has occurred. The primary purpose of the alarm system is to enable rapid evacuation of affected areas. A secondary but equally important purpose is to initiate the emergency response plan.

8.2.2.2.3 Communications Network--When an alarm signals an emergency condition, on-site personnel should begin response actions, and all appropriate contacts for assistance made. The responsible company official should be notified first. It is suggested that a telephone "tree" be activated so that all entities and agencies be notified as quickly as possible. The priority of notification will be dependent upon the nature of the emergency. For example, if a fire or explosion is involved, the local fire department and medical assistance teams should be called first. A log of telephone calls made and actions taken should be maintained. This log should be signed and witnessed.

The contact list should be part of the manual and should include: plant management and supervision; fire, medical, and police personnel; local, state, and federal governments; and surrounding population if evacuation is envisioned. Manuals should specify the person to be called and their telephone numbers. Alternate names and numbers should be provided in the event the primary contact cannot be reached.

8.2.2.2.4 Execution Checklist--During the period when plant management is on the way to the scene, fire and medical assistance is enroute, and contacts are being made, on-scene person-

nel should be executing the contingency plan using a prepared checklist of actions. The checklist is part of the emergency implementation manual discussed above.

8.2.2.2.5 Personal Injury--The first priority of the plan is to attend to those injured in the incident. Next in priority is to prevent further injuries from occurring. Injured persons should be removed from contaminated areas and administered first aid until medical assistance arrives.

8.2.2.2.6 Information Assistance--There are a number of excellent information sources which can be used to assist in accidents involving hazardous materials. The Chemical Transportation Emergency Center (CHEMTREC) can provide help in determining the nature of hazards involved, and in providing expert assistance on how to manage the situation. The CHEMTREC emergency number is (800) 424-9300. It is operational 24 hours a day. The National Poison Control Center (telephone (502) 589-8222) is available to provide help where there is personnel exposure to toxic materials.

EPA operates OHM-TADS (Oil and Hazardous Materials Technical Assistance Data System) which is a potential source of useful information on the materials involved. A similar system of the U. S. Coast Guard is CHRIS (Chemical Hazard Response Information System). It too can provide data on the materials involved. Both of the systems can be accessed in emergencies through the National Response Center, telephone (800) 424-8802.

The National Fire Protection Association handbook entitled, "Fire Protection Guide on Hazardous Materials" is a valuable resource to have on-site to guide fire protection activities. "Dangerous Properties of Industrial Materials" by N. I. Sax (5th ed., 1979, Van Nostrand Reinhold Co.) also is a very valuable resource. Long a standard in the field of industrial hygiene, this excellent book is extremely useful in dealing with hazardous materials because it is a single, quick, up-to-date, concise hazard analysis informative guide to nearly 13,000 common industrial and laboratory chemicals.

Most of the above information resources were devised for response to transportation accidents where the compounds involved are not known in advance. Because the hazardous waste disposal site will have knowledge of what materials are accepted, and presumably an inventory of these materials, it should be possible to utilize information sources in advance of an emergency, and include response and toxicity data in the implementation manual for each chemical handled. Every effort should be made to do so.

8.2.2.2.7 Plant Shutdown--Early warning of possible natural disasters (e.g., hurricanes, tornadoes, and floods), will dic-

tate plant shutdown procedures. Time allowed for execution of shutdown orders will be specified by emergency warning agencies.

For an accident situation, only certain portions of the plant might be shut down if the emergency is contained within a restricted area. The decision of whether to shut down, and how much of the plant is affected is the responsibility of the plant management in charge of plan execution.

8.2.2.2.8 Press and Media Contact List--An emergency at a hazardous disposal site is certain to generate public apprehension. The plan should provide for press conferences and debriefings. After the emergency is under control, a company official should contact a list of news media personnel to provide a statement of the nature of the emergency, the actions taken, and current status. The purpose should be to give factual information so that misinformation will not mislead concerned citizens in the plant locale.

8.2.2.2.9 Incident Documentation--The incident should be documented fully for several purposes. Documentation will permit post-facto review of whether the plan was executed as expected. Also, it can be used to correct problems and thus avoid similar future incidents. Finally, it can serve as a legal record of what happened.

8.2.3 Fire Protection

8.2.3.1 In-Plant Measures--

8.2.3.1.1 Fire Extinguishers--Fire extinguishers should be located at strategic points throughout the plant. Extinguishers should be readily accessible, and plant personnel should be trained in their use. The type of extinguisher used is dependent upon the likely kinds of fires that may be encountered. For example, dry chemical and carbon dioxide extinguishers usually are preferred in laboratory areas where water may react with burning chemicals.

8.2.3.1.2 Sprinkler Systems--Sprinkler systems should be installed in compliance with local and state building and fire protection codes. Testing of the sprinkler systems in conjunction with plant safety inspections is good practice. Just as water extinguishers are inappropriate for certain locations, sprinklers may not be useful in certain plant work areas. Disposal site operators should consult with loss and fire prevention specialists regarding the best approach for their plant. Often casualty insurance companies will provide expert assistance to their clients as a service, and in order to assess risks for premium determinations. Site operators should explore using this resource.

8.2.3.1.3 Use of Plant Security Personnel--Plant security personnel likely will be on the scene of a fire shortly after discovery. They should be trained to deal with the fire on a "first response" basis, and should be responsible for notifying trained in-plant fire fighters and the local fire department.

8.2.3.2 Training--

8.2.3.2.1 Local Fire Department--Plant operating and management personnel should meet with the local fire department to inform them of the types of materials on site and to give them information on the hazards which may be involved with such materials in the event of fire (including an explosion). It would be a good idea to have fire department officials visit the plant to familiarize them with its layout, the location of high risks areas, and to inspect fire protection capabilities on-site.

The local fire department could conduct training exercises using some of the actual materials which potentially could be involved. Furthermore, selected plant personnel could participate in these exercises preparatory to the formation of an emergency squad composed of fire department personnel and a few selected plant employees.

8.2.3.2.2 Emergency Squad--Based upon potential fire hazards which are evident at the disposal site, it is good practice to form an emergency squad trained for the specific purpose of dealing with known and anticipated hazardous materials. Often the emergency squad is comprised of a select crew from the local fire department and several well-trained plant employees. The reason for including plant employees is so they can begin emergency operations immediately, prepare for the arrival of the local fire department, and guide the fire fighting effort because of their intimate knowledge of the plant.

In addition to normal fire fighting, the emergency squad is responsible for rescue operations, evacuation of injured or threatened personnel, and escalation decisions in the event of broad involvement in the disposal site. This group should receive specialized training in advance (e.g., use of self contained breathing apparatus, boom deployment).

8.2.3.3 Hazards Identification--

The National Fire Protection Assocation (4) has devised a system for identifying the inherent hazards of certain chemicals and the order of severity of these hazards under emergency conditions such as spills, leaks, and fires. A section of the NFPA manual, "Fire Protection Guide on Hazardous Materials", provides hazardous chemicals data. There are four categories of data provided: health, flammability, reactivity, and other unusual conditions. For the first three categories, a numbering system

has been devised to inform fire fighting personnel about protecting themselves and how to fight fires where the hazard exists. In the fourth category, special considerations are indicated. For example, fire fighters are alerted to possible hazards where there may be unusual reactivity with water and oxidizing chemicals are noted. It would be beneficial to identify the materials potentially involved in advance so that fire protection measures can be incorporated within the contingency plan and the implementations manual. Moreover, emergency squad training can proceed using identified materials.

## 8.3 EQUIPMENT REDUNDANCIES/BACKUP

### 8.3.1 General Discussion

Because a leachate treatment plant will use unit operations similar to those employed at municipal and industrial wastewater treatment plants, certain reliability considerations also are similar. EPA has issued minimum standards of reliability for mechanical, electric, and fluid systems and components which may be applicable for leachate treatment plants (5). Manual users are referred to these criteria for details.

There is a question, however, of whether the need for redundancy is as great for hazardous waste leachate treatment systems as for municipal and industrial systems. In the latter cases, it is difficult to shut-off or divert flow during emergencies, shutdowns, or repair. Frequently, considerable flows are involved, and the option of storage is economically infeasible. On the other hand, leachate flows generally will be low. As a result, storage possibly could be a cost-effective substitute for certain redundant and backup systems. Therefore, during leachate treatment plant design, costs of redundant and backup systems should be balanced against costs for building storage for raw leachate. Further considered in design should be: estimated volume of incoming wastes, estimated flow of leachate, projected time periods for outages or emergencies, tankage costs, and redundant system costs.

In general, there are two locations at which storage might be required: collected leachate, and treated leachate. Some storage might be designed into the plant for purposes of equalizing flows in any case. Because concentrations of materials will be different at each location,separate storage would be required.

Nevertheless, attention should be given to important equipment considerations related to redundant and backup conditions. Discussion on these items is found in the subsequent subsection.

### 8.3.2 Equipment

#### 8.3.2.1 Control Systems--

The plant control room should have redundant emergency alarms. Frequent practice is to couple display warning lights with an annunciator sound alarm. All electrical controls should have manual overrides. Electric failure backup systems will be discussed separately.

#### 8.3.2.2 Tanks and Containers--

Tanks should be fitted with gravity overflow piping in the event that pumps fail to shut off. Tank areas should be on concrete pads, if possible, with curbs and walls sufficient in height to contain leaks, spills, or tank failures. Additionally, spare tanks should be used to empty the curbed area if other storage is unavailable.

All containers in processing areas should have plugs in place when not being used.

#### 8.3.2.3 Pipes and Transfer Lines--

For pipes that convey hazardous materials, failsafe transfer lines should be used. Such failsafe systems measure incoming flow and discharge flow. Assuming no intervening taps, the two flows are compared. A difference noted will trip an alarm. Differences of greater than 0.5 percent commonly are used to indicate a leak.

Pipes should be color-coded to avoid cross connections, and to permit easy location.

#### 8.3.2.4 Valves--

Pressure relief valves should be used wherever necessary. All valves should be located as close as possible to the source in the event they must be operated during an emergency. However, the valves should be accessible if an emergency occurs. Emergency shut-off valves should be placed on all gravity transfer lines.

#### 8.3.2.5 Pumps--

It is good practice to locate pumps outside if possible. This reduces the possibility of being rendered inoperable due to fires or explosions. It is required in areas where there may be a build-up of potentially explosive gases.

Back-up pumps may be desirable where needed to move leachate to storage during emergencies. Portable pumps are

desirable to have on hand in emergencies.

8.3.2.6 In-Plant Drainage--

Leaks and spillage from equipment should be collected within the plant and returned to the appropriate unit process. Typically, leaks and spillage can be controlled by dikes, berms, and curbs.

8.3.2.7 Electrical Failures--

Emergency lights on battery packs are recommended for all plant areas. Operators should judge the potential damage resulting from an extended electrical outage. It may be cost-effective to install an emergency back-up generator dependent upon the number of critical functions involved.

8.3.2.8 Maintenance and Repair--

Wherever possible, preventive maintenance should be scheduled so that redundancy and back-up are unnecessary. This can be done during scheduled shutdown. If major repairs can be deferred, they also should be performed at that time, i.e., during scheduled shutdowns.

## 8.4 PERMITS

### 8.4.1 Consolidated Permit Regulations

In conjunction with issuance of final rules for the federal hazardous waste management program (Federal Register, May 19, 1980), the U. S. Environmental Protection Agency established rules for a consolidated permit program. The rules governed programs authorized by the following legislation: Resource Conservation and Recovery Act (RCRA), Underground Injection Control (UIC) under the Safe Drinking Water Act (SDWA), the National Pollutant Discharge Elimination System (NPDES) under the Clean Water Act (CWA), State dredge and fill (404) provisions of the CWA, and Prevention of Significant Deterioration under the Clean Air Act (CAA). There are three primary purposes of these rules:

> "1. To consolidate program requirements for the RCRA and UIC programs with those already established for the NPDES program.
>
> "2. To establish requirements for state programs under the RCRA, UIC, and Section 404 programs.
>
> "3. To consolidate permit issuance procedures for EPA-issued Prevention of Significant Deterioration permits under the Clean Air Act with those for the RCRA, UIC, and NPDES programs."

The rules are complex and require substantial effort in order to enable complete and thorough preparation of permits. Manual users are urged to consult documents intended by EPA to clarify and define permit application requirements.

Responsibilities for state program requirements also are specified by the EPA rules and regulations. Although flexibility is allowed in how states implement these requirements, and they are free to impose more stringent controls, EPA has specified minimum requirements consistent with RCRA provisions.

Permit officials and site operators should recognize that certain aspects of the consolidated permits are ill-defined relative to hazardous waste leachate treatment. NPDES requirements for direct discharge of treated leachate to receiving waters need to be defined in greater detail. Furthermore, if treated leachate is to be discharged into a POTW system, no guidance has been provided relative to pretreatment requirements. There is a crucial need for defining such requirements in greater detail. As a point of departure, permit officials might deal with leachate treatment plant effluent in a manner similar to that for the chemical manufacturing industry, both organic and inorganic segments. Also, many cities are now in the process of developing pretreatment requirements for discharge of heavy metals, cyanide, phenols and other toxic compounds into POTWs.

### 8.4.2 Other Permits

There are several other areas which manual users should consider in assuring that site operations conform with governmental plans and regulations. Water quality aspects should be factored into areawide waste treatment management plans (section 208), and facility planning efforts (Step I). This is especially important where direct discharge or discharge to POTWs is envisioned. Other areas of concern are zoning requirements and local building permits.

## 8.5 PERSONNEL TRAINING

Training is envisioned for personnel engaged in the following four functional areas of leachate treatment facilities: operations and maintenance, safety, emergency response, and security. Training related to safety and emergency response has been discussed earlier in this section, and as a result, will not be repeated here.

The basis for operations and maintenance training should be a well-conceived O&M manual. During training, personnel should be acquainted with key operating parameters, acceptable

operating ranges, problem diagnosis, troubleshooting, repair procedures, preventive maintenance, and shutdown procedures. An example of a suggested guide for development of an O&M manual for conventional waste treatment facilities is shown in Table 8-1. Obviously, a manual for a leachate treatment plant would have to be modified to reflect the processes used, and incorporate provisions germane to the handling of hazardous materials. The table does, however, provide a good starting point for structuring an O&M manual.

Security personnel should be trained not only to prevent unauthorized entry into the plant, but also in first aid, emergency communications and first response measures, essentials of spill containment, and some fire fighting as appropriate.

Training should be conducted upon hiring, and should be updated at regular intervals. Consideration should be given to sending key personnel to formal off-site training courses and seminars.

## 8.6 SURFACE RUNOFF

Disposal sites should be designed so that stormwater is diverted away from and around the site. This can be accomplished through grading and the use of berms and dikes. Hence, this subsection addresses only the fate of precipitation falling directly within the disposal site. Four options exist for dealing with stormwater runoff, dependent upon the degree of contamination: 1) route uncontaminated flow to a holding or storage pond from which discharges can be made to surface water courses; 2) route mildly contaminated runoff to the same holding or storage area, and treat prior to discharge; 3) route contaminated runoff to the leachate treatment plant; and 4) place heavily contaminated runoff into the disposal area, or containerize and ship off-site for appropriate disposal.

Work areas likely to be contaminated, e.g. loading docks, waste transfer areas, storage tank areas, should be paved and curbed to collect contaminated spillage. These curbed areas should be able to be drained by gravity. Drainage valves should remain closed until the areas are drained either to the holding ponds (when spillage has not occurred), or to treatment and disposal areas (when there is evidence of leaks or spillage).

TABLE 8-1

SUGGESTED GUIDE FOR AN OPERATION AND MAINTENANCE MANUAL

FOR WASTE TREATMENT FACILITIES (5)

I. INTRODUCTION

A. Operation and Managerial Responsibility
B. Description of Plant Type and Flow Pattern
C. Percent Efficiency Expected and How Plant Should Operate
D. Principal Design Criteria

II. PROCESS DESCRIPTION

(Function, relation to other plant units, schematic diagrams)

A. Pumping
B. Screening and Comminution
C. Grit Removal
D. Sedimentation (Primary)
E. Aeration and Reaeration
F. Sedimentation (Secondary)
G. Trickling Filters
H. Sand Filters
I. Sludge Digestion
J. Sludge Conditioning
K. Sludge Disposal
L. Gas Control and Use
M. Disinfection
N. By-Pass Controls and Excess Flow Treatment Facilities
O. Waste Stabilization Lagoons
P. Other

III. DETAILED OPERATION AND CONTROLS

(Routine, alternate, emergency, description of various controls, recommended settings, reference to schematic diagrams, failsafe features)

A. Manual
B. Automatic
C. Physical
D. Chemical

(continued)

TABLE 8-1 (continued)

E. Biological (including Bacteriological)
F. Industrial Wastes Monitoring
G. Safety Features
H. Problems, Causes, and Cures

IV. LABORATORY CONTROLS

(What and why tests are made, interpretation of results, and how samples are obtained)

A. For Each Process Description Given Above

1. Sampling
2. Flow Controls
3. Analysis

B. Monitoring of Effluent and Receiving Waters
C. Water Quality Standards

V. RECORDS

(Importance of records, graphing test results, example and sample forms)

A. Process Operations
B. Laboratory
C. Reports to be Submitted to State Agencies
D. Maintenance
E. Operating Costs

VI. MAINTENANCE

(Schedule--daily, weekly, monthly, etc., reference to pages in manufacturers' manuals)

A. Manufacturers' Recommendations
B. Preventive Maintenance Summary Schedule
C. Special Tools and Equipment
D. Housekeeping Schedule

VII. SAFETY

A. Sewers
B. Electrical Equipment
C. Mechanical Equipment

(continued)

TABLE 8-1 (continued)

D. Explosion and Fire Hazards
E. Health Hazards
F. Chlorine Handling
G. Aeration Tank Hazards
H. Recommended Safety Equipment

VIII. UTILITIES

(Source, reliability, cost)

A. Electrical
B. Gas
C. Water
D. Heat

IX. PERSONNEL

(Detail of job requirements, task plan estimating man-hours per month and year)

A. Manpower Requirements
B. Qualifications and Background
C. Certifications
D. Administration and Supervision
E. Laboratory

X. APPENDIX

A. Schematics
B. Valve Indices
C. Sample Forms
D. Chemicals Used in Plant
E. Chemicals Used in Laboratory
F. Water Quality Standards
G. Detailed Design Criteria
H. Equipment Suppliers
I. Suppliers' Manuals
(may be bound separately)

## 8.7 REFERENCES


1. Morton, W. I. Safety Techniques for Workers Handling Hazardous Materials. Chemical Engineering, 83(22):127-132, 1976.

2. Weiby, P., and K. R. Dickinson. Monitoring Work Areas for Explosive and Toxic Hazards. Chemical Engineering, 83(22): 139-145, 1976

3. Herrick, L. K. Jr. Instrumentation for Monitoring Toxic and Flammable Work Areas. Chemical Engineering, 83(22): 147-152, 1976.

4. National Fire Protection Association. Fire Protection Guide on Hazardous Materials, Sixth Edition. Boston, MA, 1975.

5. Federal Water Quality Administration. Federal Guidelines - Design Operation and Maintenance of Waste Water Treatment Facilities. U.S. Department of the Interior, Washington, DC, September 1970.

# A P P E N D I C E S

## APPENDIX A

## SUMMARY OF REPORTED WATER CONTAMINATION PROBLEMS (at Hazardous Waste Disposal Sites)

Appendix Table A-1 contains data on identified hazardous waste problems and to the extent possible data on waste composition. A reference list which indicates data sources and pertains only to this table follows the main body of the table.

Problem sites are identified by a code number in Table A-1. The code numbers and associated problem sites are listed below.

| Site Number | Site Description |
|---|---|
| 001 | Helevia Landfill adjacent to West Omerod water supply (near Allentown, PA) |
| 002 | Haverford, PA |
| 003 | Centre County, PA (near State College, PA) |
| 004 | Stringfellow Landfill, Riverside, CA |
| 005 | Rocky Mountain Arsenal, Commerce City, CO |
| 006 | Geological Reclamation Operations and Waste Systems, Inc. (GROWS) landfill, Falls Township, PA |
| 007 | Wade Site, Chester, PA |
| 008 | Bridgeport Quarry, Montgomery County, PA |
| 009 | Redstone Arsenal, Huntsville, AL |
| 010 | Love Canal, Niagara Falls, NY |
| 011 | LaBounty Dump Site, Charles City, IA |
| 012 | Saco Landfill, Saco, ME |
| 013 | Whitehouse, FL |
| 014 | near Myerstown, PA |
| 015 | Undisclosed |
| 016 | Necco Park, Niagara Falls, NY |
| 017 | FMC, Middleport, NY |
| 018 | Frontier Chemical Waste Process Inc., Pendleton, NY |
| 019 | 102nd Street, Niagara Falls, NY |
| 020 | Pfohl Brothers, Buffalo, NY |
| 021 | Reilly Tar & Chemical Co., St. Louis Park, MN |
| 022 | Windham Landfill, Windham, CT |
| 023 | LiPari Landfill, Gloucester County, NJ |
| 024 | Kin-Buc Landfill, Middlesex County, NJ |
| 025 | South Brunswick, NJ |
| 026 | Ott/Story site, Muskegon County, MI |
| 027 | Hooker Chemical Co., Montague, MI |

| Site Number | Site Description |
|---|---|
| 028 | Mayer Landfill, Springfield Township, PA |
| 029 | Chemcentral-Detroit, Detroit, MI |
| 030 | Bofors-Lakeway, Muskegon, MI |

TABLE A-1

SUMMARY OF REPORTED WATER CONTAMINATION PROBLEMS

| CONTAMINANT CLASSIFICATION | SITE CODE | PROBLEM DESCRIPTION AND WATER QUALITY | REFERENCE |
|---|---|---|---|
| Halocarbons | 001 | Between 1968 and 1969 landfill accepted various liquid industrial wastes at rate of 3,000 gal/wk; about 25 to 30% trichloroethylene (TCE)*. Materials percolated from excavated basin which now is under 50 to 60 ft of fill. Other wastes included ethyl acetate and phenols.<br>TCE* in ground water within plume - 191 to 260 mg/l<br>TCE* in ground water, ¼ mi downgradient of site - 15 to 20 mg/l | 1 |
| Phenols | 002 | Pentachlorophenol (PCP)* laden oil was deep well injected and later appeared in ground water and streams. EPA carbon trailer used to treat limited amount of contaminated ground water.<br>PCP* in ground water a few hundred feet down gradient of injection point - 2.4 mg/l | 2,3 |
| Pesticides | 003 | Industrial waste containing Kepone and Mirex both spray irrigated and "Chemfixed" and placed in impoundments. Fixing held metals but permitted release of pesticides.<br>Kepone in stream - 2 mg/l | 4 |
| Metals<br>Pesticides<br>Mirex | 004 | Site included impoundments for liquid industrial wastes and storage of solid industrial wastes. Acids, plating wastes, and DDT were major materials disposed of although wide | 5<br>(continued) |

TABLE A-1 (continued)

| CONTAMINANT CLASSIFICATION | SITE CODE | PROBLEM DESCRIPTION AND WATER QUALITY | REFERENCE |
|---|---|---|---|
| Metals<br>Pesticides<br>Misc. (continued) | | variety of materials went to site. Leachate known to exist. Soil and down stream surface water affected; area of groundwater contamination plume unknown.<br>Surface water quality downstream of site (range):<br>Cd* - 4.8 - 8.2 mg/l<br>Cr* - 52 - 205 mg/l<br>Cu* - 7 - 16 mg/l<br>Mn - 340 - 550 mg/l<br>Ni* - 28 - 48 mg/l<br>Zn* - 77 - 115 mg/l<br>pH - ∿3 | |
| Aliphatics<br>Halocarbons<br>Pesticides<br>Polynuclear Aromatics<br>Metals | 005 | Groundwater contamination resulting from the impoundment of demilitized warfare agents and wastes from chemical production facility. Efforts underway to treat contaminated groundwater.<br>Quality of contaminated groundwater (range):<br>aldrin* - <2 μg/l<br>dieldrin* - <2 - 4.5 μg/l<br>dicyclopentadiene - 80 - 1,200 μg/l<br>diisopropylmethylphosphonate - 400 - 3,600 μg/l<br>p-chlorophenylmethyl-sulfide - <10 - 68 μg/l<br>p-chlorophenylmethyl-sulfoxide - <10 - 53 μg/l<br>p-chlorophenylmethyl-sulfone - <10 - 40 μg/l<br>endrin* - <2 - 9 μg/l<br>Nemagon - <1 - 8 μg/l<br>The following are averages (all as mg/l):<br>Al - 0.124 Ba - 0.1 Be* - 0.007<br>As* - 0.011 Bo - 0.624 Ca - 164 | 6<br>(continued) |

TABLE A-1 (continued)

| CONTAMINANT CLASSIFICATION | SITE CODE | PROBLEM DESCRIPTION AND WATER QUALITY | REFERENCE |
|---|---|---|---|
| Aliphatics<br>Halocarbons<br>Pesticides<br>Polynuclear Aromatics<br>Metals (continued) | | Co - 0.1<br>Cr* - 0.012<br>Cu* - 0.001<br>Fe - 0.090<br>Pb* - 0.001<br>Mg - 49.4<br>Mn - 1.04<br>Mo - 0.114<br>Ni* - 0.032<br>K - 6.83<br>Se* - 0.003<br>Na - 378<br>Zn* - 0.024<br>Hg* - 0.0002<br>TKN - 2.22<br>$NO_2$-N - <0.010<br>$NO_3$-N - <0.012<br>$NH_3$-N - <0.010<br>Total P - 1.39<br>$PO_4$-P - <0.010<br>TOC - 10.9<br>Total inorganic carbon - 71<br>$SO_4$ - 505<br>Cl - 420<br>pH - 7.6<br>COD - 24.6<br>SS - 10.4<br>TDS - 1830 | |
| Metals<br>Misc. | 006 | Landfill accepts municipal and industrial residues; leachate with following average quality is produced (mg/l):<br>BOD - 10,900<br>COD - 18,600<br>SS - 1,040<br>TDS - 13,000<br>pH - 6.85<br>Alkalinity, as $CaCO_3$ - 5,400<br>Hardness, as $CaCO_3$ - 4,650<br>Ca - 818<br>Mg - 453<br>$PO_4$ - 2.74<br>$NH_3$-N - 1000<br>TKN - 984<br>$SO_4$ - 462<br>Cl - 4,240<br>Na - 1,350<br>K - 961<br>Cd* - 0.086<br>Cr* - 0.28<br>Fe - 312<br>Ni* - 1.55<br>Pb* - 0.67<br>Zn* - 21<br>Hg* - 0.007 | 7 |
| | | | (continued) |

TABLE A-1 (continued)

| CONTAMINANT CLASSIFICATION | SITE CODE | PROBLEM DESCRIPTION AND WATER QUALITY | REFERENCE |
|---|---|---|---|
| Aromatics<br>Phenols<br>Phthalates<br>Polynuclear Aromatics<br>Amines<br>Misc. | 007 | Hazardous wastes stored in drums and tanks on site. Following contaminants were found in soil and puddles of liquid at site:<br>1,4-dichlorobenzene*<br>1,2-dichlorobenzene*<br>1,2,4-trichlorobenzene*<br>tetrachlorobenzene isomer<br>dibutylphthalate*<br>methylnaphthalene isomer<br>methyoxyphenol isomer<br>isophorone*<br>naphthalene*<br>diphenylamine*<br>dimethylnaphthalene isomer<br>1-chloro-3-nitrobenzene<br>fluoranthene*<br>phenanthrene*<br>3-ethyltoluene<br>1,3,5-trimethylbenzene<br>1,2,4-trimethylbenzene<br>1,2,3-trimethylbenzene | 8 |
| Halocarbons | 008 | Following contaminants were detected in groundwater possibly due to migration from upgradient impoundment disposal site:<br>1,1,1-trichloroethane* - 1.6 - 2.8 μg/l<br>trichloroethene - 6.9 - 16 μg/l<br>dichloropropene* - detected, not quantified | 9 |
| | | | (continued) |

TABLE A-1 (continued)

| CONTAMINANT CLASSIFICATION | SITE CODE | PROBLEM DESCRIPTION AND WATER QUALITY | REFERENCE |
|---|---|---|---|
| Pesticides | 009 | Isomers of DDT present in surface waters downstream of pesticide production facility. Efforts underway to treat surface waters.<br><br>DDT* - ranged from 4.28 to 14.26 μg/l with average of 11.36 μg/l (over 3 months in 1979) | 10 |
| Aromatics<br>Halocarbons<br>Metals<br>Misc.<br>Phenols | 010 | Following contaminants were detected leaching from an inactive disposal site used by a chemical producer (concentrations in mg/l, except as noted):<br><br>pH - 5.6 - 6.9<br>TOC - 1800 - 4300<br>SOC - 4200<br>COD - 5900 - 11,500<br>Oil & Grease - 90<br>SS - 200 - 430<br>TDS - 15,700<br>$SO_4^{=}$ - 240<br>$S^{=}$ - <0.1<br>Total P as P<0.1 - 3.2<br>$PO_4$ as P - <0.1<br>TKN - 5.4<br>$NH_4$-N - 0.65<br>$NO_3$-N - <0.1<br>$NO_2$-N - <0.1<br><br>Na - 1000<br>Ca - 2500<br>Cl - 9500<br>Fe - 31 - 330<br>Hg* - <0.0005 - <0.001<br>Pb* - 0.3 - 0.4<br>Sb* - 2 μg/l**<br>As* - 130 μg/l**<br>Cd* - 11 μg/l**<br>Cr* - 270 μg/l**<br>Cu* - 540 μg/l**<br>Ni* - 240 μg/l**<br>Se* - 9 μg/l**<br>Ag* - 1 μg/l**<br>Zn* - 480 μg/l**<br>Cn* - <0.01<br><br>hexachlorobutadiene* - 109 μg/l**<br>1,2,4-trichlorobenzene* - 23 μg/l**<br>aldrin* - 23 μg/l**<br>heptachlor* - <10 μg/l** | 12<br>22<br>27<br>28 |

(continued)

TABLE A-1 (continued)

| CONTAMINANT CLASSIFICATION | SITE CODE | PROBLEM DESCRIPTION AND WATER QUALITY | REFERENCE |
|---|---|---|---|
| Aromatics<br>Halocarbons<br>Metals<br>Misc.<br>Phenols (continued) | | phenol* - 30 µg/l**<br>phenols (total)* - 4.5**<br>2,4-dichlorophenols* - 10 µg/l**<br>methyl chloride* - 180 µg/l**<br>1,1-dichloroethylene - 28 µg/l<br>chloroform* - ND - 4550 µg/l<br>trichloroethylene* - ND - 760 µg/l<br>dibromochloromethane* - ND - 35 µg/l<br>1,1,2,2-tetrachloroethylene - ND - 1000 µg/l<br>chlorobenzene* - 1200 µg/l**<br>methanol - 42.4**<br>ethanol - 56.4**<br>acetone - 50.3**<br>isopropyl alcohol - <0.1**<br>benzene* - ND - 3300 µg/l<br>toluene* - ND - 31,000 µg/l<br>1,1,1-trichloroethane* - ND - 225 µg/l<br>carbon tetrachloride* - 92 µg/l**<br>hexachlorocyclohexane<br>alpha isomer - ND - 600 µg/l<br>beta isomer - ND - 700 µg/l<br>gamma isomer - ND - 600 µg/l<br>delta isomer - ND - 120 µg/l<br><br>** denotes concentration following flow equalization and sand filtration processes and prior to granular carbon adsorption | |
| | | | (continued) |

TABLE A-1 (continued)

| CONTAMINANT CLASSIFICATION | SITE CODE | PROBLEM DESCRIPTION AND WATER QUALITY | REFERENCE |
|---|---|---|---|
| Metals<br>Aromatics<br>Halocarbons<br>Misc.<br>Phenols<br>Polynuclear Aromatics | 011 | Groundwater reported to be contaminated by migration of pollutants from municipal landfill utilized by pharmaceutical manufacturer for disposal of production residues. Following data represents groundwater quality at well located between landfill and river which is downgradient. Other wells in area and downstream also report contamination (concentrations in µg/l, except as noted): | 13<br>14 |

BOD - 2000 mg/l
COD - 7100 mg/l
TOC - 2300 mg/l
TSS - <3 mg/l
Total Phenols - 18 mg/l
NH-N - 130 mg/l

As* - 590 mg/l
Ba - 0.60 mg/l
Cu* - 0.02 mg/l
Hg* - 0.0048 mg/l
Zn* - 0.17 mg/l

Volatile Organics:

| | range | average |
|---|---|---|
| benzene* | 150 - 230 | 190 |
| chlorobenzene* | 4.6 - 7.0 | 5.5 |
| 1,2-dichloroethene* | 270 - 330 | 310 |
| trans-1,2-dichloroethene* | 25 - 31 | 28 |
| dichloromethane* | 29 - 130 | 82 |
| ethyl benzene* | 3.0 - 5.2 | 3.9 |
| toluene* | 24 - 34 | 28 |
| 1,1,1-trichloroethane* | 4.2 - 5.6 | 5.0 |
| 1,1.2-trichloroethane* | 390 - 870 | 600 |
| trichloromethane* | 90 - 320 | 250 |
| trichloroethane* | 39 - 48 | 43 |
| tetrachloroethylene* | - | 23 |

Neutral Extractible Organics:

| | | |
|---|---|---|
| aniline | 140 - 870 | 410 |

(continued)

TABLE A-1 (continued)

| CONTAMINANT CLASSIFICATION | SITE CODE | PROBLEM DESCRIPTION AND WATER QUALITY | | | REFERENCE |
|---|---|---|---|---|---|
| Metals<br>Aromatics<br>Halocarbons<br>Misc.<br>Phenols<br>Polynuclear Aromatics (continued) | | Neutral Extractible Organics (continued): | range | average | |
| | | o-chloroaniline | ND - 360 | 140 | |
| | | p-chloronitrobenzene | 460 - 940 | 720 | |
| | | chloronitrotoluene | ND - 460 | 120 | |
| | | 4-chloro-3-nitrobenzamide | 440 - 8700 | 4200 | |
| | | 2,6-dichlorobenzamine | 890 - 30,000 | 8800 | |
| | | 2-ethylhexanal | ND - 4500 | 2600 | |
| | | 2-ethylhexanol | 19,000 - 23,000 | 22,000 | |
| | | 3-heptanone | ND - 1300 | 640 | |
| | | phenol* | 12,000 - 17,000 | 14,000 | |
| | | o-nitroaniline | 170,000 - 180,000 | 180,000 | |
| | | p-nitroaniline | 32,000 - 47,000 | 37,000 | |
| | | nitrobenzene* | ND - 740 | 250 | |
| | | o-nitrophenol* | 8,600 - 12,000 | 11,000 | |
| | | 2-chlorophenol* | - | 3 | |
| | | 2,4-dinitrophenol* | - | 99 | |
| | | n-nitrosodiphenylamine* as diphenylamine | - | 190 | |
| | | 1,1-dichloroethylene* | - | P | |
| Metals<br>Misc. | 012 | Following contaminants detected in groundwater at well near tannery sludge disposal area:<br>Cr* - 1 mg/l average; 5 mg/l maximum<br>Zn* - 2.77 mg/l average; 4.9 mg/l maximum<br>pH - 6.35 average; 6.0 minimum | | | 15 |

(continued)

TABLE A-1 (continued)

| CONTAMINANT CLASSIFICATION | SITE CODE | PROBLEM DESCRIPTION AND WATER QUALITY | REFERENCE |
|---|---|---|---|
| PCB's | 013 | Impoundments containing PCB contaminated oil and water were dewatered to eliminate threat of stream and groundwater pollution. Influent to powdered activated carbon treatment facility contained:<br>Aroclor 1242*<br>Aroclor 1254* ranged from 0.56 to 7.7 μg/l<br>Aroclor 1260* | 16 |
| Metal | 014 | Groundwater contamination resulted from land disposal of arsenic compounds by pharmaceutical manufacturer. Prior to installation of groundwater purging and treatment system, arsenic* concentrations were 10,000 mg/l; after several years of purging concentrations of 10-30 mg/l remain. | 17 |
| Metal | 015 | Waste aresenic was disposed of in dump. Arsenic* concentrations found in groundwater were 175 mg/l. | 17 |
| Metals | 016 | Following contaminants found in groundwater near inactive chemical waste disposal site:<br>Ba - 2000 mg/l<br>Other inorganics and organics anticipated to be present. | 18 |
| Metals<br>Pesticides | 017 | Arsenic* and Carbofuran found in surface runoff and in lagoon used by chemical manufacturer. | 18 |

(continued)

TABLE A-1 (continued)

| CONTAMINANT CLASSIFICATION | SITE CODE | PROBLEM DESCRIPTION AND WATER QUALITY | REFERENCE |
|---|---|---|---|
| Metals<br>Misc. | 018 | Following contaminants found in impoundment used by chemical waste processor (conc. in mg/l):<br>Cd* - 1<br>Cu* - 9<br>Fe - 60<br>Ni* - 3<br>Zn* - 1<br>pH - 3<br>$NH_3$-N - 30 | 18 |
| Metals<br>Aromatics | 019 | Mercury* and benzene hexachloride believed to be in groundwater in vicinity of chemical manufacturing and waste disposal operations. | 18 |
| Aromatics | 020 | Chlorinated benzenes found in leachate and groundwater in vicinity of waste disposal operation used by several chemical producers. | 18 |
| Phenol<br>Polynuclear Aromatics | 021 | Following contaminants found in shallow groundwater in vicinity of chemical production facility:<br>phenol* - 50 µg/l<br>polynuclear aromatics - 3400 µg/l | 19 |
| Metals<br>Misc. | 022 | Following range of contaminants were found in ground and surface waters (ponds) in vicinity of municipal landfill which also accepted industrial wastes (conc. in mg/l):<br>Pollutant — 3 worst case wells — 2 worst case surface waters<br>Alkalinity — 20.6 - 300 — 81 - 156<br>pH — 6.27 - 6.5 — 6.22 - 6.3 | 20 |

(continued)

TABLE A-1 (continued)

| CONTAMINANT CLASSIFICATION | SITE CODE | PROBLEM DESCRIPTION AND WATER QUALITY | REFERENCE |
|---|---|---|---|
| Metals<br>Misc. (continued) | | Pollutant — 3 worst case wells — 2 worst case surface waters<br>TS — 840 - 1730 — 159 - 258<br>TOC — 12 - 39 — 20.4 - 33.5<br>TKN — <1 - 8.7 — 6.05<br>Cl — 31.0 - 125 — 3.65 - 7.48<br>Na - mixed/settled[a] — 4.6 - 34.1/26.9 — 21.5 / NR<br>Mn - mixed/settled[a] — 0.41 - 4.16/3.70 — 1.03 / NR<br>Fe - mixed/settled[a] — 21.1 - 196/162 — 3.38 / NR<br>Zn*- mixed/settled[a] — 0.32 - 0.54/0.21 — 0.07 / NR<br>Cu*-mixed/settled[a] — 0.082 - 0.365/0.076 — 0.006 / NR<br>Pb*-mixed/settled[a] — 0.196 - 0.393/0.271 — 0.003 / NR<br>Cr*-mixed/settled[a] — 0.123 - 0.55/0.28 — <0.001 / NR<br>Specific conductance — 80 - 1200 — NR<br>a - results reported for mixed sample and supernatant from settled sample<br>NR - not reported | |
| Metals<br>Phenols<br>Misc. | 023 | Following contaminants were detected in groundwater down-gradient of landfill which accepted large quantities of pharmaceutical wastes. Data represents quality range at 3 poorest quality wells over 2 yr time span. (conc. as mg/l):<br>pH — 6.0 - 7.9 — Cl — 40 - 1500<br>specific conductance — 180 - 2000 — F — 0.14 - 1.3<br>temperature ($^{o}F$) — 58 - 63 — TDS — 1455<br>color — 50 - 4000 — $NO_3$-N — 0.01 - 0.04<br>sulfate — 1.2 - 25 — $PO_4$-P — 0.04<br>total hardness — 700 - 1700 — Fe — 0.21 - 678<br>Ca — 180 - 280 — K — 4.9 - 30<br>Mg — 25 - 250 — Mn — 0.01 - 1.0 | 21<br>(continued) |

TABLE A-1 (continued)

| CONTAMINANT CLASSIFICATION | SITE CODE | PROBLEM DESCRIPTION AND WATER QUALITY | | | | REFERENCE |
|---|---|---|---|---|---|---|
| Metals<br>Phenols<br>Misc. (continued) | | Na | 13 - 130 | CN* | 0.005 | |
| | | Se * | 0.01 - 0.02 | Pb* | 0.10 | |
| | | COD | 168 - 9920 | Cu* | 0.10 - 0.71 | |
| | | $BOD_5$ | 42 - 4040 | Hg* | 0.0005 | |
| | | MBAS | 0.24 | Zn* | 0.36 - 26.8 | |
| | | Phenols* | 0.008 - 54.17 | Ag* | 0.01 | |
| Aromatics<br>Halocarbons<br>PCB's<br>Polynuclear Aromatics<br>Phthalates | 024 | Following range of contaminants were detected in leachate from landfill accepting major proportions of chemical production wastes (conc. in µg/l, except as noted): | | | | 23 |
| | | Aroclor 1254* | 70 | | | |
| | | Aroclor 1016*/1242* | 110 to 1900 | | | |
| | | Aroclor 1016*/1242*/1254* | 66 to 1.8 g/l | | | |
| | | benzene* | P to 1930 | | | |
| | | biphenyl napthalene | P | | | |
| | | chlorobenzenes* | P to 4620 | | | |
| | | camphene | P | | | |
| | | $C_4$ alkyl cyclopentadiene | P | | | |
| | | $C_5$ substituted cyclopentadiene | P | | | |
| | | dichlorobenzene* | P to 517 | | | |
| | | dichloroethane* | 180 | | | |
| | | dichloroethylene | P | | | |
| | | limonene | P | | | |
| | | methyl chloride* | 3.1 | | | |
| | | methyl napthalene | P | | | |
| | | parafins | P | | | |
| | | petroleum oil | P | | | |
| | | phthalates | P | | | |
| | | phthalate esters | P | | | |
| | | pinene | P | | | (continued) |

TABLE A-1 (continued)

| CONTAMINANT CLASSIFICATION | SITE CODE | PROBLEM DESCRIPTION AND WATER QUALITY | REFERENCE |
|---|---|---|---|
| Aromatics<br>Halocarbons<br>PCB's<br>Polynuclear Aromatics<br>Phthalates<br>(continued) | | styrene: P<br>tetrachloroethylene*: P to 590<br>toluene*: P to 16,200<br>trichloroethane*: P to 490<br>trichloroethylene*: P to 7700<br>trimethylbenzenes: P<br>MIBK: 2000<br>xylene: P to 3300 | |
| Halocarbons<br>Misc. | 025 | Following contaminants were detected in groundwater in vicinity of municipal landfill due to "industrial waste seepage from landfill" (conc. in μg/l):<br>1,1,1-trichloroethane*: 532<br>tetrachloroethylene*: 187<br>1,1-dichloroethane*: 2.3<br>1,2-dichloroethylene*: 0.2<br>chloroform*: 1.1<br>1,2-dichloroethane*: 2.1<br>dibromochloromethane*: 3.9<br>bromoform*: 0.2<br>TOC: 500 | 24 |
| Halocarbons<br>Aromatics<br>Phenols<br>Polynuclear Aromatics | 026 | Ground and surface waters were polluted by migration of contaminants from waste disposal lagoons and direct discharge practices attributed to chemical production facility. Following data describe groundwater quality range at four wells located within the groundwater contamination plums (conc. in μg/l): | 25 |

(continued)

TABLE A-1 (continued)

| CONTAMINANT CLASSIFICATION | SITE CODE | PROBLEM DESCRIPTION AND WATER QUALITY | | REFERENCE |
|---|---|---|---|---|
| Halocarbons<br>Aromatics<br>Phenols<br>Polynuclear Aromatics (continued) | | Volatile Organics: | | |
| | | vinyl chloride* | 140 to 32,500 | |
| | | methylene chloride | <5 to 6570 | |
| | | 1,1-dichloroethylene* | 220 to 19,850 | |
| | | 1,1-dichlorethane* | <5 to 14,280 | |
| | | 1,2-dichlorethane* | 350 to 8150 | |
| | | benzene* | 6 to 7370 | |
| | | 1,1,2-trichloroethane* | <5 to 790 | |
| | | 1,1,2,2-tetrachloroethane* | <5 to 1590 | |
| | | toluene* | <5 to 5850 | |
| | | ethylbenzene* | <5 to 470 | |
| | | chlorobenzene* | <5 to 78 | |
| | | trichlorofluoromethane* | <5 to 18 | |
| | | Acid Extractable Organics: | | |
| | | o-chlorophenol* | <3 to 20 | |
| | | phenol* | <3 to 33 | |
| | | o-sec-butylphenol[b] | <3 to 83 | |
| | | p-isobutylanisol[b] or p-acetonylanisol[b] | <3 to 86 | |
| | | p-sec-butylphenol[b] | <3 to 48 | |
| | | p-2-oxo-n-butylphenol | <3 to 1357 | |
| | | m-acetonylanisol[b] | <3 to 1546 | |
| | | isoprophylphenol[b] | <3 to 8 | |
| | | 1-ethylpropylphenol | <3 | |
| | | dimethylphenol* | <3 | |
| | | benzoic acid | <3 to 12,311 | |
| | | Base Extractible Organics: | | |
| | | dichlorobenzene* | <10 to 172 | |
| | | dimethylaniline | <10 to 6940 | (continued) |

TABLE A-1 (continued)

| CONTAMINANT CLASSIFICATION | SITE CODE | PROBLEM DESCRIPTION AND WATER QUALITY | REFERENCE |
|---|---|---|---|
| Halocarbons<br>Aromatics<br>Phenols<br>Polynuclear Aromatics (continued) | | Base Extractible Organics (continued):<br>m-ethylaniline <10 to 7640<br>1,2,4-trichlorobenzene* <10 to 28<br>napthalene* <10 to 66<br>methylnapthalene <10 to 290<br>camphor <10 to 7571<br>chloroaniline <10 to 86<br>benzylamine or o-toluidine <10 to 471<br>phenanthrene* or anthracene* <10 to 670<br>b - structure not validated by actual compound | |
| Halocarbons<br>Aromatics<br>Misc. | 027 | Groundwater pollution caused by the production, disposal, and storage of chemicals and waste residues in vicinity of chemical production facility (conc. in µg/l, except as noted):<br>chloride 5.5 to 8000 mg/l<br>tetrachloromethane* <1 to 25,000<br>trichloromethane* <1 to <10,000<br>trichloroethene <3 to 10,000<br>tetrachloroethene <1 to >50,000<br>hexachlorobutadiene* ($C_{46}$) <20<br>hexachlorocyclopentadiene* ($C_{56}$) <100<br>octachlorocyclopentene ($C_{58}$) <100<br>hexachlorobenzene* ($C_{66}$) <100 | 26 |
| | | | (continued) |

TABLE A-1 (continued)

| CONTAMINANT CLASSIFICATION | SITE CODE | PROBLEM DESCRIPTION AND WATER QUALITY | REFERENCE |
|---|---|---|---|
| Alcohols<br>Aliphatics<br>Aromatics<br>Ethers<br>Halocarbons | 028 | Following range of contamiants were found in groundwater at a landfill (conc. in mg/l):<br><br>methylene chloride* 184<br>1,1,1-trichloroethane* 35<br>trichloroethene 84<br>toluene* 43<br>tetrachloroethene 0.850<br>benzaldehyde 3,100<br>benzene methanol 4,600<br>trichlorotoluene 3,300<br><br>Also believed to contain MIBK, hexane, dimethyl ether, and dimethylpentene, approximately 10-100 mg/l of each. | 11 |
| Alcohols<br>Aliphatics<br>Aromatics<br>Halocarbons<br>Phthalates<br>Polynuclear aromatics | 029 | Groundwater quality in vicinity of facility which receives solvents and chemicals in bulk and repackages for distribution (conc. in mg/l):<br><br>1-methyl-3-(1-methylethanyl) cyclohexene < 1.453<br>o-xylene < 1.453<br>p-xylene 48.170<br>m-xylene 19.708<br>methylethylbenzene < 1.453<br>1,4-dimethyl-2-(1-methylethyl) benzene 11.913<br>1,2-diethylbenzene 7.971<br>1-ethyl-2,4-dimethylbenzene < 1.453<br>2-ethyl-1,4-dimethylbenzene < 1.453<br>2-ethyl-1,3-dimethylbenzene < 1.453<br>1-ethyl-3,5-dimethylbenzene 12.507<br>1,2,3,5-tetramethylbenzene 36.479<br>1,2,4,5-tetramethylbenzene < 1.453 | 29<br><br>(continued) |

TABLE A-1 (continued)

| CONTAMINANT CLASSIFICATION | SITE CODE | PROBLEM DESCRIPTION AND WATER QUALITY | | REFERENCE |
|---|---|---|---|---|
| Alcohols | | (2-methyl-1-propenyl) benzene | < 1.453 | |
| Aliphatics | | 4-ethyl-1,2-dimethylbenzene | < 1.453 | |
| Aromatics | | 1-methyl-3-(1-methylethyl) benzene | < 1.453 | |
| Halocarbons | | 1-methyl-4-(1-methylethyl) benzene | < 1.453 | |
| Phthalates | | naphthalene* | 18.698 | |
| Polynuclear aromatics (continued) | | 1-ethyl-2,4,5-trimethylbenzene | < 1.453 | |
| | | 5-ethyl-1,2,4-trimethylbenzene | < 1.453 | |
| | | 1-ethyl-2-isopropylbenzene | < 1.453 | |
| | | 1-methylnaphthalene | < 1.453 | |
| | | 2-methylnaphthalene | 8.067 | |
| | | 1,2-dimethylnaphthalene | < 1.453 | |
| | | ethylbenzene | 10.115 | |
| | | 1,2,4-trimethylbenzene | 11.239 | |
| | | 1,3,5-trimethylbenzene | 37.113 | |
| | | 1,2,3-trimethylbenzene | 13.702 | |
| | | 2-butoxyethanol | < 2.168 | |
| | | 1-(2-methoxy-1-methylethoxy)-2-propanol | < 2.168 | |
| | | 2-ethyl-4-methyl-1-pentanol | < 2.168 | |
| | | 2-methylcyclopentanol | < 2.168 | |
| | | 4-methyl-2-pentanol | < 2.168 | |
| | | tetrachloroethene | 89.155 | |
| | | dipropyl phthalate | < 3.883 | |
| | | dibutyl phthalate* | 21.732 | |
| | | bis(2-ethylhexyl) phthalate* | 52.995 | |
| | | hydrocarbons (4-total) | 42.760 | |
| | Volatiles | | | |
| | | methylene chloride* | 21 | |
| | | acetone | 62 | |
| | | 2-butanol | 550 | |
| | | dichloroethylene* | 10 | |
| | | methyl ethyl ketone | 53 | (continued) |

TABLE A-1 (continued)

| CONTAMINANT CLASSIFICATION | SITE CODE | PROBLEM DESCRIPTION AND WATER QUALITY | | | REFERENCE |
|---|---|---|---|---|---|
| Alcohols<br>Aliphatics<br>Aromatics<br>Halocarbons<br>Phthalates<br>Polynuclear aromatics (continued) | | 1-1-1-trichloroethane* | | 590 | |
| | | 1-ethoxypropane | | 87 | |
| | | 2-methyl-2-butanol | | 58 | |
| | | 1-methoxy-2-propanol | | 66 | |
| | | 2-ethoxy-ethanol | | 3.3 | |
| | | 4-methyl-2-pentanone | | 110 | |
| | | 2-methylcyclopentanol | | 1.7 | |
| | | 4-methyl-2-pentanol | | 140 | |
| | | tetrachloroethylene* | | 8.2 | |
| | | toluene* | | 100 | |
| | | | Lower portion of Aquifer | Upper portion of Aquifer | |
| | | TOC | 24 - 8700 | 73 - 2200 | |
| | | COD | 39 - 41,400 | 960 - 16,300 | |
| Aliphatics<br>Aromatics<br>Halocarbons<br>Phenols<br>Polynuclear aromatics | 030 | Groundwater contamination due to leaching from unlined and inadequately lined disposal lagoons and soil contamination by process wastewater conveyance system (conc. in μg/l): | | | 30 |
| | | Nonvolatiles | | | |
| | | aniline | | <6.2 to 1900 | |
| | | 2-chloroaniline | | <9.9 to 12,000 | |
| | | 1-methyl-4-phenoxybenzene | | <8.4 to 670 | |
| | | 3,3-dichloro-(1-1'-diphenyl)-4,4'-diamine | | <8.4 to 1600 | |
| | | 1-chloro-3-nitrobenzene | | <8.0 to 340 | |
| | | 2 methylphenol | | <8.0 to 210 | |
| | | bis(pentafluorophenyl) phenylphosphine | | <38 | |
| | | 4,4'-dichlorobenzophenone | | <38 | |
| | | (1-butylhexyl)benzene | | <36 | (continued) |

TABLE A-1 (continued)

| CONTAMINANT CLASSIFICATION | SITE CODE | PROBLEM DESCRIPTION AND WATER QUALITY | | REFERENCE |
|---|---|---|---|---|
| Aliphatics | | (1-propylheptyl) benzene | <36 | |
| Aromatics | | (1-ethyloctyl) benzene | <36 | |
| Halocarbons | | (1-methylnomyl) benzene | <36 | |
| Phenols | | diphenyldiazene | <36 | |
| Polynuclear aromatics (continued) | | (1-butylheptyl) benzene | <36 | |
| | | (1-propyloctyl) benzene | <36 | |
| | | (1-ethylnonyl) benzene | <36 | |
| | | (1-methyldecyl) benzene | <36 | |
| | | (1-pentylheptyl) benzene | <36 | |
| | | (1-butyloctyl) benzene | <36 | |
| | | (1-propylnonyl) benzene | <36 | |
| | | (1-ethyldecyl) benzene | <36 | |
| | | (1-methylundecyl) benzene | <36 | |
| | | 1-heptyl-1,2,3,4-tetrahydro-4-methyl-naphthalene | <36 | |
| | | hydrocarbons | <36 | |
| | | 2-chloro-n-phenylbenzamide | <38 | |
| | | Volatiles | | |
| | | methylene chloride* | <0.3 to 18 | |
| | | acetone | <0.1 to 470 | |
| | | thiobismethane | <1.0 to 290 | |
| | | 1,1-dichloroethane* | <2.0 to 12,000 | |
| | | 1,1-dichloroethylene* | <110 | |
| | | chloroform* | <17 | |
| | | 1,2-dichloroethane* | 2.1 to 4500 | |
| | | carbon tetrachloride* | <70.0 | |
| | | 1,2-dichloropropane* | <22 | |
| | | trichloroethylene* | <1.3 to 55 | |
| | | 1,1,2,2-tetrachloroethene | 0.6 to 560 | |
| | | toluene* | <0.4 to 2200 | |
| | | xylene (2 isomers) | <0.4 to 5400 | (continued) |

TABLE A-1 (continued)

| CONTAMINANT CLASSIFICATION | SITE CODE | PROBLEM DESCRIPTION AND WATER QUALITY | | REFERENCE |
|---|---|---|---|---|
| Aliphatics | | cyclohexane | <0.4 to 22 | |
| Aromatics | | methylcyclopentane | <0.4 to 11 | |
| Halocarbons | | 2,3-dimethyl-2-pentene | <8.6 | |
| Phenols | | chlorobenzene* | <14 | |
| Polynuclear aromatics | | ethylbenzene* | <0.6 to 3100 | |
| (continued) | | benzene* | <1.1 to 5400 | |

* - A priority pollutant

ND - Not Detected

P - Present

## TABLE A-2. REFERENCES LISTED IN TABLE A-1


1. Personal Communication. Mr. Leon Oberdick, Pennsylvania Department of Environmental Resources, Reading, PA. June 21, 1979.
2. Personal Communication. Mr. John Osgood, Pennsylvania Department of Environmental Resources, Harrisburg, PA. June 19, 1979.
3. Personal Communication. Mr. Thomas Massey. U.S. Environmental Protection Agency, Philadelphia, PA. May 17, 1979.
4. Personal Communication. Mr. Carlyle Westlund, Pennsylvania Department of Environmental Resources, Harrisburg, PA. June 19, 1979.
5. Hatayama, H.K., Simmons, B.P., and R.D. Stephens. The Stringfellow Industrial Waste Disposal Site: A Technical Assessment of Environmental Impact. California Department of Health Services, Berkeley, CA. March 1979.
6. Buhts, R.E., Malone, P.G., and D.W. Thompson. Evaluation of Ultraviolet/Ozone Treatment of Rocky Mountain Arsenal (RMA) Groundwater (Treatability Study). Technical Report Y-78-1, U.S. Army Engineer Waterway Experiment Station, Vicksburg, MI. January 1978.
7. Steiner, R.L., Keenan, J.D., and A.A. Fungaroli. Demonstrating Leachate Treatment: Report on a Full-Scale Operating Plant. SW-758, US EPA, Office of Water and Waste Management, Washington, DC. May 1979.
8. US EPA, National Enforcement Investigations Center. Partial Listing of Compounds in ABM-Wade Disposal Site Samples. Unpublished Memorandum to US EPA Region III Enforcement Division, Philadelphia, PA. April 25, 1979.
9. Pennsylvania Department of Environmental Resources. Results of DER Samples of Bridgeport Quarry Taken on April 23, 1979. Unpublished Data. Pennsylvania Department of Environmental Resources, Norristown, PA. April 23, 1979.
10. Personal Communication. Mr. F.A. Jones, Jr. Redstone Arsenal Carbon Treatment Plant. Unpublished Data. Department of the Army, US Army Toxic and Hazardous Materials Agency, Aberdeen Proving Ground, MD. July 2, 1979.

TABLE A-2 (continued)


11. Personal Communication. Ms. Marilyn A. Hewitt. Water Quality Report, Special Analyses Concerning Mayer Landfill, Springfield Township, PA. September 28, 1980. Pennsylvania Department of Environmental Resources, Norristown, PA. December 26, 1980.

12. Barth, E.F. and J.M. Cohen. Evaluation of Treatability of Industrial Landfill Leachate. Unpublished Report. US Environmental Protection Agency, Cincinnati, OH. November 30, 1978.

13. Dahl, T.O. NPDES Compliance Monitoring and Water/Waste Characterization Salsbury Laboratories/Charles City, Iowa. EPA 330/2-78-019, US Environmental Protection Agency, National Enforcement Investigations Center, Denver, CO. November 1978.

14. US Environmental Protection Agency. Report of Investigation Salsbury Laboratories, Charles City, Iowa. US Environmental Protection Agency, Region VII Surveillance and Analyses Division, Kansas City, MO. February 1979.

15. Atwell, J.S. Identifying and Correcting Groundwater Contamination at a Land Disposal Site. In: Proceedings of the Fourth National Congress Waste Management Technology and Resource and Energy Recovery, Atlanta, GA. November 1975. pp. 278-301.

16. Stroud, F.B., Wilkerson, R.T., and A. Smith. Treatment and Stabilization of PCB Contaminated Water and Waste Oil: A Case Study. In: Proceedings of 1978 National Conference on Control of Hazardous Material Spills, Miami Beach, FL. April 1978. pp. 135-144.

17. Stover, E.L. and A.A. Metry. Hazardous Solid Waste Management Report. Pennsylvania Department of Environmental Resources, Division of Solid Waste Management, Harrisburg, PA. November 1976.

18. Interagency Task Force on Hazardous Wastes. Draft Report on Hazardous Waste Disposal in Erie and Niagara Counties, New York. SW-P11 (3/79). Interagency Task Force on Hazardous Wastes, Albany, NY. March 1979.

19. Personal Communication. Mr. Steven Lees, US Environmental Protection Agency, Cincinnati, OH. August 2, 1979.

20. Beck, W.W. Jr., Evaluation of Chemical Analyses Windham Landfill, Windham, Connecticut. Letter to Mr. Donald E. Sanning. US Environmental Protection Agency, Cincinnati,OH. January 26, 1978.

21. Personal Communication. Mr. Steven Lees. Compilation of Data Related to LiPari Landfill. US Environmental Protection Agency, Cincinnati, OH. August 2, 1979.

TABLE A-2 (continued)


22. Personal Communication. Mr. Steven Lees. Compilation of Love Canal Leachate Data. US Environmental Protection Agency, Cincinnati, OH. August 2, 1979.

23. Brezenski, F.T. Laboratory Results - Kin Buc Landfill. Unpublished Data in Memorandum to R.D. Spear, Chief Surveillance and Monitoring Branch. US Environmental Protection Agency. January 24, 1978.

24. Isacoff, E.G. and J.A. Bittner. Resin Adsorbent Takes on Chlororganics from Well Water. Water and Sewage Works, 126 (8): 41-42, 1979.

25. Sturino, E. Analytical Results: Samples from Story Chemicals, Data Set Others 336. Unpublished Data. US Environmental Protection Agency, Region V, Central Regional Laboratory, Chicago, IL. May 1978.

26. Personal Communication. Mr. Andrew W. Hogarth. Unpublished Data: Report of Sampling, Hooker Chemical Corp. Monitoring Wells, Montague, Michigan. December 1978. Michigan Department of Natural Resources, Lansing, MI. August 7, 1979.

27. O'Brien, R.P. City of Niagara Falls, New York, Love Canal Project. Unpublished Report. Calgon Corp., Calgon Environmental Systems Division, Pittsburgh, PA.

28. Recra Research Inc. Priority Pollutant Analyses Prepared for Newco Chemical Waste Systems, Inc. Unpublished Report. Recra Research Inc., Tonawanda, NY. April 16, 1979.

29. Personal Communciation. Ms. Deborah Mulcahey. Unpublished Data: Analytical Results of Data Set - EDO 489, Collected at Bofors-Lakeway, Inc., Muskegon, Michigan by U.S. Environmental Protection Agency Region V, February 12, 1980. Michigan Department of Natural Resources, Lansing, Michigan. December 18, 1980.

30. Personal Communication. Ms. Deborah Mulcahey. Compilation of Data related to Chemcentral-Detroit. Michigan Department of Natural Resources. December 18, 1980.

# APPENDIX B

## ALPHABETICAL LISTING OF RCRA POLLUTANTS

The Hazardous Waste and Consolidated Permit Regulations which appeared in the May 19, 1980 Federal Register contain three lists of hazardous wastes: (1) acute hazardous {Sec. 261.33(e)}, (2) hazardous {Appendix VII}, and (3) Toxic {Sec. 261.33(f)}. These three lists are consolidated into one alphabetical listing in this appendix to facilitate location of a compound. The RCRA category (1,2, or 3) above is indicated for each compound. Multiple entries for a compound indicate that the compound appears in more than one category.

TABLE B-1. LIST OF RCRA POLLUTANTS

| Compound | RCRA Pollutant Group |
|---|---|
| Acetalaldehyde | H, T |
| (Acetato)phenylmercury | H |
| Acetone | T |
| Acetonitrile | H, T |
| 3-(alpha-Acetonylbenzyl)-4-hydroxycoumarin and salts | H, A |
| Acetophenone | T |
| 2 Acetylaminofluorene | H, T |
| Acetyl Chloride | H, T |
| 1-Acetyl-2-thiourea | A, H |
| Acrolein | A, H |
| Acrylamide | H, T |
| Acetylene tetrachloride | T |
| Acetylenetrichloride | T |
| Acrylic acid | T |
| Acrylonitrile | H, T |
| AEROTHENE TT | T |
| Aflatotoxins | H |
| Agarin | A |
| Agrosan GN 5 | A |
| Aldicarb | A |
| Aldifen | A |
| Aldrin | A, H |
| Algimycin | A |
| Allyl alcohol | A, H |
| Aluminum phosphide | A, H |
| ALVIT | A |
| 4-Aminobiphenyl | H |
| 6-Amino-1,1a,2,8,8a,8b-hexahydro-8-(hydroxymethyl)-8a-methoxy-5-(methylcarbamate azirino (2',3':3,4) pyrrolo (1,2-a)indole-4,7-doine(ester) (Mitomycin C) | H, T |
| Aminoethylene | A |
| 5-(Aminomethyl)-3-isoxazolol | H, A |
| 4-Aminopyridine | A, H |
| Amitrole | H, T |
| Ammonium metavanadate | A |
| Ammonium picrate | A |
| Aniline | T |
| Antimony and Compounds, N.O.S.[1] | H |
| ANTIMUCIN WDR | A |
| ANTURAT | A |
| AQUATHOL | A |
| Aramite | H |
| ARETIT | A |
| Arsenic and compounds, N.O.S. | H |
| Arsenic acid | A, H |
| Arsenic pentoxide | A, H |
| Arsenic trioxide | A, H |
| Asbestos | T |
| Athrombin | A |
| Auramine | H, T |
| AVITROL | A |
| Azaserine | H, T |
| Aziridene | A |
| AZOFOS | A |
| Azophos | A |
| BANTU | A |
| Barium and compounds, N.O.S. | H |
| Barium cyanide | A, H |
| BASENITE | A |
| BCME | A |
| Benz[c]acridine | H, T |
| Benz[a]anthracene | H |
| Benzal chloride | T |
| Benzene | H, T |
| Benzenearsonic acid | H |
| Benzenesulfonyl chloride | T |
| Benzenethiol | A, H |
| Benzidine | H, T |
| 1,2-Benzisothiazolin-3-one, 1,1-dioxide | T |
| Benzo[a]anthracene | H, T |

(continued)

TABLE B-1 (continued)

| Compound | RCRA Pollutant Group | Compound | RCRA Pollutant Group |
|---|---|---|---|
| Benzo[b]fluoranthene | H | CERESAN | A |
| Benzo[j]fluoranthene | H | CERESAN UNIVERSAL | A |
| Benzo[a]pyrene | H, T | CHEMOX GENERAL | A |
| Benzoepin (Endosulfan) | A | CHEMOX P.E. | A |
| Benzotrichloride | H, T | CHEM-TOL | A |
| Benzyl chloride | H | Chloral | T |
| Beryllium and compounds N.O.S. | H | Chlorambucil | H, T |
| | | Chlordane | T |
| Beryllium dust | A | Chlordane (alpha and gamma isomers) | H |
| Bis(2-chloroethoxy) methane | H, T | Chlorinated benzenes, N.O.S. | H |
| Bis(2-chloroethyl) ether | H T | Chlorinated ethane, N.O.S. | H |
| N,N-Bis(2-chloroethyl)-2-naphthylamine | H T | Chlorinated naphthalene, N.O.S. | H |
| Bis(2-chloroisopropyl) ether | H, T | Chlorinated phenol, N.O.S. | H |
| Bis(chloromethyl) ether | A, H | Chloroacetaldehyde | A, H |
| Bis(2-ethylhexyl) phthalate | H, T | Chloroalkyl ethers | H |
| BLADAN-M | A | p-Chloroaniline | A, H |
| Bromoacetone | A, H | Chlorobenzene | H, T |
| Bromomethane | H, T | Chlorobenzilate | H, T |
| 4-Bromophenyl phenyl ether | H, T | 1-(p-Chlorobenzoyl)-5-methoxy-2-methylindole-3-acetic acid | A, H |
| Brucine | A, H | | |
| 2-Brutanone peroxide | A, H | | |
| BUFEN | A | p-Chloro-m-cresol | H, T |
| Butaphene | A | Chlorodibromomethane | T |
| n-Butyl alcohol | T | 1-Chloro-2,3-epoxybutane | H |
| Butyl benzyl phthalate | H | | |
| 2-sec-Butyl-4,6-dinitro-phenol (DNBP) | A, H | 1-Chloro-2,3-epoxypropane | T |
| Cadmium and compounds, N.O.S. | H | CHLOROETHENE NU | T |
| | | Chloroethyl vinyl ether | T |
| Calcium chromate | H, T | 2-Chloroethyl vinyl ether | H |
| Calcium cyanide | A, H | | |
| CALDON | A | Chloroethene | T |
| Carbolic acid | T | Chloroform | H, T |
| Carbon disulfide | A, H | Chloromethane | H, T |
| Carbon tetrachloride | T | Chloromethyl methyl ether | H, T |
| Carbonyl fluoride | T | | |

(continued)

TABLE B-1 (continued)

| Compound | RCRA Pollutant Group | Compound | RCRA Pollutant Group |
|---|---|---|---|
| 2-Chloronaphthalene | H, T | DDE | H |
| 2-Chlorophenol | H, T | DDT | H, T |
| 1-(o-Chlorophenyl) thiourea | A, H | DFP | A |
| | | Diallate | H, T |
| 3-Chloropropionitrile | A, H | Dibenz[a,h]acridine | H |
| alpha-Chlorotoluene | A, H | Dibenz[a,j]acridine | H |
| Chlorotoluene, N.O.S. | H | Dibenz[a,h]anthracene (Dibenzo[a,h]anthracene) | H, T |
| 4-Chloro-o-toluidine hydrochloride | T | | |
| Chromium and compounds, N.O.S. | H | 7H-Dibenzo[c,g] carbazole | H |
| Chrysene | H T | Dibenzo[a,e]pyrene | H |
| C.I. 23060 | T | Dibenzo[a,h]pyrene | H |
| Citrus red No.2 | H | Dibenzo[a,i]pyrene | H, T |
| Copper cyanide | A, H | Dibromochloromethane | T |
| Creosote | H, T | 1,2-Dibromo-3-chloro-propane | H, T |
| Cresols | T | | |
| CRETOX | A | 1,2-Dibromoethane | H, T |
| Coumadin | A | Dibromomethane | H, T |
| Coumafen | A | Di-n-butyl-phthalate | H, T |
| Cresylic acid | T | Dichlorobenzene, N.O.S. | H |
| Crotonaldehyde | H T | 1,2-Dichlorobenzene | T |
| Cumene | T | 1,3-Dichlorobenzene | T |
| Cyanides (soluble salts and complexes), N.O.S. | A, H | 1,4-Dichlorobenzene | T |
| | | 3,3'-Dichlorobenzidine | H, T |
| Cyanogen | A, H | 1,4-Dichloro-2-butene | T |
| Cyanogen bromide | A, H | 3,3'-Dichloro-4,4'-diaminobiphenyl | T |
| Cyanogen chloride | A, H | | |
| Cyanomethane | T | Dichlorodifluoromethane | T |
| Cycasin | H | 1,1-Dichloroethane | H T |
| Cyclodan | A | 1,2-Dichloroethane | H, T |
| Cyclohexane | T | trans-1,2-Dichloroethane | H |
| Cyclohexanone | T | Dichloroethylene, N.O.S. | H |
| 2-Cyclohexyl-4 6-dinitrophenol | A, H | 1,1-Dichloroethylene | H, T |
| | | 1,2-trans-dichloro-ethylene | T |
| Cyclophosphamide | H, T | | |
| D-CON | A | Dichloromethane | H, T |
| Daunomycin | H, T | Dichloromethylbenzene | T |
| DETHMOR | A | 2 4-Dichlorophenol | H, T |
| DETHNEL | A | 2 6-Dichlorophenol | H, T |
| DDD | H, T | | |

(continued)

TABLE B-1 (continued)

| Compound | RCRA Pollutant Group |
|---|---|
| 2,4-Dichlorophenoxy-acetic acid | A, H |
| Dichlorophenylarsine | A, H |
| Dichloropropane | H |
| 1,2-Dichloropropane | H, T |
| Dichloropropanol, N.O.S. | H |
| Dichloropropene, N.O.S. | H |
| 1,3-Dichloropropene | H, T |
| Dicyanogen | A |
| Dieldrin | A, H |
| DIELDREX | A |
| Diepoxybutane | H, T |
| Diethylarsine | A, H |
| O,O-Diethyl-S-[2-(ethylthio) ethyl]ester of phosphothioic acid | A, H |
| 1,2-Diethylhydrazine | H, T |
| O,O-Diethyl-S-methyl-ester phosphorodithioic acid | H, T |
| O,O-Diethylphosphoric acid, O-p-nitrophenyl ester | H |
| Diethyl phthalate | H, T |
| O,O-Diethyl-O-(2-pyrazinyl)phosphorothioate | A, H |
| O,O-Diethyl phosphoric acid, O-p-nitrophenyl ester | A |
| Diethyl stilbestrol | H, T |
| Dihydrosafrole | H, T |
| 3,4-Dihydroxy-alpha-(methylamino)-methyl benzyl alcohol | A, H |
| Di-isopropylfluorophosphate (DFP) | A, H |
| DIMETATE (Dimethoate) | A |
| 1,4:5 8-Dimethanonaphthalene, 1,2,3,4,10,10-Hexachloro-1,4,4a,5,8,8a-hexahydro endo, endo | A |
| Dimethaoate | A, H |
| 3,3-Dimethoxybenzidine | H, T |
| Dimethylamine | T |
| p-Dimethylaminoazobenzene | H, T |
| 7,12-Dimethylbenz[a] anthracene | H, T |
| 3,3-Dimethylbenzidine | H, T |
| alpha, alpha-Dimethylbenzylhydroperoxide | T |
| Dimethylcarbamoyl chloride | H, T |
| 1,1-Dimethylhydrazine | H, T |
| 1,2-Dimethylhydrazine | H, T |
| 3,3-Dimethyl-1-(methylthio)-2-butanone-O-[(methylamino)carbonyl] oxime | A, H |
| Dimethylnitrosoamine | H, T |
| alpha, alpha-Dimethylphenethylamine | A, H |
| 2,4-Dimethylphenol | H, T |
| Dimethyl phthalate | H, T |
| Dimethyl sulfate | H, T |
| Dinitrobenzene, N.O.S. | H |
| Dinitrocyclohexylphenol | A |
| 4,6-Dinitro-o-cresol and salts | A, H |
| 2,4-Dinitrophenol | A, H, T |
| 2,4-Dinitrotoluene | H, T |
| 2,6-Dinitrotoluene | H, T |
| Di-n-octylphthalate | H, T |
| DINOSEB | A |

(continued)

TABLE B-1 (continued)

| Compound | RCRA Pollutant Group | Compound | RCRA Pollutant Group |
|---|---|---|---|
| DINOSEBE | A | Fluoranthene | H, T |
| 1,4 Dioxane | H, T | Fluorine | A, H |
| 1,2-Diphenylhydrazine | H, T | 2-Fluoroacetamide | A, H |
| Dipropylamine | T | Fluoroacetic acid, sodium salt | A, H |
| Di-n-propylnitrosamine | H, T | Fluorotrichloromethane | T |
| Disulfoton | A, H | Formaldehyde | H, T |
| 2,4 Dithiobiuret | A, H | FOLODOL-80 | A |
| DNBP | A | FOLODOL-M | A |
| DOLCO MOUSE CEREAL | A | Formic acid | T |
| DOW GENERAL | A | FOSFERNOM | A |
| DOW GENERAL WEED KILLER | A | FRATOL | A |
| DOW SELECTIVE WEED KILLER | A | Fulminate of mercury | A |
| DOWICIDE G | A | FUNGITOX OR | A |
| DYANICIDE | A | Furan | T |
| EASTERN STATES SUOCIDE | A | Furfural | T |
| ELGETOL | A | FUSSOF | A |
| EBDC | T | GALLOTOX | A |
| Endosulfan | A, H | GEARPHOS | A |
| Endrin | A | GERUTOX | A |
| Endrin and metabolites | H | Glycidylaldehyde | H, T |
| Epichlorohydrin | H | Halomethane, N.O.S. | H |
| Epinephrine | A | Heptachlor | A H |
| 1,4-Epoxybutane | T | Heptachlor epoxide (alpha, beta, and gamma isomers) | H |
| Ethyl acetate | T | | |
| Ethyl acrylate | T | | |
| Ethyl cyanide | A, H | Hexachlorobenzene | H, T |
| Ethylenebisdithiocarbamate (EBDC) | H, T | Hexachlorobutadiene | H, T |
| Ethylenediamine | A, H | Hexachlorocyclohexane (all isomers) | H, T |
| Ethyleneimine | A, H | Hexachlorocyclopentadiene | H, T |
| Ethylene oxide | H, T | Hexachloroethane | H, T |
| Ethylene thiourea | H, T | 1,2,3,4,10,10-Hexachloro-1,4,4a,5,8,8a-hexahydro-1,4:5,8-endo, endo-dimethanonaphthalene | A, H |
| Ethyl ether | T | | |
| Ethylmethacrylate | T | | |
| Ethylmethanesulfonate | H, T | | |
| Ethylnitrile | T | | |
| FASCO FASCRAT POWDER | A | | |
| FEMMA | A | Hexachlorophene | T |
| Ferric cyanide | A | | |
| Firemaster T23P | T | | |

(continued)

TABLE B-1 (continued)

| Compound | RCRA Pollutant Group | Compound | RCRA Pollutant Group |
|---|---|---|---|
| 1,4,5,6,7,7-Hexa-chloro-cyclic-5-nor-bornene-2, 3-dimethanol sulfite | A | Lead phosphate | H, T |
| | | Lead subacetate | H, T |
| | | LEYTOSAN | A |
| | | LIQUIPHENE | A |
| Hexachloropropene | A, H | Maleic anhydride | H, T |
| Hexaethyl tetraphosphate | A, H | Maleic hydrazide | T |
| HOSTAQUICK or HOSTAQUIK | A | Malononitrile | H, T |
| Hydrazine | H, T | MALIK | |
| Hydrazomethane | A | MAREVAN | |
| Hydrocyanic acid | A, H | MAR-FRIN | A |
| Hydrofluoric acid | T | MARTIN'D MAR-FRIN | A |
| Hydrogen sulfide | H, T | MAVERAN | A |
| Hydroxybenzene | T | MEGATOX | A |
| Hydroxydimethyl arsine oxide | T | MEK Peroxide | T |
| | | Melphalan | H, T |
| ILLOXOL | A | Mercury and Compounds, N.O.S. | H |
| 4,4-(Imidocarbonyl) bis(N, N-dimethyl) aniline | T | Mercury | T |
| | | Mercury fulminate | A |
| Ideno (1,2,3-c,d) pyrene | H, T | MERSOLITE | A |
| | | METACID 50 | A |
| INDOCI | A | MATAFOS | A |
| Indomethacin | A | METAPHOR | A |
| INSECTOPHENE | A | METAPHOS | A |
| Iodomethane | H, T | METASOL 30 | A |
| Iron Dextran | T | Methacronylonitrile | T |
| Isobutyl alcohol | T | Methanethiol | T |
| Isocyanic acid methyl ester | A, H | Methanol | T |
| | | Methapyrilene | H, T |
| Isodrin | A | Methomyl | A, H |
| Isosafrole | H, T | 2-Methylaziridine | A, H |
| Kepone | H, T | Methyl chlorocarbonate | T |
| KILOSEB | A | Methyl chloroform | T |
| KOP-THIODAN | A | 3-Methylcholanthrene | H, T |
| KWIK-KIL | A | Methyl chloroformate | T |
| KWIKSAN | A | METHYL-E 605 | A |
| KUMADER | A | 4, 4-Methylene-bis-(2-chloroaniline) | H, T |
| Lasiocarpine | H, T | | |
| Lead and Compounds, N.O.S. | H | Methyl ethyl ketone [MEK] | H, T |
| Lead acetate | | | |

(continued)

TABLE B-1 (continued)

| Compound | RCRA Pollutant Group | Compound | RCRA Pollutant Group |
|---|---|---|---|
| Methyl ethyl ketone peroxide | T | Nitrogen mustard and hydrochloride salt | H |
| Methyl hydrazine | A, H | Nitrogen mustard N-oxide and hydrochloride salt | H |
| Methyl iodide | T | Nitrogen perioxide | A, H |
| Methyl isobutyl ketore | T | Nitrogen tetroxide | A, H |
| Methyl isocyanate | A | Nitroglycerine | A, H |
| 2-Methyllactonitrile | A, H | 4-Nitrophenol | H, T |
| Methyl methacrylate | H, T | 2-Nitropropane | T |
| Methyl methanesulfonate | H | 4-Nitroquinoline-1-oxide | H |
| 2-Methyl-2-(methylthio) propionaldehyde-o-(methylcarbonyl) oxime | A, H | Nitrosamine, N.O.S. | H |
| | | N-Nitrosodi-N-butylamine | H, T |
| N-Methyl-N-nitro-N-nitrosoguanidine | H, T | N-Nitrosodiethanolamine | H, T |
| | | N-Nitrosodiethylamine | H, T |
| METHYL NIRON | A | N-Nitrosodimethylamine | A, H |
| Methyl parathion | A, H | N-Nitrosodiphenylamine | A, H |
| Methylthiouracil | H, T | N-Nitrosodi-N-propylamine | H, T |
| METRON | A | | |
| Mitomycin C | T | N-Nitroso-N-ethylurea | H, T |
| MOLE DEATH | A | N-Nitrosomethylethylamine | H |
| MOUSE-NOTS | A | | |
| MOUSE-RID | A | N-Nitroso-N-methylurea | H, T |
| MOUSE-TOX | A | N-Nitroso-N-methylurethane | H, T |
| MUSCIMOL | A | | |
| Mustard gas | H | N-Nitrosomethylvinylamine | A, H |
| Naphthalene | H, T | | |
| 1,4-Naphthoquinone | H, T | N-Nitrosomorpholine | H |
| 1-Naphthylamine | H, T | N-Nitrosohornicotine | H |
| 2-Naphthylamine | H, T | N-Nitrosopiperidine | H, T |
| 1-Naphthyl-2-thiourea | A, H | N-Nitrosopyrrolidine | H, T |
| Nickel and compounds, N.O.S. | H | N-Nitrososarcosine | H |
| | | 5-Nitro-o-toluidine | H, T |
| Nickel carbonyl | A, H | NYLMERATE | A |
| Nickel cyanide | A, H | OCTALOX | A |
| Nicotine and salts | A, H | Octamethylpyrophosphoramide | A, H |
| Nitric oxide | A, H | | |
| p-Nitroaniline | A, H | OCTAN | A |
| Nitrobenzene | H, T | Oleyl alcohol condensed with 2 moles ethylene oxide | A, H |
| Nitrobenzol | T | | |
| Nitrogen dioxide | A, H | | |
| | | OMPA | A |

(continued)

TABLE B-1 (continued)

| Compound | RCRA Pollutant Group | Compound | RCRA Pollutant Group |
|---|---|---|---|
| OMPACIDE | A | N-Phenylthiourea | A, H |
| OMPAX | A | PHILIPS 1861 | A |
| Osmium tetroxide | A, H | PHIX | A |
| 7-Oxabicyclo[2.2.1] heptane-2, 3-dicarboxylic acid | A, H | Phorate | A |
| | | Phosgene | A, H |
| | | Phosphine | A, H |
| PANIVARFIN | A | Phosphorothioic acid, O,O-dimethyl ester, O-ester with N, N-dimethyl benezene sulfonamide | A, H |
| PANORAM | A | | |
| PANTHERINE | A | | |
| PANWARFIN | A | | |
| Paraldehyde | T | | |
| Parathion | A, H | Phosphorothioic acid O, O-dimethyl-O-(p-nitrophenyl) ester | A |
| PCNB | T | | |
| PCP | A | | |
| PENNCAP-M | A | Phosphorous sulfide | T |
| PENOXYL CARBON N | A | Phthalic acid esters, N.O.S. | H |
| Pentachlorobenzene | H, T | | |
| Pentachloroethane | H, T | Phthalic anhydride | H, T |
| Pentachloronitrobenzene (PCNB) | H, T | 2-Picoline | T |
| | | PIED PIPER MOUSE SEED | A |
| Pentachlorophenol | A, H | Polychlorinated biphenyl, N.O.S. | H |
| Pentachlorophenate | A | | |
| 1,3-Pentadiene | T | Potassium cyanide | A, H |
| PENTAKILL | A | Potassium silver cyanide | A, H |
| PENTASOL | A | PREMERGE | A |
| PENWAR | A | Pronamide | H, T |
| PERMICIDE | A | 1,2-Propanediol | A, H |
| PERMAGUARD | A | 1,3-Propane sultone | H, T |
| PERMATOX | A | Propargyl alcohol | A |
| PERMITE | A | Propionitrile | A, H |
| PERTOX | A | n-Propylamine | T |
| Perc | T | Propylthiouracil | H |
| Perchloroethylene | T | 2-Propyn-1-ol | A, H |
| PESTOX | A | PROTHROMADIN | A |
| Phenacetin | H, T | Pyridine | H, T |
| PHENMAD | A | QUICKSAM | A |
| Phenol | H, T | Quinones | T |
| PHENOTAN | A | QUINTOX | A |
| Phenyl dichloroarsine | A, H | RAT AND MICE BAIT | A |
| Phenyl mercaptan | A | RAT-A-WAY | A |
| Phenylmercury acetate | A, H | RAT-B-GON | A |

(continued)

TABLE B-1 (continued)

| Compound | RCRA Pollutant Group | Compound | RCRA Pollutant Group |
|---|---|---|---|
| RAT-O-CIDE #2 | A | Sodium fluoracetate | A |
| RAT-GUARD | A | SODIUM WARFARIN | A |
| RAT-KILL | A | SOLFARIN | A |
| RAT-MIX | A | SOLFOBLACK BB | A |
| RATS-NO-MORE | A | SOLFOBLACK SB | A |
| RAT-OLA | A | Streptozotocin | H, T |
| RATOREX | A | Strontium sulfide | A, H |
| RATTUNAL | A | Strychnine and salts | A, H |
| RAT-TROL | A | SUBTEX | A |
| RO-DETH | A | SYSTAM | A |
| RO-DEX | A | 2,4,5-T | T |
| ROSEX | A | TAG FUNGICIDE | A |
| ROUGH AND READY MOUSE MIX | A | TEKWAISA | A |
| | | TEMIC | A |
| Reserpine | H, T | TEMIK | A |
| Resorcinol | T | TERM-I-TROL | A |
| Saccharin | H, T | 1,2,4,5-Tetrachloro-benzene | H, T |
| Safrole | H, T | | |
| SANASEED | A | 2,3,7,8-Tetrachloro-dibenzo-p-dioxin (TCDD) | H |
| SANTOBRITE | A | | |
| SANTOPHEN | A | Tetrachloroethane N.O.S. | H |
| SANTOPHEN 20 | A | | |
| SCHRADAN | A | 1,1,1,2-Tetrachloro-ethane | H |
| Selenious acid | H, T | | |
| Selenium and compounds, N.O.S. | H | 1,1,2,2-Tetrachloro ethane | H, T |
| Selenium sulfide | H, T | Tetrachloroethene | H, T |
| Selenourea | A, H | Tetrachloroethylene | H, T |
| Silver and compounds, N.O.S. | H | Tetrachloromethane | H, T |
| | | 2,3,4,6-Tetrachloro-phenol | H, T |
| Silver cyanide | A, H | | |
| Silvex | T | Tetraethyldithiopyro-phosphate | A, H |
| SMITE | A | | |
| SPARIC | A | Tetraethyl lead | A, H |
| SPOR-KIL | A | Tetraethylpyrophosphate | A, H |
| SPRAY-TROL BRAND RODEN-TROL | A | Tetrahydrofuran | T |
| | | Tetranitromethane | A |
| SPURGE | A | Tetraphosphoric acid, hexaethyl ester | A |
| Sodium azide | A | | |
| Sodium coumadin | A | TETROSULFUR BLACK PB | A |
| Sodium cyanide | A, H | TETROSULPHUR PBR | A |

(continued)

TABLE B-1 (continued)

| Compound | RCRA Pollutant Group | Compound | RCRA Pollutant Group |
|---|---|---|---|
| Thallium and compounds, N.O.S. | H | 2,4,5-Trichloro-phenoxyacetic acid | H, T |
| Thallic oxide | A, H | 2,4,5-Trichloro-phenoxypropionic acid | H |
| Thallium acetate | H, T | 2,4,5-Trichloro-phenoxypropionic acid | T |
| Thallium carbonate | H, T | alpha, alpha, alpha-Trichlorotoluene | |
| Thallium nitrate | H, T | Trichloropropane, N.O.S. | H |
| Thallium peroxide | A | TRI-CLENE | T |
| Thallium selenite | A, H | O,O,O-Triethyl phos-phorothioate | H |
| Thallium sulfate | A, H | Trinitrobenzene | H, T |
| THIFOR | A | Tris(1-azridinyl) phosphine sulfide | H |
| THIMUL | A | Tris(2,3-dibromo-propyl) phosphate | H, T |
| Thiocetamide | H, T | Trypan blue | H, T |
| THIODAN | A | TWIN LIGHT RAT AWAY | A |
| THIOFOR | A | Uracil mustard | H, T |
| THIOMUL | A | Urethane | H, T |
| THIONEX | A | USAF-RH-8 | A |
| THIOPHENIT | A | USAF EK-4890 | A |
| Thiosemicarbazide | A, H | Vanadic acid, ammonium salt | A, H |
| Thiosulfan tionel | A | Vanadium pentoxide | A |
| Thiourea | H, T | Vanadium pentoxide (dust) | H |
| Thiuram | A, H | Vinyl chloride | H, T |
| THOMPSON'S WOOD FIX | A | VOFATOX | A |
| TIOVEL | A | WANADU | A |
| Toluene | H, T | WARCOUMIN | A |
| Toluenediamine | H, T | WARFARIN SODIUM | A |
| o-Toluidine hydrochloride | H, T | WARFICIDE | A |
| Toluene diisocyanate | T | WOFOTOX | A |
| Tolylene diisocyanate | H | Xylene | T |
| Toxaphene | H, T | YANOCK | A |
| 2,4,5-TP | T | YASOKNOCK | A |
| Tribromomethane | H, T | ZIARNIK | A |
| 1,2,4-Trichlorobenzene | H | Zinc cyanide | A, H |
| 1,1,1-Trichloroethane | H, T | Zinc phospide | A, H |
| 1,1,2-Trichloroethane | H, T | ZOOCOUMARIN | A |
| Trichloroethene | H, T | | |
| Trichloroethylene | H, T | | |
| Trichlorofluoromethane | T | | |
| Trichloromethanethiol | A, H | | |
| 2,4,5-Trichlorophenol | H, T | | |
| 2,4,6-Trichlorophenol | H, T | | |

TABLE B-1 (continued)

1. The abbreviation N.O.S. signifies those members of the general class "not otherwise specified" by name in this listing.

   a. RCRA Pollutant Groups:

      A. Acute hazardous
         [Sec. 261.33 (e)]

      H. Hazardous
         [Appendix VIII]

      T. Toxic
         [Sec. 261.33 (f)]

# APPENDIX C

## UNIT PROCESS SUMMARIES - SANITARY LANDFILL LEACHATE TREATMENT

Appendix C contains summaries of the treatment of sanitary landfill leachate by the following processes:

- chemical oxidation
- chemical precipitation
- ion exchange
- reverse osmosis

Several applications using different oxidizing agents, coagulants, and exchange resins are presented. These results should not be related directly to hazardous waste leachate treatment. However, they do provide an indication of treatment effectiveness and represent another reference point which can be used in treatment process formulation. Tables C-1 through C-24 were prepared by Monsanto Research Corporation for use in this manual.

TABLE C-1. CHLORINE AND SODIUM HYPOCHLORITE TREATMENT OF RAW LEACHATE [1]

| | Cook and Foree | | | | | |
|---|---|---|---|---|---|---|
| | Concentration, mg/L[a] | | | Concentration, mg/L[a] | | |
| Parameter | Influent | Effluent | Percent removal | Influent | Effluent | Percent removal |
| Dosage $Cl_2$[b] | 0 | 65.5 | | 0 | 566 | |
| Dosage NaClO | 0 | 3,430 | | 0 | 2,970 | |
| COD | 330 | 220 | 33 | 320 | 260 | 19 |

| | Cook and Foree | | | | | |
|---|---|---|---|---|---|---|
| | Concentration, mg/L[a] | | | Concentration, mg/L[a] | | |
| Parameter | Influent | Effluent | Percent removal | Influent | Effluent | Percent removal |
| Dosage $Cl_2$[b] | 0 | 47.6 | | 0 | 310 | |
| Dosage NaClO | 0 | 2,500 | | 0 | 1,630 | |
| COD | 270 | 120 | 56 | 290 | 90 | 69 |

Note: Blanks indicate parameter not determined.

[a]Chlorine dosages provided by liquid chlorine bleach.

[b]Except dosage $Cl_2$ in mL/L.

TABLE C-2. CHLORINE TREATMENT OF RAW LEACHATE [2, 3]

| Parameter | Chian and DeWalle Concentration, mg/L[a] Influent | Chian and DeWalle Concentration, mg/L[a] Effluent | Chian and DeWalle Percent removal | Ho, et al. Concentration, mg/L[a] Influent | Ho, et al. Concentration, mg/L[a] Effluent | Ho, et al. Percent removal |
|---|---|---|---|---|---|---|
| Dosage | 0 | 2,000 | | 0 | 400 | |
| COD | 4,800 | 3,740 | 22 | 341 | 297 | 13 |
| pH initial | | | | 7.0 | 2.2 | |
| pH final | | | | 7.0 | 7.0 | |
| TS | | | | 482 | 1,960 | -[b] |
| Chloride | | | | 98.6 | 768 | -[b] |
| Iron | | | | 3.7 | 0.2 | 95 |

| Parameter | Ho, et al. Concentration, mg/L[a] Effluent | Ho, et al. Percent removal | Ho, et al. Concentration, mg/L[a] Effluent | Ho, et al. Percent removal | Ho, et al. Concentration, mg/L[a] Effluent | Ho, et al. Percent removal |
|---|---|---|---|---|---|---|
| Dosage | 800 | | 1,200 | | 1,540 | |
| COD | 286 | 16 | 257 | 25 | 316 | 7.3 |
| pH initial | 2.0 | | 1.75 | | 1.6 | |
| pH final | 7.0 | | 7.0 | | 7.0 | |
| TS | 3,060 | -[b] | 4,200 | -[b] | 5,142 | -[b] |
| Chloride | 1,220 | -[b] | 1,900 | -[b] | 2,280 | -[b] |
| Iron | ND | >99 | ND | >99 | ND | >99 |

Note: Blanks indicate parameter not determined.

TABLE C-3. CHLORINE AND CALCIUM HYPOCHLORITE TREATMENT OF RAW LEACHATE [2]

| Parameter | Chian and DeWalle Concentration, mg/L Influent | Chian and DeWalle Concentration, mg/L Effluent | Chian and DeWalle Percent removal |
|---|---|---|---|
| Dosage $Cl_2$ | 0 | | |
| Dosage $Ca(ClO)_2$ | 0 | 1,000 | |
| COD | 139 | 139 | 0 |

Note: Blanks indicate parameter not determined.

TABLE C-4. CALCIUM HYPOCHLORITE TREATMENT OF RAW LEACHATE [3]

| Parameter | Concentration, mg/L[a] Influent | Concentration, mg/L[a] Effluent | Percent removal | Concentration, mg/L[a] Effluent | Percent removal | Concentration, mg/L[a] Effluent | Percent removal |
|---|---|---|---|---|---|---|---|
| Dosage | 0 | 1,000 | | 2,000 | | 4,000 | |
| COD | 1,465 | 1,420 | 3.1 | 1,420 | 3.1 | 1,126 | 23 |
| pH initial | 7.8 | 8.0 | | 7.95 | | 8.15 | |
| pH final | 7.0 | 7.0 | | 7.0 | | 7.0 | |
| TS | 1,748 | 2,478 | -[b] | 3,268 | -[b] | 5,392 | -[b] |
| Iron | 35 | ~0 | >99 | ~0 | >99 | ~0 | >99 |

| | Ho, et al. | | | | | |
|---|---|---|---|---|---|---|
| Parameter | Concentration, mg/L[a] Effluent | Percent removal | Concentration, mg/L[a] Effluent | Percent removal | Concentration, mg/L[a] Effluent | Percent removal |
| Dosage | 8,000 | | 12,000 | | 15,000 | |
| COD | 762 | 48 | 908 | 38 | 1,000 | 32 |
| pH initial | 9.0 | | 9.9 | | 10.2 | |
| pH final | 7.0 | | 7.0 | | 7.0 | |
| TS | 9,274 | -[b] | 13,910 | -[b] | 16,700 | -[b] |
| Iron | ~0 | >99 | ~0 | >99 | ~0 | >99 |

Note: Blanks indicate parameter not determined.

[a]Except for pH in pH units and hardness in mg/L $CaCO_3$.

[b]Negative percent removal.

TABLE C-5. POTASSIUM PERMANGANATE TREATMENT OF RAW LEACHATE [3]

| Parameter | Ho, et al. Concentration, mg/L[a] Influent | Effluent | Percent removal | Concentration, mg/L[a] Effluent | Percent removal | Concentration, mg/L[a] Effluent | Percent removal | Concentration, mg/L[a] Effluent | Percent removal | Concentration, mg/L[a] Effluent | Percent removal |
|---|---|---|---|---|---|---|---|---|---|---|---|
| Dosage | 0 | 10 | | 25 | | 50 | | 100 | | 500 | |
| COD | 10,900 | 10,820 | 0.73 | 10,700 | 1.8 | 10,350 | 5.0 | 10,320 | 5.3 | 9,800 | 10 |
| pH | 5.7 | 5.7 | | 5.8 | | 5.8 | | 5.8 | | 5.8 | |
| TS | 7,040 | 7,000 | 0.57 | 7,000 | 0.57 | 6,900 | 2.0 | 6,800 | 3.4 | 6,700 | 4.8 |
| Alkalinity | 2,070 | 2,065 | 0.24 | 2,065 | 0.24 | 2,065 | 0.24 | 2,062 | 0.39 | 2,060 | 0.48 |
| Chloride | 557 | 557 | 0 | 557 | 0 | 557 | 0 | 557 | 0 | 560 | -[b] |
| Iron | 290 | 280 | 3.4 | 220 | 24 | 180 | 38 | 76 | 74 | 3 | 99 |

| Parameter | Ho, et al. Concentration, mg/L[a] Effluent | Percent removal | Concentration, mg/L[a] Effluent | Percent removal | Concentration, mg/L[a] Effluent | Percent removal | Concentration, mg/L[a] Effluent | Percent removal | Concentration, mg/L[a] Effluent | Percent removal |
|---|---|---|---|---|---|---|---|---|---|---|
| Dosage | 1,000 | | 2,500 | | 5,000 | | 7,500 | | 10,000 | |
| COD | 9,700 | 11 | 9,600 | 12 | 9,350 | 14 | 9,100 | 17 | 8,860 | 19 |
| pH | 5.8 | | 5.8 | | 5.8 | | 5.8 | | 5.8 | |
| Alkalinity | | | | | | | | | | |
| Chlorine | | | | | | | | | | |
| Iron | | | | | | | | | | |

Note: Blanks indicate parameter not determined.

[a]Except for pH in pH units and total hardness and alkalinity in mg/L $CaCO_3$.

[b]Negative percent removal.

TABLE C-6. OZONE TREATMENT OF RAW LEACHATE [2, 3]

| Parameter | Ho, et al: Concentration, mg/L[a] Influent | Effluent | Percent removal | Concentration, mg/L[a] | Percent removal | Chian and DeWalle: Concentration, mg/L[a] Influent | Effluent | Percent removal |
|---|---|---|---|---|---|---|---|---|
| Dosage | 0 | 7,700 | | 7,700 | | 0 | 34 | |
| COD | 7,190 | 6,790 | 5.6 | 4,500 | 37 | 139 | 108 | 22 |
| TOC | | | | | | | | |
| pH initial | 7.4 | 7.4 | | 7.4 | | | | |
| pH final | 7.5 | 7.8 | | 7.5 | | | | |
| TDS | 11,730 | 11,330 | 3.4 | 11,280 | 3.8 | | | |
| Chloride | 3,640 | 3,640 | 0 | 3,640 | 0 | | | |
| Iron | 40 | 8 | 80 | 2 | 95 | | | |
| Contact time | 0 | 1 | | 4 | | 0 | 4 | |

| Parameter | Chian and DeWalle: Concentration, mg/L[a,b] Influent | Effluent | Percent removal | Concentration, mg/L[a,c] Influent | Effluent | Percent removal |
|---|---|---|---|---|---|---|
| Dosage | 0 | 600 | | 0 | 400 | |
| COD | 1,250 | 788 | 37 | 627 | 326 | 48 |
| TOC | | | | 250 | 130 | 48 |
| pH initial | | | | | | |
| pH final | | | | | | |
| TDS | | | | | | |
| Chloride | | | | | | |
| Iron | | | | | | |
| Contact time | 0 | 3 | | 0 | 3 | |

Note: Blanks indicate parameter not determined.

[a]Except for contact time in hours.

[b]Ozonation of anaerobic filter effluent.

[c]Ozonation of aerated lagoon effluent.

## TABLE C-7. LIME TREATMENT OF RAW LEACHATE [1, 2, 3, 4]

| Parameter | Cook and Forss Concentration, mg/L Influent | Cook and Forss Concentration, mg/L Effluent | Cook and Forss Percent removal | Ho, et al. Concentration, mg/L Influent | Ho, et al. Concentration, mg/L Effluent | Ho, et al. Percent removal | Ho, et al. Effluent concentration, mg/L[a] | Ho, et al. Percent removal | Ho, et al. Effluent concentration, mg/L[a] | Ho, et al. Percent removal |
|---|---|---|---|---|---|---|---|---|---|---|
| Dosage | 0 | 2,760 | | 0 | 870 | | 1,020 | | 1,150 | |
| COD | 17,000 | 14,900 | 13 | 10,800 | 10,600 | 1.9 | 10,400 | 3.7 | 9,970 | 7.7 |
| pH | 11.0 | 10.8 | | 6.25 | 9.0 | | 9.5 | | 10.0 | |
| TOC | | | | | | | | | | |
| TSS | 545 | 79 | 86 | | | | | | | |
| VSS | | | | | | | | | | |
| DS | | | | | | | | | | |
| BOD | | | | | | | | | | |
| Orthophosphorous | | 0 | | | | | | | | |
| Alkalinity | | | | 2,220 | 2,700 | -[b] | 3,020 | -[b] | 3,080 | -[b] |
| Chlorine | | | | 502 | 530 | -[b] | 555 | -[b] | 553 | -[b] |
| Iron | | | | 325 | 3 | 99 | 1 | >99 | 0.5 | >99 |

| Parameter | Ho, et al. Effluent concentration, mg/L[a] | Ho, et al. Percent removal | Ho, et al. Effluent concentration, mg/L[a] | Ho, et al. Percent removal | Ho, et al. Effluent concentration, mg/L[a] | Ho, et al. Percent removal | Ho, et al. Effluent concentration, mg/L[a] | Ho, et al. Percent removal | Ho, et al. Concentration,[c] mg/L Influent | Ho, et al. Concentration,[c] mg/L Effluent | Ho, et al. Percent removal |
|---|---|---|---|---|---|---|---|---|---|---|---|
| Dosage | 1,280 | | 1,390 | | 1,600 | | 1,840 | | 0 | 1,060 | |
| COD | 10,300 | 4.6 | 10,700 | 0.93 | 10,000 | 6.5 | 10,420 | 3.5 | 558 | 563 | -[b] |
| pH | 10.5 | | 11.0 | | 11.5 | | 12.0 | | 7.75 | 9.0 | |
| TOC | | | | | | | | | | | |
| TSS | | | | | | | | | | | |
| TS | 6,800 | 1.7 | 6,930 | -[b] | 7,540 | -[b] | 7,470 | -[b] | 6,188 | 5,340 | 14 |
| VSS | | | | | | | | | | | |
| DS | | | | | | | | | | | |
| BOD | | | | | | | | | | | |
| Orthophosphorous | | | | | | | | | | | |
| Alkalinity | 3,200 | -[b] | 3,290 | -[b] | 3,840 | -[b] | 3,920 | -[b] | | | |
| Chloride | 569 | -[b] | 572 | -[b] | 593 | -[b] | 609 | -[b] | 2,580 | 2,240 | 13 |
| Iron | 0.5 | >99 | 0.5 | >99 | 0.5 | >99 | 0.5 | >99 | 20.0 | 1.7 | 92 |

| Parameter | Ho, et al. Effluent concentration, mg/L[a] | Ho, et al. Percent removal | Ho, et al. Concentration,[d] mg/L Influent | Ho, et al. Concentration,[d] mg/L Effluent | Ho, et al. Percent removal | Ho, et al. Effluent concentration, mg/L[a] | Ho, et al. Percent removal |
|---|---|---|---|---|---|---|---|
| Dosage | 2,700 | | 0 | 470 | | 1,400 | |
| COD | 515 | 7.7 | 366 | 366 | 0 | 260 | 29 |
| pH | 11.0 | | 8.95 | 10.0 | | 11.5 | |
| TOC | | | | | | | |
| TSS | | | | | | | |
| TS | 4,876 | 21 | 4,876 | 4,180 | 3.2 | 3,690 | 15 |
| VSS | | | | | | | |
| DS | | | | | | | |
| BOD | | | | | | | |
| Orthophosphorous | | | | | | | |
| Alkalinity | | | | | | | |
| Chloride | 2,150 | 17 | 1,730 | 1,600 | 7.5 | 1,670 | 3.5 |
| Iron | ND | >99 | 15.0 | ND | >99 | ND | >99 |

(continued)

## TABLE C-7 (continued)

| Parameter | Chian and DeWalle | | | | | | | | | |
|---|---|---|---|---|---|---|---|---|---|---|
| | Effluent concentration, mg/L[a] | Percent removal | Effluent concentration, mg/L[a] | Percent removal | Effluent concentration, mg/L[a] | Percent removal | Effluent concentration, mg/L[a] | Percent removal | Effluent concentration, mg/L[a] | Percent removal |
| Dosage | 1,000 | | 1,800 | | 2,000 | | 4,000 | | 5,000 | |
| COD | | | | | | | | | | |
| pH | 8.5 | | 8.9 | | 9.0 | | 9.8 | | 10.5 | |
| TOC | 708 | -[b] | 760 | -[b] | 760 | -[b] | 690 | 4.2 | 660 | 8.3 |
| TSS | | | | | | | | | | |
| TS | | | | | | | | | | |
| VSS | | | | | | | | | | |
| DS | | | | | | | | | | |
| BOD | | | | | | | | | | |
| Orthophosphorous | | | | | | | | | | |
| Alkalinity | | | | | | | | | | |
| Chlorine | | | | | | | | | | |
| Iron | | | | | | | | | | |

| Parameter | Chian and DeWalle | | | | | | | |
|---|---|---|---|---|---|---|---|---|
| | Effluent concentration, mg/L[a] | Percent removal | Effluent concentration, mg/L[a] | Percent removal | Effluent concentration, mg/L[a] | Percent removal | Effluent concentration, mg/L[a] | Percent removal |
| Dosage | 6,000 | | 7,000 | | 7,500 | | 8,000 | |
| COD | | | | | | | | |
| pH | 11.8 | | 12.2 | | 12.2 | | 12.2 | |
| TOC | 630 | 13 | 630 | 13 | 630 | 13 | 600 | 17 |
| TSS | | | | | | | | |
| TS | | | | | | | | |
| VSS | | | | | | | | |
| DS | | | | | | | | |
| BOD | | | | | | | | |
| Orthophosphorous | | | | | | | | |
| Alkalinity | | | | | | | | |
| Chlorine | | | | | | | | |
| Iron | | | | | | | | |

Note: Blanks indicate parameter not determined.
ND - not detected.

[a]Except for pH in pH units and alkalinity in mg/L $CaCO_3$.

[b]Negative percent removal.

[c]Lime treatment of anaerobic digester effluent.

[d]Lime treatment of anaerobic digester effluent polished by aerated lagoon.

[e]Lime treatment of anaerobic filter effluent.

TABLE C-8. LIME, FERRIC CHLORIDE, AND FERROSULFIDE TREATMENT OF RAW LEACHATE [1]

| Cook and Foree | | | |
|---|---|---|---|
| | Concentration, mg/L[a] | | |
| Parameter | Influent | Effluent | Percent removal |
| Dosage lime | 0 | 1,640 | |
| Dosage $FeCl_3$ | 0 | 1,000 | |
| Dosage $Fe_2(So_4)_3$ | 0 | 1,450 | |
| COD | 17,000 | 15,100 | 11 |
| pH initial | | 8.0 | |
| pH final | | 6.2 | |
| TSS | 544 | 150 | 72 |
| VSS | | 75 | |

Note: Blanks indicate parameter not determined.

[a]Except pH in pH units.

TABLE C-9. LIME AND POLYMER TREATMENT OF RAW LEACHATE [1]

| Cook and Foree | | | |
|---|---|---|---|
| | Concentration, mg/L[a] | | |
| Parameter | Influent | Effluent | Percent removal |
| Dosage lime | 0 | 1,000 | |
| COD | 17,000 | 15,100 | |
| pH initial | | 8.0 | |
| pH final | | 7.2 | |
| TSS | 544 | 156 | 71 |
| VSS | | 77 | |
| Orthophosphorus | | 0.28 | |

Note: Blanks indicate parameter not determined.

[a]Except pH in pH units.

TABLE C-10. LIME AND ALUM TREATMENT OF RAW LEACHATE [2, 3]

| | Ho, et al. | | | Chian and DeWalle | | |
|---|---|---|---|---|---|---|
| | Concentration, mg/L[a] | | | Concentration, mg/L[a] | | |
| Parameter | Influent | Effluent | Percent removal | Influent | Effluent | Percent removal |
| Dosage lime | 0 | 1,640 | | 4,800 | 2,280 | 40 |
| Dosage alum | 0 | 600 | | | | |
| COD | 17,000 | 14,800 | | | | |
| pH initial | | 8.0 | | | | |
| pH final | | 6.5 | | | | |
| TSS | 544 | 111 | 80 | | | |
| VSS | | 71 | | | | |
| Orthophosphorus | | 0.072 | | | | |

Note: Blanks indicate parameter not determined.

[a]Except pH in pH units.

TABLE C-11. LIME AND AERATION TREATMENT OF RAW LEACHATE [2]

| | Chian and DeWalle | | |
|---|---|---|---|
| | Concentration, mg/L[a] | | |
| Parameter | Influent | Effluent | Percent removal |
| Dosage | 0 | | |
| COD | 1,240 | 1,140 | 8 |

Note: Blanks indicate parameter not determined.

[a]Except for dosage in mL saturated lime/L.

TABLE C-12. LIME AND OZONE TREATMENT OF RAW LEACHATE [5]

| | Bjorkman and Mavinic | | | | | | |
|---|---|---|---|---|---|---|---|
| | Concentration, mg/L[a] | | | Effluent concentration, mg/L[a] | | Effluent concentration, mg/L[a] | |
| Parameter | Influent | Effluent | Percent removal | | Percent removal | | Percent removal |
| Dosage lime | 0 | 1,200 | | 2,350 | | 2,900 | |
| Dosage ozone | 0 | 98 | | 247 | | 108 | |
| COD | 14,000 | 9,210 | 34 | | | | |
| pH | 5.3 | | | | | | |
| TOC | 5,200 | | | | | 2,740 | 47 |
| TSS | | | | 3 | | | |
| TDS | | 6,992 | | | | | |
| Aluminum | 0.40 | | | | | | |
| Calcium | | 570 | | | | | |
| Chromium | 1.14 | | | 0.017 | 96 | | |
| Cobalt | 2.10 | | | | | | |
| Copper | 0.39 | | | | | | |
| Iron | 47 | | | 0.66 | 99 | | |
| Lead | | | | trace | | | |
| Manganese | 10.1 | | | | | 0.036 | >99 |
| Nickel | 0.165 | | | | | | |
| Phosphorous | | | | | | 0.010 | |
| Potassium | 156 | | | 114 | 27 | | |
| Silicon | 36.3 | | | | | | |
| Sodium | 180 | | | | | | |
| Zinc | 12.5 | | | 0.003 | >99 | | |

Note: Blanks indicate parameter not determined.

[a]Except for pH in pH units

## TABLE C-13. ALUM TREATMENT OF RAW LEACHATE [3, 6]

| Parameter | Ho, et al. Concentration, mg/L[a] Influent | Effluent | Percent removal | Effluent concentration, mg/L[a] | Percent removal | Effluent concentration, mg/L[a] | Percent removal | Effluent concentration, mg/L[a] | Percent removal | Effluent concentration, mg/L[a] | Percent removal | Van Fleet, et al. Concentration, mg/L[a] Influent | Effluent | Percent removal |
|---|---|---|---|---|---|---|---|---|---|---|---|---|---|---|
| Dosage | 0 | 10 | | 50 | | 100 | | 500 | | 1,000 | | 0 | 2,700 | |
| COD | 8,520 | 8,730 | 2.1 | 8,400 | 5.8 | 9,100 | -[b] | 8,720 | 2.2 | 8,620 | 3.4 | 2,000 | 1,370 | 31 |
| pH initial | 7.1 | | | 7.0 | | 6.9 | | 6.4 | | 6.0 | | 6.3-7.0 | | |
| pH final | | 7.1 | | 7.1 | | 7.1 | | 7.1 | | 7.1 | | | | |
| TS | 12,300 | 12,300 | 0 | 12,800 | -[b] | 12,000 | 2.4 | 12,400 | -[b] | 13,100 | -[b] | | | 27 |
| Chloride | 2,720 | 2,720 | 0 | 2,720 | 0 | 2,720 | 0 | 2,720 | 0 | 2,720 | 0 | | | |
| Iron | 85 | 80 | 5.9 | 42 | 51 | 34 | 60 | 5 | 94 | 3 | 96 | | | |

Note: Blanks indicate parameter not determined.

[a]Except for pH in pH units.

[b]Negative percent removal.

TABLE C-14. ALUM AND AERATION TREATMENT OF RAW LEACHATE [2]

| Chian and DeWalle | | | |
|---|---|---|---|
| | Concentration, mg/L[a] | | |
| Parameter | Influent | Effluent | Percent removal |
| Dosage | 0 | 180 | |
| COD | 1,234 | 1,110 | 11 |

Note: Blanks indicate parameter not determined.

TABLE C-15. SODIUM HYDROXIDE TREATMENT OF RAW LEACHATE [1]

| Cook and Foree | | | |
|---|---|---|---|
| | Concentration, mg/L[a] | | |
| Parameter | Influent | Effluent | Percent removal |
| Dosage | 0 | 2,660 | |
| COD | 17,000 | 15,400 | 9.4 |
| pH initial | | 11.0 | |
| pH final | | 10.7 | |
| TSS | 544 | 58 | 89 |
| VSS | | 36 | |
| Orthophosphorus | | 0.024 | |

Note: Blanks indicate parameter not determined.

[a]Except pH in pH units.

## TABLE C-16. SODIUM SULFIDE TREATMENT OF RAW LEACHATE [3]

| Parameter | Ho, et al. | | | | | | | | | | | | |
|---|---|---|---|---|---|---|---|---|---|---|---|---|---|
| | Concentration, mg/L[a] | | | | | | | | | | | | |
| | Influent | Effluent | Percent removal | Effluent concentration mg/L[a] | Percent removal | Effluent concentration mg/L[a] | Percent removal | Effluent concentration mg/L[a] | Percent removal | Effluent concentration mg/L[a] | Percent removal | Effluent concentration mg/L[a] | Percent removal |
| Dosage | 0 | 10 | | 25 | | 50 | | 100 | | 500 | | 1,000 | |
| COD | 10,620 | 10,220 | 3.8 | 10,020 | 5.6 | 10,650 | -[b] | 10,200 | 4.0 | 10,170 | 4.2 | 10,600 | 0.19 |
| pH final | 6 | 6 | | 6 | | 6 | | 6.1 | | 6.3 | | 6.4 | |
| TS | 7,200 | 7,300 | -[b] | 7,300 | -[b] | 7,300 | -[b] | 7,300 | -[b] | 7,500 | -[b] | 7,900 | -[b] |
| Alkalinity | 2,242 | 2,270 | -[b] | 2,340 | -[b] | 2,360 | -[b] | 2,400 | -[b] | 2,440 | -[b] | 2,600 | -[b] |
| Chloride | 509 | 509 | 0 | 515 | -[b] | 507 | 0.39 | 505 | 0.79 | 509 | 0 | 510 | -[b] |
| Iron | 315 | 315 | 0 | 315 | 0 | 315 | 0 | 315 | 0 | 270 | 14 | 70 | 78 |

Note: Blanks indicate parameter not determined.

[a] Except pH in pH units and alkalinity in mg/L $CaCO_3$

[b] Negative percent removal

## TABLE C-17. FERRIC CHLORIDE TREATMENT OF RAW LEACHATE [3]

| Parameter | Ho et al. | | | | | | | | | | |
|---|---|---|---|---|---|---|---|---|---|---|---|
| | Concentration, mg/L[a] | | | | | | | | | | |
| | Influent | Effluent | Percent removal | Effluent concentration, mg/L[a] | Percent removal | Effluent concentration, mg/L[a] | Percent removal | Effluent concentration, mg/L[a] | Percent removal | Effluent concentration, mg/L[a] | Percent removal |
| Dosage | 0 | 100 | | 500 | | 1,000 | | 1,000 | | 1,000 | |
| COD | 9,260 | 8,100 | 13 | 8,360 | 9.7 | 8,700 | 6.0 | 8,370 | 9.6 | 7,750 | 16 |
| pH initial | 7.0 | 6.8 | | 6.25 | | 5.85 | | 5.88 | | 5.85 | |
| pH final | 6 | 6 | | 6 | | 6 | | 5 | | 7 | |
| TS | 12,000 | 11,900 | 0.83 | 11,600 | 3.3 | 11,700 | 2.5 | 11,200 | 6.7 | 12,500 | -[b] |
| Chlorine | 2,880 | 2,880 | 0 | 2,880 | 0 | 3,040 | -[b] | 3,640 | -[b] | 3,040 | -[b] |
| Iron | 84 | 66 | 21 | 38 | 55 | 32 | 62 | 59 | 30 | 2 | 98 |

Note: Blanks indicate parameter not determined.

[a] Except pH in pH units.

TABLE C-18. FERROSULFATE TREATMENT OF RAW LEACHATE [2]

| Chian and DeWalle | | | |
|---|---|---|---|
| | Concentration, mg/L[a] | | |
| Parameter | Influent | Effluent | Percent removal |
| Dosage | 0 | 2,500 | |
| COD | 4,800 | 4,100 | 13 |

Note: Blanks indicate parameter not determined.

TABLE C-19. IRON AND AERATION TREATMENT OF RAW LEACHATE [2]

| Chian and DeWalle | | | |
|---|---|---|---|
| | Concentration, mg/L[a] | | |
| Parameter | Influent | Effluent | Percent removal |
| Dosage | 0 | 1,000 | |
| COD | 139 | 139 | 0 |

Note: Blanks indicate parameter not determined.

TABLE C-20. ANION EXCHANGE TREATMENT OF RAW LEACHATE [4]

| | Chian and DeWalle | | | | | |
|---|---|---|---|---|---|---|
| Parameter | Concentration, mg/L[a] | Percent removal | Concentration, mg/L[a] | Percent removal | Concentration, mg/L[a] | Percent removal |
| COD | | 6 | | 37 | | 48 |
| pH initial | 8.8 | | 6.2 | | 6.2 | |
| pH final | 8.9 | | 6.8 | | 7.4 | |
| TOC | | 6 | | 42 | | 43 |
| Resin type | A-7 | | A-7 | | A-7 | |

| | Chian and DeWalle | | | |
|---|---|---|---|---|
| | Concentration, mg/L[a] | Percent removal | Concentration, mg/L[a] | Percent removal |
| COD | | 59 | | 41 |
| pH initial | 8.8 | | 8.8 | |
| pH final | 8.8 | | 8.8 | |
| TOC | | 43 | | 26 |
| Resin type | IRA-938 | | XE-279HP | |

Note: Blanks indicate parameter not determined.

[a]Except pH, in pH units, and resin type.

TABLE C-21. CATION EXCHANGE TREATMENT OF RAW LEACHATE [7]

| Parameter | Poland and Kang | | | | | | | | | | |
|---|---|---|---|---|---|---|---|---|---|---|---|
| | Concentration mg/L[a] | | | | | | | | | | |
| | Influent | Effluent | Percent removal | Effluent concentration, mg/L[a] | Percent removal | Effluent concentration, mg/L[a] | Percent removal | Effluent concentration, mg/L[a] | Percent removal | Effluent concentration, mg/L[a] | Percent removal |
| Dosage | 0 | 1,300 | | 2,000 | | 5,000 | | 10,000 | | 25,000 | |
| COD | 185 | 166 | 10 | 166 | 10 | | | 150 | 19 | 166 | 10 |
| pH | 8.1 | 7.6 | | 7.3 | | 6.9 | | 2.9 | | 2.5 | |
| TDS | 1,040 | 944 | 9.2 | 838 | 19 | 734 | 29 | | | | |
| Acidity | 0 | 105 | -[b] | 120 | -[b] | 210 | -[b] | 400 | -[b] | 470 | -[b] |
| Alkalinity | 560 | 500 | 11 | 430 | 23 | 130 | 77 | | | | |
| Calcium | 29 | 20 | 31 | 7.4 | 74 | 4.9 | 83 | 4.4 | 85 | 1.0 | 97 |
| Magnesium | 18.8 | 9.2 | 51 | 4.5 | 76 | 0.2 | 79 | 0.1 | 99 | | |
| Potassium | 100 | 93 | 7 | 86 | 14 | 32 | 68 | 8.8 | 91 | 2.6 | 97 |
| Sodium | 260 | 262 | -[b] | 240 | 7.7 | 130 | 50 | 40 | 85 | 15.0 | 94 |

Note: Blanks indicate parameter not determined.

[a] Except pH in pH units and alkalinity and acidity in mg/L $CaCO_3$.

[b] Negative percent removal.

TABLE C-22. MIXED RESIN ION EXCHANGE TREATMENT OF RAW LEACHATE [7]

| Parameter | Pohland and Kang | | | | | | | | | | |
|---|---|---|---|---|---|---|---|---|---|---|---|
| | Concentration, mg/L[a] | | Percent removal | Effluent concentration, mg/L[a] | Percent removal | Effluent concentration, mg/L[a] | Percent removal | Effluent concentration, mg/L[a] | Percent removal | Effluent concentration, mg/L[a] | Percent removal |
| | Influent | Effluent | | | | | | | | | |
| Dosage | 0 | 1,300 | | 2,000 | | 5,000 | | 10,000 | | 25,000 | |
| COD | 120 | 68 | 43 | | | 50 | 58 | | | | |
| pH | 8.5 | 8.1 | | 7.7 | | 7.5 | | 5.0 | | 5.5 | |
| TDS | 926 | 728 | 21 | 613 | 34 | 336 | 64 | 118 | 87 | 82 | 91 |
| Alkalinity | 520 | 450 | 13 | 260 | 50 | 100 | 81 | <5 | >99 | <5 | >99 |
| Calcium | 13.2 | 6.6 | 50 | 2.5 | 81 | 0 | 100 | 1.2 | 91 | 0 | 100 |
| Magnesium | 12.6 | 6.0 | 52 | 1.1 | 91 | 0.08 | >99 | 0.05 | >99 | 0.05 | >99 |
| Potassium | 65 | 61 | 6.1 | 58 | 11 | 20 | 69 | 0 | 100 | 0 | 100 |
| Sodium | 198 | 178 | 10 | 142 | 28 | 46 | 77 | 0.35 | >99 | 0.35 | >99 |
| Chloride | 130 | 105 | 19 | 95 | 27 | 62 | 52 | 5 | 96 | <5 | >96 |
| Sulfate | 4.0 | nil | >99 | | | | | | | | |
| Nitrate | 0.4 | nil | >99 | nil | >99 | nil | >99 | nil | >99 | nil | >99 |
| Total phosphate | 0.1 | | | | | | | nil | >99 | | |

[a]Except for pH in pH units and alkalinity in mg/L $CaCO_3$.

TABLE C-23. MIXED RESIN ION EXCHANGE AND CARBON TREATMENT OF RAW LEACHATE [7]

| Parameter | Concentration, mg/L[a] Influent | Concentration, mg/L[a] Effluent | Percent removal | Concentration, mg/L[a] Effluent | Percent removal | Concentration, mg/L[a] Effluent | Percent removal | Concentration, mg/L[a] Effluent | Percent removal | Concentration, mg/L[a] Effluent | Percent removal |
|---|---|---|---|---|---|---|---|---|---|---|---|
| Dosage | 0 | 1,300 | | 2,000 | | 5,000 | | 10,000 | | 25,000 | |
| COD initial | 180 | 125 | | 115 | | | | 57.3 | | 49.2 | |
| COD final | | 0 | 100 | 0 | 100 | | | 0 | 100 | 0 | 100 |
| pH initial | 8.1 | 8.2 | | 7.8 | | 7.5 | | 4.9 | | 4.9 | |
| pH final | | 8.6 | | 8.4 | | 8.1 | | 7.1 | | 6.7 | |
| TDS initial | 1,100 | 912 | | 864 | | 576 | | 146 | | 64 | |
| TDS final | | 898 | 1.5 | 862 | 0.23 | 508 | 12 | 164 | -[b] | 297 | -[b] |
| Calcium initial | 18.0 | 15.0 | | 8.7 | | 1.8 | | 0.6 | | 0.6 | |
| Calcium final | | 11.4 | 24 | 5.1 | 41 | 1.0 | 44 | 0.6 | 0 | 0.8 | -[b] |
| Magnesium initial | 16.8 | 9.0 | | 4.5 | | 0.7 | | 0.1 | | 0 | |
| Magnesium final | | 8.4 | 6.7 | 3.1 | 31 | 0.4 | 43 | 0.3 | -[b] | 0.34 | -[b] |
| Potassium initial | 104 | 96 | | 84 | | 42 | | 0.4 | | 0 | |
| Potassium | | 104 | -[b] | 86 | -[b] | 46 | -[b] | 8.0 | -[b] | 6.7 | -[b] |
| Sodium | 170 | 165 | | 155 | | 105 | | 3.3 | | 1.1 | |
| Sodium | | 195 | -[b] | 185 | -[b] | 120 | -[b] | 31 | -[b] | 30 | -[b] |
| Sulfate initial | 0 | | | | | | | | | | |
| Sulfate | | 76 | | 80 | | 80 | | 72 | | 80 | |

Note: Blanks indicate parameter not determined.

[a]Except for pH in pH units.

[b]Negative percent removal.

TABLE C-24. REVERSE OSMOSIS TREATMENT OF RAW LEACHATE [4]

| Parameter | Chian and DeWalle | | | | | | | | | | | |
|---|---|---|---|---|---|---|---|---|---|---|---|---|
| | Concentration, mg/L[a] | | Percent removal | Effluent concentration, mg/L[a] | Percent removal | Effluent concentration, mg/L[a] | Percent removal | Effluent concentration, mg/L[a] | Percent removal | Concentration,[c] mg/L[a] | | Percent removal |
| | Influent | Effluent | | | | | | | | Influent | Effluent | |
| COD | | | | | | | | | | 536 | 27 | 95 |
| pH | | 5.5 | | 8.0 | | 5.5 | | 8.0 | | | | |
| TOC | 12,900 | 3,880 | 70 | 1,040 | 92 | 3,240 | 75 | 906 | 93 | | | |
| TDS | | | 97 | | 98 | | 98 | | 99 | | | |
| Membrane type | | Cellulose acetate | | Cellulose acetate | | Cellulose acetate | | Cellulose acetate | | | Cellulose acetate | |
| Pressure | | 600 | | 600 | | 1,500 | | 1,500 | | | | |
| Flux | | 5.5 | | 6.1 | | 8.9 | | 10 | | | | |
| Permeate yield | | 50 | | 50 | | 50 | | 50 | | | 50 | |

| Parameter | Chian and DeWalle | | | | | | | | | | | |
|---|---|---|---|---|---|---|---|---|---|---|---|---|
| | Concentration, mg/L[a] | | Percent removal | Effluent concentration, mg/L[a] | Percent removal | Effluent concentration, mg/L[a] | Percent removal | Effluent concentration, mg/L[a] | Percent removal | Concentration,[b] mg/L[a] | | Percent removal |
| | Influent | Effluent | | | | | | | | Influent | Effluent | |
| COD | 53,300 | 23,500 | 56 | 5,870 | 89 | | | | | 900 | 18 | 98 |
| pH | | 5.5 | | 8.0 | | 5.5 | | 8.0 | | | | |
| TOC | 18,500 | 8,120 | 56 | 2,030 | 89 | 7,570 | 59 | 7,330 | 60 | | | |
| TDS | | | 35 | | 99 | | 87 | | 99 | | | |
| Membrane type | | Cellulose acetate | | | | Cellulose acetate | | Cellulose acetate | | | DuPont B-9 | |
| Pressure | | 600 | | 600 | | 1,500 | | 1,500 | | | | |
| Flux | | 3.7 | | 3.9 | | 6.2 | | 7.1 | | | | |
| Permeate yield | | 50 | | 50 | | 50 | | 50 | | | 77 | |

| Parameter | Chian and DeWalle | | | | | | | | |
|---|---|---|---|---|---|---|---|---|---|
| | Concentration, mg/L[a] | | Percent removal | Effluent concentration, mg/L[a] | Percent removal | Effluent concentration, mg/L[a] | Percent removal | Effluent concentration, mg/L[a] | Percent removal |
| | Influent | Effluent | | | | | | | |
| COD | | | | | | | | | |
| pH | | 5.5 | | 8.0 | | 5.5 | | 8.0 | |
| TOC | 12,900 | 1,940 | 85 | 906 | 93 | 1,550 | 88 | 777 | 94 |
| TDS | | | 98 | | 99 | | 99 | | 99 |
| Membrane type | | NS-100 | | NS-100 | | NS-100 | | NS-100 | |
| Pressure | | 600 | | 600 | | 1,500 | | 1,500 | |
| Flux | | 7 | | 7.3 | | 11 | | 12.5 | |
| Permeate yield | | 50 | | 50 | | 50 | | 50 | |

(continued)

TABLE C-24 (continued)

| Parameter | Chian and DeWalle | | | | | | | | |
|---|---|---|---|---|---|---|---|---|---|
| | Concentration,[d] mg/L[a] | | Percent removal | Concentration,[e] mg/L[a] | | Percent removal | Concentration,[e] mg/L[a] | | Percent removal |
| | Influent | Effluent | | Influent | Effluent | | Influent | Effluent | |
| COD | | | | | | | | | |
| pH | 8.8 | | | 5.5 | | | 8.8 | | |
| TOC | 48.2 | 6.5 | 87 | 133 | 4.7 | 96 | 119 | 7.3 | 94 |
| TDS | 6,200 | 270 | 96 | 6,200 | 267 | 96 | 6,260 | 294 | 95 |
| Membrane type | NS-100 | | | NS-100 | | | NS-100 | | |
| Pressure | 600 | | | 600 | | | 600 | | |
| Flux | 12.5 | | | 12.0 | | | | | |
| Permeate yield | 50 | | | 48 | | | | | |

| Parameter | Chian and DeWalle | | | | | | | |
|---|---|---|---|---|---|---|---|---|
| | Concentration,[e] mg/L[a] | | Percent removal | Concentration,[c] mg/L[a] | | Percent removal | Effluent concentration, mg/L[a] | Percent removal |
| | Influent | Effluent | | Influent | Effluent | | | |
| COD | | | | | | | | |
| pH | 8.8 | | | 8.8 | | | | |
| TOC | 143 | 8.2 | 94 | 214 | 10.7 | 95 | 16.6 | 92 |
| TDS | 6,250 | 310 | 95 | 6,200 | 390 | 94 | 550 | 91 |
| Membrane type | NS-100 | | | NS-100 | | | | |
| Pressure | 600 | | | 600 | | | | |
| Flux | | | | | | | | |
| Permeate yield | | | | | | | | |

Note: Blanks indicate parameter not determined.

[a]Except for pH in pH units, membrane type, pressure in psig, flux in gal/day/ft$^2$, and permeate yield in percent.

[b]Reverse osmosis of anaerobic filter effluent.

[c]Reverse osmosis of aerated lagoon effluent.

[d]Reverse osmosis of activated carbon effluent.

[e]Reverse osmosis of ion exchange effluent.

REFERENCES


1. Cook, E.N., and E.G. Foree. Aerobic Biostabilization of Sanitary Landfill Leachate. Journal of the Water Pollution Control Federation, 46(2):380-382, 1974.

2. Chian, E.S.K., and F.B. DeWalle. Evaluation of Leachate Treatment, Volume I, Characterization of Leachate. EPA-600/2-77-186a, U.S. Environmental Protection Agency, Cincinnati, Ohio. 1977. 210 pp.

3. HO, S., Boyle, W.D., and R.K. Ham. Chemical Treatment of Leachates From Sanitary Landfills. Journal of the Water Pollution Control Federation, 46(7):1776-1791, 1974.

4. Chian, E.S.K., and F.B. DeWalle. Evaluation of Leachate Treatment, Volume II, Biological and Physical-chemical Processes. EPA-600/2-77-186b, U.S. Environmental Protection Agency, Cincinnati, Ohio. 1977. 245 pp.

5. Bjorkmar, V.B., and D.S. Mavinic. Physiochemical Treatment of a High Strength Leachate. In: Proceedings of the 32nd Annual Purdue Industrial Waste Conference, West Lafayette, Indiana, 1977.

6. Van Fleet, S.R., Judkins, J.F., and F.J. Molz. Discussion, Aerobic Biostabilization of Sanitary Landfill Leachate. Journal of the Water Pollution Control Federation, 46(11):2611-2612, 1974.

7. Pohland, F.G., and S.J. Kang. Sanitary Landfill Stabilization with Leachate Recycle and Residual Treatment. AIChE Symposium Series, Water-1974, II. Municipal Wastewater Treatment, 71(45):308-318, 1975.

# APPENDIX D

## UNIT PROCESS SUMMARIES - INDUSTRIAL WASTEWATER TREATMENT

Appendix D contains summaries of the treatment of industrial wastewaters by the following processes:

- biological treatment - activated sludge, aerated lagoon, trickling filter, facultative lagoon, anaerobic lagoon
- activated carbon adsorption - granular and powdered
- chemical oxidation
- chemical precipitation
- ion exchange
- reverse osmosis

Several oxidizing agents and coagulants are reported. These results should not be related directly to hazardous waste leachate treatment. However, they do provide an indication of treatment effectiveness and represent another reference point which can be used in treatment process formulation.

Tables D-1 through D-19 were prepared by Monsanto Research Corporation for this manual using Volume III of the Treatability Manual (1).

TABLE D-1. INDUSTRIAL CONTROL TECHNOLOGY SUMMARY FOR ACTIVATED SLUDGE [1]

| Pollutant | Number of data points | Effluent concentration | | Removal efficiency, % | |
|---|---|---|---|---|---|
| | | Maximum | Median | Maximum | Median |
| Conventional pollutants, mg/L: | | | | | |
| $BOD_5$ | 92 | 4,640 | 49 | >99 | 91 |
| COD | 84 | 7,420 | 425 | 96 | 67 |
| TOC | 14 | 1,700 | 280 | 95 | 69 |
| TSS | 74 | 4,050 | 283 | 96 | 25 |
| Oil and grease | 7 | 303 | 25 | >98 | 92 |
| Total phenol | 31 | 500 | 0.028 | >99 | 64 |
| TKN | 6 | 322 | 174 | 63 | 44 |
| Total phosphorus | 27 | 46.8 | 3.46 | 97 | 27 |
| Toxic pollutants, µg/L: | | | | | |
| Antimony | 18 | 670 | 3.5 | 90 | 15 |
| Arsenic | 8 | 160 | 13 | 96 | 39 |
| Cadmium | 17 | 13 | 4 | >99 | 0 |
| Chromium | 34 | 20,000 | 28 | 99 | 48 |
| Copper | 37 | 170 | 30 | >99 | 56 |
| Cyanide | 24 | 38,000 | 28 | >90 | 0[a] |
| Lead | 26 | 160 | 61 | 99 | 50 |
| Mercury | 9 | 1.6 | 0.7 | >97 | >29 |
| Nickel | 32 | 400 | 40 | 92 | 7 |
| Selenium | 1 | | | | |
| Silver | 17 | 95 | 33 | >96 | 20 |
| Thallium | 1 | | | | |
| Zinc | 36 | 150,000 | 180 | 92 | 27 |
| Bis(chloromethyl) ether | 1 | | | | |
| Bis(2-chloroethyl) ether | 1 | | | | |
| 4-Bromophenyl phenyl ether | 1 | | | | |
| Bis(2-ethylhexyl) phthalate | 38 | 1,300 | 13 | | |
| Butyl benzyl phthalate | 1 | | | | |
| Di-n-butyl phthalate | 9 | 58 | 3.6 | >99 | >84 |
| Diethyl phthalate | 17 | 69 | <0.03 | >99 | >99 |
| Dimethyl phthalate | 9 | 200 | <0.03 | >99 | >99 |
| Di-n-octyl phthalate | 1 | | | | |
| Benzidine | 1 | | | | |
| 1,2-Diphenylhydrazine | 1 | | | | |
| N-nitrosodiphenylamine | 2 | 1.6 | | >99 | |
| N-nitroso-di-n-propylamine | 2 | 19 | | | |
| 2-Chlorophenol | 2 | 10 | | 92 | |
| 2,4-Dichlorophenol | 2 | <10 | | >50 | |
| 2,4-Dimethylphenol | 3 | <10 | 9 | >95 | 0[a] |
| 2-Nitrophenol | 1 | | | | |
| 4-Nitrophenol | 1 | | | | |
| Pentachlorophenol | 15 | 3,100 | <0.4 | >99 | >98 |

(continued)

TABLE D-1 (continued)

| Pollutant | Number of data points | Effluent concentration Maximum | Effluent concentration Median | Removal efficiency, % Maximum | Removal efficiency, % Median |
|---|---|---|---|---|---|
| Toxic pollutants, µg/L (continued): | | | | | |
| Phenol | 30 | 440 | <0.07 | >99 | 99 |
| 2,4,6-Trichlorophenol | 10 | 4,300 | 41 | 98 | 0 |
| p-Chloro-m-cresol | 4 | <10 | 0.85 | >98 | >49 |
| Benzene | 9 | 37,000 | <0.2 | >99 | >96 |
| Chlorobenzene | 6 | 26 | <0.2 | >99 | >99 |
| 1,2-Dichlorobenzene | 12 | 69 | <0.05 | >99 | >99 |
| 1,4-Dichlorobenzene | 8 | 21 | 0.13 | >99 | 95 |
| 2,6-Dinitrotoluene | 1 | | | | |
| Ethylbenzene | 24 | 3,000 | <0.2 | >99 | >95 |
| Hexachlorobenzene | 4 | 0.8 | 0.28 | >97 | >49 |
| Toluene | 31 | 1,400 | 24 | >99 | 18 |
| 1,2,4-Trichlorobenzene | 11 | 920 | <6.3 | >99 | >99 |
| Acenaphthene | 10 | <10 | <1.0 | >99 | >99 |
| Anthracene/Phenanthrene | 7 | <10 | 1.4 | >98 | 83 |
| Fluoranthene | 1 | - | | | |
| Fluorene | 2 | <0.02 | | | |
| Indeno(1,2,3-cd)pyrene | 1 | | | | |
| Naphthalene | 26 | 260 | <2.3 | >99 | >99 |
| Pyrene | 5 | 9 | 0.2 | 78 | 0[a] |
| 2-Chloronaphthalene | 1 | | | | |
| Bromoform | 1 | | | | |
| Carbon tetrachloride | 2 | <10 | | >99 | |
| Chloroform | 16 | 58 | 32 | >99 | >2 |
| Dichlorobromomethane | 2 | <10 | | >0 | |
| 1,1-Dichloroethane | 2 | <10 | | >18 | |
| 1,2-Dichloropropane | 2 | <10 | | >82 | |
| 1,3-Dichloropropane | 1 | | | | |
| Methylene chloride | 5 | 250 | 9 | 99 | 0[a] |
| 1,1,2,2-Tetrachloroethane | 2 | | | >44 | |
| Tetrachloroethylene | 11 | 40 | 17 | >99 | 0[a] |
| 1,1,1-Trichloroethane | 6 | 3.3 | <2.0 | >99 | >85 |
| 1,1,2-Trichloroethane | 1 | | | | |
| Trichloroethylene | 12 | 84 | <0.5 | >99 | >98 |
| Trichlorofluoromethane | 5 | 2,100 | 2,100 | 96 | 0[a] |
| Heptachlor | 1 | | | | |
| Isophorone | 2 | <10 | | >0 | |

Note: Blanks indicate data not applicable.

[a]Actual data indicate negative removal.

TABLE D-2 INDUSTRIAL CONTROL TECHNOLOGY SUMMARY FOR AERATED LAGOONS [1]

| Pollutant | Number of data points | Effluent concentration | | Removal efficiency, % | |
|---|---|---|---|---|---|
| | | Maximum | Median | Maximum | Median |
| Conventional pollutants, mg/L: | | | | | |
| $BOD_5$ | 16 | 869 | 90 | >99 | 77.5 |
| COD | 10 | 1,610 | 591 | >99 | 63 |
| TOC | 4 | 573 | 126 | 99 | 46 |
| TSS | 13 | 3 | 155 | 99 | 24 |
| Oil and grease | 1 | | | | |
| TKN | 2 | 105 | | 79 | |
| Total phenol | 2 | 0.018 | | >99 | |
| Toxic pollutants, µg/L: | | | | | |
| Antimony | 1 | | | | |
| Beryllium | 1 | | | | |
| Cadmium | 1 | | | | |
| Chromium | 3 | 1,100 | 16 | 99 | 91 |
| Copper | 5 | 110 | 26 | 94 | 36 |
| Cyanide | 2 | 150 | | 91 | |
| Lead | 2 | 80 | | 93 | |
| Mercury | 1 | | | | |
| Nickel | 3 | 40 | 32 | 50 | 0 |
| Selenium | 1 | | | | |
| Thallium | 2 | <20 | | >80 | |
| Zinc | 4 | 510 | <80 | >99 | 61 |
| Bis(2-chloroethoxy)methane | 1 | | | | |
| Bis(2-chloroisopropyl) ether | 1 | | | | |
| Bis(2-ethylhexyl) phthalate | 5 | 28 | <10[a] | 96 | >78 |
| Butyl benzyl phthalate | 1 | | | | |
| Di-n-butyl phthalate | 1 | | | | |
| Diethyl phthalate | 1 | | | | |
| Dimethyl phthalate | 1 | | | | |
| Benzidine | 1 | | | | |
| 1,2-Diphenylhydrazine | 1 | | | | |
| N-nitrosodiphenylamine | 1 | | | | |
| 4-Nitrophenol | 1 | | | | |
| Pentachlorophenol | 1 | | | | |
| Phenol | 3 | 24 | <10[b] | >99 | 25 |
| 2,4,6-Trichlorophenol | 1 | | | | |
| Benzene | 2 | <10 | <20 | >95 | |
| 1,2-Dichlorobenzene | 1 | | | | |
| 1,4-Dichlorobenzene | 1 | | | | |
| 2,4-Dinitrotoluene | 1 | | | | |
| 2,6-Dinitrotoluene | 1 | | | | |
| Ethylbenzene | 2 | <10[a] | | >94 | |
| Hexachlorobenzene | 1 | | | | |
| Nitrobenzene | 1 | | | | |

(continued)

TABLE D-2 (continued)

| Pollutant | Number of data points | Effluent concentration | | Removal efficiency, % | |
|---|---|---|---|---|---|
| | | Maximum | Median | Maximum | Median |
| Toluene | 3 | <10[a] | <10[a] | >95 | >95 |
| Acenaphthene | 1 | | | | |
| Acenaphthylene | 1 | | | | |
| Benzo(a)pyrene | 1 | | | | |
| Benzo(b)fluoranthene | 1 | | | | |
| Fluoranthene | 1 | | | | |
| Fluorene | 1 | | | | |
| Anthracene/phenanthrene | 1 | | | | |
| Naphthalene | 2 | <10[b] | | >58 | |
| Pyrene | 1 | | | | |
| 2-Chloronaphthalene | 1 | | | | |
| Chloroform | 3 | 1,000 | <10[a] | >57 | >50 |
| Methyl chloride | 1 | | | | |
| Methylene chloride | 3 | 1,000 | 130 | 97 | 97 |
| Tetrachloroethylene | 1 | | | | |
| 1,1,1-Trichloroethane | 1 | | | | |
| Isophorone | 1 | | | | |

Note: Blanks indicate data not applicable.

[a]Not detected, assumed to be <10 μg/L.

[b]Below detection limit, assumed to be <10 μg/L.

TABLE D-3. INDUSTRIAL CONTROL TECHNOLOGY SUMMARY FOR ANAEROBIC LAGOONS [1]

| Pollutant | Number of data points | Effluent concentration | | Removal efficiency, % | |
|---|---|---|---|---|---|
| | | Maximum | Median | Maximum | Median |
| Conventional pollutants, mg/L: | | | | | |
| $BOD_5$ | 5 | 2,750 | 488 | 90 | 65 |
| COD | 4 | 5,910 | 2,300 | 47 | 34.5 |
| Toxic pollutants, μg/L: | | | | | |
| Benzene | 1 | | | | |
| Other pollutants, μg/L: | | | | | |
| Acetaldehyde | 3 | 40 | 35 | 67 | 56 |
| Acetic acid | 3 | 2,600 | 2,300 | 0[a] | 0[a] |
| Butyric acid | 2 | 330 | | 0[a] | |
| Propionic acid | 2 | 500 | | 0[a] | |

Note: Blanks indicate data not applicable.

[a]Actual data indicate negative removal.

TABLE D-4. INDUSTRIAL CONTROL TECHNOLOGY SUMMARY FOR TERTIARY POLISHING LAGOONS [1]

| Pollutant | Number of data points | Effluent concentration | | Removal efficiency, % | |
|---|---|---|---|---|---|
| | | Maximum | Median | Maximum | Median |
| Conventional pollutants, mg/L: | | | | | |
| COD | 2 | 263 | | 52 | |
| TSS | 2 | 28 | | 76 | |
| Total phenol | 2 | 0.051 | | 46 | |
| Toxic pollutants, µg/L: | | | | | |
| Chromium | 1 | | | | |
| Copper | 1 | | | | |
| Lead | 1 | | | | |
| Selenium | 1 | | | | |
| Zinc | 2 | 120 | | 86 | |
| Bis(2-ethylhexyl) phthalate | 2 | 11 | | 72 | |
| Naphthalene | 1 | | | | |
| Trichlorofluoromethane | 1 | | | | |

Note: Blanks indicate data not applicable.

TABLE D-5. INDUSTRIAL CONTROL TECHNOLOGY SUMMARY FOR FACULTATIVE LAGOONS [1]

| Pollutant | Number of data points | Effluent concentration | | Removal efficiency, % | |
|---|---|---|---|---|---|
| | | Maximum | Median | Maximum | Median |
| Conventional pollutants, mg/L: | | | | | |
| $BOD_5$ | 3 | 274 | 152 | 92 | 87 |
| COD | 2 | 2,110 | | 68 | |
| TSS | 2 | 105 | | 86 | |
| TKN | 2 | 100 | | 67 | |

Note: Blanks indicate data not applicable.
removal is also significant. No full-scale operations for leachate treatment are currently in place.

TABLE D-6. INDUSTRIAL CONTROL TECHNOLOGY SUMMARY FOR TRICKLING FILTER [1]

| Pollutant | Number of data points | Effluent concentration | | Removal efficiency, % | |
|---|---|---|---|---|---|
| | | Maximum | Median | Maximum | Median |
| Conventional pollutants, mg/L: | | | | | |
| $BOD_5$ | 11 | 137 | 27 | 98 | 92 |
| COD | 3 | 709 | 623 | 77 | 23 |
| TSS | 1 | | | | |
| Total phenol | 2 | 1.0 | | >97 | |
| Toxic pollutants, µg/L: | | | | | |
| Chromium | 1 | | | | |
| Copper | 1 | | | | |
| Cyanide | 1 | | | | |
| Lead | 1 | | | | |
| Bis(2-ethylhexyl) phthalate | 1 | | | | |
| Di-n-butyl phthalate | 1 | | | | |
| Diethyl phthalate | 1 | | | | |
| Pentachlorophenol | 1 | | | | |
| Phenol | 1 | | | | |
| 2,4,6-Trichlorophenol | 1 | | | | |
| Naphthalene | 1 | | | | |
| Chloroform | 1 | | | | |
| Methylene chloride | 1 | | | | |
| Trichloroethylene | 1 | | | | |
| Other pollutants, µg/L: | | | | | |
| Xylenes | 1 | | | | |

Note: Blanks indicate data not applicable.

TABLE D-7. INDUSTRIAL CONTROL TECHNOLOGY SUMMARY FOR GRANULAR ACTIVATED CARBON ADSORPTION [1]

| Pollutant | Number of data points | Effluent concentration | | Removal efficiency, % | |
|---|---|---|---|---|---|
| | | Maximum | Median | Maximum | Median |
| Conventional pollutants, mg/L: | | | | | |
| $BOD_5$ | 20 | 37,400 | 12 | 95 | 52 |
| COD | 40 | 109,000 | 199 | 99 | 55 |
| TOC | 45 | 66,700 | 83 | 99 | 60 |
| TSS | 28 | 2,600 | 16 | 99 | 23 |
| Oil and grease | 10 | 14 | 7.8 | 92 | 19 |
| Total phenol | 19 | 4.26 | 0.017 | 99 | 69 |
| TKN | 1 | | | | |
| Total phosphorus | 5 | 14 | 2.0 | 57 | 0 |
| Toxic pollutants, µg/L: | | | | | |
| Antimony | 8 | 590 | 42 | 33 | 10 |
| Arsenic | 7 | 42 | 5 | >99 | 0 |
| Beryllium | 3 | 5.4 | 2.7 | 0 | 0 |
| Cadmium | 5 | 22 | 9.8 | 95 | 76 |
| Chromium | 11 | 260 | 36 | 95 | >50 |
| Copper | 12 | 360 | 42 | >85 | 54 |
| Cyanide | 8 | 52 | <18 | >90 | >63 |
| Lead | 7 | 79 | 35 | >72 | 2 |
| Mercury | 2 | 0.4 | | 0 | |
| Nickel | 6 | 330 | 86 | 68 | 5 |
| Selenium | 4 | 50 | 13 | >50 | 9 |
| Silver | 6 | 91 | 22 | 36 | 12 |
| Zinc | 18 | 6,000 | 51 | >99 | 52 |
| Bis(2-ethylhexyl) phthalate | 9 | 410 | 17 | 66 | 0 |
| Butyl benzyl phthalate | 3 | 17 | <0.03 | >99 | >97 |
| Di-n-butyl phthalate | 7 | 5 | 0.4 | >99 | 76 |
| Diethyl phthalate | 3 | 3 | 1.4 | 0[a] | 0[a] |
| Di-n-octyl phthalate | 5 | 340 | 55 | 96 | 91 |
| N-nitrosodiphenylamine | 1 | | | | |
| 2,4-Dimethylphenol | 1 | | | | |
| Pentachlorophenol | 4 | 49 | 1.7 | >97 | 78 |
| Phenol | 5 | 1.5 | 0.9 | >96 | 50 |
| p-Chloro-m-cresol | 1 | | | | |
| Benzene | 3 | 210 | 9.8 | >80 | 64 |
| Chlorobenzene | 1 | | | | |
| 1,2-Dichlorobenzene | 2 | <0.05 | | >99 | |
| Ethylbenzene | 1 | | | | |
| Toluene | 8 | 630 | 1.3 | >99 | 24 |
| 1,2,4-Trichlorobenzene | 1 | | | | |
| Acenaphthene | 1 | | | | |
| Anthracene | 5 | 0.4 | 0.1 | >97 | 50 |

(continued)

TABLE D-7 (continued)

| Pollutant | Number of data points | Effluent concentration Maximum | Effluent concentration Median | Removal efficiency, % Maximum | Removal efficiency, % Median |
|---|---|---|---|---|---|
| Toxic pollutants, μg/L: (cont.) | | | | | |
| Benzo(a)pyrene | 2 | <0.02 | | >97 | |
| Benzo(k)fluoranthene | 1 | | | | |
| Fluoranthene | 2 | <0.02 | | >90 | |
| Pyrene | 2 | <0.01 | | >97 | |
| Chloroethane | 13 | 240,000 | 46,000 | >99 | 89 |
| Chloroform | 5 | 18 | <10 | >99 | 74 |
| 1,1-Dichloroethane | 9 | 45,000 | <10 | >99 | >99 |
| 1,2-Dichloroethane | 57 | 1,100,000 | 4,500 | >99 | 42 |
| 1,2-Trans-dichloroethylene | 39 | 30,000 | 240 | >99 | 85 |
| 1,2-Dichloropropane | 3 | <10 | <5.4 | >99 | 65 |
| Methylene chloride | 46 | 56,000 | 180 | 99 | 78 |
| 1,1,2,2-Tetrachloroethane | 25 | 64,000 | 4,000 | >99 | 85 |
| Tetrachloroethylene | 1 | | | | |
| 1,1,1-Trichloroethane | 2 | <10 | | >99 | |
| 1,1,2-Trichloroethane | 3 | <10 | <10 | >99 | >99 |
| Trichloroethylene | 2 | 5 | | 58 | |
| Trichlorofluoromethane | 1 | | | | |
| Vinyl chloride | 3 | 9,600 | 8,600 | 52 | 0[a] |
| α-BHC | 1 | | | | |

Note: Blanks indicate data not applicable.

[a]Actual data indicate negative removal.

TABLE D-8. INDUSTRIAL CONTROL TECHNOLOGY SUMMARY FOR POWDERED ACTIVATED CARBON ADSORPTION (WITH ACTIVATED SLUDGE) [1]

| Pollutant | Number of data points | Effluent concentration | | Removal efficiency, % | |
|---|---|---|---|---|---|
| | | Maximum | Median | Maximum | Median |
| Conventional pollutants, mg/L: | | | | | |
| $BOD_5$ | 24 | 54 | 13 | >99 | 96 |
| COD | 26 | 563 | 98 | 98 | 91 |
| TOC | 25 | 387 | 38 | 97 | 90 |
| TSS | 4 | 83 | 54 | 96 | 0[a] |
| Oil and grease | 4 | 57 | 13 | 96 | 54 |
| Total phenol | 4 | 0.058 | 0.013 | >99 | >99 |
| TKN | 1 | | | | |
| Toxic pollutants, µg/L: | | | | | |
| Antimony | 2 | 150 | | 5 | |
| Cadmium | 1 | | | | |
| Chromium | 4 | 90 | 53 | 97 | 88 |
| Chromium (+6) | 3 | 20 | <20 | >64 | >60 |
| Copper | 3 | 29 | 14 | 96 | 61 |
| Cyanide | 3 | 45 | 20 | 69 | >67 |
| Lead | 2 | 38 | | >78 | |
| Mercury | 1 | | | | |
| Nickel | 3 | 22 | <10 | >58 | >0 |
| Selenium | 2 | 40 | | 13 | |
| Zinc | 4 | 140 | 95 | 98 | 38 |
| Bis(2-chloroethyl) ether | 1 | | | | |
| Bis(2-ethylhexyl) phthalate | 1 | | | | |
| 2-Chlorophenol | 1 | | | | |
| Phenol | 2 | 190,000 | | >85 | |
| Benzene | 1 | | | | |
| Ethylbenzene | 1 | | | | |
| Toluene | 1 | | | | |
| Naphthalene | 1 | | | | |
| 1,2-Dichloroethane | 1 | | | | |
| 1,2-Dichloropropane | 1 | | | | |
| Acrolein | 1 | | | | |
| Isophorone | 1 | | | | |

Note: Blanks indicate data not applicable.

[a]Actual data indicate negative removal.

TABLE D-9. INDUSTRIAL CONTROL TECHNOLOGY SUMMARY FOR CHEMICAL OXIDATION (CHLORINATION) [1]

| Pollutant | Number of data points | Effluent concentration | | Removal efficiency, % | |
|---|---|---|---|---|---|
| | | Maximum | Median | Maximum | Median |
| Conventional pollutants, mg/L: | | | | | |
| COD | 7 | 978 | 565 | 39 | 28 |
| TSS | 2 | 159 | | 97 | |
| Toxic pollutants, µg/L: | | | | | |
| Copper | 1 | | | | |
| Cyanide | 17 | 130 | 30 | >99 | 84 |
| Lead | 1 | | | | |
| Other pollutants, mg/L: | | | | | |
| $NH_3$-N | 1 | | | | |

Note: Blanks indicate data not applicable.

TABLE D-10. INDUSTRIAL CONTROL TECHNOLOGY SUMMARY FOR OZONATION [1]

| Pollutant | Number of data points | Effluent concentration | | Removal efficiency, % | |
|---|---|---|---|---|---|
| | | Maximum | Median | Maximum | Median |
| Conventional pollutants, mg/L: | | | | | |
| $BOD_5$ | 4 | 5,190 | 330 | 10 | 0[a] |
| COD | 4 | 12,100 | 213 | 92 | 51 |
| TOC | 33 | 2,840 | 543 | >75 | 10 |
| TSS | 4 | 140 | 14 | 33 | 15 |
| Oil and grease | 1 | | | | |
| Total phenol | 3 | 0.13 | 0.021 | >99 | 24 |
| Total phosphorus | 1 | | | | |
| Toxic pollutants, µg/L: | | | | | |
| Antimony | 2 | 1,200 | | | |
| Arsenic | 2 | 43 | | 48 | |
| Cadmium | 1 | | | | |
| Chromium | 1 | | | | |
| Copper | 2 | 590 | | | |
| Cyanide | 50 | 12,000 | <320 | >99 | 99 |
| Lead | 1 | | | | |
| Nickel | 2 | 5,000 | | | |
| Silver | 2 | 1,300 | | | |
| Zinc | 3 | 460 | 240 | 0[a] | 96 |
| Bis(2-ethylhexyl) phthalate | 2 | 110 | | | |
| Butyl benzyl phthalate | 1 | | | | |
| Di-n-butyl phthalate | 2 | 2.7 | | 77 | |
| Toluene | 1 | | | | |
| Anthracene/phenanthrene | 2 | 0.4 | | >97 | |
| Benzo(a)pyrene | 1 | | | | |
| Benzo(k)fluoranthene | 1 | | | | |
| Fluoranthene | 1 | | | | |
| Pyrene | 1 | | | | |
| 1,2-Trans-dichloroethylene | 1 | | | | |
| Methylene chloride | 2 | 61 | | | |
| Trichloroethylene | 1 | | | | |

Note: Blanks indicate data not applicable.

[a]Actual data indicate negative removal.

TABLE D-11. INDUSTRIAL CONTROL TECHNOLOGY SUMMARY FOR SEDIMENTATION WITH CHEMICAL ADDITION (LIME) [1]

| Pollutant | Number of data points | Effluent concentration | | Removal efficiency, % | |
|---|---|---|---|---|---|
| | | Maximum | Median | Maximum | Median |
| Conventional pollutants, mg/L: | | | | | |
| COD | 4 | 37 | 23.8 | 50 | 14 |
| TOC | 3 | <20 | <12 | 37 | 18 |
| TSS | 9 | 150 | 12.5 | 96 | 71 |
| Oil and grease | 2 | 1.5 | | 66 | |
| Total phenol | 2 | 0.3 | | 33 | |
| Toxic pollutants, µg/L: | | | | | |
| Antimony | 7 | 180 | 4 | 83 | 40 |
| Arsenic | 11 | 110 | 3 | >99 | 63 |
| Asbestos, fibers/L | | | | | |
| Beryllium | 2 | 0.9 | | 76 | |
| Cadmium | 9 | 80 | 3.0 | 92 | >38 |
| Chromium | 10 | 1,800 | 40 | >99 | 88 |
| Chromium (dissolved) | 1 | | | | |
| Copper | 16 | 700 | 54 | 99 | 79 |
| Cyanide | 1 | | | | |
| Lead | 13 | 200 | 40 | 99 | 73 |
| Mercury | 9 | 8 | 0.7 | >96 | >60 |
| Nickel | 13 | 5,200 | 16 | >99 | 44 |
| Nickel (dissolved) | 1 | | | | |
| Selenium | 5 | 52 | 8 | 0 | 0 |
| Silver | 6 | <10 | 2.6 | >80 | 10 |
| Thallium | 3 | 8 | 1.1 | >80 | 58 |
| Zinc | 15 | 8,200 | 120 | >99 | 85 |
| Other pollutants, µg/L: | | | | | |
| Fluoride | 3 | 12,000 | 9,100 | 98 | 72 |
| Chloride | 1 | | | | |
| Aluminum | 2 | 500 | | 98 | |
| Iron | 2 | | | >99 | |
| Calcium | 1 | | | | |
| Manganese | 1 | | | | |
| Other pollutants, µg/L | | | | | |
| Fluoride | 1 | | | | |

Note: Blanks indicate data not applicable.

TABLE D-12. INDUSTRIAL CONTROL TECHNOLOGY SUMMARY FOR SEDIMENTATION WITH CHEMICAL ADDITION (LIME, POLYMER) [1]

| Pollutant | Number of data points | Effluent concentration | | Removal efficiency, % | |
|---|---|---|---|---|---|
| | | Maximum | Median | Maximum | Median |
| Conventional pollutants, mg/L: | | | | | |
| TSS | 7 | 43 | 17 | >99 | 69 |
| Oil and grease | 3 | 8.5 | 5.5 | 71 | 70 |
| Toxic pollutants, µg/L: | | | | | |
| Arsenic | 2 | <10 | | >0 | |
| Cadmium | 3 | 60 | <20 | 93 | 50 |
| Chromium | 3 | 360 | 75 | 90 | 89 |
| Chromium (dissolved) | 1 | | | | |
| Copper | 10 | 170 | 40 | >99 | 88 |
| Cyanide | 3 | 39 | 2.3 | 89 | 65 |
| Lead | 8 | 580 | 130 | 95 | 58 |
| Nickel | 3 | 330 | 270 | 96 | 76 |
| Nickel (dissolved) | 1 | | | | |
| Selenium | 1 | | | | |
| Silver | 1 | | | | |
| Zinc | 9 | 1,400 | 260 | >99 | 83 |
| Bis(2-ethylhexyl) phthalate | 2 | 150 | | 99 | |
| Butyl benzyl phthalate | 1 | | | | |
| Di-n-butyl phthalate | 1 | | | | |
| Diethyl phthalate | 1 | | | | |
| 2,4-Dimethylphenol | 1 | | | | |
| Phenol | 1 | | | | |
| p-Chloro-m-cresol | 1 | | | | |
| Anthracene | 1 | | | | |
| Benzo(a)pyrene | 1 | | | | |
| Chrysene | 1 | | | | |
| Fluoranthene | 1 | | | | |
| Fluorene | 1 | | | | |
| Naphthalene | 1 | | | | |
| Pyrene | 1 | | | | |
| Chloroform | 2 | 42 | | 9 | |
| Methylene chloride | 2 | 39 | | 0[a] | |
| 1,1,1-Trichloroethane | 1 | | | | |
| Other pollutants, µg/L | | | | | |
| Fluoride | 1 | | | | |

Note: Blanks indicate data not applicable.

[a]Actual data indicate negative removal.

TABLE D-13. INDUSTRIAL CONTROL TECHNOLOGY FOR SEDIMENTATION WITH CHEMICAL ADDITION (ALUM) [1]

| Pollutant | Number of data points | Effluent concentration | | Removal efficiency, % | |
|---|---|---|---|---|---|
| | | Maximum | Median | Maximum | Median |
| Conventional pollutants, mg/L: | | | | | |
| $BOD_5$ | 5 | 2,900 | 33 | 82 | 16 |
| COD | 5 | 7,600 | 416 | 71 | 61 |
| TOC | 4 | 1,500 | 105 | 80 | 63 |
| TSS | 5 | 122 | 50 | 99 | 79 |
| Oil and grease | 1 | | | | |
| Total phenol | 4 | 225 | 0.055 | 31 | 19 |
| Total phosphorus | 2 | 43 | | 15 | |
| Toxic pollutants, µg/L: | | | | | |
| Antimony | 2 | 120 | | 0[a] | |
| Arsenic | 2 | 62 | | <37 | |
| Beryllium | 1 | | | | |
| Cadmium | 2 | 29 | | >88 | |
| Chromium | 4 | 280 | <40 | >98 | 44 |
| Copper | 4 | <110 | 13 | >78 | >73 |
| Mercury | 2 | <150 | | 760 | |
| Nickel | 3 | 57 | | >56 | |
| Silver | 2 | 170 | | 10 | |
| Zinc | 4 | 9,000 | 2,900 | 85 | 30 |
| Bis(2-ethylhexyl) phthalate | 2 | 44 | | 0[a] | |
| Di-n-butyl phthalate | 2 | <10 | | >94 | |
| Phenol | 2 | <10 | | >90 | |
| 1,2-Dichlorobenzene | 2 | 13 | | >50 | |
| Ethylbenzene | 2 | 4,600 | | 0[a] | |
| Nitrobenzene | 1 | | | | |
| Toluene | 3 | 2,500 | 14 | 93 | 55 |
| 1,2,4-Trichlorobenzene | 1 | | | | |
| Anthracene/Phenanthrene | 1 | | | | |
| Chlorodibromomethane | 1 | | | | |
| Chloroform | 1 | | | | |
| 1,2-Dichloroethane | 1 | | | | |
| Methylene chloride | 2 | 70 | | >88 | |
| Tetrachloroethylene | 1 | | | | |
| Trichloroethylene | 1 | | | | |

Note: Blanks indicate data not applicable.

[a]Actual data indicate negative removal.

TABLE D-14. INDUSTRIAL CONTROL TECHNOLOGY SUMMARY FOR SEDIMENTATION WITH CHEMICAL ADDITION (ALUM, LIME) [1]

| Pollutant | Number of data points | Effluent concentration | | Removal efficiency, % | |
|---|---|---|---|---|---|
| | | Maximum | Median | Maximum | Median |
| Conventional pollutants, mg/L: | | | | | |
| $BOD_5$ | 1 | | | | |
| COD | 1 | | | | |
| TOC | 1 | | | | |
| TSS | 1 | | | | |
| Oil and grease | 1 | | | | |
| Total phenol | 1 | | | | |
| Toxic pollutants, µg/L: | | | | | |
| Arsenic | 1 | | | | |
| Chromium | 1 | | | | |
| Copper | 2 | 60 | | 88 | |
| Cyanide | 2 | 30 | | 80 | |
| Lead | 1 | | | | |
| Mercury | 1 | | | | |
| Nickel | 1 | | | | |
| Zinc | 1 | | | | |
| Bis(2-ethylhexyl) phthalate | 1 | | | | |
| Di-n-butyl phthalate | 1 | | | | |
| Phenol | 2 | 47 | | 96 | |
| Benzene | 1 | | | | |
| 1,2-Dichlorobenzene | 1 | | | | |
| Ethylbenzene | 2 | 22 | | 98 | |
| Toluene | 2 | 72 | | 96 | |
| 1,2,4-Trichlorobenzene | 1 | | | | |
| Naphthalene | 1 | | | | |
| Carbon tetrachloride | 1 | | | | |
| Chloroform | 1 | | | | |
| 1,2-Dichloropropane | 1 | | | | |
| Methylene chloride | 1 | | | | |
| 1,1,2,2-Tetrachloroethane | 1 | | | | |
| Tetrachloroethylene | 1 | | | | |
| 4,4'-DDT | 1 | | | | |
| Heptachlor | 1 | | | | |

Note: Blanks indicate data not applicable.

TABLE D-15. INDUSTRIAL CONTROL TECHNOLOGY SUMMARY FOR SEDIMENTATION WITH CHEMICAL ADDITION (ALUM, POLYMER) [1]

| Pollutant | Number of data points | Effluent concentration | | Removal efficiency, % | |
|---|---|---|---|---|---|
| | | Maximum | Median | Maximum | Median |
| Conventional pollutants, mg/L: | | | | | |
| $BOD_5$ | 5 | 3,800 | 2,800 | 65 | 25 |
| COD | 5 | 30,000 | 10,000 | 80 | 69 |
| TOC | 4 | 4,800 | 2,850 | 71 | 58 |
| TSS | 4 | 6,000 | 1,370 | 99 | 67 |
| Oil and grease | 4 | 880 | 80.5 | 99 | 80 |
| Total phenol | 5 | 0.15 | 0.10 | 60 | 26 |
| Total phosphorus | 1 | | | | |
| Toxic pollutants, µg/L: | | | | | |
| Cadmium | 2 | 30 | | 76 | |
| Chromium | 4 | 130 | 59 | 95 | 90 |
| Copper | 4 | 27,000 | 290 | 80 | 58 |
| Cyanide | 1 | | | | |
| Lead | 4 | 800 | 200 | >96 | 69 |
| Mercury | 3 | 14,000 | 1,500 | 88 | 74 |
| Nickel | 3 | 51,000 | 50 | >97 | 9 |
| Silver | 1 | | | | |
| Zinc | 4 | 1,000 | 700 | 83 | 70 |
| Di-n-butyl phthalate | 1 | | | | |
| Phenol | 1 | | | | |
| Benzene | 2 | 310 | | >97 | |
| Ethylbenzene | 3 | 460 | 390 | >94 | 75 |
| Toluene | 4 | 2,900 | 540 | 73 | 40 |
| Carbon tetrachloride | 1 | | | | |
| Chloroform | 4 | 550 | 160 | >94 | 40 |
| 1,1-Dichloroethylene | 1 | | | | |
| 1,2-Dichloroethane | 2 | 90 | | >60 | |
| 1,2-Trans-dichloroethylene | 1 | | | | |
| Methylene chloride | 4 | 13,000 | 7,600 | 98 | 91 |
| Tetrachloroethylene | 3 | 700 | 100 | >44 | 0 |
| 1,1,1-Trichloroethane | 2 | 120 | | 93 | |
| 1,1,2-Trichloroethane | 1 | | | | |
| Trichloroethylene | 1 | | | | |

Note: Blanks indicate data not applicable.

TABLE D-16. INDUSTRIAL CONTROL TECHNOLOGY SUMMARY FOR SEDIMENTATION WITH CHEMICAL ADDITION ($Fe^{2+}$, LIME) [1]

| Pollutant | Number of data points | Effluent concentration | | Removal efficiency, % | |
|---|---|---|---|---|---|
| | | Maximum | Median | Maximum | Median |
| Toxic pollutants, μg/L: | | | | | |
| Antimony | 4 | 30 | 9 | 30 | 0[a] |
| Arsenic | 4 | 3 | <2 | >86 | 67 |
| Beryllium | 2 | | | | |
| Cadmium | 4 | 3.2 | 1.1 | >50 | >24 |
| Chromium | 4 | 4 | 2.5 | >95 | 45 |
| Copper | 6 | 48 | 25 | 92 | 83 |
| Lead | 3 | <3 | <3 | >96 | >25 |
| Mercury | 2 | 0.2 | | >60 | |
| Nickel | 5 | 6 | 3 | >95 | 20 |
| Selenium | 2 | 32 | | 24 | |
| Silver | 6 | 10 | 3.1 | 93 | 4.5 |
| Thallium | 2 | 7.0 | | >88 | |
| Zinc | 6 | 36 | <23 | >97 | 92 |

Note: Blanks indicate data not applicable.

[a]Actual data indicate negative removal.

TABLE D-17. INDUSTRIAL CONTROL TECHNOLOGY SUMMARY FOR SEDIMENTATION WITH CHEMICAL ADDITION (POLYMER) [1]

| Pollutant | Number of data points | Effluent concentration | | Removal efficiency, % | |
|---|---|---|---|---|---|
| | | Maximum | Median | Maximum | Median |
| Conventional pollutants, mg/L: | | | | | |
| $BOD_5$ | 1 | | | | |
| COD | 1 | | | | |
| TOC | 1 | | | | |
| TSS | 1 | | | | |
| Oil and grease | 1 | | | | |
| Total phenol | 2 | 0.3 | | 58 | |
| Toxic pollutants, µg/L: | | | | | |
| Antimony | 1 | | | | |
| Cadmium | 1 | | | | |
| Chromium | 2 | 25 | | 97 | |
| Copper | 2 | 400 | | >89 | |
| Lead | 2 | 140 | | 97 | |
| Mercury | 2 | 140 | | 99 | |
| Nickel | 1 | | | | |
| Zinc | 2 | 6,000 | | 97 | |
| Bis(2-ethylhexyl) phthalate | 2 | 10 | | >97 | |
| Di-n-butyl phthalate | 2 | <10 | | >99 | |
| Diethyl phthalate | 1 | | | | |
| Phenol | 2 | 74 | | 29 | |
| Benzene | 1 | | | | |
| Ethylbenzene | 1 | | | | |
| Toluene | 2 | 1,900 | | 39 | |
| Anthracene | 1 | | | | |
| Chloroform | 1 | | | | |
| 1,2-Trans-dichloroethylene | 1 | | | | |
| Methylene chloride | 2 | 130 | | 0[a] | |
| Trichloroethylene | 2 | 14 | | 0[a] | |

Note: Blanks indicate data not applicable.

[a]Actual data indicate negative removal.

TABLE D-18. INDUSTRIAL CONTROL TECHNOLOGY SUMMARY FOR ION EXCHANGE

| Pollutant | Number of data points | Effluent concentration | | Removal efficiency, % | |
|---|---|---|---|---|---|
| | | Maximum | Median | Maximum | Median |
| Toxic pollutants, μg/L: | | | | | |
| Cadmium | 2 | <10[a] | | >99 | |
| Chromium | 2 | 60 | | >99 | |
| Chromium (+6) | 1 | | | | |
| Copper | 2 | 90 | | 98 | |
| Cyanide | 2 | 200 | | 99 | |
| Nickel | 2 | <10[a] | | >99 | |
| Silver | 2 | <10[a] | | >99 | |
| Zinc | 1 | | | | |
| Other pollutants, μg/L: | | | | | |
| Molybdenum | 1 | | | | |
| Radium (total) | 1 | | | | |
| Radium (dissolved) | 1 | | | | |

Note: Blanks indicate data not applicable.

[a]Not detected, assumed to be <10 μg/L.

TABLE D-19. INDUSTRIAL CONTROL TECHNOLOGY SUMMARY FOR REVERSE OSMOSIS [1]

| Pollutant | Number of data points | Effluent concentration | | Removal efficiency, % | |
|---|---|---|---|---|---|
| | | Maximum | Median | Maximum | Median |
| Conventional pollutants, mg/L: | | | | | |
| $BOD_5$ | 11 | 429 | 2.7 | 92 | 87 |
| COD | 18 | 736 | 25.5 | >99 | 91.5 |
| TOC | 18 | 50 | 8 | 96 | 90 |
| TSS | 2 | <5 | | >90 | |
| Oil and grease | 5 | 17 | 7 | >72 | >50 |
| Total phenol | 6 | 0.020 | 0.014 | 81 | 2.5 |
| TKN | 1 | | | | |
| Toxic pollutants, µg/L: | | | | | |
| Antimony | 11 | 200 | 90 | 60 | 30 |
| Arsenic | 10 | 49 | 1 | >99 | >92 |
| Beryllium | 2 | 5 | | >85 | |
| Cadmium | 11 | 48 | 14 | 50 | 0 |
| Chromium | 13 | 1,500 | 520 | >99 | 67 |
| Chromium (+3) | 1 | | | | |
| Chromium (+6) | 1 | | | | |
| Copper | 17 | 28,000 | 40 | >99 | 82 |
| Cyanide | 10 | 22,000 | 22 | 97 | >42 |
| Lead | 11 | 520 | 250 | >99 | >25 |
| Mercury | 3 | 0.53 | 0.3 | >60 | 4 |
| Nickel | 13 | 210 | <10 | >98 | 47 |
| Selenium | 4 | 13 | 4 | 85 | 77 |
| Silver | 13 | 78 | 9 | 76 | 17 |
| Thallium | 3 | 4 | 2 | 89 | 50 |
| Zinc | 30 | 8,600 | 57 | >99 | 97 |
| Bis(2-ethylhexyl) phthalate | 5 | 31 | 3 | 96 | 67 |
| Di-n-butyl phthalate | 3 | 1 | 1 | 83 | 75 |
| Dimethyl phthalate | 2 | 170 | | 41 | |
| Phenol | 4 | 10 | 0.7 | 80 | 25 |
| Benzene | 3 | 3.0 | 1 | 80 | 50 |
| Toluene | 6 | 29 | 20 | 12 | 0[a] |
| Acenaphthene | 3 | 3 | 0.8 | 99 | 73 |
| Anthracene | 1 | | | | |
| Pyrene | 1 | | | | |
| Chloroform | 4 | 31 | 13 | 79 | 0[a] |
| Methyl chloride | 1 | | | | |
| Methylene chloride | 4 | 5 | 5 | 64 | 10 |
| Trichloroethylene | 1 | | | | |

Note: Blanks indicate data not applicable.

[a]Actual data indicate negative removal.

REFERENCE

1. U.S. Environmental Protection Agency. Technologies For Control/removal of Pollutants, Treatability Manual, Vol.III. U.S. Environmental Protection Agency, Cincinnati, Ohio, 1980.

## APPENDIX E

## TREATABILITY OF LEACHATE CONSTITUENTS

A recent Environmental Protection Agency report (1) summarized data on the treatability of over 500 compounds, many of which are listed in Subtitle C, Section 3001 of RCRA. Although the focus of the report was on concentration technology and it thus does not fully address all potential leachate treatment options, much useful information is contained therein. Therefore, the summary treatability data contained in this report is reproduced in Appendix Table E-1. This information can be used to guide identification of potential hazardous waste leachate treatment technologies. However, because this information was derived from various types of studies, ranging from laboratory to full scale on wastewaters ranging from pure compound to industrial waste and leachate, the reader is cautioned not to directly apply these published data to a leachate treatment situation.

Primary organization of Appendix Table E-1 is by treatment process. For each process, the treatability of individual chemical compounds is given with the compounds arranged in alphabetical order within chemical classifications. The following treatment processes are included:

| Process | Process Code No. |
|---|---|
| Biological | I |
| Coagulation/Precipitation | II |
| Reverse Osmosis | III |
| Ultrafiltration | IV |
| Stripping | V |
| Solvent Extraction | VII |
| Carbon Adsorption | IX |
| Resin Adsorption | X |
| Miscellaneous Sorbents | XII |

The chemical classification system used is as follows:

| Chemical Classification | Classification Code No. |
|---|---|
| Alcohols | A |
| Aliphatics | B |
| Amines | C |
| Aromatics | D |
| Ethers | E |

| Chemical Classification | Classification Code No. |
|---|---|
| Halocarbons | F |
| Metals | G |
| PCBs | I |
| Pesticides | J |
| Phenols | K |
| Phthalates | L |
| Polynuclear Aromatics | M |

In order to facilitate use of Appendix Table E-1, an index has been prepared and is presented immediately before Table E-1. This index lists compounds contained in Table E-1 in alphabetical order and indicates for each compound it's pollutant group (RCRA, Section 311, or Priority Pollutant), chemical classification (alcohol, aliphatic, etc.), and the compound code number used in Appendix Table E-1. This latter number can be used to locate the compound in the main table. Note, some compounds inadvertently may have been assigned to more than one chemical classification in Table E-1. The index identifies these cases.

Many chemical compounds are known by several names. Attempts were made to use preferred or generic names according to The Merck Index. However, in some cases it was necessary to use the names which were used in the reference documents. Users of Table E-1 are advised to check for compounds under several potential alphabetic listings.

In order to present the large quantity of information in a concise manner, it was necessary to code some of the information in Table E-1. The coding system is explained in footnotes at the end of the Appendix.

(1) Shuckrow, A.J., Pajak, A.P., and J.W. Osheka. Concentration Technologies For Hazardous Aqueous Waste Treatment. EPA-600/2-81-019. U.S. Environmental Protection Agency, Cincinnati, Ohio, 1981. 343pp.

INDEX OF CHEMICALS LISTED IN APPENDIX TABLE E-1

| Compound | Pollutant Group* | Chemical Class.** | Compound Code No.*** |
|---|---|---|---|
| Acenaphthalene | | M | XM-1 |
| Acenaphthene | P | M | IIM-1 |
| Acenaphthylene | P | M | IIM-2 |
| Acetaldehyde | H,T,S | B | IB-1,2,3 |
| | | | IXB-1 |
| Acetanilide | | C | IC-1 |
| Acetic Acid | S | B | IIIB-1,2 |
| | | | IXB-2 |
| Acetone | T | B | IB-4,5,6 |
| | | | IIIB-3,4 |
| | | | IXB-3 |
| Acetone Cyanohydrin | S | B | IXB-4 |
| Acetonitrile | H,T | B | IB-7,8 |
| Acetophenone | T | D | IXD-1,2 |
| | | | XD-1 |
| Acetylglycine | | B | IB-9 |
| Acrolein | P,A,H,S | B | VIIB-1 |
| | | | IXB-5,6 |
| Acrylic Acid | T | B | IB-11,12,13 |
| | | | IXB-7 |
| Acrylonitrile | P,H,T,S | B | IB-14 to 17 |
| | | | VB-1 |
| | | | VIIB-2 |
| | | | IXB-8 |
| Adipic Acid | S | B | IB-18 |
| Alanine | | B | IB-19 |
| Aldrin | A,H,P,S | J | IJ-1 |
| | | | IIIJ-1 |
| | | | IXJ-1 to 5 |
| | | | XJ-1 |
| Allyl Alcohol | S,A,H | A | IXA-1 |
| Allylamine | | C | IXC-1 |
| p-Aminoacetanilide | | C | IC-2 |
| m-Aminobenzoic Acid | | C | IC-3 |
| o-Aminobenzoic Acid | | C | IC-4 |
| p-Aminobenzoic Acid | | C | IC-5 |
| m-Aminotoluene | | C | IC-6 |
| o-Aminotoluene | | C | IC-7 |
| p-Aminotoluene | | C | IC-8 |

(continued)

INDEX (continued)

| Compound | Pollutant Group* | Chemical Class.** | Compound Code No.*** |
|---|---|---|---|
| Aminotriazole | | J | IJ-2 |
| Ammonium Oxalate | | B | IB-20 |
| Amyl Acetate | S | B | IXB-9 |
| n-Amyl Alcohol(1-pentanol) | | A | IA-1, IXA-2 |
| sec-Amylbenzene | | D | ID-1 |
| tert-Amylbenzene | | D | ID-2 |
| Aniline | S,T | C | IC-9,10,11 |
| | | | IIIC-1,2 |
| | | | IXC-2,3 |
| | | | XC-1 |
| Anthracene | P | M | IM-1 |
| | | | VIIM-1 |
| Antimony | H,P | G | IIG-1 |
| Arochlor 1242 | H,P,S | I | IXI-4 to 7 |
| Arochlor 1254 | H,P,S | I | IXI-8 to 16 |
| | | | X I-1,2 |
| Arochlor 1254 and 1260 | H,P,S | I | X I-3 |
| | | | XII I-1 |
| Arsenic | H,P | G | IIG-2,3 |
| | | | IXG-1 |
| | | | XIIG-1 |
| Arsenic ($As^{+5}$) | H,P | G | IIG-4 |
| Atrazine | | J | IIIJ-2 |
| | | | XJ-2 |
| Barium | H | G | IG-1 |
| | | | IIG-5,6,7 |
| | | | IIIG-1 |
| | | | IXG-2 |
| Benzaldehyde | | D | ID-3,4,5 |
| | | | IXD-3,4,5 |
| | | | XD-2 |
| Benzamide | | C | IC-12 |
| Benzanthracene | H | M | IM-2 |
| | | | IIM-3 |
| Benzene | H,P,S,T | D | ID-6 to 10 |
| | | | VD-1,2 |
| | | | VIID-1 to 4 |
| | | | IXD-6 to 12 |
| Benzene Sulfonate | | D | ID-11 |
| Benzene, Toluene, Xylene(BTX) | | D | XD-5 |
| Benzenethiol | A,H | D | ID-12 |
| Benzidine | H,T | C | IXC-13 |
| | | | IC-13,14 |

(continued)

INDEX (continued)

| Compound | Pollutant Group* | Chemical Class.** | Compound Code No.*** |
|---|---|---|---|
| Benzil | | D | IXD-14 |
| | | | XD-3 |
| 11,12-Benzofluoranthene | H,P | M | IIM-4 |
| Benzoic Acid | S | D | ID-13,14 |
| | | | IXD-15,16 |
| | | | XD-4 |
| Benzonitrile | | D | ID-15 |
| Benzoperylene | | M | IM-3 |
| 1,12-Benzoperylene | P | M | IIM-5 |
| Benzo(a)pyrene | H,T | M | IIM-6 |
| 3,4-Benzpyrene | | D | ID-16 |
| Benzylamine | | C | IC-15 |
| Beryllium | H,P | G | IIG-8,9 |
| Biphenyl | | M | IXM-1 |
| | | | XM-2 |
| bis(Chloroethyl) Ether | H,T | E | VIIE-1 |
| | | | IXE-2 |
| bis(2-Chloroisopropyl) Ether | H,T,P | E | IIIE-1 |
| | | | IXE-1 |
| bis(Chloroisopropyl) Ether | | E | VIIE-2 |
| bis(2-Ethylhexyl) Phthalate | H,P,T | L | IL-1 |
| | | | IIL-1 |
| | | | VIIL-1 |
| | | | IXL-1,2 |
| Bismuth | | G | IIG-10 |
| Bisphenol A | | K | XK-1,2 |
| Borneol | | A | IA-2 |
| Brine Phenol | | K | XK-3,4 |
| Bromochloromethane | | F | IXF-1 |
| Bromodichloromethane | P | F | VF-1 |
| | | | VIIF-1 |
| | | | IXF-2 |
| | | | XF-3 |
| Bromoform | P | F | IF-1 |
| | | | IXF-3,4 |
| | | | XF-1,2 |
| Bromomethane | H,T | F | VF-2 |
| | | | VIIF-2 |
| | | | IXF-5 |
| Butanamide | | C | IC-16 |
| Butanedinitrile | | B | IB-21,22 |
| 1,4-Butanediol | | A | IA-11 |
| Butanenitrile | | B | IB-23,24 |

(continued)

INDEX (continued)

| Compound | Pollutant Group* | Chemical Class.** | Compound Code No.*** |
|---|---|---|---|
| Butanol | T | A | IA-3 to 7<br>IXA-3,4,5<br>XA-1 |
| sec-Butanol | | A | IA-8 |
| tert-Butanol | | A | IA-9,10<br>IXA-6 |
| Butyl Acetate | S | B | IXB-10 |
| Butyl Acrylate | | B | IXB-11 |
| Butylamine | S | C | IXC-4,5<br>XC-2 |
| sec-Butylbenzene | | D | ID-17 |
| tert-Butylbenzene | | D | ID-18 |
| Butylbenzl Phthalate | P,S | L | IL-2<br>VIIL-2 |
| Butylene Oxide | | B | IB-25 |
| Butyl Ether | | E | IXE-3 |
| Butyl Phenol | | K | IXK-1 |
| Butyraldehyde | | B | IXB-12 |
| Butyric Acid | S | B | IB-27,28,29<br>IXB-13,14<br>XB-1 |
| Cadmium | H,P | G | IG-2,3,4<br>IIG-11,12,13<br>IIIG-2<br>IXG-3,4<br>XIIG-2 |
| Calcium Gluconate | | B | IB-30 |
| Caproic Acid | | B | IXB-15,16<br>XB-2 |
| Caprolactum | | B | IB-31 |
| Captan | S | J | IIIJ-3 |
| Carbon Tetrachloride | S,T,P,H | F | IF-2<br>IIF-1<br>IXF-6,7,8<br>XF-4 |
| Chloral | T | F | VF-3 |
| Chloral Hydrate | | F | VIIF-3 |
| D-Chloramphenicol | | M | IM-4 |
| Chloranil | | D | ID-19 |
| Chlordane | P,H,T,S | J | IJ-3<br>IXJ-7,8 |
| Chlorinated Pesticides (Unspecified) | | J | XJ-3 |

(continued)

INDEX (continued)

| Compound | Pollutant Group* | Chemical Class.** | Compound Code No.*** |
|---|---|---|---|
| m-Chloroaniline | | C | IC-17 |
| o-Chloroaniline | A,H | C | IC-18 |
| p-Chloroaniline | A,H | C | IC-19 |
| Chlorobenzene | H,P,S,T | D | ID-20 |
| | | | IIID-1 |
| | | | VD-3,4 |
| | | | VIID-5 |
| | | | IXD-18,19,20 |
| Choroethane | H,P | F | VF-4 |
| | | | VIIF-4 |
| | | | IXF-9 |
| Chloroethylene | | F | VF-5 |
| | | | VIIF-5 |
| | | | IXF-10 |
| Chloroform | H,P,S,T | F | IF-3 |
| | | | VF-6 |
| | | | IXF-11,12 |
| | | | XF-5,6 |
| Chloromethane | H,T | F | VF-7 |
| | | | VIIF-6 |
| 4-Chloro-3-methylphenol | H | K | IK-1,2 |
| | | | VIIK-1 |
| | | | IXK-2 |
| | | | XK-5 |
| 2-Chloronaphthalene | H,T,P | M | IIM-7 |
| 1-Chloro-2-nitrobenzene | H | D | IXD-21 |
| 2-Chloro-4-nitrophenol | H | K | IK-3 |
| Chlorophenol | H | K | VK-2 |
| m-Chlorophenol | H | K | IK-5 |
| | | | XK-6 |
| o-Chlorophenol (2-chlorophenol) | H,P,T | K | IK-4,6,7 |
| | | | IIIK-1 |
| | | | VIIK-2 |
| p-Chlorophenol | H | K | IK-8,9 |
| Chromic Acid | H,S | G | IIIG-3 |
| Chromium | H,P | G | IG-5 |
| | | | IIG-14,15 |
| | | | IIIG-4,5 |
| | | | IXG-5,6 |
| | | | XIIG-3 |
| Chromium ($^{+3}$) | H,P | G | IG-6 |
| | | | IIG-16,17 |
| | | | IXG-7 |

(continued)

INDEX (continued)

| Compound | Pollutant Group* | Chemical Class.** | Compound Code No.*** |
|---|---|---|---|
| Chromium ($Cr^{+6}$) | H,P | G | IG-7 |
| | | | IIG-18,19 |
| | | | IXG-8 |
| Chrysene | H,T,P | M | IIM-8 |
| Citric Acid | | B | IB-32 |
| Cobalt | | G | IG-8 |
| | | | IIG-20 |
| Copper | P | G | IG-9 to 12 |
| | | | IIG-21 to 25 |
| | | | IIIG-6,7 |
| | | | IVG-1 |
| | | | IXG-9,10,11 |
| | | | XIIG-4,5 |
| Cresol | S,T | K | IXK-3 |
| m-Cresol | S,T | K | IK-10 |
| | | | VIIK-3 |
| o-Cresol | S,T | K | IK-11 |
| | | | VIIK-4,5,6 |
| p-Cresol | S,T | K | IK-12 |
| | | | VIIK-3 |
| Crotonaldehyde | H,T | B | IB-33,34,35 |
| | | | IXB-17 |
| Cumeme | T | D | IXD-22 |
| | | | XD-6 |
| | | M | IXM-2 |
| | | | XM-3 |
| Cyclohexanol | | A | IA-12 |
| | | | IXA-7 |
| | | | XA-2 |
| Cyclohexanolone | | B | IB-38 |
| Cyclohexanone | | B | IB-39 |
| | | | IXB-18 |
| Cyclohexylamine | | C | IXC-6 |
| | | | XC-3 |
| Cyclopentanone | | B | IB-40 |
| Cystine | | B | IB-36 |
| L-Cystine | | B | IB-37 |
| 2,4-D Butyl ester | | J | IXJ-6 |
| | | | XJ-4 |
| 2,4-D & related herbicides | S | J | XJ-5 |
| 2,4-D-Isoctyl ester | | J | IJ-4 |
| DDD | P,H,T | J | IXJ-9,10,11 |
| DDE | P,H | J | IIIJ-4 |
| | | | IXJ-12,13,14 |

(continued)

INDEX (continued)

| Compound | Pollutant Group* | Chemical Class.** | Compound Code No.*** |
|---|---|---|---|
| DDT | P,H,S,T | J | IJ-5 |
| | | | IIJ-1 |
| | | | IIIJ-5 |
| | | | IXJ-15 to 19 |
| | | | XJ-6 |
| DDVP | | J | IJ-6 |
| Decanoic Acid | | B | IXB-19 |
| | | | XB-3 |
| Decanol | | A | IXA-8 |
| | | | XA-3 |
| 2,4-Diaminophenol | | K | IK-13 |
| Diazinon | S | J | IJ-7,8 |
| | | | IIIJ-6 |
| 1,2,4,5-Dibenzpyrene | | D | ID-21 |
| Dibromochloromethane | P,T | F | VF-8 |
| | | | VIIF-7 |
| | | | IXF-13,14,15 |
| | | | XF-7 |
| 2,4-Dibromophenol | | K | XK-7 |
| Dibutylamine | | C | IXC-7 |
| | | | XC-4 |
| Di-N-Butylamine | | C | IXC-8 |
| Dibutylphthalate | H,P,T | L | IXL-3 |
| | | | XL-1 |
| Di-N-Butylphthalate | P | L | IL-3 |
| | | | IIL-2 |
| | | | VIIL-3 |
| m-Dichlorobenzene | H,P,S | D | ID-22,23 |
| | | | VD-5 |
| | | | VIID-6 |
| | | | IXD-25,26 |
| | | | XD-7 |
| o-Dichlorobenzene | H,S,T | D | ID-24 |
| | | | VD-5 |
| | | | VIID-6 |
| | | | IXD-23,24 |
| | | | XD-8 |
| p-Dichlorobenzene | H,S | D | ID-25 |
| | | | VD-6 |
| | | | VIID-6 |
| | | | IXD-28,29 |
| | | | XD-9 |
| 1,2-Dichlorobenzene | H,T,P | D | VD-7 |
| 1,3-Dichlorobenzene | H,T,P | D | VD-8 |

(continued)

INDEX (continued)

| Compound | Pollutant Group* | Chemical Class.** | Compound Code No.*** |
|---|---|---|---|
| 1,4-Dichlorobenzene | H,P,T | D | VD-9<br>IXD-27 |
| 3,3'-Dichlorobenzidine | P,H,T | D | IXD-30 |
| Dichlorodifluoromethane | P | F | VIIF-8 |
| Dichloroethane | H,T | F | IXF-16,17 |
| 1,1-Dichloroethane | H,P,T | F | VF-9<br>VIIF-9<br>IXF-18,19<br>XF-8 |
| 1,2-Dichloroethane[d] | H,P,S,T | F | IF-4<br>VF-10,11<br>VIIF-10<br>IXF-20,21<br>XF-9 |
| Dichloroethylene | H,P,S | F | VIIF-11,12 |
| 1,1-Dichloroethylene | H,P,S,T | F | VF-12,14<br>VIIF-13<br>IXF-22 |
| 1,2-Dichloroethylene | H,P | F | IXF-23<br>XF-10 |
| 1,2-trans-Dichloroethylene | H,T,P | F | VF-13<br>VIIF-14<br>IXF-24 |
| Dichlorofluoromethane | | F | IXF-25 |
| Dichloroisopropyl Ether | | E | IXE-4 |
| Dichloromethane | H,P,S,T | F | VF-15,16<br>VIIF-15<br>IXF-27 |
| Dichlorophenol | | K | XK-8 |
| 2,3-Dichlorophenol | | K | IXK-4<br>XK-9 |
| 2,4-Dichlorophenol | H,T,P | K | IK-14 to 18<br>VIIK-7,8<br>XK-10 |
| 2,5-Dichlorophenol | | K | IK-19 |
| 2,6-Dichlorophenol | | K | IK-20 |
| 2,4-Dichlorophenoxyacetic Acid | A,H,S | D | ID-26 |
| 2,6-Dichlorophenoxyacetic Acid | | D | ID-27 |
| 2,4-Dichlorophenoxyproprionic Acid | | D | ID-18 |
| 1,2-Dichloropropane | H,S,P | F | VF-17<br>VIIF-16<br>IXF-28 |

(continued)

INDEX (continued)

| Compound | Pollutant Group* | Chemical Class.** | Compound Code No.*** |
|---|---|---|---|
| 1,2-Dichloropropylene | | F | VF-18 |
| | | | VIIF-17 |
| | | | IXF-29 |
| Dicyclopentadiene | | B | IXB-20 |
| Dieldrin | A,H,P,S | J | IJ-9 |
| | | | IIJ-2 |
| | | | IIIJ-7 |
| | | | IXJ-20 to 26 |
| Diethanolamine | | C | IC-20 |
| | | | IXC-9 |
| Diethylene Glycol | | B | IB-41 |
| | | | IXB-21 |
| Diethylene Glycol Monobutyl Ether | | E | IXE-5 |
| Diethylene Glycol Monoethyl Ether | | E | IXE-6 |
| Diethylenetriamine | | C | IXC-10 |
| Diethyl Ether | | E | IIIE-2 |
| Diethylhexyl Phthalate | | L | XL-2 |
| Di(2-ethylhexyl) Phthalate | | L | IL-5 |
| Diethyl Phthalate | P,H,T | L | IL-4 |
| | | | VIIL-4 |
| α,α-Diethylstilbenediol | | M | IM-5 |
| Dihexylamine | | C | IXC-11, XC-5 |
| Diisobutyl Ketone | | B | IXB-22 |
| Diisopropanolamine | | C | IXC-12 |
| Diisopropyl Methylphosphonate | | B | IXB-23 |
| Dimethylamine | T | C | IXC-13 |
| | | | XC-6 |
| Dimethylaniline (Xylidene) | | D | IXD-31 |
| 2,3-Dimethylaniline | | C | IC-21 |
| 2,5-Dimethylaniline | | C | IC-22 |
| 3,4-Dimethylaniline | | C | IC-23 |
| 9,10-Dimethylanthracene | | M | IM-6 |
| 7,9-Dimethylbenzacridine | | D | ID-29 |
| 7,10-Dimethylbenzacridine | | D | ID-30 |
| 9,10-Dimethyl-1,2-benzanthracene | | M | IM-7 |
| Dimethylcyclohexanol | | A | IA-14 |
| Dimethylnapthalene | | M | IXM-3 |
| | | | XM-4 |
| Dimethylnitrosamine | H,T | C | IXC-14 |
| Dimethylphenol | S | K | IXK-5 |
| 2,3-Dimethylphenol | | K | IK-21 |
| 2,4-Dimethylphenol | H,T,P | K | IK-22 |
| | | | VIIK-8 |

(continued

INDEX (continued)

| Compound | Pollutant Group* | Chemical Class.** | Compound Code No.*** |
|---|---|---|---|
| 2,5-Dimethylphenol | | K | IK-23 |
| 2,6-Dimethylphenol | | K | IK-24 |
| 3,4-Dimethylphenol | | K | IK-25 |
| 3,5-Dimethylphenol | | K | IK-26 |
| | | | IK-6 |
| Dimethyl Phthalate | P,H,T | L | IL-6,7 |
| | | | IIL-3 |
| | | | VIIL-5 |
| | | | IXL-4 |
| | | | XL-3 |
| Dimethyl Sulfoxide | | B | IIIB-5 |
| Dinitrobenzene | H,S | D | IIID-2 |
| 3,5-Dinitrobenzoic Acid | | D | ID-31 |
| 4,6-Dinitro-2-Methylphenol | | K | VIIK-9 |
| 2,4-Dinitrophenol | H,P,S,T | K | IK-27,28 |
| | | | VIIK-10 |
| | | | IXK-7 |
| 2,4-Dinitrophenylhydrazine | | D | IIID-3 |
| 2,4-Dinitrotoluene | P,H,T,S | D | ID-32,33 |
| | | | VIID-7 |
| | | | IXD-32 |
| 2,6-Dinitrotoluene | P,H,T | D | VIID-8 |
| | | | IXD-33 |
| Di-N-Octyl Phthalate | P,H,T | L | IL-8 |
| | | | VIIL-6 |
| 1,1-Diphenylhydrazine | | M | IXM-4 |
| 1,2-Diphenylhydrazine | H,T,P | M | IM-8 |
| Di-N-Propylamine | T | C | IXC-15 |
| Dipropylene Glycol | | B | IXB-24 |
| 2,3-Dithiabutane | | B | IB-42 |
| Dodecane | | B | IXB-25 |
| | | | XB-4 |
| Dulcitol | | B | IB-43 |
| Endrin | A,P,S | J | IJ-10 |
| | | | IIJ-3 |
| | | | IXJ-27 to 31 |
| Endrin and Heptachlor | A,S | J | XJ-7 |
| Erucic Acid | | B | IB-44 |
| 1,2-Ethanediol[a] | | A | IA-15 |
| Ethanol | | A | IA-16,17,18 |
| | | | IIIA-1,2 |
| | | | VIIA-1 |
| | | | IXA-9 |

(continued)

INDEX (continued)

| Compound | Pollutant Group* | Chemical Class.** | Compound Code No.*** |
|---|---|---|---|
| Ethoxytriglycol | | E | IXE-7 |
| Ethyl Acetate | T | B | IB-45,46,47 |
| | | | IXB-26 |
| Ethyl Acrylate | T | B | IB-48,49,50 |
| | | | IXB-27 |
| Ethylbenzene | P,S | D | ID-34 to 38 |
| | | | IID-1 |
| | | | VD-10,11,12 |
| | | | VIID-9,10 |
| | | | IXD-34 to 37 |
| Ethylbutanol | | A | IA-19,20,21 |
| 2-Ethylbutanol | | A | IXA-10 |
| Ethylene Chloride | | F | VIIF-18 |
| Ethylene Chlorohydrin | | F | VIIF-19 |
| Ethylenediamine | A,H,S | C | IC-24 |
| | | | IXC-16 |
| Ethylene Dichloride[c] | S | F | VF-19,20,21 |
| | | | VIIF-20,21 |
| | | | IXF-30,31,32 |
| | | | XF-11 |
| Ethylene Glycol[b] | | B | IB-51 |
| | | | IXB-28 |
| Ethylene Glycol Monobutyl Ether | | E | IXE-8 |
| Ethylene Glycol Monoethyl Ether | | E | IXE-9 |
| Ethylene Glycol Monoethyl Ether Acetate | | E | IXE-10 |
| Ethylene Glycol Monhexyl Ether | | E | IXE-11 |
| Ethylene Glycol Monomethyl Ether | | E | IXE-12 |
| Ethyl Ether | T | E | IIIE-3 |
| 2-Ethylhexanol | | A | IA-22 |
| | | | IXA-11 |
| 2-Ethyl-1-Hexanol | | A | IXA-12 |
| | | | XA-4 |
| 2-Ethylhexylacrylate | | B | IB-52,53,54 |
| N-Ethylmorpholine | | C | IXC-17 |
| Ferbam | | J | IJ-11 |
| Fluoranthrene | | M | IXM-5 |
| | | | XM-5 |
| 2-Fluorenamine | | C | IC-25 |
| Formaldehyde | H,T,S | B | IB-55,56 |
| | | | IIIB-6,7 |
| | | | IXB-29 |
| Formamide | | B | IB-57 |

(continued)

INDEX (continued)

| Compound | Pollutant Group* | Chemical Class.** | Compound Code No.*** |
|---|---|---|---|
| Formic Acid | S,T | B | IB-58 |
| | | | IXB-30 |
| Furfuryl Alcohol | | A | IA-23,24 |
| Glutamic Acid | | B | IB-59 |
| Glycerine | | B | IB-60 |
| Glycerol | | B | IIIB-8,9 |
| Glycine | | B | IB-61 |
| Heptanoic Acid | | B | IXB-31 |
| | | | XB-5 |
| Heptachlor | A,H,P,S | J | IJ-12 |
| | | | IIIJ-8 |
| | | | IXJ-32,33 |
| Heptachlorepoxide | H,P | J | IIIJ-9 |
| Heptane | | B | IB-62 to 65 |
| m-Heptanol | | A | IXA-13 |
| | | | XA-5 |
| Herbicides (Unspecified) | | J | IXJ-34,35 |
| Herbicide Orange | | J | IJ-13 |
| Hexachlorobenzene | H,P,T | D | ID-39,40 |
| | | | IIID-4 |
| | | | VD-13 |
| | | | VIID-11,12 |
| | | | IXD-38 |
| Hexachlorobutadiene | H,P,T | F | VF-22 |
| | | | VIIF-22 |
| | | | IXF-33 |
| | | | XF-12 |
| Hexachlorocyclopentadiene | H,P,S,T | F | VF-23 |
| Hexachloroethane | H,T,P | F | VIIF-23 |
| | | | IXF-34,35 |
| | | | XF-13 |
| Hexadecane | | B | IXF-32 |
| | | | XF-6 |
| Hexanol | | A | IA-25 |
| 1-Hexanol | | A | IA-26,27 |
| m-Hexanol | | A | IXA-14 |
| Hexylamine | | C | IXC-18 |
| | | | XC-7 |
| Hexylene Glycol | | B | IXB-33 |
| Hydracrylonitrile | | B | IB-66 |
| Hydroquinone | | D | IIID-5,6 |
| | | | IXD-39 |
| 4-Hydroxybenzenecarbonitrile | | D | ID-41 |

(continued)

INDEX (continued)

| Compound | Pollutant Group* | Chemical Class.** | Compound Code No.*** |
|---|---|---|---|
| Iron | | G | IG-15 |
| | | | IIG-26,27,28 |
| | | | IIIG-8 |
| | | | IVG-2 |
| | | | IXG-12,13 |
| Iron ($Fe^{+2}$) | | G | IG-13 |
| Iron ($Fe^{+3}$) | | G | IG-14 |
| Isobutanol | T | A | IXA-15 |
| Isobutyl Acetate | | B | IXB-34 |
| Isophorone | P | B | IB-67 |
| | | | VIIB-3 |
| | | D | IXD-40,41 |
| Isophthalic Acid | | L | IL-9 |
| Isoprene | S | B | IXB-35 |
| Isopropanol | | A | IA-28 to 32 |
| | | | IXA-16 |
| Isopropyl Acetate | | B | IXB-36 |
| Isopropyl Ether | | E | IE-1,2,3 |
| | | | IXE-13 |
| Kepone | H,S,T | J | IXJ-36 |
| Lactic Acid | | B | IB-68 |
| Lauric Acid | | B | IB-69 |
| | | | IXB-37 |
| | | | XB-7 |
| Lead | H,P | G | IG-16,17 |
| | | | IIG-29 to 33 |
| | | | IIIG-9,10 |
| | | | IXG-14,15,16 |
| | | | XIIG-6,7 |
| Lindane | S | J | IJ-14 |
| | | | IIJ-4 |
| | | | IIIJ-10 |
| | | | IXJ-37,38 |
| Malathion | S | J | IJ-15,16 |
| | | | IIIJ-11 |
| L-Malic Acid | | B | IB-70 |
| DL-Malic Acid | | B | IB-71 |
| Malonic Acid | | B | IB-72 |
| Maneb | | J | IJ-17 |
| Manganese | | G | IG-18,19 |
| | | | IIG-34,35,36 |
| | | | IVG-3 |
| | | | IXG-17,18,19 |

(continued)

INDEX (continued)

| Compound | Pollutant Group* | Chemical Class.** | Compound Code No.*** |
|---|---|---|---|
| Mercury | H,P,T | G | IG-20,21<br>IIG-37,38,39<br>VIIG-1<br>IXG-20 to 24<br>XIIG-8 |
| Methanol | T | A | IA-33 to 38<br>IIIA-3,4<br>IXA-17,18 |
| Methyl Acetate | | B | IIIB-10,11<br>IXB-38 |
| 7-Methyl-1,1-benzanthracene | | M | IM-9 |
| 2-Methylbenzenecarbonitrile | | D | ID-42 |
| 3-Methylbenzenecarbonitrile | | D | ID-43 |
| 4-Methylbenzenecarbonitrile | | D | ID-44 |
| Methyl Butyl Ketone | | B | IXB-39 |
| 20-Methylcholanthrene | | M | IM-10 |
| 4-Methylcyclohexanol | | A | IA-39 |
| Methyl Decanoate | | B | IXB-40<br>XB-8 |
| Methyl Dodecanoate | | B | IXB-41<br>XB-9 |
| 4,4'-Methylene bis-(2-Chloroaniline) | H,T | D | IXD-42 |
| Methylene Chloride | P | F | IF-5<br>IXF-36 |
| Methyl Ethyl Ketone | H,T | B | VIIB-4,5<br>IXB-42 |
| Methylethylpyridine | | D | ID-45 |
| 2-Methyl-5-Ethylpyridine | | C | IXC-19 |
| Methyl Hexadecanoate | | B | IXB-43<br>XB-10 |
| Methyl Isoamyl Ketone | T | B | IXB-44 |
| N-Methyl Morpholine | | C | IXC-20 |
| Methyl Octadecanoate | | B | IXB-45<br>XB-11 |
| Methyl Parathion | A,H,S | J | IJ-18,19<br>IIIJ-12 |
| Methyl Propyl Ketone | | B | IXB-46 |
| Molybdenum | | G | IIG-40 |
| Monoethanolamine | | C | IXC-21 |
| Monoisopropanolamine | | C | IXC-22 |
| Morpholine | | C | IXC-23<br>XC-8 |
| Myristic Acid | | B | IXB-47<br>XB-12 |

(continued)

INDEX (continued)

| Compound | Pollutant Group* | Chemical Class.** | Compound Code No.*** |
|---|---|---|---|
| Napthalene | H,P,S,T | M | IM-11 to 14 |
| | | | IIM-9 |
| | | | VM-1 |
| | | | IXM-6,7 |
| B-Napthol | | K | XK-11 |
| B-Napthylamine | H,T | C | IXC-24 |
| Nickel | H,P | G | IG-22 to 26 |
| | | | IIG-41 to 44 |
| | | | IIIG-11 |
| | | | IXG-25 |
| Nitrilotriacetate | | B | IB-73 |
| o-Nitroaniline | | C | IC-26 |
| p-Nitroaniline | A,H | C | IC-27 |
| m-Nitrobenzaldehyde | | D | ID-46 |
| o-Nitrobenzaldehyde | | D | ID-47 |
| p-Nitrobenzaldehyde | | D | ID-47 |
| Nitrobenzene | H,P,S,T | D | ID-48 to 52 |
| | | | IID-2 |
| | | | VD-14 |
| | | | VIID-12 |
| | | | IXD-43,44,45 |
| m-Nitrobenzoic Acid | | D | ID-53 |
| o-Nitrobenzoic Acid | | D | ID-54 |
| p-Nitrobenzoic Acid | | D | ID-55 |
| Nitrofluorine | | D | ID-58 |
| m-Nitrophenol | S | K | IK-29 |
| o-Nitrophenol | P,S | K | IK-30,31 |
| | | | VIIK-11 |
| p-Nitrophenol | P,H,T,S | K | IK-29,32 |
| | | | IIIK-2 |
| | | | VIIK-12 |
| | | | XK-12,13 |
| m-Nitrotoluene | S | D | ID-56 |
| o-Nitrotoluene | S | D | ID-57 |
| p-Nitrotoluene | S | D | ID-57 |
| Nonylphenol | | K | IXK-8 |
| Octadecane | | B | IXB-48 |
| | | | XB-13 |
| Octanoic Acid | | B | IXB-49 |
| | | | XB-14 |
| Octanol | | A | IA-40,41 |
| | | | IXA-19 |
| | | | XA-6 |

(continue

INDEX (continued)

| Compound | Pollutant Group* | Chemical Class.** | Compound Code No.*** |
|---|---|---|---|
| Octylamine | | C | IXC-25 |
| | | | XC-9 |
| Oleic Acid | | B | IB-74 |
| Oxalic Acid | | B | IB-75 |
| Paraldehyde | T | D | ID-59 |
| | | | IXD-46 |
| Parathion | A,H,S | J | IJ-20,21 |
| | | | IIJ-5 |
| | | | IIIJ-13 |
| | | | IXJ-39,40 |
| PCB(Unspecified) | | I | IXI-1,2,3 |
| Pentachlorethane | H,T | F | VIIF-24 |
| Pentachlorophenol | A,H,P,S | K | IK-33,34 |
| | | | VIIK-13 |
| | | | IXK-9,10 |
| | | | XK-14 |
| | | J | IJ-22 |
| Pentamethylbenzene | | D | ID-60 |
| Pentanamide | | C | IC-29 |
| Pentane | | B | IB-76 |
| Pentanedinitrile | | B | IB-77,78 |
| Pentanitrile | | B | IB-79 |
| Pentanol | | A | IXA-20 |
| | | | XA-7 |
| Pentarylthritol | | A | IA-42 |
| Perchloroethylene | P,T | F | VF-24 |
| | | | VIIF-25 |
| Phenanthrene | P | M | IXM-8 |
| | | | XM-6 |
| Phenol | H,P,S,T | K | IK-35 to 43 |
| | | | IIIK-3,4,5 |
| | | | IVK-1 |
| | | | VK-1 |
| | | | VIIK-14 to 19 |
| | | | IXK-11 to 23 |
| | | | XK-15,16,17 |
| p-(Phenylazo) aniline | | C | IC-28 |
| p-Phenylazophenol | | K | IK-44 |
| 2,3-o-Phenylene Pyrene | | M | IIM-10 |
| Phenylenediamine | | C | IC-30 |
| m-Phenylenediamine | | C | IC-31 |
| o-Phenylenediamine | | C | IC-32 |
| p-Phenylenediamine | | C | IC-33 |
| Phenyl Methyl Carbinol | | A | IA-43 |

(continued)

INDEX (continued)

| Compound | Pollutant Group* | Chemical Class.** | Compound Code No.*** |
|---|---|---|---|
| Phthalic Acid | H | L | IL-11 |
| Phthalimide | | L | IL-12 |
| Piperidine | | C | IXC-26 |
| | | | XC-10 |
| Propanedinitrile | | B | IB-80 |
| Propanenitrile | | B | IB-81 |
| Propanol | | A | IXA-21,22 |
| | | | XA-8 |
| i-Propanol | | A | IIIA-5,6 |
| n-Propanol | | A | IA-44 |
| Propionaldehyde | | B | IXB-50 |
| Propionic Acid | S | B | IXB-51,52 |
| | | | XB-15 |
| Propoxur | | J | IJ-23 |
| B-Propriolactone | | B | IB-82 |
| Propyl Acetate | | B | IXB-53 |
| n-Propylbenzene | | D | ID-61 |
| Propylene Dichloride | | F | IXF-37 |
| Propylene Glycol | | B | IXB-54 |
| Propylene Oxide | S | B | IXB-55 |
| Pyrene | P | M | IIM-11 |
| | | | IXM-9 |
| | | | XM-7 |
| Pyridine | H,T | D | IXD-47,48 |
| | | C | IXC-27 |
| Pyrrole | | C | IXC-28 |
| | | | XC-11 |
| Pyruvic Acid | | B | IXB-56 |
| | | | XB-16 |
| Randox | | J | IIIJ-14 |
| Resorcinol | S,T | K | IXK-24 |
| | | | XK-18 |
| Selenium | H,P | G | IIG-45,46,47 |
| | | | IXG-26 |
| Silver | H,P | G | IIG-48,49,50 |
| Sodium Alkylbenzene Sulfonate | | D | ID-62 |
| Sodium Alkyl Sulfate | | B | IB-83 |
| Sodium Lauryl Sulfate | | B | IB-84 |
| Sodium-N-Oleyl-N-Methyl Taurate | | B | IB-85 |
| Sodium Pentachlorophenol | | K | IK-45 |
| Sodium α Sulfo Methyl Myristate | | B | IB-86 |
| Strontium | | G | IG-27 |

(continued)

INDEX (continued)

| Compound | Pollutant Group* | Chemical Class.** | Compound Code No.*** |
|---|---|---|---|
| Styrene | S | D | ID-63,64<br>VD-15<br>VIID-13<br>IXD-49,50,51 |
| Styrene Oxide | | D | IXD-52 |
| Tannic Acid | | B | IB-87 |
| 2,4,5-T Ester | S | J | IIJ-6<br>IXJ-41,42 |
| 1,2,3,4-Tetrachlorobenzene | | D | ID-65 |
| 1,2,3,5-Tetrachlorobenzene | | D | ID-66 |
| 1,2,4,5-Tetrachlorobenzene | H,T | D | ID-67,68 |
| Tetrachloroethane | H | F | VIIF-26<br>IXF-38<br>XF-14 |
| 1,1,1,2-Tetrachloroethane | H,T | F | VF-25 |
| 1,1,2,2-Tetrachloroethane | H,P,T | F | VF-26<br>VIIF-27<br>IXF-39 |
| Tetrachloroethylene | P | F | VF-27<br>VIIF-28<br>IXF-40,41<br>XF-15 |
| Tetraethylene Glycol | | B | IXB-58 |
| Tetrachloromethane | H,P,S,T | F | VF-28<br>VIIF-29 |
| Tetradecane | | B | IXB-57<br>XB-17 |
| Tetraethyl Pyrophosphate | | J | IJ-24 |
| Thallium | H,P | G | IIG-51,52<br>IXG-27 |
| Thanite | | J | IJ-25 |
| Thioacetamide | H,T | C | IC-34 |
| Thioglycollic Acid | | B | IB-88 |
| Thiouracil | | B | IB-89 |
| Thiourea | H,T | B | IB-90 |
| Tin | | G | IIG-53 |
| Titanium | | G | IIG-54 |
| Toluene | H,P,S,T | D | ID-69 to 75<br>VD-16,17<br>VIID-14,15<br>IXD-53,54,55 |
| m-Toluidine | | D | ID-76 |
| Toxaphene | P,H,T,S | D<br>J | IXD-56<br>IXJ-43,44,45<br>XJ-8 |

(continued)

INDEX (continued)

| Compound | Pollutant Group* | Chemical Class.** | Compound Code No.*** |
|---|---|---|---|
| Tribromomethane | H,P,T | F | VF-29<br>VIIF-30<br>IXF-42,43 |
| Tributylamine | | C | IXC-29<br>XC-12 |
| Trichloroacetic Acid | | F | IIIF-1 |
| 2,4,6-Trichloroaniline | | C | IC-35,36 |
| 1,2,3-Trichlorobenzene | | D | ID-77 |
| 1,2,4-Trichlorobenzene | H,P | D | ID-78<br>VD-18,19<br>VIID-16<br>IXD-57,58,59<br>XD-10 |
| 1,3,5-Trichlorobenzene | | D | ID-79,80 |
| Trichloroethane | H,P,T | F | VIIF-31 |
| 1,1,1-Trichloroethane | H,P,T | F | IF-6<br>VF-30,31<br>VIIF-32<br>IXF-44,45<br>XF-16 |
| 1,1,2-Trichloroethane | H,P,T | F | IF-7<br>VF-32,33<br>VIIF-33<br>IXF-46 |
| Trichloroethylene | P,H,T,S | F | IF-8,9<br>IIF-2<br>VF-34,35<br>VIIF-34,35<br>IXF-47,48 |
| Trichlorofluoromethane | H,P,T | F | VIIF-36<br>IXF-49 |
| Trichloromethane | H,P,S | F | VF-36<br>VIIF-37 |
| 2,3,5-Trichlorophenol | S | K | IK-46,47 |
| 2,4,5-Trichlorophenol | H,S,T | K | IK-48 |
| 2,4,6-Trichlorophenol | P,H,T,S | K | IK-49 to 52<br>VIIK-20<br>IXK-25<br>XK-19,20 |
| 2,4,5-Trichlorophenoxyacetic Acid | H,T | J | IJ-26,27 |
| 2,4,6-Trichlorophenoxyacetic Acid | | D | ID-82 |

(continued)

INDEX (continued)

| Compound | Pollutant Group* | Chemical Class.** | Compound Code No.*** |
|---|---|---|---|
| 2,4,5-Trichlorophenoxypropionic Acid | H | D | ID-81 |
| 1,2,3-Trichloropropane | H | F | IXF-50 |
| | | | XF-17 |
| Triethanolamine | S | C | IXC-30 |
| Triethylene Glycol | | B | IB-91 |
| | | | IXB-59 |
| Trifluralin | | J | IIIJ-15 |
| Trimethylphenol | | K | IXK-26 |
| 2,4,6-Trinitrotoluene (TNT) | | D | IVD-1 |
| | | | IXD-60,61 |
| | | | XD-11,12 |
| 2,6,6-Trinitrotoluene | | D | ID-83 |
| Urea | | B | IB-92 |
| Urethane | H,T | B | IB-93 |
| Valeric Acid | | B | IXB-60,61 |
| | | | XB-18 |
| Vanadium | | G | IIG-55 |
| Vinyl Acetate | S | B | IXB-62 |
| Vinyl Chloride | H,P,T | F | IF-10 |
| Vinylidene Chloride | H,T,S | F | VIIF-38 |
| Xylene | S,T | D | ID-85 |
| | | | VIID-17,18 |
| | | | IXD-62,63 |
| m-Xylene | S,T | D | ID-84 |
| o-Xylene | S,T | D | ID-84 |
| p-Xylene | S,T | D | ID-84 |
| Xylenol | S | K | VIIK-21 |
| Zinc | P | G | IG-28 to 34 |
| | | | IIG-56 to 61 |
| | | | IIIG-12,13 |
| | | | IVG-4 |
| | | | IXG-28,29 |
| | | | XIIG-9 |
| Ziram | | J | IJ-28 |
| Zireb | | J | IJ-29 |

* Pollutant Groups
- A RCRA List - Acute hazardous {Sec. 261.33(e)}
- H RCRA List - Hazardous {Appendix VII}
- P Priority Pollutant (Consent Decree)
- S Section 311 Compound
- T RCRA List - Toxic {Sec. 261.33(f)}

(a blank indicates that the compound does not fall into one of the above groups)

INDEX (continued)

** Chemical Classifications

| | | | |
|---|---|---|---|
| A | Alcohol | G | Metal |
| B | Aliphatic | I | PCB |
| C | Amine | J | Pesticide |
| D | Aromatic | K | Phenol |
| E | Ether | L | Phthalate |
| F | Halocarbon | M | Polynuclear Aromatic |

*** Compound Code Number - Refers to Compound Code Number used in Appendix Table E-1

a Also see Ethylene Glycol
b Also see 1,2-Ethanediol
c Also see 1,2-Dichloroethane
d Also see Ethylene Dichloride

Caution: Because a compound may have many synonyms as given in The Merck Index the reader should check for a compound under several names. This also applies to the pollutant group codes assigned to each compound because a complete crosscheck between synonyms was not undertaken.

TABLE E-1 CHEMICAL TREATABILITY

Concentration Process: Biological Treatment (I)
Chemical Classification: Alcohols(A)

| No.[a] | Chemical[b] | Description of Study: Study Type[c] | Waste Type[d] | Influent Char. | Results of Study | Comments | Ref. |
|---|---|---|---|---|---|---|---|
| IA-1 | n-Amyl Alcohol (1-Pentanol) | R | | | Toxic threshold to sensitive aquatic organisms (approx) >350 mg/l. | | 99 |
| IA-2 | Borneal | U | P | | 90.3% reduction based on COD; rate of biodegradation 8.9 mg COD/g hr. | Activated sludge process. | 81 |
| IA-3 | Butanol | F | I | | 70-90% reduction. | Aerated lagoon treatment. | 100 |
| IA-4 | Butanol | F | I | | 98% reduction w/80% BOD reduction. | Completely mixed activated sludge process. | 101 |
| IA-5 | Butanol | R | | | Toxic threshold to sensitive aquatic organisms (approx) <250 ppm. | | 99 |
| IA-6 | Butanol | F | I | BOD load of 42 lb/day/ 1000 $ft^3$ | 95-100% reduction. | Activated sludge process. | 56 |
| IA-7 | Butanol | U | P | | 98.8% reduction based on COD; rate of biodegradation 84 mg COD/g hr. | Activated sludge process. | 81 |
| IA-8 | sec-Butanol | U | P | | 98.5% reduction based on COD; rate of biodegradation 55 mg COD/g hr. | Activated sludge process. | 81 |
| IA-9 | tert-Butanol | U | P | | 95.5% reduction based on COD; rate of biodegradation 30 mg COD/g hr. | Activated sludge process. | 81 |
| IA-10 | tert-Butanol | L | S | | Substrate partially degraded. | Acclimated aerobic culture. | 102 |

(continued)

TABLE E-1(continued)

Concentration Process: Biological Treatment (I)
Chemical Classification: Alcohols (A)

| No.[a] | Chemical[b] | Description of Study: Study Type[c] | Waste Type[d] | Influent Char. | Results of Study | Comments | Ref. |
|---|---|---|---|---|---|---|---|
| IA-11 | 1,4-Butanediol | U | P | | 98.7% reduction based on COD; rate of biodegradation 40 mg COD/g hr. | Activated sludge process. | 81 |
| IA-12 | Cyclohexanol | U | P | | 96% reduction based on COD; rate of biodegradation 28 mg COD/g hr. | Activated sludge process. | 81 |
| IA-13 | Cyclopentanol | U | P | | 97% reduction based on COD; rate of biodegradation 55 mg COD/g hr. | Activated sludge process. | 81 |
| IA-14 | Dimethylcyclo-hexanol | U | P | | 92.3% reduction based on COD; rate of biodegradation 21.6 mg COD/g hr. | Activated sludge process. | 81 |
| IA-15 | 1,2-Ethanediol | L | S | 484 ppm | 74-76% reduction of BOD in 24 hrs. 7.5% of TOD exerted in 24 hrs. | Pure aerobic culture. | 103 |
| IA-16 | Ethanol | F | I | | 70-90% reduction. | Treated by aerated lagoon. | 100 |
| IA-17 | Ethanol | L | U | 1000 ppm | >99% reduction of BOD in 24 hrs. 24% of TOD exerted in 24 hrs. | Pure aerobic culture. | 103 |
| IA-18 | Ethanol | F | I | | 95-100% reduction w/80% BOD reduction. | Completely mixed activated sludge process. | 101 |
| IA-19 | Ethyl Butanol | F | I | | 30-50% reduction. | Treated by aerated lagoon. | 100 |
| IA-20 | Ethyl Butanol | F | I | | 95-100% reduction w/80% BOD reduction. | Completely mixed activated sludge process. | 101 |
| IA-21 | Ethyl Butanol | F | I | 42 lb/day/1000 $ft^3$ | 75-85% reduction. | Activated sludge process. | 56 |
| IA-22 | 2-Ethylhexanol | F | I | 42 lb/day/1000 $ft^3$ | 75-85% reduction. | Activated sludge process. | 56 |

(continued)

TABLE E-1 (continued)

Concentration Process: Biological Treatment (I)
Chemical Classification: Alcohols (A)

| No.[a] | Chemical[b] | Description of Study: Study Type[c] | Waste Type[d] | Influent Char. | Results of Study | Comments | Ref. |
|---|---|---|---|---|---|---|---|
| IA-23 | Furfuryl Alcohol | U | P | | 97.3% reduction based on COD; rate of biodegradation 41 mg COD/g hr. | Activated sludge process. | 81 |
| IA-24 | Furfuryl Alcohol | U | P | | 96.1% reduction based on COD; rate of biodegradation 40 mg COD/g hr. | Activated sludge process. | 81 |
| IA-25 | Hexanol | U | P | | 95-100% reduction. | Activated sludge process. | 56 |
| IA-26 | 1-Hexanol | F | I | | 70-90% reduction. | Treated by aerated lagoon. | 100 |
| IA-27 | 1-Hexanol | F | I | | 100% reduction w/80% BOD reduction. | Completely mixed activated sludge process. | 101 |
| IA-28 | Isopropanol | F | I | | 70-90% reduction. | Treated by aerated lagoon. | 100 |
| IA-29 | Isopropanol | F | I | | 96% reduction w/80% BOD reduction. | Completely mixed activated sludge. | 101 |
| IA-30 | Isopropanol | L | S | | 100% reduction; acetone was intermediate where upon 50% reduced by bio-oxidation & 50% removed by air stripping | Acclimated aerobic culture. | 102 |
| IA-31 | Isopropanol | U | P | | 99% reduction based on COD; rate of biodegradation 52 mg COD/g hr. | Activated sludge process. | 81 |
| IA-32 | Isopropanol | U | P | BOD load of 42 lb/day/1000 $ft^3$ | 95-100% reduction. | Activated sludge process. | 56 |

(continued)

TABLE E-1 (continued)

Concentration Process: Biological Treatment (I)
Chemical Classification: Alcohols (A

| No.[a] | Chemical[b] | Description of Study: Study Type[c] | Waste Type[d] | Influent Char. | Results of Study | Comments | Ref. |
|---|---|---|---|---|---|---|---|
| IA-33 | Methanol | F | I | BOD load of 42 lb/day/1000 $ft^3$ | 75-85% reduction. | Activated sludge process. | 56 |
| IA-34 | Methanol | F | I | | 30-50% reduction. | Treated by aerated lagoon. | 100 |
| IA-35 | Methanol | L | U | 997 ppm | 2.4-5.7% reduction of BOD 24 hrs. 36 to 41 mg $O_2$ used in 24 hrs. 2.4 -1.7% of TOD exerted in 24 hrs. | Pure aerobic culture. | 103 |
| IA-36 | Methanol | L | U | 500 ppm | 110 mg $O_2$ used in 24 hrs. 14.6% of TOD exerted in 24 hrs. | Pure aerobic culture. | 103 |
| IA-37 | Methanol | F | I | | 84% reduction w/80% BOD reduction. | Completely mixed activated sludge. | 101 |
| IA-38 | Methanol | F,C | I | 170-2550 ppb | Effluent conc. of 150-510ppb achieved. | Survey of 2 municipal wastewater treatment plants. | 65 |
| IA-39 | 4-Methylcyclohexanol | U | P | | 94% reduction based on COD; rate of biodegradation 40 mg COD/g hr. | Activated sludge process. | 81 |
| IA-40 | Octanol | F | I | | 75% reduction w/80% BOD reduction. | Completely mixed activated sludge. | 101 |
| IA-41 | Octanol | F | I | | 30-50% reduction. | Treated by aerated lagoon. | 100 |
| IA-42 | Pentarythritol | L | I | | No toxic effect. | Aerobic culture. | 104 |
| IA-43 | Phenyl Methyl Carbinol | F | I | | 85-95% reduction | Completely mixed activated sludge. | 101 |

(continued)

TABLE E-1 (continued)

Concentration Process: Biological Treatment (I)
Chemical Classification: Alcohols (A)

| No.[a] | Chemical[b] | Description of Study | | | Results of Study | Comments | Ref. |
|---|---|---|---|---|---|---|---|
| | | Study Type[c] | Waste Type[d] | Influent Char. | | | |
| IA-44 | n-Propanol | U | P | | 98.8% reduction based on COD; rate of biodegradation 71 mg COD/g hr. | Activated sludge process. | 81 |

(continued)

TABLE E-1 (continued)

Concentration Process: Biological Treatment (I)
Chemical Classification: Aliphatics (B)

| No.[a] | Chemical[b] | Description of Study | | | Results of Study | Comments | Ref. |
|---|---|---|---|---|---|---|---|
| | | Study Type[c] | Waste Type[d] | Influent Char. | | | |
| IB-1 | Acetaldehyde | F | I | | 70-90% reduction. | Treated by aerated lagoon. | 100 |
| IB-2 | Acetaldehyde | F | I | BOD load of 42 lb day/1000 $ft^3$ | 85-95% reduction. | Activated sludge process. | 56 |
| IB-3 | Acetaldehyde | F,C | I | 120-900 ppb | Effluent conc. of 90-1350ppb achieved. | Survey of 2 municipal wastewater treatment plants. | 65 |
| IB-4 | Acetone | F,C | I | 100-600 ppb | Effluent conc. of 50-300 ppb achieved. | See IB-3 for comments. | 65 |
| IB-5 | Acetone | F | I | | 70-90% reduction. | Treated by aerated lagoon. | 100 |
| IB-6 | Acetone | B | S | | Completely degraded or lost by stripping. | No identifiable degradation product. | 102 |
| IB-7 | Acetonitrile | B | U | 490 ppm | Oxygen consumption was totally inhibited for 24 hrs. | | 103 |
| IB-8 | Acetonitrile | B | S | 500 ppm | Toxic or inhibitory during oxidation periods up to 72 hrs. 1.4% TOD was exerted in 72 hrs. | | 106 |
| IB-9 | Acetylglycine | O | D | 500 ppm | Readily oxidized w/9.3% of TOD exerted after 6 hr & 18.5% after 24 hr of oxidation. | | 106 |
| IB-10 | Acrolein | F,C | I | 50-150 ppb | Effluent conc. of 20-200 ppb achieved. | Survey of 2 municipal wastewater treatment plants. | 65 |

(continued)

TABLE E-1 (continued)

Concentration Process: Biological Treatment (I)
Chemical Classification: Aliphatics (B)

| No.[a] | Chemical[b] | Description of Study: Study Type[c] | Waste Type[d] | Influent Char. | Results of Study | Comments | Ref. |
|---|---|---|---|---|---|---|---|
| IB-11 | Acrylic Acid | F | I | BOD load of 42 lb/day/1000 $ft^3$ | 85-95% reduction. | Activated sludge process. | 56 |
| IB-12 | Acrylic Acid | F | I | | 50-70% reduction. | Treated by aerated lagoon. | 100 |
| IB-13 | Acrylic Acid | F | I | | 85-95% reduction. | Completely mixed activated sludge process. | 101 |
| IB-14 | Acrylonitrile | F | I | | 70-90% reduction. | Treated by aerated lagoon. | 100 |
| IB-15 | Acrylonitrile | F | I | | 95-100% reduction. | Completely mixed activated sludge process. | 101 |
| IB-16 | Acrylonitrile | F | I | BOD load of 42 lb/day/1000 $ft^3$ | 95-100% reduction. | Activated sludge process. | 56 |
| IB-17 | Acrylonitrile | F | I | 140 ppm | 100% reduction. | Activated sludge process. | 90 |
| IB-18 | Adipic Acid | I | D | 500 ppm | Readily oxidized w/7.1% of TOD exerted after 24 hr of oxidation. | Oxidation improved greatly after 12 hrs. | 107 |
| IB-19 | Alanine | B | U | 500 ppm | Up to 39% of TOD exerted in 24 hrs. | Oxygen consumption showed no lag period. Material was readily degraded. | 103 |
| IB-20 | Ammonium Oxalate | U | P | | 92.5% reduction based on COD; rate of biodegradation 40 mg COD/g hr. | Activated sludge process. | 81 |
| IB-21 | Butanedinitrile | O | D | 500 ppm | Toxic at oxidation periods up to 72 hrs. | | 106 |

(continued)

TABLE E-1 (continued)

Concentration Process: Biological Treatment (I)
Chemical Classification: Aliphatics (B)

| No.[a] | Chemical[b] | Description of Study: Study Type[c] | Waste Type[d] | Influent Char. | Results of Study | Comments | Ref. |
|---|---|---|---|---|---|---|---|
| IB-22 | Butanedinitrile | O | D | 500 ppm | Readily, but slowly, oxidized, 3.8% of TOD exerted after 24 hr of oxidation. | Oxygen uptake showed plateau effect after 12 hrs. | 107 |
| IB-23 | Butanenitrile | O | D | 500 ppm | Inhibited oxidation for up to 24 hrs; after 72 hrs, up to 10.5% of TOD was exerted. | | 106 |
| IB-24 | Butanenitrile | O | D | | Readily, but slowly oxidized. Most rapid oxidation occurred in first 6 hrs, 1.7% of TOD exerted after 24 hrs. | See IB-23 for comments. | 107 |
| IB-25 | Butyleneoxide | O | D | 500 ppm | 9.6% of TOD exerted after 144 hrs of oxidation. | Degraded very slowly. | 108 |
| IB-26 | Butyric Acid | F | I | BOD load of 42 lb/day/1000 $ft^3$ | 85-95% reduction. | | 56 |
| IB-27 | Butyric Acid | O | D | 500 ppm | Up to 43% of TOD exerted after 72 hrs of oxidation. | | 106 |
| IB-28 | Butyric Acid | F | I | | 50-70% reduction. | Treated by aerated lagoon. | 100 |
| IB-29 | Butyric Acid | O | D | | Rapidly oxidized for first 6 hrs; after 24 hrs of oxidation up to 27.9% of TOD was exerted. | | 107 |
| IB-30 | Calcium Gluconate | L | U | 250 ppm | 13.6% of TOD exerted in 24 hrs. | | 103 |
| IB-31 | Caprolactam | U | P | | 94.3% reduction based on COD; rate of biodegradation 16 mg COD/g hr. | Activated sludge process | 81 |

(continued)

TABLE E-1 (continued)

Concentration Process: Biological Treatment (I)
Chemical Classification: Aliphatics (B)

| No.[a] | Chemical[b] | Description of Study: Study Type[c] | Waste Type[d] | Influent Char. | Results of Study | Comments | Ref. |
|---|---|---|---|---|---|---|---|
| IB-32 | Citric Acid | L | U | 550 ppm | 35 mg of $O_2$ used in 24 hrs. | Biodegradable, depressed $O_2$ consumption. | 103 |
| IB-33 | Crotonaldehyde | F | I | BOD load of 42 lb/day/1000 $ft^3$ | 95-100% reduction. | | 56 |
| IB-34 | Crotonaldehyde | F | I | | 90-100% reduction. | Treated by aerated lagoon. | 100 |
| IB-35 | Crotonaldehyde | F | I | | 95-100% reduction. | Completely mixed activated sludge process. | 101 |
| IB-36 | Cystine | L | U | 1000 ppm | Completely inhibited any consumption of $O_2$. | | 103 |
| IB-37 | L-Cystine | O | D | 500 ppm | Slowly oxidized w/4.7% of TOD exerted after 24 hrs of oxidation. | | 107 |
| IB-38 | Cyclohexanolone | U | P | | 92.4% reduction based on COD; rate of biodegradation 51.5 mg COD/g hr. | Activated sludge process. | 81 |
| IB-39 | Cyclohexanone | U | P | | 96% reduction based on COD; rate of biodegradation 30 mg COD/g hr. | Activated sludge process. | 81 |
| IB-40 | Cyclopentanone | U | P | | 95.4% reduction based on COD; rate of biodegradation 57 mg COD/g hr. | Activated sludge process. | 81 |
| IB-41 | Diethylene Glycol | U | P | | 95% reduction based on COD; rate of biodegradation 13.7 mg COD/g hr. | | 81 |
| IB-42 | 2,3-Dithiabutane | F,C | I | 10-120ppb | Not detectable in effluent. | See IB-3 for comments. | 65 |

(continued)

TABLE E-1(continued)

Concentration Process: Biological Treatment (I)
Chemical Classification: Aliphatics (B)

| No.[a] | Chemical[b] | Description of Study | | | Results of Study | Comments | Ref. |
|---|---|---|---|---|---|---|---|
| | | Study Type[c] | Waste Type[d] | Influent Char. | | | |
| IB-43 | Dulcitol | O | U | 1700 ppm | Slightly inhibitory | | 109 |
| IB-44 | Erucic Acid | O | D | 500 ppm | 11% of TOD exerted after 24 hrs of oxidation. | | 107 |
| IB-45 | Ethyl Acetate | F | I | | 90-100% reduction. | Treated by aerobic lagoon. | 100 |
| IB-46 | Ethyl Acetate | F | I | | 95-100% reduction. | Completely mixed activated sludge process. | 101 |
| IB-47 | Ethyl Acetate | F | I | BOD load of 42 lb/day/1000 $ft^3$ | 95-100% reduction. | Activated sludge process. | 56 |
| IB-48 | Ethyl Acrylate | F | I | BOD load of 42 lb/day/1000 $ft^3$ | 95-100% reduction. | Activated sludge process | 56 |
| IB-49 | Ethyl Acrylate | F | I | | 90-100% reduction. | Treated by aerobic lagoon | 100 |
| IB-50 | Ethyl Acrylate | F | I | | 95-100% reduction. | Completely mixed activated sludge process. | 101 |
| IB-51 | Ethylene Glycol | U | P | | 96.8% reduction based on COD; rate of biodegradation 41.7 mg COD/g hr. | Activated sludge process. | 81 |
| IB-52 | 2-Ethylhexyl-acrylate | F | I | BOD load of 42 lb/day/1000 $ft^3$ | 95-100% reduction. | Activated sludge process. | 56 |
| IB-53 | 2-Ethylhexyl-acrylate | F | I | | 90-100% reduction | Treated by aerobic lagoon. | 100 |

(continued)

TABLE E-1 (continued)

Concentration Process: Biological Treatment (I)
Chemical Classification: Aliphatics (B)

| No.[a] | Chemical[b] | Description of Study: Study Type[c] | Waste Type[d] | Influent Char. | Results of Study | Comments | Ref. |
|---|---|---|---|---|---|---|---|
| IB-54 | 2-Ethylhexyl-acrylate | F | I | | 95-100% reduction. | Completely mixed activated sludge process. | 101 |
| IB-55 | Formaldehyde | L | U | 720 ppm | Chemical inhibited $O_2$ consumption. | | 103 |
| IB-56 | Formaldehyde | O | D | 3000 ppm | <99% reduction after 24 hrs of aeration. | pH held at 7.2. | 104 |
| IB-57 | Formamide | O | D | 500 ppm | Slowly oxidized for first 12 hrs; 11.8% of TOD exerted after 24 hrs of oxidation. | | 107 |
| IB-58 | Formic Acid | L | | 720 ppm | 70% of TOD exerted after 24 hrs of oxidation. | No lag period during oxidation. | 107 |
| IB-59 | Glutamic Acid | L | | | 31% of TOD exerted after 24 hrs of oxidation. | | 103 |
| IB-60 | Glycerine | L | | 720 ppm | 248 mg of $O_2$ used in 24 hrs. | | 103 |
| IB-61 | Glycine | L | | 720 ppm | 58% of TOD exerted after 24 hrs. | | 103 |
| IB-62 | Heptane | F | I | BOD load of 42 lb/day/1000 $ft^3$ | 95-100% reduction. | Activated sludge process. | 56 |
| IB-63 | Heptane | O | D | 500 ppm | 38.7% of TOD exerted after 72 hrs. | | 106 |
| IB-64 | Heptane | F | I | | 90-100% reduction. | Treated by aerated lagoon. | 100 |
| IB-65 | Heptane | F | I | | 95-100% reduction. | Completely mixed activated sludge process. | 101 |
| IB-66 | Hydracrylonitrile | F | I | | 0-10% reduction. | Treated by aerated lagoon. | 100 |

(continued)

TABLE E-1(continued)

Concentration Process: Biological Treatment (I)
Chemical Classification: Aliphatics (B)

| No.[a] | Chemical[b] | Description of Study | | | Results of Study | Comments | Ref. |
|---|---|---|---|---|---|---|---|
| | | Study Type[c] | Waste Type[d] | Influent Char. | | | |
| IB-67 | Isophorone | F,C | D | | 93% reduction. | 21 day maximum retention time in a series of lagoons. | 81 |
| IB-68 | Lactic Acid | L | | 720 ppm | 78% of TOD exerted after 24 hrs. | | 7 |
| IB-69 | Lauric Acid | O | D | 500 ppm | 6.1% of TOD exerted after 24 hrs. | | 107 |
| IB-70 | L-Malic Acid | O | D | 500 ppm | 44.8% of TOD exerted after 24 hrs. | | 107 |
| IB-71 | DL-Malic Acid | O | D | 500 ppm | 20.8% of TOD exerted after 24 hrs. | A 10-16 hr lag period was indicated. | 107 |
| IB-72 | Malonic Acid | O | D | 500 ppm | Chemical inhibited $O_2$ uptake. | | 107 |
| IB-73 | Nitrilotri-acetate | L | S | 20 to 500 ppm | >90% reduction after acclimation. | | 111 |
| IB-74 | Oleic Acid | O | | | $O_2$ uptake inhibited. | | 109 |
| IB-75 | Oxalic Acid | L | | 250 ppm | $O_2$ uptake inhibited. | | 103 |
| IB-76 | Pentane | O | D | 500 ppm | $O_2$ uptake inhibited. | | 106 |
| IB-77 | Pentanedini-trile | O | D | 500 ppm | Toxic at oxidation periods of up to 72 hrs. | | 106 |
| IB-78 | Pentanedini-trile | O | D | 500 ppm | Slowly oxidized with 2.9% of TOD exerted after 24 hrs of oxidation. | | 106 |
| IB-79 | Pentanenitrile | O | D | 500 ppm | Toxic to 2 sludges at oxidation periods up to 24 hrs. | | 106 |
| IB-80 | Propanedini-trile | O | D | 500 ppm | Toxic for oxidation periods up to 72 hrs. | | 106 |

(continued)

TABLE E-1 (continued)

Concentration Process: Biological Treatment (I)
Chemical Classification: Aliphatics (B)

| No.[a] | Chemical[b] | Description of Study: Study Type[c] | Waste Type[d] | Influent Char. | Results of Study | Comments | Ref. |
|---|---|---|---|---|---|---|---|
| IB-81 | Propanenitrile | O | D | 500 ppm | Toxic for oxidation periods up to 72 hrs. | | 106 |
| IB-82 | β-Propiolactone | O | D | 500 ppm | $O_2$ uptake inhibited. | | 108 |
| IB-83 | Sodium Alkyl Sulfonate | O | | | 22% of TOD exerted after 5 days. | | 112 |
| IB-84 | Sodium Lauryl Sulfate | O | | | 65% of TOD exerted after 5 days. | | 112 |
| IB-85 | Sodium N-Oleyl-N-Methyl Taurate | O | | | 47-52% of TOD exerted in 5 days. | | 112 |
| IB-86 | Sodium α Sulfo Methyl Myristate | O | | | 33% of TOD exerted after 5 days. | | 112 |
| IB-87 | Tannic Acid | O | | | $O_2$ uptake inhibited. | | 109 |
| IB-88 | Thioglycollic Acid | L | | | $O_2$ uptake inhibited within 24 hrs. | | 103 |
| IB-89 | Thiouracil | O | D | 500 ppm | Chemical was oxidized but very slowly. 12.8% of TOD exerted after 144 hrs of oxidation. | | 108 |
| IB-90 | Thiourea | O | D | 500 ppm | $O_2$ uptake was inhibited by chemical for up to 144 hrs of oxidation. | | 103 |
| IB-91 | Triethylene Glycol | U | P | | 97.7% reduction based on COD; rate of biodegradation was 27 mg COD/g hr. | Activated sludge process | 81 |
| IB-[illegible] | Urea | L | | 1200 ppm | $O_2$ uptake inhibited. | | 103 |

(continued)

TABLE E-1 (continued)

Concentration Process: Biological Treatment (1)
Chemical Classification: Aliphatics (B)

| No.[a] | Chemical[b] | Description of Study | | | Results of Study | Comments | Ref. |
|---|---|---|---|---|---|---|---|
| | | Study Type[c] | Waste Type[d] | Influent Char. | | | |
| IB-93 | Urethane | O | D | | $O_2$ uptake inhibited. | | 108 |

(continued)

TABLE E-1 (continued)

Concentration Process: Biological Treatment (I)
Chemical Classification: Amines (C)

| No.[a] | Chemical[b] | Description of Study: Study Type[c] | Waste Type[d] | Influent Char. | Results of Study | Comments | Ref. |
|---|---|---|---|---|---|---|---|
| IC-1 | Acetanilide | U | P | | 94.5% reduction based on COD; rate of biodegradation 19 mg COD/g hr. | Activated sludge process. | 81 |
| IC-2 | p-Aminoacetanilide | U | P | | 93% reduction based on COD; rate of biodegradation 11.3 mg COD/g hr. | Activated sludge process. | 81 |
| IC-3 | m-Aminobenzoic Acid | U | P | | 97.5% reduction based on COD; rate of biodegradation 27.1 mg COD/g hr. | Activated sludge process. | 81 |
| IC-4 | o-Aminobenzoic Acid | U | P | | 97.5% reduction based on COD; rate of biodegradation 7.0 mg COD/g hr. | Activated sludge process. | 81 |
| IC-5 | p-Aminobenzoic Acid | U | P | | 96.2% reduction based on COD; rate of biodegradation 12.5 mg COD/g hr. | Activated sludge process. | 81 |
| IC-6 | m-Aminotoluene | U | P | | 97.7% reduction based on COD; rate of biodegradation 30 mg COD/g hr. | Activated sludge process. | 81 |
| IC-7 | o-Aminotoluene | U | P | | 97.7% reduction based on COD; rate of biodegradation 15.1 mg COD/g hr. | Activated sludge process. | 81 |
| IC-8 | p-Aminotoluene | U | P | | 97.7% reduction based on COD; rate of biodegradation 20 mg COD/g hr. | Activated sludge process. | 81 |
| IC-9 | Aniline | U | P | | 94.5% reduction based on COD; rate of biodegradation 19 mg COD/g hr. | Activated sludge | 81 |
| IC-10 | Aniline | U | I | 500 ppm 30°C | 100% reduction in 15 hrs. | Biodegradation by mutant pseudomonas. | 92 |

(continued)

TABLE E-1 (continued)

Concentration Process: Biological Treatment (I)
Chemical Classification: Amines (C)

| No.[a] | Chemical[b] | Description of Study: Study Type[c] | Waste Type[d] | Influent Char. | Results of Study | Comments | Ref. |
|---|---|---|---|---|---|---|---|
| IC-11 | Aniline | O | O | 500 ppm | $O_2$ uptake inhibited for up to 72 hrs. | | 108 |
| IC-12 | Benzamide | O | O | 500 ppm | $O_2$ uptake inhibited for first 6 hrs. 63% of TOD exerted after 144 hrs of oxidation. | | 108 |
| IC-13 | Benzidine | O | D | 500 ppm | $O_2$ uptake inhibited. | | 108 |
| IC-14 | Benzidine | F,C | D | 1.6 ppb | 0% reduction. | Activated sludge process. | 81 |
| IC-15 | Benzylamine | O | D | 500 ppm | $O_2$ uptake inhibited. | | 108 |
| IC-16 | Butanamide | O | D | 500 ppm | Slowly oxidized w/6.4% of TOD exerted after 24 hrs of oxidation. | | 107 |
| IC-17 | m-Chloroaniline | U | P | | 97.2% reduction based on COD; rate of biodegradation 6.2 mg COD/g hr. | Activated sludge process. | 81 |
| IC-18 | o-Chloroaniline | U | P | | 97.2% reduction based on COD; rate of biodegradation 16.7 mg COD/g hr. | Activated sludge process. | 81 |
| IC-19 | p-Chloroaniline | U | P | | 96.5% reduction based on COD; rate of biodegradation 5.7 mg COD/g hr. | Activated sludge process. | 81 |
| IC-20 | Diethanolamine | U | P | | 97% reduction based on COD; rate of biodegradation 19.5 mg COD/g hr. | Activated sludge process. | 81 |
| IC-21 | 2,3-Dimethylaniline | U | P | | 96.5% reduction based on COD rate of biodegradation 12.7 mg COD/g hr. | Activated sludge process. | 81 |

(continued)

TABLE E-1 (continued)

Concentration Process: Biological Treatment (I)
Chemical Classification: Amines (C)

| No.[a] | Chemical[b] | Description of Study: Study Type[c] | Waste Type[d] | Influent Char. | Results of Study | Comments | Ref. |
|---|---|---|---|---|---|---|---|
| IC-22 | 2,5-Dimethyl-aniline | U | P | | 96.5% reduction based on COD; rate of biodegradation 3.6 mg COD/g hr. | Activated sludge process. | 81 |
| IC-23 | 3,4-Dimethyl-aniline | U | P | | 76% reduction based on COD; rate of biodegradation 30 mg COD/g hr. | Activated sludge process. | 81 |
| IC-24 | Ethylene-diamine | U | P | | 97.5% reduction based on COD; rate of biodegradation 9.8 mg COD/g hr. | Activated sludge process. | 81 |
| IC-25 | 2-Fluorenamine | O | D | 500 ppm | $O_2$ uptake showed inhibitory effect but was slowly biologically oxidized. | | 108 |
| IC-26 | o-Nitroaniline | U | I | 18.5 ppm | $\leq$99.9% reduction. | Powder activated carbon & activated sludge treatment. | 58 |
| IC-27 | p-Nitroaniline | U | I | 6.7 ppm | $\leq$99.9% reduction. | See IC-26 for comments. | 58 |
| IC-28 | p-(Phenylazo) aniline | O | D | 500 ppm | $O_2$ uptake inhibited after 72 hrs of oxidation. | | 108 |
| IC-29 | Pentanamide | O | D | 500 ppm | Slowly oxidized w/13.6% of TOD exerted after 24 hrs of oxidation. | | 107 |
| IC-30 | Phenylene-diamine | O | D | 500 ppm | Toxic during 24 hrs of aeration | | 113 |
| IC-31 | m-Phenylene-diamine | U | P | | 60% reduction based on COD. | Activated sludge process. | 81 |
| IC-32 | o-Phenylene-diamine | U | P | | 33% reduction based on COD. | Activated sludge process. | 81 |
| IC-33 | p-Phenylene diamine | U | P | | 80% reduction based on COD. | Activated sludge process. | 81 |

(continued)

TABLE E-1(continued)

Concentration Process: Biological Treatment (I)
Chemical Classification: Amines (C)

| No.[a] | Chemical[b] | Description of Study | | | Results of Study | Comments | Ref. |
|---|---|---|---|---|---|---|---|
| | | Study Type[c] | Waste Type[d] | Influent Char. | | | |
| IC-34 | Thioacetamide | L | U | 100 ppm | $O_2$ uptake inhibited. | | 103 |
| IC-35 | 2,4,6-Trichloroaniline | U | I | 500 ppm | 100% reduction in 30 hrs. | See IC-10 for comments. | 92 |
| IC-36 | 2,4,6-Trichloroaniline | O | S | 10 ppm | $O_2$ uptake not inhibited. | | 113 |

(continued)

TABLE E-1 (continued)

Concentration Process: Biological Treatment (I)
Chemical Classification: Aromatics (D)

| No.[a] | Chemical[b] | Description of Study: Study Type[c] | Waste Type[d] | Influent Char. | Results of Study | Comments | Ref. |
|---|---|---|---|---|---|---|---|
| ID-1 | sec-Amyl-benzene | O | D | 500 ppm | Toxic for 24 hrs of aeration. | | 113 |
| ID-2 | tert-Amyl-benzene | O | D | 500 ppm | Toxic for 24 hrs of aeration. | | 113 |
| ID-3 | Benzaldehyde | O | | | $O_2$ uptake inhibited. | | 109 |
| ID-4 | Benzaldehyde | U | P | | 99% reduction based on COD; rate of biodegradation 119 mg COD/g hr. | Activated sludge process. | 81 |
| ID-5 | Benzaldehyde | O | D | 500 ppm | 61.3% of TOD exerted after 144 hrs of oxidation. | | 108 |
| ID-6 | Benzene | F | I | | 90-100% reduction. | Treated by aerated lagoon. | 100 |
| ID-7 | Benzene | F | I | | 95-100% reduction. | Completely mixed activated sludge process. | 101 |
| ID-8 | Benzene | O | D | 125 ppm | 1.44-1.45g of oxygen utilized per gram of substrate added after 72 hrs of oxidation. | | 114 |
| ID-9 | Benzene | O | D | 50-500 ppm | $O_2$ uptake of 34 ppm $O_2$/hr for 50 ppm chemical & 37 ppm $O_2$/hr for 500 ppm chemical. | | 114 |
| ID-10 | Benzene | F | I | | 95-100% reduction. | Activated sludge process. | 56 |
| ID-11 | Benzene Sulfonate | O | D | 500 ppm | Slowly oxidized for first 6 hrs; 62% of TOD exerted after 144 hrs. | | 108 |
| ID-12 | Benzenethiol | O | D | 500 ppm | $O_2$ uptake inhibited for up to 144 hrs of oxidation. | | 108 |

(continued)

TABLE E-1(continued)

Concentration Process: Biological Treatment (I)
Chemical Classification: Aromatics (D)

| No.[a] | Chemical[b] | Description of Study: Study Type[c] | Waste Type[d] | Influent Char. | Results of Study | Comments | Ref. |
|---|---|---|---|---|---|---|---|
| ID-13 | Benzoic Acid | U | P | | 99% reduction based on COD; rate of biodegradation 88.5 mg COD/g·hr. | | 81 |
| ID-14 | Benzoic Acid | F | I | BOD load of 42 lb/day/1000 $ft^3$ | 95-100% reduction | Activated sludge process. | 56 |
| ID-15 | Benzonitrile | O | D | 500 ppm | $O_2$ uptake inhibited for up to 72 hrs of oxidation. | | 106 |
| ID-16 | 3,4-Benzpyrene | O | D | 500 ppm | $O_2$ uptake inhibited for up to 144 hrs of oxidation. | | 106 |
| ID-17 | sec-Butyl-benzene | O | D | 500 ppm | Toxic for 24 hrs of aeration. | | 113 |
| ID-18 | tert-Butyl-benzene | O | D | 500 ppm | Toxic for 24 hrs of aeration. | | 113 |
| ID-19 | Chloranil | O | S | 10 ppm | $O_2$ uptake inhibited. | | 102 |
| ID-20 | Chlorobenzene | L | P | 200 ppm | 100% reduction in 14 hrs. | Biodegradation by mutant pseudomonas species. | 66 |
| ID-21 | 1,2,4,5-Dibenzpyrene | O | D | 500 ppm | $O_2$ uptake inhibited for up to 144 hrs of oxidation. | | 108 |
| ID-22 | m-Dichloro-benzene | L | P | 200 ppm | 100% reduction in 28 hrs. | See ID-20 for comments. | 66 |
| ID-23 | m-Dichloro-benzene | U | I | 200 ppm | 100% reduction in 30 hrs. | See ID-20 for comments. | 92 |
| ID-24 | o-Dichloro-benzene | L | P | 200 ppm | 100% reduction in 20 hrs. | See ID-20 for comments. | 66 |
| ID-25 | p-Dichloro-benzene | L | P | 200 ppm | 100% reduction in 25 hrs. | See ID-20 for comments. | 66 |

(continued)

TABLE E-1 (continued)

Concentration Process: Biological Treatment (I)
Chemical Classification: Aromatics (D)

| No.[a] | Chemical[b] | Description of Study: Study Type[c] | Waste Type[d] | Influent Char. | Results of Study | Comments | Ref. |
|---|---|---|---|---|---|---|---|
| ID-26 | 2,4-Dichloro-phenoxyacetic Acid | L | D | 174 ppm | No reduction until after 5 days. | Subjected to continuous aeration. | 115 |
| ID-27 | 2,6-Dichloro-phenoxyacetic Acid | L | D | 178 ppm | No reduction until after 3 days. | See ID-26 for comments. | 115 |
| ID-28 | 2,4-Dichloro-phenoxypro-pionic Acid | L | D | 186 ppm | No reduction after 7 days. | See ID-26 for comments. | 115 |
| ID-29 | 7,9-Dimethyl-benzacridine | O | D | 500 ppm | $O_2$ uptake inhibited after 144 hrs of oxidation. | | 108 |
| ID-30 | 7,10-Dimethyl-benzacridine | O | D | 500 ppm | $O_2$ uptake inhibited after after 144 hrs of oxidation. | | 108 |
| ID-31 | 3,5-Dinitro-benzoic Acid | U | P | | 50% reduction based on COD. | Activated sludge process. | 81 |
| ID-32 | 2,4-Dinitro-toluene | F,C | D | 390 ppb | Not detectable in effluent. | Activated sludge process. | 81 |
| ID-33 | 2,4-Dinitro-toluene | R | U | 146-188 ppm | 90% reduction. | Activated sludge process. | 90 |
| ID-34 | Ethylbenzene | F | I | BOD load of 42 lb/day/ 1000 $ft^3$ | 95-100% reduction | Activated sludge process. | 56 |
| ID-35 | Ethylbenzene | U | S | 192 ppb | 100% reduction. | | 21 |
| ID-36 | Ethylbenzene | F | I | | 90-100% reduction. | Treated by aerated lagoon. | 100 |
| ID-37 | Ethylbenzene | L | I | | 95-100% reduction | Completely mixed acti-vated sludge. | 101 |

(continued)

TABLE E-1 (continued)

Concentration Process: Biological Treatment (I)
Chemical Classification: Aromatics (D)

| No.[a] | Chemical[b] | Description of Study: Study Type[c] | Waste Type[d] | Influent Char. | Results of Study | Comments | Ref. |
|---|---|---|---|---|---|---|---|
| ID-38 | Ethylbenzene | O | D | 105 ppm | After 72 hrs of oxidation 1.7g of $O_2$ was used per g chemical added. | | 114 |
| ID-39 | Hexachlorobenzene | L | P | 200 ppm | 0% reduction in 120 hrs. | See ID-20 for comments. | 66 |
| ID-40 | Hexachlorobenzene | U | I | 200 ppm | 0% reduction in 120 hrs. | See ID-20 for comments. | 92 |
| ID-41 | 4-Hydroxybenzenecarbonitrile | O | D | 500 ppm | Toxic after 72 hrs of oxidation. | | 106 |
| ID-42 | 2-Methylbenzenecarbonitrile | O | D | 500 ppm | Toxic after 72 hrs of oxidation. | | 106 |
| ID-43 | 3-Methylbenzenecarbonitrile | O | D | 500 ppm | Toxic after 72 hrs of oxidation. | | 106 |
| ID-44 | 4-Methylbenzenecarbonitrile | O | D | 500 ppm | Toxic after 72 hrs of oxidation. | | 106 |
| ID-45 | Methylethylpyridine | F | I | | 10-30% reduction. | Treated by aerated lagoon. | 100 |
| ID-46 | m-Nitrobenzaldehyde | U | P | | 94% reduction based on COD; rate of biodegradation 10 mg COD/g hr. | Activated sludge process. | 81 |
| ID-47 | o-Nitrobenzaldehyde, p-Nitrobenzaldehyde | U | P | | 97% reduction based on COD; rate of biodegradation 13.8 mg COD/g hr. | Activated sludge | 81 |
| ID-48 | Nitrobenzene | U | P | | 98% reduction based on COD; rate of biodegradation 14 mg COD/g hr. | Activated sludge process. | 81 |

(continued)

TABLE E-1(continued)

Concentration Process: Biological Treatment (I)
Chemical Classification: Aromatics (D)

| No.[a] | Chemical[b] | Description of Study: Study Type[c] | Waste Type[d] | Influent Char. | Results of Study | Comments | Ref. |
|---|---|---|---|---|---|---|---|
| ID-49 | Nitrobenzene | U | S | 175 ppb | 100% reduction. | | 21 |
| ID-50 | Nitrobenzene | U | I | 530 ppb | ≤ 96.0% reduction. | Powder activated carbon & activated sludge treatment. | 58 |
| ID-51 | Nitrobenzene | F,C | D | 58 ppb | >0.1 ppb effluent conc. | 21 day maximum retention time in a series of lagoons. | 81 |
| ID-52 | Nitrobenzene | O | D | 500 ppm | $O_2$ uptake inhibited for up to 144 hrs of oxidation. | | 108 |
| ID-53 | m-Nitrobenzoic Acid | U | P | | 93.4% reduction based on COD; rate of biodegradation 7 mg COD/g hr. | Activated sludge process. | 81 |
| ID-54 | o-Nitrobenzoic Acid | U | P | | 93.4% reduction based on COD; rate of biodegradation 20 mg COD/g hr. | Activated sludge process. | 81 |
| ID-55 | p-Nitrobenzoic Acid | U | P | | 92% reduction based on COD; rate of biodegradation 19.7 mg COD/g hr. | Activated sludge process. | 81 |
| ID-56 | m-Nitrotoluene | U | P | | 98.5% reduction based on COD; rate of biodegradation 21 mg COD/g hr. | Activated sludge process. | 81 |
| ID-57 | o-Nitrotoluene p-Nitrotoluene | U | P | | 98% reduction based on COD; rate of biodegradation 32.5 mg COD/g hr. | Activated sludge process. | 81 |
| ID-58 | Nitrofluorine | O | D | 500 ppm | Slowly oxidized w/13.7% of TOD exerted after 144 hrs. | | 108 |
| ID-59 | Paraldehyde | F | I | | 30-50% reduction | Treated by aerated lagoon. | 100 |

(continued)

TABLE E-1(continued)

Concentration Process: Biological Treatment (I)
Chemical Classification: Aromatics (D)

| No.[a] | Chemical[b] | Description of Study | | | Results of Study | Comments | Ref. |
|---|---|---|---|---|---|---|---|
| | | Study Type[c] | Waste Type[d] | Influent Char. | | | |
| ID-60 | Pentamethyl-benzene | O | D | 500 ppm | $O_2$ uptake inhibited during first 24 hrs of aeration. | | 113 |
| ID-61 | n-Propylben-zene | O | D | 37.5 ppm | After 72 hrs of oxidation 0.67g of $O_2$ were utilized per g of substrate added. | | 114 |
| ID-62 | Sodium Alkyl-benzene Sul-fonate | O | | | 26% of TOD exerted after 5 days. | | 112 |
| ID-63 | Styrene | F | I | | 70-90% reduction. | Treated by aerated lagoon. | 100 |
| ID-64 | Styrene | F | I | | 95-100% reduction. | Completely mixed acti-vated sludge process. | 101 |
| ID-65 | 1,2,3,4-Tetra-chlorobenzene | L | P | 200 ppm | 74% reduction in 120 hrs. | See ID-20 for comments. | 66 |
| ID-66 | 1,2,3,5-Tetra-chlorobenzene | L | P | 200 ppm | 80% reduction in 120 hrs. | See ID-20 for comments. | 66 |
| ID-67 | 1,2,4,5-Tetra-chlorobenzene | U | I | 200 ppm | 80% reduction in 120 hrs. | See ID-20 for comments. | 66 |
| ID-68 | 1,2,4,5-Tetra-chlorobenzene | O | O | 500 ppm | No $O_2$ consumed during first 3 hrs; very slight uptake thereafter for first 24 hrs of aeration. | | 113 |
| ID-69 | Toluene | F | I | | 70-90% reduction. | Treated by aerated lagoon. | 100 |
| ID-70 | Toluene | F | I | | 95-100% reduction. | Completely mixed acti-vated sludge process. | 101 |
| [illegible] | Toluene | O | D | 500 ppm | $O_2$ uptake inhibited or very slightly oxidized for first 24 hrs of oxidation. | | 108 |

(continued)

TABLE E-1 (continued)

Concentration Process: Biological Treatment (I)
Chemical Classification: Aromatics (D)

| No.[a] | Chemical[b] | Description of Study: Study Type[c] | Waste Type[d] | Influent Char. | Results of Study | Comments | Ref. |
|---|---|---|---|---|---|---|---|
| ID-72 | Toluene | O | D | 100 ppm | 0.53-0.65g of $O_2$ used per g of substrate added after 72 hrs of oxidation. | | 114 |
| ID-73 | Toluene | O | D | 500 ppm | 48.3% of TOD exerted after 72 hrs of oxidation. | | 106 |
| ID-74 | Toluene | F,C | I | 8-150 ppb | 1.0-10.0 ppb effluent conc. | Survey of 2 municipal wastewater treatment plants. | 65 |
| ID-75 | Toluene | F | I | BOD load of 42 lb day/1000 $ft^3$ | 95-100% reduction. | Activated sludge process. | 56 |
| ID-76 | m-Toluidine | U | I | 500 ppm | 100% reduction in 10 hrs. | See ID-20 for comments. | 92 |
| ID-77 | 1,2,3-Trichlorobenzene | L | P | 200 ppm | 100% reduction in 43 hrs. | See ID-20 for comments. | 66 |
| ID-78 | 1,2,4-Trichlorobenzene | L | P | 200 ppm | 100% reduction in 46 hrs. | See ID-20 for comments. | 66 |
| ID-79 | 1,3,5-Trichlorobenzene | U | I | 200 ppm | 100% reduction in 50 hrs. | See ID-20 for comments. | 92 |
| ID-80 | 1,3,5-Trichlorobenzene | L | P | 200 ppm | 100% reduction in 50 hrs. | See ID-20 for comments. | 66 |
| ID-81 | 2,4,5-Trichlorophenoxypropionic Acid | L | O | 107.5 ppm | 99% reduction in 16.5 days. | | 115 |
| ID-82 | 2,4,6-Trichlorophenoxyacetic Acid | L | D | 53 ppm | 50% reduction in 14 days. | Subjected to continuous aeration. | 115 |
| ID-83 | 2,6,6-Trinitrotoluene | L | I | 100 ppm | 50-84% reduction in 3-14 hrs. | | 116 |

(continued)

TABLE E-1 (continued)

Concentration Process: Biological Treatment (I)
Chemical Classification: Aromatics (D)

| No.[a] | Chemical[b] | Description of Study: Study Type[c] | Waste Type[d] | Influent Char. | Results of Study | Comments | Ref. |
|---|---|---|---|---|---|---|---|
| ID-84 | m-xylene<br>o-xylene<br>p-xylene | O | D | 500 ppm | $O_2$ uptake inhibited after 24 hrs of oxidation. | | 113 |
| ID-85 | Xylene | F,C | I | 20-200ppb | 1.0-15.0 ppb effluent conc. | See ID-74 for comments. | 65 |

(continued)

TABLE E-1(continued)

Concentration Process: Biological Treatment (I)
Chemical Classification: Ethers (E)

| No.[a] | Chemical[b] | Description of Study | | | Results of Study | Comments | Ref. |
|---|---|---|---|---|---|---|---|
| | | Study Type[c] | Waste Type[d] | Influent Char. | | | |
| IE-1 | Isopropyl Ether | F | I | BOD load of 42 lb/day/1000 $ft^3$ | 85-95% reduction. | Activated sludge process. | 56 |
| IE-2 | Isopropyl Ether | F | I | | 70-90% reduction. | Treated by aerated lagoon. | 100 |
| IE-3 | Isopropyl Ether | F | I | | 85-95% reduction. | Completely mixed activated sludge process. | 101 |

(continued)

TABLE E-1 (continued)

Concentration Process: Biological Treatment (I)
Chemical Classification: Halocarbons (F)

| No.[a] | Chemical[b] | Description of Study: Study Type[c] | Waste Type[d] | Influent Char. | Results of Study | Comments | Ref. |
|---|---|---|---|---|---|---|---|
| IF-1 | Bromoform | F,C | I | 0.4-1.9 ppb | 100% reduction. | Survey of 2 municipal wastewater treatment plants. | 65 |
| IF-2 | Carbon Tetrachloride | U | S | 177 ppb | 100% reduction. | | 21 |
| IF-3 | Chloroform | F,C | I | 13 ppb | 100% reduction. | See IF-1 for comments. | 65 |
| IF-4 | 1,2-Dichloroethane | F,C | I | 0.4-260 ppb | 1.4 ppb effluent conc. | See IF-1 for comments. | 65 |
| IF-5 | Methylene Chloride | F,C | I | 10-430ppb | 2.0-50 ppb effluent conc. | See IF-1 for comments. | 65 |
| IF-6 | 1,1,1-Trichloroethane | F,C | I | 8.0-790 ppb | 1.0-20.0 ppb effluent conc. | See IF-1 for comments. | 65 |
| IF-7 | 1,1,2-Trichloroethane | U | I | 1305 ppb | $\leq$ 99.7% reduction. | Powder activated carbon & activated sludge treatment. | 58 |
| IF-8 | Trichloroethylene | F,C | I | 78 ppb | 100% reduction. | See IF-1 for comments. | 65 |
| IF-9 | Trichloroethylene | F,C | I | 214 ppb | 99% reduction | | 21 |
| IF-10 | Vinyl Chloride | F,C | I | 8 ppb | 100% reduction | See IF-1 for comments. | 65 |

(continued)

TABLE E-1 (continued)

Concentration Process: Biological Treatment (I)
Chemical Classification: Metals (G)

| No.[a] | Chemical[b] | Description of Study: Study Type[c] | Waste Type[d] | Influent Char. | Results of Study | Comments | Ref. |
|---|---|---|---|---|---|---|---|
| IG-1 | Barium | O | U | 1-100,000 ppm | $O_2$ uptake inhibited at conc. greater than 100 ppm. | | 109 |
| IG-2 | Cadmium | R | U | 6 ppb | 1.0 ppb effluent conc. | Activated sludge process. | 90 |
| IG-3 | Cadmium | F,C | I | 27 ppb | 16 ppb effluent conc. | Survey of 2 municipal wastewater treatment plants. | 65 |
| IG-4 | Cadmium | O | U | 1-100,000 ppm | Conc. of 1-10 ppm inhibited $O_2$ uptake. | | 109 |
| IG-5 | Chromium | F | D | ranged from 0.8-3.6ppm | 22-78% reductions achieved. | Survey of municipal wastewater treatment plants. | 122 |
| IG-6 | Chromium ($Cr^{+3}$) | C,P | D | 15 ppm | 0.2 ppb effluent conc. | | 123 |
| IG-7 | Chromium ($Cr^{+6}$) | O | U | 1-100,000 ppm | $O_2$ uptake inhibited at conc. greater than 100 ppm. | | 109 |
| IG-8 | Cobalt | L | S | 0.08-0.5 ppm | Inhibited biological growth. | Study of Nitrosomas bacteria. | 124 |
| IG-9 | Copper | R | U | 10 ppm | 75% reduction. | Activated sludge process. | 118 |
| IG-10 | Copper | F | D | ranged from 0.2-1.5ppm | 7-77% reductions achieved. | See IG-5 for comments. | 122 |
| IG-11 | Copper | L | S | 5-30 ppb<br>50-560ppb | Stimulated biological growth<br>Inhibited biological growth. | See IG-8 for comments. | 124 |
| IG-12 | Copper | C,P | D | 10 ppm | 75% reduction. | Activated sludge process. | 125 |
| IG-13 | Iron ($Fe^{+2}$) | O | U | 10-1000 ppm | $O_2$ uptake inhibited at conc. greater than 100 ppm. | | 109 |

(continued)

TABLE E-1 (continued)

Concentration Process: Biological Treatment (I)
Chemical Classification: Metals (G)

| No.[a] | Chemical[b] | Description of Study: Study Type[c] | Waste Type[d] | Influent Char. | Results of Study | Comments | Ref. |
|---|---|---|---|---|---|---|---|
| IG-14 | Iron ($Fe^{+3}$) | O | U | 0.01-100,000 ppm | $O_2$ uptake inhibited at conc. greater than 100 ppm. | | 109 |
| IG-15 | Iron | C,F | D | 7.17 ppm total iron | 83% reduction. | | 126 |
| | | | | 0.6 ppm soluble iron | 62% reduction. | | |
| IG-16 | Lead | O | | 10-100ppm | $O_2$ uptake inhibited | | 109 |
| IG-17 | Lead | L | S | 5-50 ppb | No stimulation or inhibition of biological growth. | See IG-8 for comments. | 124 |
| IG-18 | Manganese | L | S | 12.5-50 ppm | Stimulated biological growth | See IG-8 for comments. | 124 |
| | | | | 50-100ppm | Inhibited biological growth. | | |
| IG-19 | Manganese | L | S | 10 ppm | $O_2$ uptake inhibited. | | 109 |
| IG-20 | Mercury | O | S | 0-200 ppm | $O_2$ uptake inhibited. | | 127 |
| IG-21 | Mercury | L | S | 5-10 ppm | 51-58% reduction. | | 132 |
| IG-22 | Nickel | R | U | 10 ppm | 28% reduction. | Activated sludge process. | 118 |
| IG-23 | Nickel | F | D | ranged from 0.03-2.0 ppm | 0-33% reduction achieved. | See IG-5 for comments. | 122 |
| IG-24 | Nickel | C,P | D | 1-10 ppm | 28-42% reduction. | Activated sludge process. | 128 |

(continued)

TABLE E-1 (continued)

Concentration Process: Biological Treatment (I)
Chemical Classification: Metals (G)

| No.[a] | Chemical[b] | Description of Study: Study Type[c] | Waste Type[d] | Influent Char. | Results of Study | Comments | Ref. |
|---|---|---|---|---|---|---|---|
| IG-25 | Nickel | C,F | D | 270 ppb | 30% reduction. | Activated sludge process. | 129 |
| IG-26 | Nickel | P | D | 10 ppm | 28% reduction. | Activated sludge process. | 125 |
| IG-27 | Strontium | L | S | 5-50 ppb | No stimulation or inhibition of biological growth. | See IG-8 for comments. | 124 |
| IG-28 | Zinc | R | U | 10 ppm | 89% reduction. | Activated sludge process. | 118 |
| IG-29 | Zinc | F | D | ranged from 0.3-2.2ppm | 20-91% reduction achieved. | See IG-5 for comments. | 122 |
| IG-30 | Zinc | C,P | D | 2.5 ppm | 13% reduction in primary treatment. | | 128 |
| | | | | 10 ppm | 14% reduction in primary treatment. | | |
| IG-31 | Zinc | L | S | 0.08-0.5 ppm | Biological growth inhibited. | See IG-8 for comments. | 124 |
| IG-32 | Zinc | C,F | D | 0.91 ppm | 60% reduction. | Activated sludge process. | 131 |
| IG-33 | Zinc | L | S | 1 ppm | $O_2$ uptake inhibited. | | 109 |
| IG-34 | Zinc | R | U | 3.57 ppm | 57% reduction. | Activated sludge process. | 90 |

(continued)

TABLE E-1 (continued)

Concentration Process: Biological Treatment (I)
Chemical Classification: Pesticides (J)

| No.[a] | Chemical[b] | Description of Study: Study Type[c] | Waste Type[d] | Influent Char. | Results of Study | Comments | Ref. |
|---|---|---|---|---|---|---|---|
| IJ-1 | Aldrin | O | U | | Not significantly degraded. | | 121 |
| IJ-2 | Aminotriazole | O | U | | Not significantly degraded. | | 121 |
| IJ-3 | Chlordane | O | U | | Slightly degraded. | | 121 |
| IJ-4 | 2,4-D-Isoctyl-ester | O | U | | Biodegradable. | | 121 |
| IJ-5 | DDT | O | U | | Not significantly degraded. | | 121 |
| IJ-6 | DDVP | L | U | 37.5°C, 8.0 pH | 462 min half-life. | Biodegradation by mutant pseudomonas species. | 92 |
| IJ-7 | Diazinon | L | U | 20°C, 10.4 pH | 144 hr half-life. | See IJ-6 for comments. | 92 |
| IJ-8 | Diazinon | O | U | | Not significantly degraded. | | 121 |
| IJ-9 | Dieldrin | O | U | | Not significantly degraded. | | 121 |
| IJ-10 | Endrin | O | U | | Not significantly degraded. | | 121 |
| IJ-11 | Ferbam | O | U | | Biodegradable. | | 121 |
| IJ-12 | Heptachlor | O | U | 500 ppm | Slightly degraded. | | 121 |
| IJ-13 | Herbicide Orange | F | I | 1380 ppm | 77% reduction. | Pure $O_2$ & biological seeding provided. | 81 |
| IJ-14 | Lindane | O | U | | Not significantly degraded. | | 121 |

(continued)

TABLE E-1(continued)

Concentration Process: Biological Treatment (I)
Chemical Classification: Pesticides (J)

| No.[a] | Chemical[b] | Description of Study: Study Type[c] | Waste Type[d] | Influent Char. | Results of Study | Comments | Ref. |
|---|---|---|---|---|---|---|---|
| IJ-15 | Malathion | O | U | | Not significantly degraded. | | 121 |
| IJ-16 | Malathion | L | U | 25°C, 10.03 pH | 28 min half-life. | See IJ-6 for comments. | 92 |
| IJ-17 | Maneb | O | U | | Biodegradable | | 121 |
| IJ-18 | Methyl Parathion | L | U | 15°C | 7.5 min half-life. | See IJ-6 for comments. | 92 |
| IJ-19 | Methyl Parathion | O | U | | Not significantly degraded. | | 121 |
| IJ-20 | Parathion | L | U | 15°C | 32 min half-life. | See IJ-6 for comments. | 92 |
| IJ-21 | Parathion | O | U | | Not significantly degraded. | | 121 |
| IJ-22 | Pentachloro-phenol | O | U | 75-150ppm | Not significantly degraded. | | 121 |
| IJ-23 | Propoxur | O | U | 20°C, 10.0 pH | 40 min half-life. | See IJ-6 for comments. | 92 |
| IJ-24 | Tetraethyl Pyrophosphate | O | U | | Not significantly degraded. | | 121 |
| IJ-25 | Thanite | O | U | | Biodegradable | | 121 |
| IJ-26 | 2,4,5-Trichlo-rophenoxyace-tic Acid | O | U | 150 ppm | Slightly degraded. | | 121 |
| IJ-27 | 2,4,5-Trichlo-rophenoxyace-tic Acid | O | | | 99% reduction in 7.5 days. | Subjected to continuous aeration. | 115 |

(continued)

TABLE E-1(continued)

Concentration Process: Biological Treatment (I)
Chemical Classification: Pesticides (J)

| No.[a] | Chemical[b] | Description of Study | | | Results of Study | Comments | Ref. |
|---|---|---|---|---|---|---|---|
| | | Study Type[c] | Waste Type[d] | Influent Char. | | | |
| IJ-28 | Ziram | O | U | | Slightly degraded. | | 121 |
| IJ-29 | Zireb | O | U | | Slightly degraded. | | 121 |

(continued)

TABLE E-1 (continued)

Concentration Process: Biological Treatment (I)
Chemical Classification: Phenols (K)

| No.[a] | Chemical[b] | Description of Study: Study Type[c] | Waste Type[d] | Influent Char. | Results of Study | Comments | Ref. |
|---|---|---|---|---|---|---|---|
| IK-1 | 4-Chloro-3-Methylphenol | O | S | 10 ppm | $O_2$ uptake mildly inhibited. | | 102 |
| | | | | 50 ppm | $O_2$ uptake strongly inhibited. | | |
| | | | | 100 ppm | Toxic | | |
| IK-2 | 4-Chloro-3-Methylphenol | R | U | 25 ppm | Biodegradable in 5 days. | | 90 |
| IK-3 | 2-Chloro-4-Nitrophenol | U | P | | 71.5% reduction based on COD; rate of biodegradation 5.3 mg COD/g hr. | Activated sludge process. | 81 |
| IK-4 | 2-Chlorophenol | R | U | 150-200 ppm | 90-95% reduction. | Activated sludge process. | 90 |
| IK-5 | m-Chlorophenol | L | P | 200 ppm | 100% reduction in 28 hrs. | Biodegradation by mutant pseudomonas species. | 66 |
| IK-6 | o-Chlorophenol | L | P | 200 ppm | 100% reduction in 26 hrs. | See IK-5 for comments. | 66 |
| IK-7 | o-Chlorophenol | U | P | | 95.6% reduction based on COD; rate of biodegradation 25 mg COD/g hr. | Activated sludge process. | 81 |
| IK-8 | p-Chlorophenol | U | P | | 96% reduction based on COD; rate of biodegradation 11 mg COD/g hr. | Activated sludge process. | 81 |
| IK-9 | p-Chlorophenol | L | P | 200 ppm | 100% reduction in 33 hrs. | See IK-5 for comments. | 66 |
| IK-10 | m-Cresol | U | P | | 96% reduction based on COD; rate of biodegradation 55 mg COD/g hr. | Activated sludge process. | 81 |
| IK-11 | o-Cresol | U | P | | 95% reduction based on COD; rate of biodegradation 54 mg COD/g hr. | Activated sludge process. | 81 |

(continued)

TABLE E-1 (continued)

Concentration Process: Biological Treatment (I)
Chemical Classification: Phenols (K)

| No.[a] | Chemical[b] | Description of Study: Study Type[c] | Waste Type[d] | Influent Char. | Results of Study | Comments | Ref. |
|---|---|---|---|---|---|---|---|
| IK-12 | p-Cresol | U | P | | 95.5% reduction based on COD; rate of biodegradation 55 mg COD/g hr. | Activated sludge process. | 81 |
| IK-13 | 2,4-Diamino-phenol | U | P | | 83% reduction based on COD; rate of biodegradation 12 mg COD/g hr. | Activated sludge process. | 81 |
| IK-14 | 2,4-Dichloro-phenol | U | P | | 98% reduction based on COD; rate of biodegradation 10.5 mg COD/g hr. | Activated sludge process. | 81 |
| IK-15 | 2,4-Dichloro-phenol | R | U | 60 ppm | Biodegradable in 5 days. | | 90 |
| IK-16 | 2,4-Dichloro-phenol | U | I | 200 ppm | 100% reduction in 35 hrs. | See IK-5 for comments. | 90 |
| IK-17 | 2,4-Dichloro-phenol | L | P | 200 ppm | 100% reduction in 33 hrs. | See IK-5 for comments. | 90 |
| IK-18 | 2,4-Dichloro-phenol | L | I | 64 ppm | 98% reduction in 5 days | Subjected to continuous aeration. | 115 |
| IK-19 | 2,5-Dichloro-phenol | L | P | 200 ppm | 100% reduction in 38 hrs. | See IK-5 for comments. | 66 |
| IK-20 | 2,6-Dichloro-phenol | L | I | 64 ppm | 99% reduction in 5 days. | See IK-18 for comments. | 115 |
| IK-21 | 2,3-Dimethyl-phenol | U | P | | 95.5% reduction based on COD; rate of biodegradation 35 mg COD/g hr. | Activated sludge process. | 81 |
| IK-22 | 2,4-Dimethyl-phenol | U | P | | 94.5% reduction based on COD; rate of biodegradation 28.2mg COD/g hr. | Activated sludge process. | 81 |
| IK-23 | 2,5-Dimethyl-phenol | U | P | | 94.5% reduction based on COD; rate of biodegradation 10.6 mg COD/g hr. | Activated sludge process. | 81 |

(continued)

TABLE E-1 (continued)

Concentration Process: Biological Treatment (I)
Chemical Classification: Phenols (K)

| No.[a] | Chemical[b] | Description of Study: Study Type[c] | Waste Type[d] | Influent Char. | Results of Study | Comments | Ref. |
|---|---|---|---|---|---|---|---|
| IK-24 | 2,6-Dimethyl-phenol | U | P | | 94.3% reduction based on COD; rate of biodegradation 9 mg COD/g hr. | Activated sludge process. | 81 |
| IK-25 | 3,4-Dimethyl-phenol | U | P | | 97.5% reduction based on COD; rate of biodegradation 13.4 mg COD/g hr. | Activated sludge process. | 81 |
| IK-26 | 3,5-Dimethyl-phenol | U | P | | 89.3% reduction based on COD; rate of biodegradation 11.1 mg COD/g hr. | Activated sludge process. | 81 |
| IK-27 | 2,4-Dinitro-phenol | O | S | 1 ppm | Maximum $O_2$ uptake was 27.7ppm $O_2$/hr after 120 hrs of aeration | | 117 |
| | | | | 5 ppm | Maximum $O_2$ uptake was 21.3ppm $O_2$/hr after 120 hrs of aeration. | | |
| IK-28 | 2,4-Dinitro-phenol | U | P | | 85% reduction based on COD; rate of biodegradation 6 mg COD/g hr. | Activated sludge process. | 81 |
| IK-29 | m-Nitrophenol p- | U | P | | 95% reduction based on COD; rate of biodegradation 17.5 mg COD/g hr. | Activated sludge process. | 81 |
| IK-30 | o-Nitrophenol | U | P | | 97% reduction based on COD; rate of biodegradation 14 mg COD/g hr. | Activated sludge process. | 81 |
| IK-31 | o-Nitrophenol | U | I | 1275 ppb | $\leq$ 98.1% reduction. | Powder activated carbon & activated sludge treatment. | 58 |
| IK-32 | p-Nitrophenol | U | I | 725 ppb | $\leq$ 99.5% reduction. | See IK-31 for comments. | 58 |

(continued)

TABLE E-1(continued)

Concentration Process: Biological Treatment (I)
Chemical Classification: Phenols (K)

| No.[a] | Chemical[b] | Description of Study: Study Type[c] | Waste Type[d] | Influent Char. | Results of Study | Comments | Ref. |
|---|---|---|---|---|---|---|---|
| IK-33 | Pentachloro-phenol | L | P | 200 ppm | 26% reduction in 120 hrs. | See IK-5 for comments. | 66 |
| IK-34 | Pentachloro-phenol | L | P | 200 ppm | 26% reduction in 120 hrs. | See IK-5 for comments. | 92 |
| IK-35 | Phenol | R | U | 150-200 ppm | 90-95% reduction. | Activated sludge process. | 90 |
| IK-36 | Phenol | U | I | 19 ppm | ≤ 99.9% reduction. | See IK-31 for comments. | 58 |
| IK-37 | Phenol | F | I | 200 ppm | 95% reduction. | Activated sludge process. | 118 |
| IK-38 | Phenol | F | I | 5 ppm | 71% reduction. | Acclimated aerobic culture. | 119 |
| | | | | 18 ppm | 62% reduction. | | |
| IK-39 | Phenol | O | D | 500 ppm | 11.6% of TOD exerted after 72 hrs of oxidation. | | 106 |
| IK-40 | Phenol | O | D | 500 ppm | $O_2$ uptake inhibited for first 24 hrs of oxidation. 41.2% TOD exerted in 144 hrs. | | 108 |
| IK-41 | Phenol | B,C | I | 120 ppm @ 500 gpm | < 200 ppb effluent conc. | Activated sludge process. | 88 |
| IK-42 | Phenol | L | P | 200 ppm | 100% reduction in 8 hrs. | See IK-5 for comments. | 66 |
| IK-43 | Phenol | U | I | 500 ppm | 100% reduction in 10 hrs. | See IK-5 for comments. | 92 |
| IK-44 | p-Phenylazo-phenol | O | D | 500 ppm | $O_2$ uptake inhibited. | | 108 |
| IK-45 | Sodium Penta-chlorophenol | L | D | 15 ppm | 0% reduction. | | 120 |
| IK-46 | 2,3,5-Trichlo-rophenol | U | I | 200 ppm | 100% reduction in 55 hrs. | See IK-5 for comments. | 92 |

(continued)

TABLE E-1(continued)

Concentration Process: Biological Treatment (I)
Chemical Classification: Phenols (K)

| No.[a] | Chemical[b] | Description of Study | | | Results of Study | Comments | Ref. |
|---|---|---|---|---|---|---|---|
| | | Study Type[c] | Waste Type[d] | Influent Char. | | | |
| IK-47 | 2,3,5-Trichlorophenol | L | P | 200 ppm | 100% reduction in 52 hrs. | See IK-5 for comments. | 66 |
| IK-48 | 2,4,5-Trichlorophenol | L | D | 18.8 ppm | 99% reduction in 6.5 days. | See IK-18 for comments. | 115 |
| IK-49 | 2,4,6-Trichlorophenol | R | U | 20 ppm | Biodegradable in 5 days. | | 90 |
| IK-50 | 2,4,6-Trichlorophenol | L | P | 200 ppm | 100% reduction in 50 hrs. | See IK-5 for comments. | 66 |
| IK-51 | 2,4,6-Trichlorophenol | O | S | 1-10 ppm | $O_2$ uptake showed no inhibitory effect. | | 102 |
| | | | | 50-100ppm | $O_2$ uptake inhibited. | | |
| IK-52 | 2,4,6-Trichlorophenol | L | D | | 99% reduction in 5 days. | See IK-18 for comments. | 115 |

(continued)

TABLE E-1 (continued)

Concentration Process: Biological Treatment (I)
Chemical Classification: Phthalates (L)

| No.[a] | Chemical[b] | Description of Study: Study Type[c] | Waste Type[d] | Influent Char. | Results of Study | Comments | Ref. |
|---|---|---|---|---|---|---|---|
| IL-1 | Bis(2-ethylhexyl) Phthalate | R | U | 5 ppm | 70-78% reduction. | Activated sludge process. | 90 |
| IL-2 | Butylbenzyl Phthalate | R | U | | Biodegradable. | | 90 |
| IL-3 | Di-N-Butyl Phthalate | R | U | | Biodegradable in an environmental system at a level of 200 ppm. | | 90 |
| IL-4 | Diethyl Phthalate | R | U | | Biodegradable. | | 90 |
| IL-5 | Di(2-ethylhexyl) Phthalate | F | I | | 50-70% reduction. | Treated by aerated lagoon. | 100 |
| IL-6 | Dimethyl Phthalate | R | U | | Biodegradable, no inhibition of bacteria at levels of 1000 ppm. | | 90 |
| IL-7 | Dimethyl Phthalate | U | S | 215 ppb | 100% reduction. | | 21 |
| IL-8 | Di-N-Octyl Phthalate | R | U | | Biodegradable in an environmental system at a level of 63 ppm. | | 90 |
| IL-9 | Isophthalic Acid | U | P | | 95% reduction based on COD; rate of biodegradation 78.4 mg COD/g hr. | Activated sludge process. | 81 |
| IL-10 | Phthalimide | U | P | | 96.2% reduction based on COD; rate of biodegradation 20.8 mg COD/g hr. | Activated sludge process. | 81 |
| IL-11 | Phthalic Acid | U | P | | 96.8% reduction based on COD; rate of biodegradation 78.4 mg COD/g hr. | Activated sludge process. | 81 |

(continued)

TABLE E-1 (continued)

Concentration Process: Biological Treatment (I)
Chemical Classification: Polynuclear Aromatics (M)

| No.[a] | Chemical[b] | Description of Study: Study Type[c] | Waste Type[d] | Influent Char. | Results of Study | Comments | Ref. |
|---|---|---|---|---|---|---|---|
| IM-1 | Anthracene | O | D | 500 ppm | Toxic or inhibitory for up to 24 hrs. | | 108 |
| IM-2 | Benzanthracene | O | D | 500 ppm | Slowly oxidized; 2.1% of TOD exerted in 144 hrs of oxidation. | | 108 |
| IM-3 | Benzoperylene | R | U | | Biodegradable from a conc. of $4 \times 10^{-7}$ mg/l. | | 90 |
| IM-4 | D-Chloramphenicol | U | P | | 86.2% reduction based on COD; rate of biodegradation 3.3 mg COD/g hr. | Activated sludge process. | 81 |
| IM-5 | α,α′-Diethylstilbenediol | O | D | | $O_2$ uptake inhibited. | | 108 |
| IM-6 | 9,10-Dimethylanthracene | O | D | 500 ppm | $O_2$ uptake was not inhibited. Up to 19.5% of TOD was exerted after 144 hr of oxidation. | | 108 |
| IM-7 | 9,10-Dimethyl-1,2-benzanthracene | O | D | 500 ppm | Slowly oxidized; 12.7% of TOD exerted after 144 hr of oxidation. | | |
| IM-8 | 1,2-Diphenylhydrazine | F,C | D | 341 ppb @ 45 MGD | 28% reduction. | Activated sludge process. | 81 |
| IM-9 | 7-Methyl-1,2-benzanthracene | O | D | 500 ppm | $O_2$ uptake inhibited at least 24 hrs. | | 108 |
| IM-10 | 20-Methylcholanthrene | O | D | 500 ppm | Chemical showed both toxic or inhibitory effect & the ability to undergo slow biological oxidation. | | 108 |
| IM-11 | Naphthalene | F | I | | 70-90% reduction. | Treated by aerated lagoon. | 100 |

(continued)

TABLE E-1(continued)

Concentration Process: Biological Treatment (I)
Chemical Classification: Polynuclear Aromatics (M)

| No.[a] | Chemical[b] | Description of Study | | | Results of Study | Comments | Ref. |
|---|---|---|---|---|---|---|---|
| | | Study Type[c] | Waste Type[d] | Influent Char. | | | |
| IM-12 | Naphthalene | F | I | | 85-95% reduction. | Completely mixed aerated lagoon | 101 |
| IM-13 | Naphthalene | O | D | 500 ppm | $O_2$ uptake inhibited for 24 hrs. | | 108 |
| IM-14 | Naphthalene | F | I | BOD load of 42 lb/day/1000 $ft^3$ | 85-95% reduction. | Activated sludge process. | 56 |

(continued)

TABLE E-1(continued)

Concentration Process: Chemical Precipitation (II)
Chemical Classification: Aromatics (D)

| No.[a] | Chemical[b] | Description of Study | | | Results of Study | Comments | Ref. |
|---|---|---|---|---|---|---|---|
| | | Study Type[c] | Waste Type[d] | Influent Char. | | | |
| II D-1 | Ethyl Benzene | R | D+P | 153 ppb | 56% reduction w/alum. | Chemical coagulation was followed by dual media filtration. | 21 |
| II D-2 | Nitrobenzene | R | D+P | 160 ppb | 34% reduction w/alum. | See IID-1 for comments. | 21 |

(continued)

TABLE E-1 (continued)

Concentration Process: Chemical Precipitation (II)
Chemical Classification: Halocarbons (F)

| No.[a] | Chemical[b] | Description of Study | | | Results of Study | Comments | Ref. |
|---|---|---|---|---|---|---|---|
| | | Study Type[c] | Waste Type[d] | Influent Char. | | | |
| II F-1 | Carbon Tetra-chloride | R | D+P | 140 ppb | 51% reduction w/alum. | Chemical coagulation was followed by dual media filtration. | 21 |
| II F-2 | Trichloro-ethylene | R | D+P | 103 ppb | 40% reduction w/alum. | See IIF-1 for comments. | 21 |

(continued)

TABLE E-1 (continued)

Concentration Process: Chemical Precipitation (II)
Chemical Classification: Metals (G)

| No.[a] | Chemical[b] | Description of Study: Study Type[c] | Waste Type[d] | Influent Char. | Results of Study | Comments | Ref. |
|---|---|---|---|---|---|---|---|
| II G-1 | Antimony | P | S | 600 ppb | 62% reduction w/alum; 28% reduction w/lime. | 3 coagulants used: 220 ppm of alum @ pH=6.4. 40 ppm of ferric chloride @ pH=6.2; 415 ppm of lime @ pH=11.5; Chemical coagulation was followed by dual media filtration. | 39 |
| | | | | 500 ppb | 65% reduction w/ferric chloride. | | |
| II G-2 | Arsenic | P | D+P | 5 ppm @ 4 gpm @ pH=7.0 | Iron system- 90% reduction; Low lime system- 80% reduction; High lime system- 76% reduction. | 3 coagulant systems were used: Iron system used 45 ppm as Fe of $Fe_2(SO_4)_3$ @pH=6.0. Low lime system used 20 ppm as Fe of $Fe_2(SO_4)_3$ & 260 ppm of CaO @ pH=10.0. High lime system used 600 ppm of CaO @ pH=11.5. Chemical coagulation was followed by multimedia filtration. | 63 |
| II G-3 | Arsenic | F,C | D | 2.5 ppb | 56% reduction w/lime. | Lime dose of 350-400ppm as calcium oxide @ pH=11.3. | 64 |
| | | | | 3.3 ppb | 24% reduction w/lime. | | |
| II G-4 | Arsenic ($As^{+5}$) | R | U | 25 ppm | 97% reduction by lime softening. | | 90 |
| | | | | 21 ppm | 94% reduction by precipitation w/alum. | | |

(continued)

TABLE E-1 (continued)

Concentration Process: Chemical Precipitation (II)
Chemical Classification: Metals (G)

| No.[a] | Chemical[b] | Description of Study: Study Type[c] | Waste Type[d] | Influent Char. | Results of Study | Comments | Ref. |
|---|---|---|---|---|---|---|---|
| II G-5 | Barium | F,C | D | 81 ppb | 49% reduction w/lime. | See IIG-3 for comments. | 64 |
| | | | | 81 ppb | 36% reduction w/lime. | | |
| II G-6 | Barium | P | D+P | 5 ppm @ 4 gpm @ pH=7.0 | Iron system- 94% reduction; Low lime sytem-99% reduction; High lime system-78% reduction. | See IIG-2 for comments. | 63 |
| II G-7 | Barium | P | S | 500 ppb | 79% reduction w/alum. | See IIG-1 for comments. | 39 |
| II G-8 | Beryllium | R | U | 100 ppb | 97.8% reduction by lime softening. | | 90 |
| II G-9 | Beryllium | P | S | 100 ppb | 98.1% reduction w/alum; 94% reduction w/ferric chloride; 99.4% reduction w/lime | See IIG-1 for comments. | 39 |
| II G-10 | Bismuth | P | S | 600 ppb | 95.5% reduction w/ alum. 95.3% reduction w/lime. | See IIG-1 for comments. | 39 |
| | | | | 500 ppb | 94% reduction w/ferric chloride. | | |
| II G-11 | Cadmium | P | S | 700 ppb | 45% reduction by ferric chloride. | See IIG-1 for comments. | 39 |
| II G-12 | Cadmium | P | D+P | 5 ppm @ 4 gpm @ pH=7.0 | Iron system- 93% reduction; Low lime system-95% reduction High lime system-98% reduction. | See IIG-2 for comments. | 63 |
| II G-13 | Cadmium | F,C | D | 29 ppb | 92% reduction w/lime. | See IIG-3 for comments. | 64 |
| | | | | 9 ppb | 68% reduction w/lime. | | |

(continued)

TABLE E-1 (continued)

Concentration Process: Chemical Precipitation (II)
Chemical Classification: Metals (G)

| No.[a] | Chemical[b] | Description of Study: Study Type[c] | Waste Type[d] | Influent Char. | Results of Study | Comments | Ref. |
|---|---|---|---|---|---|---|---|
| II G-14 | Chromium | L,C | S | 5.2 ppm | 26.9% reduction w/lime. | Lime dose of 50 ppm added. | 16 |
| II G-15 | Chromium | F,C | D | 154 ppb | 37% reduction w/lime. | See IIG-3 for comments. | 64 |
| | | | | 192 ppb | 54% reduction w/lime. | | |
| II G-16 | Chromium ($Cr^{+3}$) | P | S | 700 ppb | 97.6% reduction w/ferric chloride. | See IIG-1 for comments. | 39 |
| II G-17 | Chromium ($Cr^{+3}$) | P | D+P | 5 ppm @ 4 gpm @ pH=7.0 | Iron system - 99% reduction; Low lime system - 98% reduction; High lime system - 98% reduction. | See IIG-2 for comments. | 63 |
| II G-18 | Chromium ($Cr^{+6}$) | P | S | 700 ppb | 64% reduction w/ferric chloride. | See IIG-1 for comments. | 39 |
| II G-19 | Chromium ($Cr^{+6}$) | P | D+P | 5 ppm @ gpm @ pH=7.0 | Iron system - 65% reduction; Low lime system - 40% reduction; High lime system - 22% reduction. | See IIG-2 for comments. | 63 |
| II G-20 | Cobalt | P | S | 500 ppb | 18% reduction w/ferric chloride; 91% reduction w/lime. | See IIG-1 for comments. | 39 |
| | | | | 800 ppb | 49% reduction w/alum. | | |
| II G-21 | Copper | P | S | 700 ppb | 67% reduction w/alum. | See IIG-1 for comments. | 39 |
| II G-22 | Copper | L,C | S | 4.6 ppm | 97.8% reduction w/lime. | See IIG-14 for comments. | 16 |

(continued)

TABLE E-1(continued)

Concentration Process: Chemical Precipitation (II)
Chemical Classification: Metals (G)

| No.[a] | Chemical[b] | Description of Study: Study Type[c] | Waste Type[d] | Influent Char. | Results of Study | Comments | Ref. |
|---|---|---|---|---|---|---|---|
| II G-23 | Copper | P | D+P | 5 ppm @ 4 gpm @ pH=7.0 | Iron system- 95.6% reduction Low lime system-92.8% reduction; High lime system- 84% reduction. | See IIG- 2 for comments. | 63 |
| II G-24 | Copper | F,C | D | 266 ppb<br>285 ppb | 73% reduction w/lime.<br>93% reduction w/lime. | See IIG- 3 for comments. | 64 |
| II G-25 | Copper | R | U | 15 ppm | 96% reduction. | | 90 |
| II G-26 | Iron | L,C | S | 10 ppm | 99% reduction w/lime. | See IIG- 14 for comments. | 16 |
| II G-27 | Iron | P | D+P | 5 ppm @ 4 gpm @ pH=7.0 | Iron system- 26% reduction; Low lime system-94% reduction | See IIG- 2 for comments. | 63 |
| II G-28 | Iron | F,C | D | 179 ppb<br>325 ppb | 91% reduction w/lime.<br>88% reduction w/lime. | See IIG- 3 for comments. | 64 |
| II G-29 | Lead | L,C | S | 4.9 ppm | 100% reduction w/lime. | See IIG- 14 for comments. | 16 |
| II G-30 | Lead | P | D+P | 5 ppm @ 4 gpm @ pH=7.0 | Iron system- 99% reduction; Low lime system-99% reduction High lime system-98% reduction. | See IIG- 2 for comments. | 63 |
| [illegible] G-[illegible] | Lead | F,C | D | 40 ppb<br>19 ppb | 43% reduction w/lime.<br>81% reduction w/lime. | See IIG- 3 for comments. | 64 |

(continued)

TABLE E-1 (continued)

Concentration Process: Chemical Precipitation (II)
Chemical Classification: Metals (G)

| No.[a] | Chemical[b] | Description of Study: Study Type[c] | Waste Type[d] | Influent Char. | Results of Study | Comments | Ref. |
|---|---|---|---|---|---|---|---|
| II G-32 | Lead | R | U | 330 ppb | 94.4% reduction w/lime. | Lime dose of 400 ppm added. | 90 |
| II G-33 | Lead | P | S | 600 ppb | 95.5% reduction w/alum. | See IIG-1 for comments. | 39 |
| II G-34 | Manganese | P | S | 700 ppb | 30% reduction w/alum. | See IIG-1 for comments. | 39 |
| II G-35 | Manganese | P | D+P | 5 ppm @ 4 gpm @ pH=7.0 | Iron system- 18% reduction; Low lime system-93% reduction; High lime system-98% reduction. | See IIG-2 for comments. | 63 |
| II G-36 | Manganese | F,C | D | 35 ppb | 87% reduction w/lime. | See IIG-3 for comments. | 64 |
| | | | | 38 ppb | 96% reduction w/lime. | | |
| II G-37 | Mercury | P | D+P | 0.5 ppm @ 4 gpm @ pH=7.0 | High lime system-70% reduction. | See IIG-2 for comments. | 63 |
| II G-38 | Mercury | F,C | D | 9 ppb | 71% reduction w/lime. | See IIG-3 for comments. | 64 |
| | | | | 1.2 ppb | 25% reduction w/lime. | | |
| II G-39 | Mercury | P | S | 500 ppb | 70% reduction w/lime. | See IIG-1 for comments. | 39 |
| | | | | 60 ppb | 94% reduction w/alum. | | |
| | | | | 50 ppb | 98% reduction w/ferric chloride. | | |
| II G-40 | Molybdenum | P | S | 600 ppb | 68% reduction w/ferric chloride; 0% reduction w/alum. | See IIG-1 for comments. | 39 |
| | | | | 500 ppb | 0% reduction w/lime. | | |

(continued)

TABLE E-1 (continued)

Concentration Process: Chemical Precipitation (II)
Chemical Classification: Metals (G)

| No.[a] | Chemical[b] | Description of Study: Study Type[c] | Waste Type[d] | Influent Char. | Results of Study | Comments | Ref. |
|---|---|---|---|---|---|---|---|
| II G-41 | Nickel | P | S | 900 ppb | 25% reduction w/alum. | See IIG-1 for comments. | 39 |
| II G-42 | Nickel | L,C | S | 4.8 ppm | 100% reduction w/lime. | See IIG-14 for comments. | 16 |
| II G-43 | Nickel | P | D+P | 5 ppm @ 4 gpm @ pH=7.0 | Iron system- 10% reduction; Low lime system-94% reduction; High lime system-97% reduction. | See IIG-2 for comments. | 63 |
| II G-44 | Nickel | R | U | | 52.4% reduction w/lime. | Lime dose of 400 ppm added. | 90 |
| II G-45 | Selenium | P | S | 100 ppb | 75% reduction w/ferric chloride. | See IIG-1 for comments. | 39 |
| | | | | 500 ppb | 35% reduction w/lime; 48% reduction w/alum. | | |
| II G-46 | Selenium | F,C | D | <2.5 ppb | 0% reduction w/lime. | See IIG-3 for comments. | 64 |
| | | | | 6.5 ppb | 0% reduction w/lime. | | |
| II G-47 | Selenium | R | U | 100 ppm | 80% reduction w/ferric sulfate. | Ferric sulfate dose of 100 ppm. | 90 |
| II G-48 | Silver | P | S | 500 ppb | 98.2% reduction w/ferric chloride; 97.1% reduction w/lime. | See IIG-1 for comments. | 39 |
| | | | | 600 ppb | 96.9% reduction w/alum. | | |
| II G-49 | Silver | F,C | D | 5.5 ppb | 85% reduction w/lime. | See IIG-3 for comments. | 64 |
| | | | | 13 ppb | 38% reduction w/lime. | | |

(continued)

TABLE E-1(continued)

Concentration Process: Chemical Precipitation (II)
Chemical Classification: Metals (G)

| No.[a] | Chemical[b] | Description of Study: Study Type[c] | Waste Type[d] | Influent Char. | Results of Study | Comments | Ref. |
|---|---|---|---|---|---|---|---|
| II G-50 | Silver | R | U | 500 ppm | 96% reduction w/lime. | | 90 |
| II G-51 | Thallium | R | U | 500 ppb | 54% reduction w/lime. | | 90 |
| II G-52 | Thallium | P | S | 600 ppb | 30% reduction w/ferric chloride; 31% reduction w/alum. | See IIG-1 for comments. | 39 |
| | | | | 500 ppb | 60% reduction w/lime. | | |
| II G-53 | Tin | P | S | 500 ppb | 98% reduction w/ferric chloride; 92% reduction w/lime. | See IIG-1 for comments. | 39 |
| | | | | 600 ppb | 95.3% reduction w/alum. | | |
| II G-54 | Titanium | P | S | 500 ppb | 98% reduction w/ferric chloride; 95.5% reduction w/lime | See IIG-1 for comments. | 39 |
| | | | | 600 ppb | 95.8% reduction w/alum. | | |
| II G-55 | Vanadium | P | S | 500 ppb | 97.2% reduction w/ferric chloride; 94% reduction w/ alum; 57% reduction w/lime. | See IIG-1 for comments. | 39 |
| II G-56 | Zinc | P | S | 2.5 ppm | 1% reduction w/alum. | See IIG-1 for comments. | 39 |
| II G-57 | Zinc | P | D+P | 5 ppm @ 4 gpm @ pH=7.0 | Iron system- 63% reduction; Low lime system-85% reduction; High lime system-76% reduction. | See IIG-2 for comments. | 63 |
| II G-58 | Zinc | L,C | S | 6.4 ppm | 100% reduction w/lime. | See IIG-14 for comments. | 16 |

(continued)

TABLE E-1 (continued)

Concentration Process: Chemical Precipitation (II)
Chemical Classification: Metals (G)

| No.[a] | Chemical[b] | Description of Study: Study Type[c] | Waste Type[d] | Influent Char. | Results of Study | Comments | Ref. |
|---|---|---|---|---|---|---|---|
| II G-59 | Zinc | F,C | D | 300 ppb | 90% reduction w/lime. | See IIG-3 for comments. | 64 |
| | | | | 380 ppb | 37% reduction w/lime. | | |
| II G-60 | Zinc | R | U | | 40.6% reduction by sedimentation. | | 90 |
| II G-61 | Zinc | R | U | | 91.4% reduction w/lime. | Lime dose of 400 ppm added. | 90 |

(continued)

TABLE E-1(continued)

Concentration Process: Chemical Precipitation (II)
Chemical Classification: Pesticides (J)

| No.[a] | Chemical[b] | Description of Study | | | Results of Study | Comments | Ref. |
|---|---|---|---|---|---|---|---|
| | | Study Type[c] | Waste Type[d] | Influent Char. | | | |
| II J-1 | DDT | L,C | R+P | 10 ppb | 98% reduction w/alum. | Chemical coagulation was followed by sand filtration. | 6 |
| II J-2 | Dieldrin | L,C | R+P | 10 ppb | 55% reduction w/alum. | See IIJ-1 for comments. | 6 |
| II J-3 | Endrin | L,C | R+P | 10 ppb | 35% reduction w/alum. | See IIJ-1 for comments. | 6 |
| II J-4 | Lindane | L,C | R+P | 10 ppb | <10% reduction w/alum. | See IIJ-1 for comments. | 6 |
| II J-5 | Parathion | L,C | R+P | 10 ppb | 5% reduction w/alum. | See IIJ-1 for comments. | 6 |
| II J-6 | 2,4,5-T ester | L,C | R+P | 10 ppb | 65% reduction w/alum. | See IIJ-1 for comments. | 6 |

(continued)

TABLE E-1 (continued)

Concentration Process: Chemical Precipitation (II)
Chemical Classification: Phthalates (L)

| No.[a] | Chemical[b] | Description of Study: Study Type[c] | Waste Type[d] | Influent Char. | Results of Study | Comments | Ref. |
|---|---|---|---|---|---|---|---|
| II L-1 | Bis(2-ethyl-hexyl)Phthalate | R | U | 0.5-3.5 ppb @ pH=10.0 | 80-90% reduction w/$Al_2(SO_4)_3$ | | 90 |
| II L-2 | Di-n-Butyl Phthalate | R | U | 2.5-4.5 ppb @ pH=10.0 | 60-70% reduction w/$Al_2(SO_4)_3$ | | 90 |
| II L-3 | Dimethyl Phthalate | R | D+P | 183 ppb | 15% reduction w/alum. | Chemical coagulation was followed by dual media filtration. | 21 |

(continued)

TABLE E-1 (continued)

Concentration Process: Chemical Precipitation (II)
Chemical Classification: Polynuclear Aromatics (M)

| No.[a] | Chemical[b] | Description of Study | | | Results of Study | Comments | Ref. |
|---|---|---|---|---|---|---|---|
| | | Study Type[c] | Waste Type[d] | Influent Char. | | | |
| II M-1 | Acenaphthene | R | U | 0.1-0.9 ppm | Precipitation w/alum. | | 90 |
| II M-2 | Acenaphthylene | R | U | 0.1-0.9 ppm | Precipitation w/alum. | | 90 |
| II M-3 | Benzanthracene | R | U | | Separable by gravity or sand filtration. | | 90 |
| II M-4 | 11,12-Benzo-fluoranthene | R | U | | Separable by gravity or sand filtration. | | 90 |
| II M-5 | 1,12-Benzo-perylene | R | U | | Separable by gravity or sand filtration. | | 90 |
| II M-6 | Benzo(a)-pyrene | R | U | | Separable by gravity or sand filtration. | | 90 |
| II M-7 | 2-Chloro-Napthalene | R | U | 0.1-0.9 ppm | Precipitation w/alum. | | 90 |
| II M-8 | Chrysene | R | U | | Separable by gravity or sand filtration. | | 90 |
| II M-9 | Naphthalene | R | U | | Separable by gravity or sand filtration. | | 90 |

(continued)

TABLE E-1 (continued)

Concentration Process: Chemical Precipitation (II)
Chemical Classification: Polynuclear Aromatics (M)

| No.[a] | Chemical[b] | Description of Study | | | Results of Study | Comments | Ref. |
|---|---|---|---|---|---|---|---|
| | | Study Type[c] | Waste Type[d] | Influent Char. | | | |
| II M-10 | 2,3-o-Phenylene Pyrene | R | U | | Separable by gravity or sand filtration. | | 90 |
| II M-11 | Pyrene | R | U | | Separable by gravity or sand filtration. | | 90 |

(continued)

TABLE E-1 (continued)

Concentration Process: Reverse Osmosis (III)
Chemical Classification: Alcohols (A)

| No.[a] | Chemical[b] | Description of Study: Study Type[c] | Waste Type[d] | Influent Char. | Results of Study | Comments | Ref. |
|---|---|---|---|---|---|---|---|
| III A-1 | Ethanol | B | P | 1000 ppm @ 150 mls | 21.4% reduction w/CA membrane 70.3% reduction w/C-PEI membrane. | CA and C-PEI membranes operated at 600 psig and room temperature. | 18 |
| III A-2 | Ethanol | L | P | 1000 ppm | 80-100% reduction w/NS-200 membrane; 60-80% reduction w/NS-100-T membrane; 40-60% reduction w/AP & NS-100 membranes; 20-40% reduction w/ CA3 & B-9 membranes; <20% reduction w/CA, CA-T, CAB, PBI, SPPO & B-10 membranes. | | 30 |
| III A-3 | Methanol | B | P | 1000 ppm @ 150 mls | 7.3% reduction w/CA membrane; 20% reduction w/C-PEI membrane. | See IIIA-1 for comments. | 18 |
| III A-4 | Methanol | L | P | 1000 ppm | 20-40% reduction w/B-9, NS-200 & NS-100T membranes; <20% reduction w/B-10, AP, SPPO, PBI, NS-100 membranes; 0% reduction w/CA, CA-T, CAB & CA3 membranes. | | 30 |
| III A-5 | i-Propanol | B | P | 1000 ppm @ 150 mls | 40.9% reduction w/CA membrane 88.1% reduction w/C-PEI membrane. | See IIIA-1 for comments. | 18 |
| III A-6 | i-Propanol | L | P | 1000 ppm | 80-100% reduction w/NS-100, NS-100T, NS-200, AP, B-9 & B-10 membranes; 40-60% reduction w/CA-T, CA & CA3 membranes; 20-40% reduction w/ SPPO, PBI & CAB membranes. | | 30 |

(continued)

TABLE E-1 (continued)

Concentration Process: Reverse Osmosis (III)
Chemical Classification: Aliphatics (B)

| No.[a] | Chemical[b] | Description of Study: Study Type[c] | Waste Type[d] | Influent Char. | Results of Study | Comments | Ref. |
|---|---|---|---|---|---|---|---|
| III B-1 | Acetic Acid | B | P | 1000 ppm @ 150 ml | 32% reduction w/CA membrane; 68.1% reduction w/C-PEI membrane. | CA and C-PEI membranes operated at 600 psig & room temperature. | 18 |
| III B-2 | Acetic Acid | L | P | 1000 ppm | 60-80% reduction w/AP, NS-200 & NS-100T membranes; 40-60% reduction w/NS-100 membrane; 20-40% reduction w/SPPO, B-9 & B-10 membranes; <20% reduction w/PBI, CA3, CAB, CA-T & CA membranes. | | 30 |
| III B-3 | Acetone | B | P | 1000 ppm @ 150 ml | 14.9% reduction w/CA membrane 81.8% reduction w/C-PEI membrane. | See IIIB-1 for comments. | 18 |
| III B-4 | Acetone | L | P | 1000 ppm | 80-100% reduction w/NS-200 & NS-100-T membrances; 60-80% reduction w/AP & NS-100 membranes; 40-60% reduction w/ B-9 & B-10 membranes; 20-40% reduction w/CA3 membrane; <20% reduction w/SPPO, PBI, CAB, CA-T & CA membranes. | | 30 |
| III B-5 | Dimethyl Sulfoxide | B | P | 250 ppm | 88.2% reduction w/CA membrane; 63.3% reduction w/C-PEI membrane. | See IIIB-1 for comments. | 18 |
| III B-6 | Formaldehyde | B | P | 1000 ppm | 21.9% reduction w/CA membrane; 56.7% reduction w/ C-PEI membrane. | See IIIB-1 for comments. | 18 |
| III B-7 | Formaldehyde | L | P | 1000 ppm | 60-80% reduction w/NS-200 membrane; 40-60% reduction w/AP, NS-100, CAB & NS-100-T | | 30 |

(continued)

TABLE E-1 (continued)

Concentration Process: Reverse Osmosis (III)
Chemical Classification: Aliphatics (B)

| No.[a] | Chemical[b] | Description of Study | | | Results of Study | Comments | Ref. |
|---|---|---|---|---|---|---|---|
| | | Study Type[c] | Waste Type[d] | Influent Char. | | | |
| III B-7 cont | | | | | membranes; 20-40% reduction w/B-9, CA3 & CA-T membranes; <20% reduction w/CA, PBI, SPPO & B-10 membranes. | | |
| III B-8 | Glycerol | B | P | 1000 ppm @ 150 ml | 89.9% reduction w/CA membrane; 97.8% reduction w/C-PEI membrane. | See IIIB-1 for comments. | 18 |
| III B-9 | Glycerol | L | P | 1000 ppm | 80-100% reduction w/CA-T, CAB, CA3, NS-100, NS-100T, NS-200, AP, B-9 & B-10 membranes; 60-80% reduction w/CA membrane; 40-60% reduction w/PBI membrane; 20-40% reduction w/SPPO membrane | | 30 |
| III B-10 | Methyl Acetate | B | P | 1000 ppm @ 150 ml | 4.6% reduction w/CA membrane 76.1% reduction w/C-PEI membrane. | See IIIB-1 for comments. | 18 |
| III B-11 | Methyl Acetate | L | P | 1000 ppm | 60-80% reduction w/NS-200, NS-100-T & NS-100 membranes; 40-60% reduction w/B-9 membrane; 20-40% reduction w/B-10, AP & CA-T membranes; <20% reduction w/SPPO, PBI & CA3 membranes; 0% reduction w/CA & CAB membranes. | | 30 |

(continued)

TABLE E-1 (continued)

Concentration Process: Reverse Osmosis (III)
Chemical Classification: Amines (C)

| No.[a] | Chemical[b] | Description of Study: Study Type[c] | Waste Type[d] | Influent Char. | Results of Study | Comments | Ref. |
|---|---|---|---|---|---|---|---|
| III C-1 | Aniline | B | P | 1000 ppm @ 150 ml | -3.4% reduction w/CA membrane; 82.9% reduction w/C-PEI membrane. | CA & C-PEI membranes operated at 600 psig & room temperature. | 18 |
| III C-2 | Aniline | L | P | 1000 ppm | 80-100% reduction w/NS-100-T membrane; 60-80% reduction w/B-10, NS-200 & NS-100 membranes; 40-60% reduction w/B-9 membrane; 20-40% reduction w/AP, CA3 & CAB membranes; <20% reduction w/SPPO & PBI membranes; 0% reduction w/CA & CA-T membranes. | | 30 |

(continued)

TABLE E-1 (continued)

Concentration Process: Reverse Osmosis (III)
Chemical Classification: Aromatics (D)

| No.[a] | Chemical[b] | Description of Study: Study Type[c] | Waste Type[d] | Influent Char. | Results of Study | Comments | Ref. |
|---|---|---|---|---|---|---|---|
| III D-1 | Chlorobenzene | R | U | ≤360 ppm | 97-100% reduction @ 50-100 $kg/cm^2$. | | 90 |
| III D-2 | Dinitrobenzene | B | P | 30 ppm @ 150 ml | 7.2% reduction w/CA membrane 81.4% reduction w/C-PEI membrane. | CA & C-PEI membranes operated @ 600 psig & room temperature. | 18 |
| III D-3 | 2,4-Dinitro-phenylhydra-zine | B | P | 30 ppm @ 150 ml | 3.2% reduction w/CA membrane 91.1% reduction w/C-PEI membrane. | See IIID-2 for comments. | 18 |
| III D-4 | Hexachloro-benzene | R | U | 638 ppm | 52% reduction. | | 90 |
| III D-5 | Hydroquinone | B | P | 1000 ppm | -2.5% reduction w/CA membrane 79.7% reduction w/C-PEI mem-brane. | CA & C-PEI membranes operated @ 600 psig & room temperature. | 18 |
| III D-6 | Hydroquinone | L | P | 1000 ppm | 80-100% reduction w/AP & NS-200 membranes; 60-80% re-duction w/B-10, NS-100-T & NS-100 membranes; 40-60% re-duction w/B-9 membrane; 20-40% reduction w/SPPO & CAB membranes; <20% reduction w/PBI & CA3 membranes; 0% re-duction w/CA & CA-T membranes | | 30 |

(continued)

TABLE E-1 (continued)

Concentration Process: Reverse Osmosis (III)
Chemical Classification: Ethers (E)

| No.[a] | Chemical[b] | Description of Study | | | Results of Study | Comments | Ref. |
|---|---|---|---|---|---|---|---|
| | | Study Type[c] | Waste Type[d] | Influent Char. | | | |
| III E-1 | bis(2-Chloro-isopropyl) Ether | B | P | 250 ppm @ 150 ml | 37.3% reduction w/CA membrane; 94% reduction w/C-PEI membrane. | CA & C-PEI membrane operated at 600 psig & room temperature. | 18 |
| III E-2 | Diethyl Ether | B | P | 1000 ppm @ 150 ml | 9.5% reduction w/CA membrane 90.3% reduction w/C-PEI membrane. | See IIIE-1 for comments. | 18 |
| III E-3 | Ethyl Ether | L | P | 1000 ppm | 80-100% reduction W/AP, NS-200, NS-100-T & NS-100 membranes; 60-80% reduction w/B-10 membrane; 40-60% reduction w/B-9, SPPO & PBI membranes; 20-40% reduction CAB & CA3 membranes; <20% reduction w/CA-T & CA membranes. | | 30 |

(continued)

TABLE E-1 (continued)

Concentration Process: Reverse Osmosis (III)
Chemical Classification: Halocarbons (F)

| No.[a] | Chemical[b] | Description of Study | | | Results of Study | Comments | Ref. |
|---|---|---|---|---|---|---|---|
| | | Study Type[c] | Waste Type[d] | Influent Char. | | | |
| III F-1 | Trichloroacetic Acid | B | P | 250 ppm @ 150 ml | 49.3% reduction w/CA membrane; 25% reduction w/C-PEI membrane. | CA & C-PEI membrane operated at 600 psig & room temperature. | 18 |

(continued)

TABLE E-1 (continued)

Concentration Process: Reverse Osmosis (III)
Chemical Classification: Metals (G)

| No.[a] | Chemical[b] | Description of Study: Study Type[c] | Waste Type[d] | Influent Char. | Results of Study | Comments | Ref. |
|---|---|---|---|---|---|---|---|
| III G-1 | Barium | B | P | 0.75 ppm | >86.7% reduction w/CA membrane | CA membrane operated at 400 psig & 16-22°C. | 18 |
| | | | | 0.85 ppm | >88.2% reduction w/CA membrane | | |
| | | | | 9.15 ppm | 97.8% reduction w/CA membrane | | |
| | | | | 7.05 ppm | >98.6% reduction w/CA membrane | | |
| III G-2 | Cadmium | B | P | 0.10 ppm | 90% reduction w/CA membrane | See IIIG-1 for comments. | 18 |
| | | | | 0.10 ppm | 90% reduction w/CA membrane | | |
| | | | | 0.96 ppm | 99% reduction w/CA membrane | | |
| | | | | 1.0 ppm | 98.7% reduction w/CA membrane | | |
| III G-3 | Chromic Acid | L,C | I | 200 ppm @ 20 gal/hr | 85% rejection over 200 hrs w/polybenzimidazole membrane. | Polybenzimidazole membrane operated at 1500 psi. | 24 |
| III G-4 | Chromium | B | P | 12.5 ppm | 97.6% reduction W/C-PEI membrane @ pH=8.0. | C-PEI membrane operated at 600 psig & room temperature. | 18 |
| | | | | 12.5 ppm | 91.3% reduction w/C-PEI membrane @ pH=11.0. | | |
| III G-5 | Chromium | B | P | 0.94 ppm | 96.9% reduction w/CA membrane | See IIIG-1 for comments. | 18 |
| | | | | 1.01 ppm | 95.0% reduction w/CA membrane | | |
| | | | | 8.65 ppm | 93.2% reduction w/CA membrane | | |
| | | | | 9.35 ppm | 85.1% reduction w/CA membrane | | |
| III G-6 | Copper | B | P | 12.5 ppm | 99.9% reduction w/C-PEI membrane @ pH=8.0 & 11.0. | See IIIG- 4 for comments. | 18 |
| III G-7 | Copper | B | P | 0.65 ppm | 97% reduction w/CA membrane | See IIIG- 1 for comments. | 18 |
| | | | | 0.7 ppm | 94.8% reduction w/CA membrane | | |
| | | | | 6.25 ppm | 99.6% reduction w/CA membrane | | |
| | | | | 6.5 ppm | 99.2% reduction w/CA membrane | | |
| III G-8 | Iron | B | P | 12.5 ppm | 100% reduction w/C-PEI membrane @ pH=8.0 & 11.0. | See IIIG-4 for comments. | 18 |

(continued)

TABLE E-1 (continued)

Concentration Process: Reverse Osmosis (III)
Chemical Classification: Metals (G)

| No.[a] | Chemical[b] | Description of Study: Study Type[c] | Waste Type[d] | Influent Char. | Results of Study | Comments | Ref. |
|---|---|---|---|---|---|---|---|
| III G-9 | Lead | B | P | 12.5 ppm | 100% reduction w/C-PEI membrane @ pH=8.0 & 11.0. | See IIIG-4 for comments. | 18 |
| III G-10 | Lead | B | P | 0.95 ppm | 99.5% reduction w/CA membrane | See IIIG-1 for comments. | 18 |
| | | | | 1.1 ppm | 97.8% reduction w/CA membrane | | |
| | | | | 4.75 ppm | 99.9% reduction w/CA membrane | | |
| | | | | 9.3 ppm | 97.8% reduction w/CA membrane | | |
| III G-11 | Nickel | B | P | 12.5 ppm | 92.8% reduction w/C-PEI membrane @ pH=8.0. | See IIIG-4 for comments. | 18 |
| | | | | 12.5 ppm | 97.6% reduction w/C-PEI membrane @ pH=11.0. | | |
| III G-12 | Zinc | B | P | 12.5 ppm | 96.6% reduction w/C-PEI membrane @ pH=8.0. | See IIIG-1 for comments. | 18 |
| | | | | 12.5 ppm | 100% reduction w/C-PEI membrane @ pH=11.0. | | |
| III G-13 | Zinc | B | P | 9.4 ppm | 96.9% reduction w/CA membrane | See IIIG-1 for comments. | 18 |
| | | | | 10.0 ppm | 98.6% reduction w/CA membrane | | |
| | | | | 31.4 ppm | 98.8% reduction w/CA membrane | | |
| | | | | 32.8 ppm | 99.5% reduction w/CA membrane | | |

(continued)

TABLE E-1 (continued)

Concentration Process: Reverse Osmosis (III)
Chemical Classification: Pesticides (J)

| No.[a] | Chemical[b] | Description of Study: Study Type[c] | Waste Type[d] | Influent Char. | Results of Study | Comments | Ref. |
|---|---|---|---|---|---|---|---|
| III J-1 | Aldrin | B | P | 142 µg | 100% reduction w/CA membrane 100% reduction w/C-PEI membrane. | CA & C-PEI membranes operated at 600 psig & room temperature. | 18 |
| III J-2 | Atrazine | B | P | 1102 µg | 84% reduction w/CA membrane 97.8% reduction w/C-PEI membrane. | See IIIJ-1 for comments. | 18 |
| III J-3 | Captan | B | P | 689 µg | 98.8% reduction w/CA membrane 100% reduction w/C-PEI membrane. | See IIIJ-1 for comments. | 18 |
| III J-4 | DDE | B | P | 69 µg | 100% reduction w/CA membrane 100% reduction w/C-PEI membrane. | See IIIJ-1 for comments. | 18 |
| III J-5 | DDT | B | P | 42 µg | 100% reduction w/CA membrane 100% reduction w/C-PEI membrane. | See IIIJ-1 for comments. | 18 |
| III J-6 | Diazinon | B | P | 474 µg | 98.3% reduction w/CA membrane 88.1% reduction w/C-PEI membrane. | See IIIJ-1 for comments. | 18 |
| III J-7 | Dieldrin | B | P | 321 µg | 99.9% reduction w/CA membrane 100% reduction w/C-PEI membrane. | See IIIJ-1 for comments. | 18 |
| III J-8 | Heptachlor | B | P | 145 µg | 100% reduction w/CA & C-PEI membranes. | See IIIJ-1 for comments. | 18 |
| III J-9 | Heptachlor-epoxide | B | P | 307 µg | 99.8% reduction w/CA & C-PEI membranes. | See IIIJ-1 for comments. | 18 |
| III J-10 | Lindane | B | P | 506 µg | 99.5% reduction w/CA membrane 99.0% reduction w/C-PEI membrane. | See IIIJ-1 for comments. | 18 |

(continued)

TABLE E-1 (continued)

Concentration Process: Reverse Osmosis (III)
Chemical Classification: Pesticides (J)

| No.[a] | Chemical[b] | Description of Study | | | Results of Study | Comments | Ref. |
|---|---|---|---|---|---|---|---|
| | | Study Type[c] | Waste Type[d] | Influent Char. | | | |
| III J-11 | Malathion | B | P | 1058 µg | 99.2% reduction w/CA membrane 99.7% reduction w/C-PEI membrane. | See IIIJ-1 for comments. | 18 |
| III J-12 | Methyl Parathion | B | P | 913 µg | 99.6% reduction w/CA & C-PEI membranes. | See IIIJ-1 for comments. | 18 |
| III J-13 | Parathion | B | P | 747 µg | 99.9% reduction w/CA membrane 99.8% reduction w/C-PEI membrane. | See IIIJ-1 for comments. | 18 |
| III J-14 | Randox | B | P | 327 µg | 72% reduction w/CA membrane 98.6% reduction w/C-PEI membrane. | See IIIJ-1 for comments. | 18 |
| III J-15 | Trifluralin | B | P | 1579 µg | 99.7% reduction w/CA membrane 100% reduction w/C-PEI membrane. | See IIIJ-1 for comments. | 18 |

(continued)

TABLE E-1 (continued)

Concentration Process: Reverse Osmosis (III)
Chemical Classification: Phenols (K)

| No.[a] | Chemical[b] | Description of Study: Study Type[c] | Waste Type[d] | Influent Char. | Results of Study | Comments | Ref. |
|---|---|---|---|---|---|---|---|
| III K-1 | 2-Chlorophenol | R | U | | 66.3% reduction. | | 90 |
| III K-2 | 4-Nitrophenol | R | U | | Removable by reverse osmosis. | | 90 |
| III K-3 | Phenol | R | U | | 17.8% reduction. | | 90 |
| III K-4 | Phenol | B | P | 1000 ppm | -5.7% reduction w/CA membrane 76.5% reduction w/C-PEI membrane. | | 18 |
| III K-5 | Phenol | P | S | 1-100mg/l each of phenol, resorcinol, o-cresol, catechol | In excess of 90% separation at pH 8-10 w/optimum at pH 9 at flux rate of about 70 gpd/ft$^2$. Results indicate that hyperfiltration (reverse osmosis) produced higher rejection & flux rates than ultrafiltration. Increasing pressure improves rejection slightly & flux rate greatly. Increasing pH increased rejection w/little effect on flux rate. Conc. had little effect on either rejection or flux rate. | Size: 60-130 gpd/ft$^2$ flux. Duration: 0-60hrs Pressure: 250-950 psig. Velocity: 15 fps. Membranes: Hydrous Zr (IV) oxide-PAA membrane on carbon stainless steel & selas support. | 54 |

(continued)

TABLE E-1 (continued)

Concentration Process: Ultrafiltration (IV)
Chemical Classification: Aromatics (D)

| No.[a] | Chemical[b] | Description of Study: Study Type[c] | Waste Type[d] | Influent Char. | Results of Study | Comments | Ref. |
|---|---|---|---|---|---|---|---|
| IV D-1 | TNT (accounted for 90% of TOC) | L,C | I+P | 20 ppm TOC @ pH=11.0 | 80% TOC reduction by PSAL (Millipore) noncellulose membrane. | TDS conc. was 1200 ppm. Average pressure: 25-60 psi. Estimated cost for full scale operation was $1.85/1000 gal | 10 |
| | | | | 200 ppm TOC @ pH=11.0 | 93% TOC reduction by PSAL (Millipore) noncellulose membrane. | | |

(continued)

TABLE E-1 (continued)

Concentration Process: Ultrafiltration (IV)
Chemical Classification: Metals (G)

| No.[a] | Chemical[b] | Description of Study | | | Results of Study | Comments | Ref. |
|---|---|---|---|---|---|---|---|
| | | Study Type[c] | Waste Type[d] | Influent Char. | | | |
| IV G-1 | Copper | C,P | I | 0.44 ppm | 0.08 ppm effluent conc. | | 59 |
| IV G-2 | Iron | C,P | I | 6.8 ppm | 1.0 ppm effluent conc. | | 59 |
| IV G-3 | Manganese | C,P | I | 4.9 ppm | 0.52 ppm effluent conc. | | 59 |
| IV G-4 | Zinc | C,P | I | 1.8 ppm | 0.38 ppm effluent conc. | | 59 |

(continued)

TABLE E-1 (continued)

Concentration Process: Ultrafiltration (IV)
Chemical Classification: Phenols (K)

| No.[a] | Chemical[b] | Description of Study | | | Results of Study | Comments | Ref. |
|---|---|---|---|---|---|---|---|
| | | Study Type[c] | Waste Type[d] | Influent Char. | | | |
| IV K-1 | Phenols | P | S | 1-100 ppm each of phenol, resorcinol, o-cresol, catechol | Maximum rejection was 75% at pH 10; rejection increased as pH increased. Ionic state of solute rather than membrane material controlled rejection rate. Increased temp resulted in increased flux rate but rejection rate was only slightly affected. Solute rejection was not affected by length of operating time. | Size: 30-160 gpd/ft$^2$ flux. Duration: 0-200hr Pressure: 200 psig. Velocity: 15 fps Temp: 25-55$^{o}$C Hydrous Zr(IV) oxide, silicate membranes. | 54 |

(continued)

TABLE E-1 (continued)

Concentration Process: Stripping (V)
Chemical Classification: Aliphatics (B)

| No.[a] | Chemical[b] | Description of Study | | | Results of Study | Comments | Ref. |
|---|---|---|---|---|---|---|---|
| | | Study Type[c] | Waste Type[d] | Influent Char. | | | |
| VB-1 | Acrylonitrile | R | U | | Flash vaporization from water by high pressure discharge. | | 90 |

(continued)

TABLE E-1 (continued)

Concentration Process: Stripping (V)
Chemical Classification: Aromatics (D)

| No.[a] | Chemical[b] | Description of Study: Study Type[c] | Waste Type[d] | Influent Char. | Results of Study | Comments | Ref. |
|---|---|---|---|---|---|---|---|
| VD-1 | Benzene | R | U | | Air & steam strippable. | | 90 |
| VD-2 | Benzene | C,P | S | 0.13 gpm flow | 95-99% reduction by steam stripping. | Estimated cost of $3.35/1000 gal based on 0.03 MGD | 13 |
| VD-3 | Chlorobenzene | R | U | | Steam strippable. | | 90 |
| VD-4 | Chlorobenzene | F,C | D | 0.66 $M^3/s$ flow | 60% reduction by air stripping. | | 64 |
| VD-5 | m-Dichlorobenzene o- | R | U | | Air & steam strippable. | | 90 |
| VD-6 | p-Dichlorobenzene | R | U | | Steam strippable. | | 90 |
| VD-7 | 1,2-Dichlorobenzene | F,C | D | 0.66 $M^3/s$ flow | 70% reduction by air stripping. | | 64 |
| VD-8 | 1,3-Dichlorobenzene | F,C | D | 0.66 $M^3/s$ flow | 80% reduction by air stripping. | | 64 |
| VD-9 | 1,4-Dichlorobenzene | F,C | D | 0.66 $M^3/s$ flow | 90% reduction by air stripping. | | 64 |
| VD-10 | Ethylbenzene | F,C | D | 0.66 $M^3/s$ flow | 80% reduction by air stripping. | | 64 |
| VD-11 | Ethylbenzene | R | U | | Air & steam strippable. | | 90 |
| VD-12 | Ethylbenzene | P,C | S | 0.13 gpm flow | 86-93% reduction by steam stripping. | See VD-2 for comments. | 13 |
| VD-13 | Hexachlorobenzene | R | U | | Steam strippable. | | 64 |

(continued)

TABLE E-1 (continued)

Concentration Process: Stripping (V)
Chemical Classification: Aromatics (D)

| No.[a] | Chemical[b] | Description of Study: Study Type[c] | Waste Type[d] | Influent Char. | Results of Study | Comments | Ref. |
|---|---|---|---|---|---|---|---|
| VD-14 | Nitrobenzene | R | U | 450-2160 ppm | Steam strippable. | | 64 |
| VD-15 | Styrene | P,C | S | 0.13 gpm flow | 98-99% reduction by steam stripping. | See VD-2 for comments. | 13 |
| VD-16 | Toluene | P,C | S | 0.13 gpm flow | 73-92% reduction | See VD-2 for comments. | 13 |
| VD-17 | Toluene | R | U | | Air & steam strippable. | | 90 |
| VD-18 | 1,2,4-Trichlorobenzene | F,C | D | 0.66 $M^3/s$ | 50% reduction by air stripping. | | 64 |
| VD-19 | 1,2,4-Trichlorobenzene | R | U | | Steam strippable. | | 90 |

(continued)

TABLE E-1 (continued)

Concentration Process: Stripping (V)
Chemical Classification: Halocarbons (F)

| No.[a] | Chemical[b] | Description of Study: Study Type[c] | Waste Type[d] | Influent Char. | Results of Study | Comments | Ref. |
|---|---|---|---|---|---|---|---|
| VF-1 | Bromodichloromethane | R | U | | Air & steam strippable. | | 90 |
| VF-2 | Bromomethane | R | U | | Air strippable. | Gas at STP | 90 |
| VF-3 | Chloral | P,C | I | 693.2 ppm @ 250ml/min feed rate | Overhead flow (% of feed) / Overhead Conc. (ppm) / Bottom Conc. (ppm)<br>2.3 / 1213.0 / 171.9<br>2.8 / 1163.6 / 177.1<br>5.1 / 1185.5 / 172.6<br>2.3 with 1.4:1 reflux to overhead ratio / 2332.3 / 464.3<br>2.5 with 0.9:1 reflux to overhead ratio / 2301.6 / 434.4 | Water quality:<br>TOC - 9022 ppm<br>COD - 15100 ppm<br>pH - 0.1<br>acidity - 102312 ppm<br>Cl-116,127 ppm<br>Numerous other halogens present. | 95 |
| VF-4 | Chloroethane | R | U | | 90% evaporation from $H_2O$-79 min with air stripping. | | 90 |
| VF-5 | Chloroethylene | R | U | | Air strippable | Gas at STP | 90 |
| VF-6 | Chloroform | P,C | I | 140.3 ppm @ 250ml/min feed rate | Overhead flow (% of feed) / Overhead Conc. (ppm) / Bottom Conc. (ppm)<br>2.3 / 1185.1 / 0<br>2.8 / 882.4 / 0<br>5.1 / 838.3 / 0 | See VF-3 for comments. | 95 |

(continued)

TABLE E-1 (continued)

Concentration Process: Stripping (V)
Chemical Classification: Halocarbons (F)

| No.[a] | Chemical[b] | Description of Study: Study Type[c] | Waste Type[d] | Influent Char. | Results of Study | | | Comments | Ref. |
|---|---|---|---|---|---|---|---|---|---|
| VF-6 cont | | | | | Overhead flow (% of feed) | Overhead Conc. (ppm) | Bottom Conc. (ppm) | | |
| | | | | | 2.3 with 1.4:1 reflux to overhead ratio | 412.3 | 0 | | |
| | | | | | 2.5 with 1.4:1 reflux to overhead ratio | 1124.3 | 64.7 | | |
| VF-7 | Chloromethane | R | U | | Air strippable. | | | Gas at STP | 90 |
| VF-8 | Dibromochloromethane | R | U | | Air & steam strippable. | | | | 90 |
| VF-9 | 1,1-Dichloroethane | R | U | | 90% evaporation from $H_2O$ - 109 min with air stripping. | | | | 90 |
| VF-10 | 1,2-Dichloroethane | R | U | | Air & steam strippable. | | | | 90 |

(continued)

TABLE E-1 (continued)

Concentration Process: Stripping (V)
Chemical Classification: Halocarbons (F)

| No.[a] | Chemical[b] | Description of Study: Study Type[c] | Waste Type[d] | Influent Char. | Results of Study | | | Comments | Ref. |
|---|---|---|---|---|---|---|---|---|---|
| VF-11 | 1,2-Dichloroethane | P,C | I | 1583.3ppm @ 250 ml/min feed rate | Overhead flow (% of feed) | Overhead Conc. (ppm) | Bottom Conc. (ppm) | See VF-3 for comments. | 95 |
| | | | | | 2.3 | 350.8 | 373.7 | | |
| | | | | | 2.8 | 269.7 | 1255.4 | | |
| | | | | | 5.1 | 465.0 | 14.8 | | |
| | | | | | 2.3 with 1.4:1 reflux to overhead ratio | 1320.9 | 16.1 | | |
| | | | | | 2.5 with 0.9:1 reflux to overhead ratio | 679.9 | 0 | | |
| VF-12 | 1,1-Dichloroethylene | R | U | | Air & steam strippable. | | | | 90 |
| VF-13 | 1,2-trans-Dichloroethylene | R | U | | 90% evaporation from $H_2O$ - 83 min with air stripping. | | | | 90 |
| VF-14 | 1,1-Dichloroethylene | P,C | I | 61.5 ppm @ 250 ml/min feed rate | Overhead flow (% of feed) | Overhead Conc. (ppm) | Bottom Conc. (ppm) | See VF-3 for comments. | 95 |
| | | | | | 2.3 | 124.4 | 32.8 | | |
| | | | | | 5.1 | 111.2 | 0 | | |
| | | | | | 2.5 with 0.9:1 reflux to overhead ratio | 179.9 | 0 | | |

(continued)

TABLE E-1 (continued)

Concentration Process: Stripping (V)
Chemical Classification: Halocarbons (F)

| No.[a] | Chemical[b] | Description of Study: Study Type[c] | Waste Type[d] | Influent Char. | Results of Study | | | Comments | Ref. |
|---|---|---|---|---|---|---|---|---|---|
| VF-15 | Dichloromethane | P,C | I | 800.9 ppm @ 250 ml/min feed rate | Overhead flow (% of feed) | Overhead Conc. (ppm) | Bottom Conc. (ppm) | See VF-3 for comments. | 95 |
| | | | | | 2.3 | 3511.8 | 114.1 | | |
| | | | | | 2.8 | 3277.0 | 89.5 | | |
| | | | | | 5.1 | 2736.5 | 175.6 | | |
| | | | | | 2.3 with 1.4:1 reflux to overhead ratio | 1183.0 | 296.3 | | |
| | | | | | 2.5 with 0.9:1 reflux to overhead ratio | 5159.9 | 131.7 | | |

(continued)

TABLE E-1(continued)

Concentration Process: Stripping (V)
Chemical Classification: Halocarbons (F)

| No.[a] | Chemical[b] | Description of Study: Study Type[c] | Waste Type[d] | Influent Char. | Results of Study | | | Comments | Ref. |
|---|---|---|---|---|---|---|---|---|---|
| VF-16 | Dichloromethane | R | U | | 90% evaporation from $H_2O$-60 min with air stripping. | | | | 90 |
| VF-17 | 1,2-Dichloropropane | R | U | | Air & steam strippable. | | | | 90 |
| VF-18 | 1,2-Dichloropropylene | R | U | | Air & steam strippable. | | | | 90 |
| VF-19 | Ethylene Dichloride | P,C | I | 1593 ppm @ 250ml/min feed rate | Overhead flow (% of feed) | Overhead Conc. (ppm) | Bottom Conc. (ppm) | See VF-3 for comments. | 95 |
| | | | | | 2.3 | 4383.5 | 42.2 | | |
| | | | | | 2.8 | 4105.5 | 64.5 | | |
| | | | | | 5.1 | 4731.5 | 43.1 | | |
| | | | | | 2.3 with 1.4:1 reflux to overhead flow | 3654.5 | 38.6 | | |
| | | | | | 2.5 with 0.9:1 reflux to overhead ratio | 5541.3 | 436.4 | | |

(continued)

TABLE E-1 (continued)

Concentration Process: Stripping (V)
Chemical Classification: Halocarbons (F)

| No.[a] | Chemical[b] | Description of Study: Study Type[c] | Waste Type[d] | Influent Char. | Results of Study | | | Comments | Ref. |
|---|---|---|---|---|---|---|---|---|---|
| VF-20 | Ethylene Dichloride | P,C | I | Average conc. of 4512 ppm @ ave. feed rate of 325ml/min | Average Overhead flow (ml/min) | Average Overhead Conc. (ppm) | Average Bottom Conc. (ppm) | Wastewater quality: COD - 615 ppm TC - 1703 ppm pH - 11.2 Alkalinity - 4840 ppm Cl - 6564 ppm | 95 |
| | | | | | 20.8 | 21.6 | 20.3 | | |
| VF-21 | Ethylene Dichloride | P,C | I | 8700 ppm @ 10 gpm flow rate | 99% reduction with average stripping tower temperature of 221°F. | | | | 66 |
| VF-22 | Hexachloro-butadiene | R | U | | Air & steam strippable. | | | | 90 |
| VF-23 | Hexachloro-cyclopenta-diene | R | U | | Polymerizes with heat. | | | | 90 |
| VF-24 | Perchloro-ethylene | P,C | I | 14.9 ppm @ 250ml/min feed rate | Overhead flow (% of feed) | Overhead Conc. (ppm) | Bottom Conc. (ppm) | See VF-3 for comments. | 95 |
| | | | | | 2.3 | Not reported | 6.8 | | |
| | | | | | 2.8 | 50.2 | 0 | | |
| | | | | | 2.5 with 0.9:1 reflux to overhead ratio | 9.6 | 0 | | |
| VF-[illegible] | [illegible]1,1,2-Tetra-[illegible]loroethane | P,C | I | 512.8ppm @ 250ml/min feed rate | Overhead flow (% of feed) | Overhead Conc. (ppm) | Bottom Conc. (ppm) | See VF-3 for comments. | 95 |
| | | | | | 2.3 | 189.8 | 0 | | |
| | | | | | 2.8 | 393.8 | 0.84 | | |

(continued)

TABLE E-1 (continued)

Concentration Process: Stripping (V)
Chemical Classification: Halocarbons (F)

| No.[a] | Chemical[b] | Description of Study: Study Type[c] | Waste Type[d] | Influent Char. | Results of Study | | | Comments | Ref. |
|---|---|---|---|---|---|---|---|---|---|
| VF-25 cont | | | | | Overhead flow (% of feed) | Overhead Conc. (ppm) | Bottom Conc. (ppm) | | |
| | | | | | 5.1 | 22.7 | 0 | | |
| | | | | | 2.3 with 1.4:1 reflux to overhead ratio | 25.8 | 0.5 | | |
| | | | | | 2.5 with 0.9:1 reflux to overhead ratio | 392.5 | 1.6 | | |
| VF-26 | 1,1,2,2-Tetrachloroethane | P,C | I | 14.9 ppm @ 250ml/min feed rate | Overhead flow (% of feed) | Overhead Conc. (ppm) | Bottom Conc. (ppm) | See VF-3 for comments. | 95 |
| | | | | | 2.3 | 14.9 | 32.7 | | |
| | | | | | 2.8 | 121.7 | 49.5 | | |
| | | | | | 5.1 | 444.4 | 78.4 | | |
| | | | | | 2.3 with 1.4:1 reflux to overhead ratio | 8.7 | 0 | | |
| | | | | | 2.5 with 0.9:1 reflux to overhead ratio | 24.2 | 0.1 | | |

(continued)

TABLE E-1 (continued)

Concentration Process: Stripping (V)
Chemical Classification: Halocarbons (F)

| No.[a] | Chemical[b] | Description of Study: Study Type[c] | Waste Type[d] | Influent Char. | Results of Study | | | Comments | Ref. |
|---|---|---|---|---|---|---|---|---|---|
| VF-27 | Tetrachloroethylene | R | U | | Air & steam strippable, 90% evaporation from $H_2O$ - 72 min | | | | 90 |
| VF-28 | Tetrachloromethane | R | U | | Air & steam strippable, 90% evaporation from $H_2O$ - 97 min | | | | 90 |
| VF-29 | Tribromomethane | R | U | | Air & steam strippable. | | | | 90 |
| VF-30 | 1,1,1-Trichloroethane | R | U | | Air & steam strippable. | | | | 90 |
| VF-31 | 1,1,1-Trichloroethane | P,C | I | 50.92 ppm @ 250 ml/min feed rate | Overhead flow (% of feed) | Overhead Conc. (ppm) | Bottom Conc. (ppm) | See VF-3 for comments. | 95 |
| | | | | | 2.5 with 0.9:1 reflux to overhead ratio | 173.4 | 41.6 | | |
| VF-32 | 1,1,2-Trichloroethane | R | U | | Air & steam strippable, 90% evaporation from $H_2O$- 102 min | | | | 90 |
| VF-33 | 1,1,2-Trichloroethane | P,C | I | 14.14 ppm @ 250 ml/min feed rate | Overhead flow (% of feed) | Overhead Conc. (ppm) | Bottom Conc. (ppm) | See VF-3 for comments. | 95 |
| | | | | | 2.3 | 24.6 | 0.19 | | |
| | | | | | 2.8 | 34.0 | 0 | | |
| | | | | | 5.1 | 76.5 | 0 | | |
| | | | | | 2.3 with 1.4:1 reflux to overhead ratio | 42.4 | 0 | | |

(continued)

TABLE E-1 (continued)

Concentration Process: Stripping (V)
Chemical Classification: Halocarbons (F)

| No.[a] | Chemical[b] | Description of Study: Study Type[c] | Waste Type[d] | Influent Char. | Results of Study | | | Comments | Ref. |
|---|---|---|---|---|---|---|---|---|---|
| VF-33 cont | | | | | Overhead flow (% of feed) | Overhead Conc. (ppm) | Bottom Conc. (ppm) | | |
| | | | | | 2.5 with 0.9:1 reflux to overhead ratio | 66.1 | 0 | | |
| VF-34 | Trichloroethylene | R | U | | Air & steam strippable, 90% evaporation from $H_2O$-63 min. | | | | 90 |
| VF-35 | Trichloroethylene | P,C | I | 250ml/min feed rate | Overhead flow (% of feed) | Overhead Conc. (ppm) | Bottom Conc. (ppm) | See VF-3 for comments. | 95 |
| | | | | | 2.3 | 640.8 | 34.2 | | |
| | | | | | 2.8 | 567.0 | 0 | | |
| | | | | | 5.1 | 627.4 | 22.7 | | |
| | | | | | 2.3 with 1.4:1 reflux to overhead ratio | 640.8 | 37.2 | | |
| | | | | | 2.5 with 0.9:1 reflux to overhead ratio | 644.5 | 0 | | |
| VF-35 | Trichloromethane | R | U | | Air & steam strippable, 90% evaporation from $H_2O$-62 min. | | | | 90 |

(continued)

TABLE E-1(continued)

Concentration Process: Stripping (V)
Chemical Classification: Phenols (K)

| No.[a] | Chemical[b] | Description of Study | | | Results of Study | Comments | Ref. |
|---|---|---|---|---|---|---|---|
| | | Study Type[c] | Waste Type[d] | Influent Char. | | | |
| VK-1 | Phenol | R | U | | Steam strippable. | | 90 |
| VK-2 | Chlorophenol | R | U | | Steam strippable. | | 90 |

(continued)

TABLE E-1 (continued)

Concentration Process: Stripping (V)
Chemical Classification: Polynuclear Aromatic (M)

| No.[a] | Chemical[b] | Description of Study | | | Results of Study | Comments | Ref. |
|---|---|---|---|---|---|---|---|
| | | Study Type[c] | Waste Type[d] | Influent Char. | | | |
| VM-1 | Naphthalene | R | U | | Air stripping by 50:1 volumes of air. | | 90 |

(continued)

TABLE E-1 (continued)

Concentration Process: Solvent Extraction (VII)
Chemical Classification: Alcohols (A)

| No.[a] | Chemical[b] | Description of Study | | | Results of Study | Comments | Ref. |
|---|---|---|---|---|---|---|---|
| | | Study Type[c] | Waste Type[d] | Influent Char. | | | |
| VII A-1 | Ethanol | L,C | I | 286 ppm | 7% reduction. | Extraction of neutralized oxychlorination wastewater using 2-ethyl hexanol (S/W=0.106); RDC extractor used. | 27 |

(continued)

TABLE E-1 (continued)

Concentration Process: Solvent Extraction (VII)
Chemical Classification: Aliphatics (B)

| No.[a] | Chemical[b] | Description of Study | | | Results of Study | Comments | Ref. |
|---|---|---|---|---|---|---|---|
| | | Study Type[c] | Waste Type[d] | Influent Char. | | | |
| VII B-1 | Acrolein | R | U | | Extractable w/xylene. Solvent recovery by azeotropic distillation. | | 90 |
| VII B-2 | Acrylonitrile | R | U | | Extractable w/ethyl ether. | | 90 |
| VII B-3 | Isophorone | R | U | | Extractable w/ethyl ether. | | 90 |
| VII B-4 | Methyl Ethyl Ketone | L,C | I | 12200ppm @ 3.21 gal/hr | 69% reduction. | Sequential extraction of waste water from lube-oil refining using butyl acetate (S/W=0.10) & isobutylene (S/W=0.101); RDC extractor used. | 27 |
| VII B-5 | Methyl Ethyl Ketone | L,C | I | 12200ppm @ 3.21 gal/hr | 88% reduction. | Sequential extraction of waste water from lube-oil refining using butyl acetate (S/W=0.10) & isobutylene (S/W=0.101); RDC extractor used. | 27 |

(continued)

TABLE E-1 (continued)

Concentration Process: Solvent Extraction (VII)
Chemical Classification: Aromatics (D)

| No.[a] | Chemical[b] | Description of Study: Study Type[c] | Waste Type[d] | Influent Char. | Results of Study | Comments | Ref. |
|---|---|---|---|---|---|---|---|
| VII D-1 | Benzene | R | U | | Extractable w/suitable solvent. | | 90 |
| VII D-2 | Benzene | L,C | I | 290 ppm @ 3 gal/hr | 97% reduction. | Extraction of wastewater from styrene manufacture using isobutylne (S/W=0.107); RDC extractor used. | 27 |
| VII D-3 | Benzene | L,C | I | 71 ppm @ 4.6 gal/hr | 96% reduction. | Extraction of ethylene quench wastewater using isobutylene (S/W=0.101) RDC extractor used. | 27 |
| VII D-4 | Benzene | L,C | I | 81 ppm @ 4.6 gal/hr | 97% reduction. | Extraction of ethylene quench wastewater using isobutane (S/W=0.097); RDC extractor used. | 27 |
| VII D-5 | Chlorobenzene | R | U | 600 ppm | 3 ppm effluent conc. using chloroform solvent. | | 90 |
| VII D-6 | o-Dichlorobenzene m- p- | R | U | | Extractable w/suitable solvent. | | 90 |
| VII D-7 | 2,4-Dinitrotoluene | R | U | | Extractable w/suitable solvent. | | 90 |
| | 2,6-Dinitrotoluene | R | U | | Extractable w/suitable solvent. | | 90 |

(continued)

TABLE E-1 (continued)

Concentration Process: Solvent Extraction (VII)
Chemical Classification: Aromatics (D)

| No.[a] | Chemical[b] | Description of Study: Study Type[c] | Waste Type[d] | Influent Char. | Results of Study | Comments | Ref. |
|---|---|---|---|---|---|---|---|
| VII D-9 | Ethylbenzene | L,C | I | | 97% reduction. | See VIID-2 for comments. | 27 |
| VII D-10 | Ethylbenzene | R | U | | Extractable w/suitable solvent. | | 90 |
| VII D-11 | Hexachloro-benzene | R | U | | Extractable w/suitable solvent. | | 90 |
| VII D-12 | Nitrobenzene | R | U | | Extractable w/suitable solvent. | | 90 |
| VII D-13 | Styrene | L,C | I | | >93% reduction. | See VIID-2 for comments. | 27 |
| VII D-14 | Toluene | R | U | | Extractable w/suitable solvent. | | 90 |
| VII D-15 | Toluene | L,C | I | 41-44ppm @ 4.6 gal/hr | 94%-96% reduction. | See VIID-3 & 4 for comments. | 27 |
| VII D-16 | 1,2,4-Tri-chlorobenzene | R | U | | Extractable w/suitable solvent. | | 90 |
| VII D-17 | Xylene | L,C | I | | >97% reduction. | See VIID-3 for comments. | 27 |
| VII D- | Xylene | L,C | I | | >97% reduction. | See VIID-4 for comments. | 27 |

(continued)

TABLE E-1 (continued)

Concentration Process: Solvent Extraction (VII)
Chemical Classification: Ethers (E)

| No.[a] | Chemical[b] | Description of Study | | | Results of Study | Comments | Ref. |
|---|---|---|---|---|---|---|---|
| | | Study Type[c] | Waste Type[d] | Influent Char. | | | |
| VII E-1 | bis-Chloro-ethyl Ether | R | U | | Extractable w/ethyl ether & benzene. | | 90 |
| VII E-2 | bis-Chloro-isopropyl Ether | R | U | | Extractable w/ethyl ether & benzene. | | 90 |

(continued)

TABLE E-1 (continued)

Concentration Process: Solvent Extraction (VII)
Chemical Classification: Halocarbons (F)

| No.[a] | Chemical[b] | Description of Study: Study Type[c] | Waste Type[d] | Influent Char. | Results of Study | Comments | Ref. |
|---|---|---|---|---|---|---|---|
| VII F-1 | Bromodichloromethane | R | U | | Soluble in most organics. | | 90 |
| VII F-2 | Bromomethane | R | U | | Soluble in most organics. | | 90 |
| VII F-3 | Chloral Hydrate | L,C | I | 15200 ppm | 49% reduction. | Extraction of neutralized oxychlorination wastewater using 2-ethylhexanol (S/W=0.106) RDC extractor used. | 27 |
| VII F-4 | Chloroethane | R | U | | Extractable w/alcohols and aromatics. | | 90 |
| VII F-5 | Chloroethylene | R | U | | Soluble in most organics. | | 90 |
| VII F-6 | Chloromethane | R | U | | Soluble in most organics. | | 90 |
| VII F-7 | Dibromochloromethane | R | U | | Extractable w/organics, ethers and alcohols. | | 90 |
| VII F-8 | Dichlorodifluoromethane | R | U | | Extractable w/organics, ethers and alcohols. | | 90 |
| VII F-9 | 1,1-Dichloroethane | R | U | | Extractable w/alcohols and aromatics. | | 90 |

(continued)

TABLE E-1 (continued)

Concentration Process: Solvent Extraction (VII)
Chemical Classification: Halocarbons (F)

| No.[a] | Chemical[b] | Description of Study: Study Type[c] | Waste Type[d] | Influent Char. | Results of Study | Comments | Ref. |
|---|---|---|---|---|---|---|---|
| VII F-10 | 1,2-Dichloroethane | R | U | | Extractable w/alcohols and aromatics. | | 90 |
| VII F-11 | Dichloroethylene | L,B | I | 49 ppm | Kerosene effluent conc. - 2 ppm; $C_{10}$-$C_{12}$ effluent conc. - 1 + ppm | Solvent extraction used separatory funnel w/kerosene & $C_{10}$-$C_{12}$ hydrocarbon solvents at 7:1 solvent to wastewater ratio. | 95 |
| VII F-12 | Dichloroethylene | L,C | I | 1500 ppm | >99% reduction. | See VIIF-3 for comments. | 27 |
| VII F-13 | 1,1-Dichloroethylene | R | U | | Extractable w/alcohols, aromatics and ethers. | | 90 |
| VII F-14 | 1,2-trans-Dichloroethylene | R | U | | Soluble in most organics. | | 90 |
| VII F-15 | Dichloromethane | R | U | | Soluble in most organics. | | 90 |
| VII F-16 | 1,2-Dichloropropane | R | U | | Soluble in most organics. | | 90 |
| VII F-[illegible] | 1,2-Dichloropropylene | R | U | | Soluble in most organics. | | 90 |

(continued)

TABLE E-1 (continued)

Concentration Process: Solvent Extraction (VII)
Chemical Classification: Halocarbons (F)

| No.[a] | Chemical[b] | Description of Study: Study Type[c] | Waste Type[d] | Influent Char. | Results of Study | Comments | Ref. |
|---|---|---|---|---|---|---|---|
| VII F-18 | Ethyl Chloride | L,B | I | 3 ppm | Kerosene effluent conc. - 1 ppm; $C_{10}$-$C_{12}$ hydrocarbon effuent - 1 + ppm. | Solvent extraction used separatory funnel w/ kerosene & $C_{10}$-$C_{12}$ hydrocarbon solvents at 7:1 solvent to wastewater ratio. | 95 |
| VII F-19 | Ethylene Chlorohydrin | L,C | I | 1640 ppm | 21% reduction. | See VIIF-3 for comments. | 27 |
| VII F-20 | Ethylene Dichloride | L,B | I | 320 ppm | No detectable conc. in kerosene effluent; $C_{10}$-$C_{12}$ hydrocarbon effluent - 1 + ppm. | See VIIF-9 for comments. | 95 |
| VII F-21 | Ethylene Dichloride | P,C | I | 23-1804 ppm @ 2.76-3.76 l/min | A 5.5:1 water to solvent ratio gave 94-96% reduction. $C_{10}$-$C_{12}$ paraffin solvent at 5:1 to 16.5:1 water to solvent ratio showed 94-99% reduction | Wastewater contained other halocarbons including 30-350 ppm 1,1,2-trichloroethane and 5-197 ppm 1,1,2,2-tetrachloroethane. A 532 l/min extractor w/1000 ppm influent estimated to have a capital cost of $315,000 and total annual cost of $143,000 including credit for recovered EDC. | 95 |
| VII F-22 | Hexachlorobutadiene | R | U | | Soluble in most organics. | | 90 |
| VII F-23 | Hexachloroethane | R | U | | Extractable w/aromatics, alcohols and ethers | | 90 |

(continued)

TABLE E-1 (continued)

Concentration Process: Solvent Extraction (VII)
Chemical Classification: Halocarbons (F)

| No.[a] | Chemical[b] | Description of Study: Study Type[c] | Waste Type[d] | Influent Char. | Results of Study | Comments | Ref. |
|---|---|---|---|---|---|---|---|
| VII F-24 | Pentachloroethane | L,B | I | 10 ppm | Kerosene effluent conc. - 2 ppm; No detectable conc. in $C_{10}$-$C_{12}$ hydrocarbon effluent. | See VIIF-9 for comments. | 95 |
| VII F-25 | Perchloroethylene | L,B | I | 14 ppm | Kerosene effluent conc. - 2 ppm; $C_{10}$-$C_{12}$ hydrocarbon effluent conc. - 1 ppm. | See VIIF-9 for comments. | 95 |
| VII F-26 | Tetrachloroethane | L,B | I | 148 ppm | Kerosene effluent conc. - 7 ppm; $C_{10}$-$C_{12}$ hydrocarbon effluent conc. - 6 ppm. | See VIIF-9 for comments. | 95 |
| VII F-27 | 1,1,2,2-Tetrachloroethane | R | U | | Extractable w/aromatics, alcohols and ethers. | | 90 |
| VII F-28 | Tetrachloroethylene | R | U | | Soluble in most organics. | | 90 |
| VII F-29 | Tetrachloromethane | R | U | | Soluble in most organics. | | 90 |
| VII F-30 | Tribromomethane | R | U | | Soluble in most organics. | | 90 |
| VII F-31 | Trichloroethane | L,B | I | 75 ppm | Kerosene effluent conc. - 2 ppm; $C_{10}$-$C_{12}$ hydrocarbon effluent conc. - 1 ppm. | See VIIF-9 for comments. | 95 |
| VII F-32 | 1,1,1-Trichloroethane | R | U | | Extractable w/alcohols and aromatics. | | 90 |
| VII F-33 | 1,1,2-Trichloroethane | R | U | | Extractable w/aromatics, methanol and ethers. | | 90 |

(continued)

TABLE E-1 (continued)

Concentration Process: Solvent Extraction (VII)
Chemical Classification: Halocarbons (F)

| No.[a] | Chemical[b] | Description of Study: Study Type[c] | Waste Type[d] | Influent Char. | Results of Study | Comments | Ref. |
|---|---|---|---|---|---|---|---|
| VII F-34 | Trichloro-ethylene | L,B | I | 24 ppm | Kerosene effluent conc.- 6 ppm; $C_{10}$-$C_{12}$ hydrocarbon effluent conc. - 5 ppm. | See VIIF-9 for comments. | 95 |
| VII F-35 | Trichloro-ethylene | R | U | | Soluble in most organics. | | 90 |
| VII F-36 | Trichloro-fluoromethane | R | U | | Extractable w/alcohol, ether and organics. | | 90 |
| VII F-37 | Trichloro-methane | R | U | | Soluble in most organics. | | 90 |
| VII F-38 | Vinylidene Chloride | L,B | I | 13 ppm | Kerosene effluent conc. - 1 ppm; $C_{10}$-$C_{12}$ effluent conc. - 1 ppm. | See VIIF-9 for comments. | 95 |

(continued)

TABLE E-1 (continued)

Concentration Process: Solvent Extraction (VII)
Chemical Classification: Metals (G)

| No.[a] | Chemical[b] | Description of Study | | | Results of Study | Comments | Ref. |
|---|---|---|---|---|---|---|---|
| | | Study Type[c] | Waste Type[d] | Influent Char. | | | |
| VII G-1 | Mercury | R | U | 2 ppm | 99% reduction w/high molecular weight amines & quartenary salts. | | 90 |

(continued)

TABLE E-1 (continued)

Concentration Process: Solvent Extraction (VII)
Chemical Classification: Phenols (K)

| No.[a] | Chemical[b] | Description of Study: Study Type[c] | Waste Type[d] | Influent Char. | Results of Study | Comments | Ref. |
|---|---|---|---|---|---|---|---|
| VII K-1 | 4-Chloro-3-Methylphenol | | U | | Extractable w/benzene, alcohol and nitrobenzene | | 90 |
| VII K-2 | 2-Chlorophenol | R | U | | Extractable w/Diisopropyl-ether, benzene, butylacetate, and nitrobenzene | | 90 |
| VII K-3 | m-Cresol p- | L,C | I | 291 ppm | 91% reduction. | Extraction of evaporator condensate from spent caustic processing using isobutylene (S/W=1.8); spray extractor used. | 27 |
| VII K-4 | o-Cresol | L,C | I | 307 ppm | 90% reduction. | See VIIK-3 for comments. | 27 |
| VII K-5 | o-Cresol | L,C | I | 890 ppm @ 3.21 gal/hr | 99.9% reduction. | Sequential extraction of wastewater from lube-oil refining using butyl acetate (S/W=0.100) & isobutylene (S/W=0.101); RDC extractor used. | 27 |
| VII K-6 | o-Cresol | L,C | I | 890 ppm @ 3.21 gal/hr | 99.9% reduction. | Sequential extraction of wastewater from lube-oil refining using butyl acetate (S/W=0.30) & isobutylene (S/W=0.101): RDC extractor used. | 27 |

(continued)

TABLE E-1 (continued)

Concentration Process: Solvent Extraction (VII)
Chemical Classification: Phenols (K)

| No.[a] | Chemical[b] | Description of Study | | | Results of Study | Comments | Ref. |
|---|---|---|---|---|---|---|---|
| | | Study Type[c] | Waste Type[d] | Influent Char. | | | |
| VII K-7 | 2,4-Dichloro-phenol | R | U | | Extractable w/benzene, alcohol and nitrobenzene. | | 90 |
| VII K-8 | 2,4-Dimethyl-phenol | R | U | | Extractable w/benzene and alcohol. | | 90 |
| VII K-9 | 4,6-Dinitro-2-Methylphenol | R | U | | Extractable w/benzene and acetone. | | 90 |
| VII K-10 | 2,4-Dinitro-phenol | R | U | | Extractable w/benzene and alcohol. | | 90 |
| VII K-11 | 2-Nitrophenol | R | U | | Extractable w/benzene and alcohol. | | 90 |
| VII K-12 | 4-Nitrophenol | R | U | | Extractable w/benzene and alcohol. | | 90 |
| VII K-13 | Pentachloro-phenol | R | U | | Extractable w/benzene and alcohol and nitrobenzene. | | 90 |
| VII K-14 | Phenol | R | U | | Extractable w/diisopropyl-ether, benzene, butylacetate and nitrobenzene. | | 90 |
| VII K-15 | Phenol | L,C | I | 67 ppm @ 4.6 gal/hr | 6% reduction. | Extraction of ethylene quench wastewater using isobutylene (S/W=0.101); RDC extractor used. | 27 |

(continued)

TABLE E-1 (continued)

Concentration Process: Solvent Extraction (VII)
Chemical Classification: Phenols (K)

| No.[a] | Chemical[b] | Description of Study: Study Type[c] | Waste Type[d] | Influent Char. | Results of Study | Comments | Ref. |
|---|---|---|---|---|---|---|---|
| VII K-16 | Phenol | L,C | I | 69 ppm @ 4.6 gal/hr | 4% reduction. | Extraction of ethylene quench wastewater using isobutane (S/W=0.097); RDC extractor used. | 27 |
| VII K-17 | Phenol | L,C | I | 579 ppm | 72% reduction. | See VIIK-3 for comments. | 27 |
| VII K-18 | Phenol | L,C | I | 8800 ppm @ 3.21 gal/hr | 97% reduction | See VIIK-5 for comments. | 27 |
| VII K-19 | Phenol | L,C | I | 8800 ppm @ 3.21 gal/hr | 98% reduction. | See VIIK-7 for comments. | 27 |
| VII K-20 | 2,4,6-Trichlorophenol | R | U | | Extractable w/benzene, alcohol and nitrobenzene. | | 90 |
| VII K-21 | Xylenols | L,C | I | 227 ppm | 96% reduction. | See VIIK-3 for comments. | 27 |

(continued)

TABLE E-1 (continued)

Concentration Process: Solvent Extraction (VII)
Chemical Classification: Phthalates (L)

| No.[a] | Chemical[b] | Description of Study | | | Results of Study | Comments | Ref. |
|---|---|---|---|---|---|---|---|
| | | Study Type[c] | Waste Type[d] | Influent Char. | | | |
| VII L-1 | Bis (2-ethyl-hexyl) Phthalate | R | U | | Extractable w/ethyl ether & benzene. | | 90 |
| VII L-2 | Butylbenzyl Phthalate | R | U | | Extractable w/ethyl ether & benzene. | | 90 |
| VII L-3 | Di-N-Butyl Phthalate | R | U | | Extractable w/ethyl ether & benzene. | | 90 |
| VII L-4 | Diethyl Phthalate | R | U | | Extractable w/ethyl ether & benzene. | | 90 |
| VII L-5 | Dimethyl Phthalate | R | U | | Extractable w/ethyl ether & benzene. | | 90 |
| VII L-6 | Di-N-Octyl Phthalate | R | U | | Extractable w/ethyl ether & benzene. | | 90 |

(continued)

TABLE E-1 (continued)

Concentration Process: Solvent Extraction (VII)
Chemical Classification: Polynuclear Aromatics (M)

| No.[a] | Chemical[b] | Description of Study | | | Results of Study | Comments | Ref. |
|---|---|---|---|---|---|---|---|
| | | Study Type[c] | Waste Type[d] | Influent Char. | | | |
| VII M-1 | Anthracene | R | U | | Extractable w/toluene. | | 90 |

(continued)

TABLE E-1 CHEMICAL TREATABILITY

Concentration Process: Activated Carbon (IX)
Chemical Classification: Alcohols (A)

| No.[a] | Chemical[b] | Description of Study: Study Type[c] | Waste Type[d] | Influent Char. | Results of Study | Comments | Ref. |
|---|---|---|---|---|---|---|---|
| IX A-1 | Allyl Alcohol | I | P | 1000 ppm | 21.9% reduction; final conc. of 789 ppm; capacity was 0.024 gm/gm of carbon. Adsorbability found to increase with molecular weight. For compounds of <4 carbons order of decreasing adsorption was: undissociated organic acids, aldehydes, esters, ketones, alcohols (when >4 carbons, alcohols moved ahead of esters), glycols. Aromatics had greatest adsorption. Results of two component isotherm tests could be predicted from single compound tests; however, in four-component tests, only about 60% of predicted adsorption occurred. Continuous columns produced 60-80% of theoretical isotherm capacity. | Carbon dose was 5g/l Westvaco Nuchar | 35 |
| IX A-2 | n-Amyl Alcohol (1-Pentanol) | I | P | 1000 ppm | 71.8% reduction; 282 ppm final conc., 0.155 gm/gm carbon capacity. | See IXA-1 for additional results. | 35 |
| IX A-3 | Butanol | B,L | P | 100 ug/l | Complete removal. Desorption of alcohols from carbon by elutriating with various solvents ranged from 4 to 110%. | Filtrasorb 300 used. Solvents included pentane-acetone, diethyl ether, methylene chloride-acetone, methyl | 20 |

(continued)

TABLE E-1 (continued)

Concentration Process: Activated Carbon (IX)
Chemical Classification: Alcohols (A)

| No.[a] | Chemical[b] | Description of Study: Study Type[c] | Waste Type[d] | Influent Char. | Results of Study | Comments | Ref. |
|---|---|---|---|---|---|---|---|
| | | | | | | chloride-acetone, and acetone. | |
| IX A-4 | Butanol | I | P | 1000 ppm | 53.4% reduction; 466 ppm final conc., 0.107 gm/gm carbon capacity. | See IXA-1 for additional results. | 35 |
| IX A-5 | Butanol | I | P | 1000 ppm<br>500 ppm<br>100 ppm | 75% reduction<br>67% reduction<br>78% reduction | 24 hr. contact time; carbon does was 10 times chemical conc. | 72 |
| IX A-6 | t-Butanol | I | P | 1000 ppm | 29.5% reduction; 705 ppm final conc., 0.059 gm/gm carbon capacity. | See IXA-1 for additional results. | 35 |
| IX A-7 | Cyclohexanol | B,L | P | 100 µg/l | Complete removal. | See IXA-3 for additional results. | 20 |
| IX A-8 | Decanol | B,L | P | 100 µg/l | Complete removal. | See IXA-3 for additional results. | 20 |
| IX A-9 | Ethanol | I | P | 1000 ppm | 10% reduction; 901 ppm final conc., 0.020 gm/gm carbon capacity. | See IXA-1 for additional results. | 35 |
| IX A-10 | 2-Ethyl-Butanol | I | P | 1000 ppm | 85.5% reduction; 145 ppm final conc., 0.170 gm/gm carbon capacity. | See IXA-1 for additional results. | 35 |
| IX A-11 | 2-Ethyl-Hexanol | I | P | 700 ppm | 98.5% reduction; 10 ppm final conc., 0.138 gm/gm carbon capacity. | See IXA-1 for additional results. | 35 |
| IX A-12 | 2-Ethyl-1-Hexanol | B,L | P | 100 µg/l | Complete removal. | See IXA-3 for additional results. | 20 |

(continued)

TABLE E-1 (continued)

Concentration Process: Activated Carbon (IX)
Chemical Classification: Alcohols (A)

| No.[a] | Chemical[b] | Description of Study: Study Type[c] | Waste Type[d] | Influent Char. | Results of Study | Comments | Ref. |
|---|---|---|---|---|---|---|---|
| IX A-13 | m-Heptanol | B,L | P | 100 µg/l | Complete removal. | See IXA-3 for additional results. | 20 |
| IX A-14 | m-Hexanol | I | P | 1000 ppm | 95.5% reduction; 45 ppm final conc., 0.155 gm/gm carbon capacity. | See IXA-1 for additional results. | 35 |
| IX A-15 | Isobutanol | I | P | 1000 ppm | 41.9% reduction; 581 ppm final conc., 0.084 gm/gm carbon capacity. | See IXA-1 for additional results. | 35 |
| IX A-16 | Isopropanol | I | P | 1000 ppm | 12.6% reduction; 874 ppm final conc., 0.025 gm/gm carbon capacity. | See IXA-1 for additional results. | 35 |
| IX A-17 | Methanol | I | P | 1000 ppm | 3.6% reduction; 964 ppm final conc., 0.007 gm/gm carbon capacity. | See IXA-1 for additional results. | 35 |
| IX A-18 | Methanol | I | P | 1000 ppm<br>200 ppm<br>15 ppm | 17% reduction<br>33% reduction<br>33% reduction | 24 hr. contact time; carbon dose was 10 times chemical conc. | 72 |
| IX A-19 | Octanol | B,L | P | 100 µg/l | Complete removal. | See IXA-3 for additional results. | 20 |
| IX A-20 | Pentanol | B,L | P | 100 µg/l | Complete removal. | See IXA-3 for additional results. | 20 |
| IX A- | Propanol | B,L | P | 100 µg/l | Complete removal. | See IXA-3 for additional results. | 20 |
| | [illegible]panol | I | P | 1000 ppm | 18.9% reduction; 811 ppm final conc., 0.038 gm/gm carbon capacity. | See IXA-1 for additional results. | 35 |

(continued)

TABLE E-1 (continued)

Concentration Process: Activated Carbon (IX)
Chemical Classification: Aliphatics (B)

| No.[a] | Chemical[b] | Description of Study: Study Type[c] | Waste Type[d] | Influent Char. | Results of Study | Comments | Ref. |
|---|---|---|---|---|---|---|---|
| IX B-1 | Acetaldehyde | I | P | 1000 ppm | 11.9% reduction; 881 ppm final conc., 0.022 gm/gm carbon capacity. Adsorbability found to increase with molecular weight. For compounds of <4 carbons order of decreasing adsorption was: undissociated organic acids, aldehydes, esters, ketones, alcohols (when >4 carbons, alcohols moved ahead of esters), gylcols. Aromatics had greatest adsorption. Results of two-component isotherm tests could be predicted from single compound tests however, in four-component tests, only about 60% of predicted adsorption occurred. Continuous columns produced 60-80% of theoretical isotherm capacity. | Carbon dose was 5 g/l Westvaco Nuchar. | 35 |
| IX B-2 | Acetic Acid | I | P | 1000 ppm | 24% reduction; 760 ppm final conc., 0.048 gm/gm carbon capacity. | See IXB-1 for additional results. | 35 |
| IX B-3 | Acetone | I | P | 1000 ppm | 21.8% reduction; 782 ppm final conc., 0.043 gm/gm carbon capacity. | See IXB-1 for additional results. | 35 |
| IX B-4 | Acetone Cyanohydrin | I | P | 1000 ppm<br>200 ppm<br>100 ppm | 60% reduction<br>45% reduction<br>30% reduction | 24 hr. contact time; carbon dose was 10 times chemical conc. | 72 |

(continued)

TABLE E-1 (continued)

Concentration Process: Activated Carbon (IX)
Chemical Classification: Aliphatics (B)

| No.[a] | Chemical[b] | Description of Study: Study Type[c] | Waste Type[d] | Influent Char. | Results of Study | Comments | Ref. |
|---|---|---|---|---|---|---|---|
| IX B-5 | Acrolein | I | P | 1000 ppm | 30.6% reduction; 694 ppm final conc., 0.061 gm/gm carbon capacity. | See IXB-1 for additional results. | 35 |
| IX B-6 | Acrolein | R | U | 1000 ppm | 30% reduction at 0.5% carbon dose. | | 90 |
| IX B-7 | Acrylic Acid | I | P | 1000 ppm | 64.5% reduction; 355 ppm final conc., 0.129 gm/gm carbon capacity. | See IXB-1 for additional results. | 35 |
| IX B-8 | Acrylonitrile | I | P | 1000 ppm<br>100 ppm | 51% reduction<br>28% reduction | 24 hr. contact time; carbon dose was 10 times chemical conc. | 72 |
| IX B-9 | Amyl Acetate (primary) | I | P | 985 ppm | 88% reduction; 119 ppm final conc., 0.175 gm/gm carbon capacity. | See IXB-1 for additional results. | 35 |
| IX B-10 | Butyl Acetate | I | P | 1000 ppm | 84.6% reduction; 154 ppm final conc., 0.169 gm/gm carbon capacity. | See IXB-1 for additional results. | 35 |
| IX B-11 | Butyl Acrylate | I | P | 1000 ppm | 95.9% reduction; 43 ppm final conc., 0.193 gm/gm carbon capacity. | See IXB-1 for additional results. | 35 |
| IX B-12 | Butyraldehyde | I | P | 1000 ppm | 52.8% reduction; 472 ppm final conc., 0.106 gm/gm carbon capacity. | See IXB-1 for additional results. | 35 |
| IX B-13 | Butyric Acid | I | P | 1000 ppm | 59.5% reduction; 405 ppm final conc., 0.119 gm/gm carbon capacity. | See IXB-1 for additional results. | 35 |
| IX B-14 | Butyric Acid | B,L | P | 100 ug/l | Complete reduction; No desorption from carbon by elutriating with solvent. | Filtrasorb 300 used. Solvents included pentane-acetone, diethyl ether, | 20 |

(continued)

TABLE E-1 (continued)

Concentration Process: Activated Carbon (IX)
Chemical Classification: Aliphatics (B)

| No.[a] | Chemical[b] | Description of Study: Study Type[c] | Waste Type[d] | Influent Char. | Results of Study | Comments | Ref. |
|---|---|---|---|---|---|---|---|
| IX B-14 cont | | | | | | methylene chloride-acetone, methyl chloride-acetone, and acetone. | |
| IX B-15 | Caproic Acid | B,L | P | 100 ug/l | 90% reduction; 3% desorbed from carbon by elutriating with solvent. | See IXB-14 for additional results | 20 |
| IX B-16 | Caproic Acid | I | P | 1000 ppm | 97% reduction; 30 ppm final conc., 0.194 gm/gm carbon capacity. | See IXB-1 for additional results. | 35 |
| IX B-17 | Crotonaldehyde | I | P | 1000 ppm | 45.6% reduction; 544 ppm final conc., 0.092 gm/gm carbon capacity. | See IXB-1 for additional results. | 35 |
| IX B-18 | Cyclohexanone | I | P | 1000 ppm | 66.8% reduction; 332 ppm final conc., 0.134 gm/gm carbon capacity. | See IXB-1 for additional results. | 35 |
| IX B-19 | Decanoic Acid | B,L | P | 100 ug/l | Complete reduction; 2% desorbed from carbon by elutriating with solvent. | See IXB-14 for additional results. | 20 |
| IX B-20 | Dicyclo-pentadiene (DCPC) | P,C | I | 82 to 1000 ppb | Diisopropyl methylphosphonate (DIMP) and TOC used to measure performance. DCPC found to vaporize. | Contaminated ground-water. See IXB-23 for remarks. | 86 |
| IX B-21 | Diethylene Glycol | I | P | 1000 ppm | 26.2% reduction; 738 ppm final conc., 0.053 gm/gm carbon capacity. | See IXB-1 for additional results. | 35 |
| IX B-22 | Diisobutyl Ketone | I | P | 300 ppm | 100% reduction; 0.060 gm/gm carbon capacity. | See IXB-1 for additional results. | 35 |

(continued)

TABLE E-1 (continued)

Concentration Process: Activated Carbon (IX)
Chemical Classification: Aliphatics (B)

| No.[a] | Chemical[b] | Description of Study: Study Type[c] | Waste Type[d] | Influent Char. | Results of Study | Comments | Ref. |
|---|---|---|---|---|---|---|---|
| IX B-23 | Diisopropyl Methyl-phosphonat (DIMP) | P,C | I (Bog Water) | 210 to 430 ppb DIMP; TOC about 40 ppm; pH 7.6 to 8.0 | Average DIMP removal was 99.75% ( <1.9 ppb in effluent) | Test 1- Influent flow 7 gpm; carbon feed rate 1649 µg/l, anionic polymer Herufloc 836.2 at 0.556 gm/l conc. and 1000 cc/min flow added; cationic polymer Cat-floc at 4 µg/l conc. and 26.5 cc/min flow added; duration of test 4 weeks; 28,600 gal. throughput. | 86 |
| | | | I (Bog Water) | 290 to 470 ppb | Average DIMP removal was 98.77% ( 6.4 ppb in effluent) | Test 2- Carbon feed 1000 ug/l duration of test 3 weeks; other conditions similar to Test 1. | |
| | | | | | DIMP removal averaged 99% at 350 µg/l carbon dose and 96.33% at 250 ug/l carbon dose. Optimum anionic/cationic mixture was found to be anionic-0.13 gm/l and 120 cc/min, cationic - 1.59 gm/l & 25 cc/min. | Test 3- Influent flow rate 5 gpm; anionic conc. and flow-0.13 gm/l & 120 cc/min; cationic conc. and flow-1.59 gm/l & 25 cc/min; carbon feed at 350 ug/l & 250 µg/l for 1 week each. | |
| | | | | | DIMP removal ranged from 92.5 to 97.5% at 175 µg/l carbon dose and 98.7% at 220 ug/l carbon dose. | | |

(continued)

TABLE E-1 (continued)

Concentration Process: Activated Carbon (IX)
Chemical Classification: Aliphatics (B)

| No.[a] | Chemical[b] | Description of Study: Study Type[c] | Waste Type[d] | Influent Char. | Results of Study | Comments | Ref. |
|---|---|---|---|---|---|---|---|
| IX B-23 cont | | | | | DIMP removal steadily decreased to about 40% at carbon dose of 100 ug/l. | | |
| | | | I (Bog Water) | 400 ppb | DIMP conc. reduced to 50 ppb, reactivated carbon tested 17000 gal before breakthrough, virgin carbon treated 9600 gal; reactivated carbon capacity-3.8 ug DIMP/gm carbon (0.9 lb carbon/1000 gal); virgin carbon capacity 2.3 ug DIMP/gm carbon (1.4lb carbon/1000 gal.) | Filtrasorb 300 carbon was used. | |
| | | | I (Ground Water) | 2680 ppb | 98% removal at carbon dose of 252 ug/l | Hydrodarco C carbon; duration of test-13100 gal. | |
| | | | | 2400 ppb | 94 to 97% removal at carbon dose of 200 ug/l | Hydrodarco C carbon; duration of test - 9000 gal. | |
| | | | | 2564 ppb | Could not achieve steady state performance at carbon dose of 252 ug/l & flow rate of 225 gal/hr. | Aqua Nuchar carbon; duration of test - 15200 gal (2 weeks). | |
| IX B-24 | Dipropylene Glycol | I | P | 1000 ppm | 16.5% reduction; 835 ppm final conc., 0.033 gm/gm carbon capacity. | See IXB-1 for additional results. | 35 |
| IX B-25 | Dodecane | B,L | P | 100 ug/l | Complete removal; 28% desorbed from carbon by elutriating with solvent. | See IXB-14 for additional results. | 20 |

(continued)

TABLE E-1 (continued)

Concentration Process: Activated Carbon (IX)
Chemical Classification: Aliphatics (B)

| No.[a] | Chemical[b] | Description of Study: Study Type[c] | Waste Type[d] | Influent Char. | Results of Study | Comments | Ref. |
|---|---|---|---|---|---|---|---|
| IX B-26 | Ethyl Acetate | I | P | 1000 ppm | 50.5% reduction; 495 ppm final conc., 0.100 gm/gm carbon capacity. | See IXB-1 for additional results. | 35 |
| IX B-27 | Ethyl Acrylate | I | P | 1015 ppm | 77.7% reduction; 226 ppm final conc., 0.157 gm/gm carbon capacity. | See IXB-1 for additional results. | 35 |
| IX B-28 | Ethylene Glycol | I | P | 1000 ppm | 6.8% reduction; 932 ppm final conc., 0.014 gm/gm carbon capacity. | See IXB-1 for additional results. | 35 |
| IX B-29 | Formaldehyde | I | P | 1000 ppm | 9.2% reduction; 908 ppm final conc., 0.018 gm/gm carbon capacity. | See IXB-1 for additional results. | 35 |
| IX B-30 | Formic Acid | I | P | 1000 ppm | 23.5% reduction; 765 ppm final conc., 0.047 gm/gm carbon capacity. | See IXB-1 for additional results. | 35 |
| IX B-31 | Heptanoic Acid | B,L | P | 100 ug/l | 10% reduction; 1% desorbed from carbon by elutriating with solvent. | See IXB-14 for additional results. | 20 |
| IX B-32 | Hexadecane | B,L | P | 100 ug/l | Complete reduction; 12% desorbed from carbon by elutriating with solvent. | See IXB-14 for additional results. | 20 |
| IX [illegible] | Hexylene Glycol | I | P | 1000 ppm | 61.4% reduction; 386 ppm final conc., 0.122 gm/gm carbon capacity. | See IXB-1 for additional results. | 35 |
| [illegible] | sobutyl [illegible]cetate | I | P | 1000 ppm | 82% reduction; 180 ppm final conc., 164 gm/gm carbon capacity. | See IXB-1 for additional results. | 35 |

(continued)

TABLE E-1 (continued)

Concentration Process: Activated Carbon (IX)
Chemical Classification: Aliphatics (B)

| No.[a] | Chemical[b] | Description of Study: Study Type[c] | Waste Type[d] | Influent Char. | Results of Study | Comments | Ref. |
|---|---|---|---|---|---|---|---|
| IX B-35 | Isoprene | I | P | 1000 ppm<br>500 ppm | 86% reduction<br>86% reduction | See IXA-5 | 72 |
| IX B-36 | Isopropyl Acetate | I | P | 1000 ppm | 68.1% reduction; 319 ppm final conc., 0.137 gm/gm carbon capacity. | See IXB-1 for additional results | 35 |
| IX B-37 | Lauric Acid | B,L | P | 100 µg/l | Complete removal; No desorption from carbon by elutriation with solvent. | See IXB-14 for additional results. | 20 |
| IX B-38 | Methyl Acetate | I | P | 1030 ppm | 26.2% reduction; 760 ppm final conc., 0.054 gm/gm carbon capacity. | See IXB-1 for additional results. | 35 |
| IX B-39 | Methyl Butyl Ketone | I | P | 988 ppm | 80.7% reduction; 191 ppm final conc., 0.159 gm/gm carbon capacity. | See IXB-1 for additional results. | 35 |
| IX B-40 | Methyl Decanoate | B,L | P | 100 µg/l | Complete removal; 71% desorbed from carbon by elutriation with solvent. | See IXB-14 for additional results. | 20 |
| IX B-41 | Methyl Dodecanoate | B,L | P | 100 µg/l | Complete removal; 50% desorbed from carbon by elutriation with solvent. | See IXB-14 for additional results. | 20 |
| IX B-42 | Methyl Ethyl Ketone | I | P | 1000 ppm | 46.8% reduction; 532 ppm final conc., 0.094 gm/gm carbon capacity. | See IXB-1 for additional results. | 35 |
| IX B-43 | Methyl Hexadecanoate | B,L | P | 100 µg/l | Complete removal; 35% desorbed from carbon by elutriation with solvent. | See IXB-14 for additional results. | 20 |
| IX B-44 | Methyl Isoamyl Ketone | I | P | 986 ppm | 85.2% reduction; 146 ppm final conc., 0.169 gm/gm carbon capacity. | See IXB-1 for additional results. | 35 |

(continued)

TABLE E-1 (continued)

Concentration Process: Activated Carbon (IX)
Chemical Classification: Aliphatics (B)

| No.[a] | Chemical[b] | Description of Study: Study Type[c] | Waste Type[d] | Influent Char. | Results of Study | Comments | Ref. |
|---|---|---|---|---|---|---|---|
| IX B-45 | Methyl Octadecanoate | B,L | P | 100 µg/l | Complete removal; 40% desorbed from carbon by elutriation with solvent. | See IXB-14 for additional results. | 20 |
| IX B-46 | Methyl Propyl Ketone | I | P | 1000 ppm | 69.5% reduction; 305 ppm final conc., 0.139 gm/gm carbon capacity. | See IXB-1 for additional results. | 35 |
| IX B-47 | Myristic Acid | B,L | P | 100 µg/l | Complete removal; no desorption from carbon by elutriation with solvent. | See IXB-14 for additional results. | 20 |
| IX B-48 | Octadecane | B,L | P | 100 µg/l | Complete removal; no desorption from carbon by elutriation w/solvent. | See IXB-14 for additional results. | 20 |
| IX B-49 | Octanoic Acid | B,L | P | 100 µg/l | 50% removal; 1% desorbed from carbon by elutriation w/solvent. | See IXB-14 for additional results. | 20 |
| IX B-50 | Propionaldehyde | L | P | 1000 ppm | 27.7% reduction; 723 ppm final conc., 0.057 gm/gm carbon capacity. | See IXB-1 for additional results. | 35 |
| IX B-51 | Propionic Acid | B,L | P | 100 µg/l | Complete removal, no desorption from carbon by elutriation with solvent. | See IXB-1 for additional results. | 20 |
| IX B-52 | Propionic Acid | I | P | 1000 ppm | 32.6% reduction; 674 ppm final conc., 0.065 gm/gm carbon capacity. | See IXB-1 for additional results. | 35 |
| IX B-53 | Propyl Acetate | I | P | 1000 ppm | 75.2% reduction; 248 ppm final conc., 0.149 gm/gm carbon capacity. | See IXB-1 for additional results. | 35 |
| IX B-54 | Propylene Glycol | I | P | 1000 ppm | 11.6% reduction; 884 ppm final conc., 0.024 gm/gm carbon capacity. | See IXB-1 for additional results. | 35 |

(continued)

TABLE E-1 (continued)

Concentration Process: Activated Carbon (IX)
Chemical Classification: Aliphatics (B)

| No.[a] | Chemical[b] | Description of Study | | | Results of Study | Comments | Ref. |
|---|---|---|---|---|---|---|---|
| | | Study Type[c] | Waste Type[d] | Influent Char. | | | |
| IX B-55 | Propylene Oxide | I | P | 1000 ppm | 26.1% reduction; 739 ppm final conc., 0.052 gm/gm carbon capacity. | See IXB- 1 for additional results. | 35 |
| IX B-56 | Pyruvic Acid | B,L | P | 100 µg/l | Complete removal;no desorption from carbon using organic solvent. | See IXB-14 for additional results. | 20 |
| IX B-57 | Tetradecane | B,L | P | 100 µg/l | Complete removal; 25% desorbed from carbon by elutriation with solvent. | See IXB-14 for additional results. | 20 |
| IX B-58 | Tetraethylene Glycol | I | P | 1000 ppm | 58.1% reduction; 419 ppm final conc., 0.116 gm/gm carbon capacity. | See IXB-1 for additional results. | 35 |
| IX B-59 | Triethylene Glycol | I | P | 1000 ppm | 52.3% reduction; 477 ppm final conc., 0.105 gm/gm carbon capacity. | See IXB-1 for additional results. | 35 |
| IX B-60 | Valeric Acid | B,L | P | 100 µg/l | Complete removal; 10% desorbed from carbon by elutriation with solvent. | See IXB-14 for additional results. | 20 |
| IX B-61 | Valeric Acid | I | P | 1000 ppm | 79.7% reduction; 203 ppm final conc., 0.159 gm/gm carbon capacity. | See IXB-1 for additional results. | 35 |
| IX B-62 | Vinyl Acetate | I | P | 1000 ppm | 64.3% reduction; 357 ppm final conc., 0.129 gm/gm carbon capacity. | See IXB-1 for additional results. | 35 |

(continued)

TABLE E-1 (continued)

Concentration Process: Activated Carbon (IX)
Chemical Classification: Amines (C)

| No.[a] | Chemical[b] | Description of Study: Study Type[c] | Waste Type[d] | Influent Char. | Results of Study | Comments | Ref. |
|---|---|---|---|---|---|---|---|
| IX C-1 | Allyamine | I | P | 1000 ppm | 31.4% reduction; 686 ppm final conc., 0.063 gm/gm carbon capacity. Adsorbability found to increase with molecular weight. For compounds of <4 carbons order of decreasing adsorption was: undissociated organic acids, aldehydes, esters, ketones, alcohols (when >4 carbons, alcohols moved ahead of esters), glycols. Aromatics had greatest adsorption. Results of two component isotherm tests could be predicted from single compound tests; however, in four component tests only 60% of predicted adsorption occurred. Continuous columns produced 60-80% of theoretical isotherm capacity. | Carbon dose was 5 g/l Westvaco Nuchar. | 35 |
| IX C-2 | Aniline | B,L | P | 100 µg/l | 100% reduction; No desorption from carbon by elutriation with solvents. | Filtrasorb 300 used. Solvents included pentane-acetone, diethyl ether, methylene chloride-acetone, methyl chloride-acetone, and acetone. | 20 |
| [illegible] | [illegible]line | I | P | 1000 ppm | 74.9% removal; 251 ppm final conc.; 0.15 gm/gm carbon capacity. | See IXC-1 for additional results. | 35 |

(continued)

TABLE E-1(continued)

Concentration Process: Activated Carbon (IX)
Chemical Classification: Amines (C)

| No.[a] | Chemical[b] | Description of Study: Study Type[c] | Waste Type[d] | Influent Char. | Results of Study | Comments | Ref. |
|---|---|---|---|---|---|---|---|
| IX C-4 | Butylamine | B,L | P | 100 µg/l | 100% removal; no desorption from carbon by elutriation with solvent. | See IXC-2 for additional results. | 20 |
| IX C-5 | Butylamine | I | P | 1000 ppm | 52% reduction; 480 ppm final conc., 0.103 gm/gm carbon capacity. | See IXC-1 for additional results. | 35 |
| IX C-6 | Cyclohexyl-amine | B,L | P | 100 µg/l | 100% removal; 38% desorption from carbon by elutriation with solvent. | See IXC-2 for additional results. | 20 |
| IX C-7 | Dibutylamine | B,L | P | 100 µg/l | 100% removal; No desorption from carbon by elutriation with solvent. | See IXC-2 for additional results. | 20 |
| IX C-8 | Di-N-Butylamine | I | P | 1000 ppm | 87% removal; 130 ppm final conc., 0.174 gm/gm carbon capacity. | See IXC-1 for additional results. | 35 |
| IX C-9 | Diethanolamine | I | P | 996 ppm | 27.5% removal; 722 ppm final conc., 0.057 gm/gm carbon capacity. | See IXC-1 for additional results. | 35 |
| IX C-10 | Diethylene-triamine | I | P | 1000 ppm | 29.4% removal; 706 ppm final conc., 0.062 gm/gm carbon capacity. | See IXC-1 for additional results. | 35 |
| IX C-11 | Dihexylamine | B,L | P | 100 µg/l | 100% removal; 24% desorption from carbon by elutriation with solvent. | See IXC-2 for additional results. | 20 |
| IX C-12 | Diisopropan-olamine | I | P | 1000 ppm | 45.7% removal; 543 ppm final conc., 0.091 gm/gm carbon capacity. | See IXC-1 for additional results. | 35 |
| IX C-13 | Dimethylamine | B,L | P | 100 µg/l | 100% removal; 82% desorption from carbon by elutriation with solvent. | See IXC-2 for additional results. | 20 |

(continued)

TABLEE-1 (continued)

Concentration Process: Activated Carbon (IX)
Chemical Classification: Amines (C)

| No.[a] | Chemical[b] | Description of Study: Study Type[c] | Waste Type[d] | Influent Char. | Results of Study | Comments | Ref. |
|---|---|---|---|---|---|---|---|
| IX C-14 | Dimethyl-nitrosamine | I | P | | Not adsorbed. | | 31 |
| IX C-15 | Di-N-Propylamine | I | P | 1000 ppm | 80.2% removal; 198 ppm final conc., 0.174 gm/gm carbon capacity. | See IXC-1 for additional results. | 35 |
| IX C-16 | Ethylene-diamine | I | P | 1000 ppm | 10.7% removal; 893 ppm final conc., 0.021 gm/gm carbon capacity. | See IXC-1 for additional results. | 35 |
| IX C-17 | N-Ethyl-morpholine | I | P | 1000 ppm | 47.3% removal; 527 ppm final conc., 0.095 gm/gm carbon capacity. | See IXC-1 for additional results. | 35 |
| IX C-18 | Hexylamine | B,L | P | 100 µg/l | 100% removal; 24% desorbed from carbon by elutriation with solvent. | See IXC-2 for additional results. | 20 |
| IX C-19 | 2-Methyl-5-Ethylpyridine | I | P | 1000 ppm | 89.3% removal; 107 ppm final conc., 0.179 gm/gm carbon capacity. | See IXC-1 for additional results. | 35 |
| IX C-20 | N-Methyl Morpholine | I | P | 1000 ppm | 42.5% removal; 575 ppm final conc., 0.085 gm/gm carbon capacity. | See IXC-1 for additional results. | 35 |
| IX C-21 | Monoethan-olamine | I | P | 1012 ppm | 7.2% removal; 939 ppm final conc., 0.015 gm/gm carbon capacity. | See IXC-1 for additional results. | 35 |
| IX C- | Monoisopro-panolamine | I | P | 1000 ppm | 20% removal; 800 ppm final conc., 0.04 gm/gm carbon capacity. | See IXC-1 for additional results. | 35 |
| | Morpholine | B,L | P | 100 µg/l | 100% removal; 67% desorbed from carbon by elutriation with solvent. | See IXC-2 for additional results. | 20 |

(continued)

TABLE E-1 (continued)

Concentration Process: Activated Carbon (IX)
Chemical Classification: Amines (C)

| No.[a] | Chemical[b] | Description of Study: Study Type[c] | Waste Type[d] | Influent Char. | Results of Study | Comments | Ref. |
|---|---|---|---|---|---|---|---|
| IX C-24 | B-Napthylamine | I | P | | Isotherm kinetics were as follows:<br>Carbon — K — 1/n<br>Darco — 77.4 — 0.361<br>Filtrasorb — 166.0 — 0.234<br>Carbon dose (mg/l) required to reduce 1 mg/l to 0.1 mg/l: Darco - 27<br>Filtrasorb - 10 | | 31 |
| IX C-25 | Octylamine | B,L | P | 100 µg/l | 100% removal; no desorption from carbon by elutriation with solvent. | See IXC-2 for additional results. | 20 |
| IX C-26 | Piperidine | B,L | P | 100 µg/l | 100% removal; 73% desorbed from carbon by elutriation with solvent. | See IXC-2 for additional results. | 20 |
| IX C-27 | Pyridine | I | P | 1000 ppm | 53.3% removal; 467 ppm final conc., 0.107 gm/gm carbon capacity. | See IXC-1 for additional results. | 35 |
| IX C-28 | Pyrrole | B,L | P | 100 µg/l | 100% removal; 16% desorbed from carbon by elutriation with solvent. | See IXC-2 for additional results. | 20 |
| IX C-29 | Tributylamine | B,L | P | 100 µg/l | 100% removal; no desorption from carbon by elutriation with solvent. | See IXC-2 for additional results. | 20 |
| IX C-30 | Triethanol-amine | I | P | 1000 ppm | 33% removal; 670 ppm final conc., 0.067 gm/gm carbon capacity. | See IXC-1 for additional results. | 35 |

(continued)

TABLE E-1 (continued)

Concentration Process: Activated Carbon (IX)
Chemical Classification: Aromatics (D)

| No.[a] | Chemical[b] | Description of Study: Study Type[c] | Waste Type[d] | Influent Char. | Results of Study | Comments | Ref. |
|---|---|---|---|---|---|---|---|
| IX D-1 | Acetophenone | B,L | P | 100 µg/l | 50% reduction; 2% desorbed from carbon by elutriation with solvent. | Filtrasorb 300 used. Solvents included pentane-acetone, diethyl ether, methylene chloride-acetone, methey chloride-acetone, and acetone. | 20 |
| IX D-2 | Acetophenone | I | P | 1000 ppm | 97.2% removal; 28 ppm final conc., 0.194 gm/gm carbon capacity. Adsorbability found to increase with molecular weight. For compounds of <4 carbons order of decreasing adsorption was: undissociated organic acids, aldehydes, esters, ketones, alcohols (when >4 carbons, alcohols moved ahead of esters), glycols. Aromatics had greatest adsorption. Results of two component isotherm tests could be predicted from single compound tests; however, in four-component tests, only about 60% of predicted adsorption occurred. Continuous columns produced 60-80% of theoretical isotherm capacity. | Carbon dose was 5 g/l Westvaco Nuchar. | 35 |

(continued)

TABLE E-1(continued)

Concentration Process: Activated Carbon (IX)
Chemical Classification: Aromatics (D)

| No.[a] | Chemical[b] | Description of Study: Study Type[c] | Waste Type[d] | Influent Char. | Results of Study | Comments | Ref. |
|---|---|---|---|---|---|---|---|
| IX D-3 | Benzaldehyde | B,L | P | 100 µg/l | 50% reduction; 2% desorbed from carbon by elutriation with solvent. | See IXD-1 for additional results. | 20 |
| IX D-4 | Benzaldehyde | I | P | 1000 ppm | 94% reduction; 60 ppm final conc., 0.188 gm/gm carbon capacity. | See IXD-2 for additional results. | 35 |
| IX D-5 | Benzaldehyde | I | P | 1000 ppm<br>500 ppm<br>100 ppm | 99% removal<br>99% removal<br>98% removal | 24 hr. contact time; carbon dose was 10 times chemical conc. | 72 |
| IX D-6 | Benzene | P,C | H | 1 ppb | 90% removal (to 0.1 ppb effluent conc.) achieved in 8.5 min. contact time. | Spilled material treated using EPA's mobile treatment trailer. | 6 |
| IX D-7 | Benzene | I | P | 1 ppm | 0.7 mg/gm carbon capacity. | | 21 |
| IX D-8 | Benzene | I | P | | Isotherm kinetics were as follows:<br>Carbon — K — 1/n<br>Darco — 26.8 — 1.305<br>Filtrasorb — 18.5 — 1.158<br>Carbon dose (mg/l) required to reduce 1 mg/l to 0.1 mg/l:<br>Darco - 678<br>Filtrasorb - 705 | | 31 |
| IX D-9 | Benzene | I | P | 416 ppm | 95% reduction; 21 ppm final conc., 0.080 gm/gm carbon capacity. | See IXD- 2 for additional results. | 35 |

(continued)

TABLE E-1(continued)

Concentration Process: Activated Carbon (IX)
Chemical Classification: Aromatics (D)

| No.[a] | Chemical[b] | Description of Study: Study Type[c] | Waste Type[d] | Influent Char. | Results of Study | Comments | Ref. |
|---|---|---|---|---|---|---|---|
| IX D-10 | Benzene | R | I | 1500 ppm TOC | Effluent conc. of 30 ppm TOC achieved (98% removal) | At contact time of 55 min.; 0.15 MGD flow; pretreatment included pH adjustment. | 38 |
| IX D-11 | Benzene | I | P | 500 ppm<br>250 ppm<br>50 ppm | 95% removal<br>91% removal<br>60% removal | 24 hr. contact time; carbon dose was 10 times chemical conc. | 72 |
| IX D-12 | Benzene | R | U | 416 ppm | 95% removal at 0.5% carbon dose. | | 90 |
| IX D-13 | Benzidine | I | P | | Isotherm kinetics were as as follows:<br>Carbon — K — 1/n<br>Darco — 85.4 — 0.253<br>Filtrasorb 173 — 0.288<br>Carbon dose (mg/l) required to reduce 1 mg/l to 0.1 mg/l:<br>Darco - 19<br>Filtrasorb - 10 | | 31 |
| IX D-14 | Benzil | B,L | P | 100 ug/l | 50% removal; 8% desorbed from carbon by elutriation with solvent. | See IXD-1 for additional results. | 20 |
| IX D-15 | Benzoic Acid | B,L | P | 100 ug/l | Complete removal; 2% desorbed from carbon by elutriation with solvent. | See IXD-1 for additional results. | 20 |
| IX | Benzoic Acid | I | P | 1000 ppm | 91.1% removal; 89 ppm final conc., 0.183 gm/gm carbon capacity. | See IXD-2 for additional results. | 35 |

(continued)

TABLE E-1 (continued)

Concentration Process: Activated Carbon (IX)
Chemical Classification: Aromatics (D)

| No.[a] | Chemical[b] | Description of Study | | | Results of Study | Comments | Ref. |
|---|---|---|---|---|---|---|---|
| | | Study Type[c] | Waste Type[d] | Influent Char. | | | |
| IX D-17 | Chlorinated Aromatics | R | I | 6000 ppm TOC | Effluent conc. of 3000 ppm TOC achieved (50% reduction). High effluent conc. because activated carbon served as pretreatment before biological system. | At contact time of 1375 min; flow of 6000 gpd; pretreatment included chemical reduction. | 38 |
| IX D-18 | Chlorobenzene | I | P | 1 mg/l | 93 mg/gm carbon capacity. | | 21 |
| IX D-19 | Chlorobenzene | F,C | D | | 50% reduction. | Treatment of effluent from 0.66 $m^3$/sec biological system. | 64 |
| IX D-20 | Chlorobenzene | R | U | 416 ppm | 95% removal at 0.5% carbon dose. | | 90 |
| IX D-21 | 1-Chloro-2-Nitrobenzene | I | P | 1 ppm | 103 mg/gm adsorption capacity. | | 21 |
| IX D-22 | Cumene | B,L | P | 100 µg/l | Complete removal; 8% desorbed from carbon by elutriation with solvent. | See IXD-1 for additional results. | 20 |
| IX D-23 | o-Dichlorobenzene | B,L | P | 100 µg/l | Complete removal; 5% desorbed from carbon by elutriation with solvent. | See IXD-1 for additonal results. | 20 |
| IX D-24 | o-Dichlorobenzene | R | U | 416 ppm | 95% removal at 0.5% carbon dose. | | 90 |

(continued)

TABLE E-1 (continued)

Concentration Process: Activated Carbon (IX)
Chemical Classification: Aromatics (D)

| No.[a] | Chemical[b] | Description of Study: Study Type[c] | Waste Type[d] | Influent Char. | Results of Study | Comments | Ref. |
|---|---|---|---|---|---|---|---|
| IX D-25 | m-Dichlorobenzene | B,L | P | 100 µg/l | Complete removal; 15% desorbed from carbon by elutriation with solvent. | See IXD-1 for additional results. | 20 |
| IX D-26 | m-Dichlorobenzene | R | U | 416 ppm | 95% removal at 0.5% carbon dose. | | 90 |
| IX D-27 | 1,4-Dichlorobenzene | F,C | D | | 60% removal | Treatment of effluent from 0.66 $m^3$/sec biological system. | 64 |
| IX D-28 | p-Dichlorobenzene | B,L | P | 100 µg/l | 100% removal; 2% desorbed from carbon by elutriation with solvent. | See IXD-1 for additional results. | 20 |
| IX D-29 | p-Dichlorobenzene | R | U | 416 ppm | 95% removal at 0.5% carbon dose. | | 90 |
| IX D-30 | 3,3'-Dichlorobenzidine | I | P | | Isotherm kinetics were as follows:<br>Carbon — K — 1/n<br>Darco — 126 — 0.253<br>Filtrasorb — 240 — 0.194<br>Carbon dose (mg/l) to reduce 1 mg/l to 0.1 mg/l:<br>Darco - 12.8<br>Filtrasorb - 5.7 | | 31 |
| IX D-32 | Dimethylaniline (Xylidine) | P,C | H | 380 ppb | 94% removal (23 ppb in effluent) achieved in 85 min. contact time. | 250,000 gal. spilled materials treated with EPA mobile treatment trailer. | 6 |

(continued)

TABLE E-1 (continued)

Concentration Process: Activated Carbon (IX)
Chemical Classification: Aromatics (D)

| No.[a] | Chemical[b] | Description of Study: Study Type[c] | Waste Type[d] | Influent Char. | Results of Study | Comments | Ref. |
|---|---|---|---|---|---|---|---|
| IX D-32 | 2,4-Dinitro-toluene | R | U | 416 ppm | 95% removal at 0.5% carbon dose. | Not thermally regenerable. | 90 |
| IX D-33 | 2,6-Dinitro-toluene | R | U | 416 ppm | 95% removal at 0.5% carbon dose. | Not thermally regenerable. | 90 |
| IX D-34 | Ethylbenzene | I | P | 1 mg/l | 53 mg/gm carbon capacity. | | 21 |
| IX D-35 | Ethylbenzene | I | L | 115 ppm | 84.3% reduction; 21 ppm final conc., 0.08 gm/gm carbon capacity. | See IXD-2 for additional results. | 35 |
| IX D-36 | Ethylbenzene | F,C | D | | 50% removal | Treatment of effluent from 0.66 $m^3$/sec biological system. | 64 |
| IX D-37 | Ethylbenzene | R | U | 115 ppm | 84.3% removal at 0.5% carbon dose. | | 90 |
| IX D-38 | Hexachloro-benzene | R | U | 416 ppm | 95% removal at 0.5% carbon dose. | | 90 |
| IX D-39 | Hydroquinone | I | P | 1000 ppm | 83.3% removal; 167 ppm final conc., 0.167 gm/gm carbon capacity. | See IXD-2 for additional results. | 35 |
| IX D-40 | Isophrone | I | P | 1000 ppm | 96.6% removal; 34 ppm final conc., 0.193 gm/gm carbon capacity. | See IXD-2 for additional results. | 35 |
| IX D-41 | Isophrone | R | U | 1000 ppm | 96.6% removal at 0.5% carbon dose. | | 90 |

(continued)

TABLE E-1(continued)

Concentration Process: Activated Carbon (IX)
Chemical Classification: Aromatics (D)

| No.[a] | Chemical[b] | Description of Study: Study Type[c] | Waste Type[d] | Influent Char. | Results of Study | Comments | Ref. |
|---|---|---|---|---|---|---|---|
| IX D-42 | 4,4'-Methylene Bis-(2-Chloro-aniline | I | P | | Isotherm kinetics were as follows:<br>Carbon — K — 1/n<br>Darco — 120 — 0.96<br>Filtrasorb — 240 — 0.982<br>Carbon dose (mg/l) to reduce 1 mg/l to 0.1 mg/l:<br>Darco - 27<br>Filtrasorb - 15 | | 31 |
| IX D-43 | Nitrobenzene | I | P | 1 ppm | 68 mg/gm adsorption capacity | | 21 |
| IX D-44 | Nitrobenzene | I | P | 1023 ppm | 95.6% removal; 44 ppm final conc., 0.196 gm/gm carbon capacity. | See IXD-2 for additional results. | 35 |
| IX D-45 | Nitrobenzene | R | U | 416 ppm | 95% removal at 0.5% carbon dose. | | 90 |
| IX D-46 | Paraldehyde | I | P | 1000 ppm | 73.9% removal; 261 ppm final conc., 0.148 gm/gm carbon capacity. | See IXD-2 for additional results. | 35 |
| IX D-47 | Pyridine | I | P | 1000 ppm | 47.3% removal; 527 ppm final conc., 0.095 gm/gm carbon capacity. | See IXD-2 for additional results. | 35 |
| IX D-48 | Pyridine | I | P | 1000 ppm<br>500 ppm | 86% removal; 145 ppm final conc., 86% removal; 71 ppm final conc. | 24 hr. contact time; carbon dose was 10 times chemical conc. | 72 |
| IX D-[illegible] | Styrene | I | P | 1 ppm | 120 mg/gm adsorption capacity. | | 21 |

(continued)

TABLE E-1 (continued)

Concentration Process: Activated Carbon (IX)
Chemical Classification: Aromatics (D)

| No.[a] | Chemical[b] | Description of Study: Study Type[c] | Waste Type[d] | Influent Char. | Results of Study | Comments | Ref. |
|---|---|---|---|---|---|---|---|
| IX D-50 | Styrene | I | P | 180 ppm | 88.8% removal; 44 ppm final conc., 0.196 gm/gm carbon capacity. | See IXD-2 for additional results. | 35 |
| IX D-51 | Styrene | I | P | 200 ppm<br>100 ppm<br>20 ppm | 97% removal<br>93% removal<br>55% removal | 24 hr contact time; carbon dose was 10 times chemical conc. | 72 |
| IX D-52 | Styrene Oxide | I | P | 1000 ppm | 95.3% removal; 47 ppm final con., 0.19 gm/gm carbon capacity. | See IXD-2 for additional results. | 35 |
| IX D-53 | Toluene | P,C | H | 120 ppb | 99.8% removal (0.3 ppb in effluent achieved in 8.5 min contact time. | 250,000 gal spilled materials treated with EPA mobile treatment trailer. | 6 |
| IX D-54 | Toluene | I | P | 317 ppm | 79.2% removal; 66 ppm final conc., 0.05 gm/gm carbon capacity. | See IXD-2 for additional results. | 35 |
| IX D-55 | Toluene | R | U | 317 ppm | 79% removal at 0.5% carbon dose. | | 90 |
| IX D-56 | Toxaphene | I | I | 155 ppb<br>pH 7.0 | >99% removal; <1 ppb final conc., 42 mg/gm carbon capacity. | | 66 |
| IX D-57 | 1,2,4-Tri-chlorobenzene | B,L | P | 100 μg/l | 100% removal; no desorption from carbon by elutriation with solvent. | See IXD-1 for additional results. | 20 |
| IX D-58 | 1,2,4-Tri-chlorobenzene | F,C | D | | 70% reduction. | Treatment of effluent from 0.66 $m^3$/sec biological system. | 64 |
| IX D-59 | 1,2,4-Tri-chlorobenzene | R | U | 416 ppm | 95% removal at 0.5% carbon dose. | | 90 |

(continued)

TABLE E-1 (continued)

Concentration Process: Activated Carbon (IX)
Chemical Classification: Aromatics (D)

| No.[a] | Chemical[b] | Description of Study: Study Type[c] | Waste Type[d] | Influent Char. | Results of Study | Comments | Ref. |
|---|---|---|---|---|---|---|---|
| IX D-60 | 2,4,6-Trinitrotoluene (TNT) | P,C | I | 108 ppm | Carbon adsorption capacity was 0.125 gm/gm at 1 ppm breakthrough after 600 bed volume (B.V.) | Filtrasorb 300 used. Thermal regeneration not possible because of explosion potential. | 2 |
| IX D-61 | 2,4,6-Trinitrotoluene (TNT) and other munitions plant wastewaters: Cyclonite(RDX), Nitramine (Tetryl), and cyclotetramethylene tetranitramine (HMX). | R | I | Not reported | Adsorption capacities (Lb/Lb carbon):<br>Contaminant / Breakthrough / Saturation<br>TNT 0.098 0.125<br>RDX 0.300 0.550<br>RDX & 0.008 0.048<br>TETRYL 0.002 0.024<br>TNT & 0.125 0.181<br>RDX 0.074 0.090<br>TNT & 0.134<br>HMX 0.006<br>(Note: breakthrough conc. not defined.)<br>Typical conc. of contaminants in wastewaters:<br>TNT - 0-400 ppm<br>RDX - 50-100 ppm<br>pH - 3.5-7.0<br>Flow - 0.02-1.0 MGD<br>Temp - 60-160°F | TNT is preferentially adsorbed over RDX; when RDX > TNT conc. TNT capacity reduced 50%. For 80 gpm facility costs estimated to be $8.90/1000 gal. | 40 |
| IX D- | Xylene | P,C | H | 140 ppb | >99.9% removal ( 0.1 ppb in effluent) achieved in 8.5 min. contact time. | 250,000 gal. spilled materials treated with EPA mobile treatment trailer. | 6 |

(continued)

TABLE E-1 (continued)

Concentration Process: Activated Carbon (IX)
Chemical Classification: Aromatics (D)

| No.[a] | Chemical[b] | Description of Study | | | Results of Study | Comments | Ref. |
|---|---|---|---|---|---|---|---|
| | | Study Type[c] | Waste Type[d] | Influent Char. | | | |
| IX D-63 | Xylene | I | P | 200 ppm<br>100 ppm | 86% removal<br>68% removal | 24 hr. contact time; carbon dose was 10 times chemical conc. | 72 |

(continued)

TABLE E-1(continued)

Concentration Process: Activated Carbon (IX)
Chemical Classification: Ethers (E)

| No.[a] | Chemical[b] | Description of Study: Study Type[c] | Waste Type[d] | Influent Char. | Results of Study | Comments | Ref. |
|---|---|---|---|---|---|---|---|
| IX E-1 | Bis(2-chloro-isopropyl) Ether | R | U | Not reported | 100% removal at 0.5% carbon dose. | | 90 |
| IX E-2 | Bis(chloro-ethyl) Ether | R | U | 94 ppb | 50% removal | | 90 |
| IX E-3 | Butyl Ether | I | P | 197 ppm | 100% removal; 0.039gm/gm carbon capacity. Adsorbality found to increase with molecular weight. For compounds of <4 carbons, order of decreasing adsorption was: undissociated organic acids, aldehydes, esters, ketones, alcohols (when>4 carbons, alcohols moved ahead of esters), glycols. Aromatics had greatest adsorption. Results of two-component isotherm tests could be predicted from single compound tests; however, in four-component tests, only about 60% of predicted adsorption occurred. Continuous columns produced 60-80% of theoretical isotherm capacity. | Carbon dose was 5g/l Westvaco Nuchar. | 35 |

(continued)

TABLE E-1 (continued)

Concentration Process: Activated Carbon (IX)
Chemical Classification: Ethers (E)

| No.[a] | Chemical[b] | Description of Study: Study Type[c] | Waste Type[d] | Influent Char. | Results of Study | Comments | Ref. |
|---|---|---|---|---|---|---|---|
| IX E-4 | Dichloroisopropyl Ether | I | P | 1008 ppm | 100% removal; 0.20 gm/gm carbon capacity. | See IXE-3 for additional results. | 35 |
| IX E-5 | Diethylene Glycol Monobutyl Ether | I | P | 1000 ppm | 82.7% removal; 173 ppm final conc., 0.166 gm/gm carbon capacity. | See IXE-3 for additional results. | 35 |
| IX E-6 | Diethylene Glycol Monoethyl Ether | I | P | 1010 ppm | 43.6% removal; 570 ppm final conc., 0.087 gm/gm carbon capacity. | See IXE-3 for additional results. | 35 |
| IX E-7 | Ethoxytriglycol | I | P | 1000 ppm | 69.7% removal; 303 ppm final conc., 0.139 gm/gm carbon capacity. | See IXE-3 for additional results. | 35 |
| IX E-8 | Ethylene Glycol Monobutyl Ether | I | P | 1000 ppm | 55.9% removal; 441 ppm final conc., 0.112 gm/gm carbon capacity. | See IXE-3 for additional results. | 35 |
| IX E-9 | Ethylene Glycol Monoethyl Ether | I | P | 1022 ppm | 31% removal; 705 ppm final conc., 0.063 gm/gm carbon capacity. | See IXE-3 for additional results. | 35 |
| IX E-10 | Ethylene Glycol Monoethyl Ether Acetate | I | P | 1000 ppm | 65.8% removal; 324 ppm final conc., 0.132 gm/gm carbon capacity. | See IXE- for additional results. | 35 |
| IX E-11 | Ethylene Glycol Monohexyl Ether | I | P | 975 ppm | 87.1% removal; 126 ppm final conc., 0.170 gm/gm carbon capacity. | See IXE-3 for additional results. | 35 |
| IX E-12 | Ethylene Glycol Monomethyl Ether | I | P | 1024 ppm | 13.5% removal; 886 ppm final conc., 0.028 gm/gm carbon capacity. | See IXE-3 for additional results. | 35 |
| IX E-13 | Isopropyl Ether | I | P | 1023 ppm | 80% removal; 203 ppm final conc., 0.162 gm/gm carbon capacity. | See IXE-3 for additional results. | 35 |

(continued)

TABLE E-1(continued)

Concentration Process: Activated Carbon (IX)
Chemical Classification: Halocarbons (F)

| No.[a] | Chemical[b] | Description of Study: Study Type[c] | Waste Type[d] | Influent Char. | Results of Study | Comments | Ref. |
|---|---|---|---|---|---|---|---|
| IX F-1 | Bromochloromethane | I | P<br>S<br>S,M | Not reported | Sorptive capacity x/m at residual conc ($C_f$) of 100 ppb was 3.37 mg/g in pure compound studies, 2.56 in a mixture and 0.875 in secondary effluent. | Mixture of 6 halocarbons added to secondary effluent. | 21 |
| IX F-2 | Bromodichloromethane | R | U | | Reported to be adsorbed | | 90 |
| IX F-3 | Bromoform | L | W | 0.2ppb | | See IXF-44 for results. | 46 |
| IX F-4 | Bromoform | B,L | P | 100 ppb | 100% removal; 10% desorbed from carbon by elutriation with solvent | Filtrasorb 300 used Solvent included pentane-acetone, diethylether, methylene chloride-acetone, methyl chloride-acetone, and acetone. | 20 |
| IX F-5 | Bromomethane | R | U | | Reported to be adsorbed. | | 90 |
| IX F-6 | Carbon Tetrachloride | P,C | H | 1.1 ppb | Not detected in effluent after 8.5 min contact time. | 250,000 gal spilled materials treated with EPA mobile treatment trailer. | 6 |
| [illegible] | [illegible]rbon [illegible]achloride | I | P | Not reported | Sorptive capacity (x/m) at residual conc. ($C_f$) of 100 ppb was 4.66 mg/g | | 21 |

(continued)

TABLE E-1 (continued)

Concentration Process: Activated Carbon (IX)
Chemical Classification: Halocarbons (F)

| No.[a] | Chemical[b] | Description of Study: Study Type[c] | Waste Type[d] | Influent Char. | Results of Study | Comments | Ref. |
|---|---|---|---|---|---|---|---|
| IX F-8 | Carbon Tetrachloride | R | U | | Reported to be adsorbed. | | 90 |
| IX F-9 | Chloroethane | R | U | | Reported to be adsorbed. | | 90 |
| IX F-10 | Chloroethylene | R | U | | Reported to be adsorbed. | | 90 |
| IX F-11 | Chloroform | I | P S S,M | Not reported | Sorptive capacity (x/m) at residual conc. ($C_f$) of 100 ppb was 1.58 mg/g in pure compound studies, 0.93 in a mixture, and 0.365 in secondary effluent. | Mixture of 6 halocarbons added to sedondary effluent. | 21 |
| IX F-12 | Chloroform | L | W | | At 2 ppm chloroform, equilibrium capacity was 12 mg/g. | See IXF-44 for results. | 46 |
| IX F-13 | Dibromochloromethane | L | W | 3.9 ppb | | See IXF-44 for results. | 46 |
| IX F-14 | Dibromochloromethane | I | P S S,M | Not reported | Sorptive capacity (x/m) at residual conc. ($C_f$) of 100 ppb was 7.52 mg/g in pure compound studies, 4.54 in a mixture, and 0.885 in secondary effluent. | Mixture of 6 halocarbons added to secondary effluent. | 21 |

(continued)

TABLE E-1(continued)

Concentration Process: Activated Carbon (IX)
Chemical Classification: Halocarbons(F)

| No.[a] | Chemical[b] | Description of Study: Study Type[c] | Waste Type[d] | Influent Char. | Results of Study | Comments | Ref. |
|---|---|---|---|---|---|---|---|
| IX F-15 | Dibromochloromethane | R | U | | Reported to be adsorbed. | | 90 |
| IX F-16 | Dichloroethane | P,C | H | 12 ppb | Not detected in effluent after 8.5 min contact time. | 250,000 gal spilled materials treated with EPA mobile treatment trailer. | 6 |
| IX F-17 | Dichloroethane | I | P S S,M | Not reported | Sorptive capacity (x/m) at residual conc.($C_f$) of 100 ppb was 1.07 mg/g in pure compound studies, 0.44 in a mixture, and 0.52 in secondary effluent. | Mixture of 6 halocarbons added to secondary effluent. | 21 |
| IX F-18 | 1,1-Dichloroethane | L | W | 2.3 ppb | | See IXF-44 for results. | 46 |
| IX F-19 | 1,1-Dichloroethane | R | U | | Reported to be adsorbed. | | 90 |
| IX F-20 | 1,2-Dichloroethane | L | W | 2.1 ppb | | See IXF-44 for results. | 46 |
| IX F-21 | 1,2-Dichloroethane | R | U | 1000ppm | 81.1% removal at 0.5% carbon dose. | | 90 |
| IX F-22 | 1,1-Dichloroethylene | R | U | | Reported to be adsorbed. | | 90 |

(continued)

TABLE E-1 (continued)

Concentration Process: Activated Carbon (IX)
Chemical Classification: Halocarbons (F)

| No.[a] | Chemical[b] | Description of Study: Study Type[c] | Waste Type[d] | Influent Char. | Results of Study | Comments | Ref. |
|---|---|---|---|---|---|---|---|
| IX F-23 | 1,2-Dichloro-ethylene | L | W | 0.2 ppb | | See IXF-44 for results. | 46 |
| IX F-24 | 1,2-trans-Dichloro-ethylene | R | U | | Reported to be adsorbed. | | 90 |
| IX F-25 | Dichloro-fluoromethane | R | U | | Reported to be adsorbed. | | 90 |
| IX F-26 | Chlorinated Hydrocarbons | R | U | 4 ppm TOC at 1 MGD | Effluent conc. of 0.05 ppm TOC achievable at contact time of 8 min. | Flow equalization used as pretreatment. | 38 |
| IX F-27 | Dichloro-methane | R | U | | Reported to be adsorbed. | | 90 |
| IX F-28 | 1,2-Dichloro-propane | R | U | 1000 ppm | 92.9% removal at 0.5% carbon dose. | | 90 |
| IX F-29 | 1,2-Dichloro-propylene | R | U | | Reported to be adsorbed. | | 90 |
| IX F-30 | Ethylene Dichloride (EDC) | I | L | 1000 ppm | 81.1% reduction, 189 ppm final conc., 0.163 g/g carbon capacity. Adsorbability found to increase with molecular weight. For compounds of <4 carbons, order of decreasing adsorption was: undissociated organic acids, aldehydes, esters, ketones, alcohols (when | Carbon dose was 5 g/l Westvaco Nuchar. | 35 |

(continued)

TABLE E-1 (continued)

Concentration Process: Activated Carbon (IX)
Chemical Classification: Halocarbons (F)

| No.[a] | Chemical[b] | Description of Study: Study Type[c] | Waste Type[d] | Influent Char. | Results of Study | Comments | Ref. |
|---|---|---|---|---|---|---|---|
| IX F-30 cont | | | | | >4 carbons, alcohols moved ahead of esters), glycols. Aromatics had greatest adsorption. Results of two-component isotherm tests could be predicted from single compound tests; however, in four-component tests, only about 60% of predicted adsorption occurred. Continuous columns produced 60-80% of theoretical isotherm capacity. | | |
| IX F-31 | Ethylene Dichloride (EDC) | I | I | Industrial wastewaters containing numerous halocarbons with predominately EDC at up to 9000ppm | Carbon adsorption capacity to achieve 10 ppm EDC residual ranged from 0.47 to 1.25 gm EDC/gm carbon. Capacity to achieve 0.1 ppm EDC residual ranged from 0.0145 to 0.13 gm EDC/gm carbon. To obtain 0.5 ppm TOC residual, capacity ranged from 0.052 to 0.7 gm TOC/gm carbon. Capacity to achieve 50 ppm TOC residual ranged from 7.0 to 150 gm TOC/gm carbon. | Calgon (Filtrasorb 400), Westvaco (WVG) WITCO, and Barneby-Cheney (BCNB-9377) carbons were used. Capacity was dependent on wastewater being tested and the carbon. | 95 |

(continued)

TABLE E-1(continued)

Concentration Process: Activated Carbon (IX)
Chemical Classification: Halocarbons(F)

| No.[a] | Chemical[b] | Description of Study: Study Type[c] | Waste Type[d] | Influent Char. | Results of Study | Comments | Ref. |
|---|---|---|---|---|---|---|---|
| IX F-32 | Ethylene Dichloride (EDC) | L,C (3 columns in series 20 mm ID by 450mm length | I | Industrial wastewaters containing numerous halocarbons with predominately EDC. TC 1200ppm EDC-6400 to 6800ppm pH->11 total chlorinated hydrocarbons -8000ppm | EDC did not breakthrough (to original concentration) at up to 57 BV; however, reduction dropped below 90% after between 10 and 28 BV as flow increased from ∿0.85 to 2.40 L/sq m. Westvaco WVG performed slightly better than Calgon Filtrasorb 400. Minimum level of effluent TC attainable was 300 ppm. | 100 g of loaded carbon was regenerated with 1 atm of steam for 5 min; after 5 regenerations carbon capacity was 0.186 gm EDC/gm carbon or 93% of fresh carbon. | 95 |
| IX F-33 | Hexachlorobutadiene | B,L | P | 100 ppb | 100% removal; 31% desorbed from carbon by elutriation with solvent | See IXF-4 for additional comments. | 20 |
| IX F-34 | Hexachloroethane | B,L | P | 100 ppb | 100% removal; 98% desorbed from carbon by elutriation with solvent | See IXF-4 for additional comments. | 20 |

(continued)

TABLE E-1 (continued)

Concentration Process: Activated Carbon
Chemical Classification: Halocarbons (F)

| No.[a] | Chemical[b] | Description of Study: Study Type[c] | Waste Type[d] | Influent Char. | Results of Study | Comments | Ref. |
|---|---|---|---|---|---|---|---|
| IX F-35 | Hexachloro-ethane | R | U | | Reported to be adsorbed. | | 90 |
| IX F-36 | Methylene Chloride | P,C | H | 190 ppb | 73% removal with 51 ppb detected in effluent after 8.5 min contact time. | 250,000 gal spilled materials treated with EPA mobile treatment trailer. | 6 |
| IX F-37 | Propylene Dichloride | I | L | 1000 ppm | 92.9% reduction, 71 ppm final conc., 0.183 g/g carbon capacity. | See IXF-32 for additional results. | 35 |
| IX F-38 | Tetrachloro-ethane | B,L | P | 100 ppb | 100% removal; 70% desorbed from carbon by elutriation with solvent. | See IXF-4 for additional comments | 20 |
| IX F-39 | 1,1,2,2-Tetra-chloroethane | R | U | | Reported to be adsorbed. | | 90 |
| IX F-40 | Tetrachloro-ethylene | L | W | 179 ppb | | See IXF-44 for results. | 46 |
| IX F-41 | Tetrachloro-ethylene | R | U | | Reported to be adsorbed. | | 90 |
| IX F-42 | Tribromo-methane | R | U | | Reported to be adsorbed. | | 90 |

(continued)

TABLE E-1(continued)

Concentration Process: Activated Carbon (IX)
Chemical Classification: Halocarbons(F)

| No.[a] | Chemical[b] | Description of Study: Study Type[c] | Waste Type[d] | Influent Char. | Results of Study | Comments | Ref. |
|---|---|---|---|---|---|---|---|
| IX F-43 | Tribromo-methane | I | P S S,M | Not reported | Sorptive capacity(x/m) at residual conc. ($C_f$) of 100 ppb was 28.7 mg/g in pure compound studies, 10.8 in a mixture, and 1.53 in secondary effluent. | Mixture of 6 halocarbons added to secondary effluent. | 21 |
| IX F-44 | 1,1,1-Trichloroethane | L | W | 551 ppb | Performance for treatment of water containing several halogens. Virgin / Regenerated: BV to 33ppb compound leakage 5100 / 4000; Days 13.3 / 10.4; Gal treated/cu ft sorbent 38,250 / 30.000 | Column studies 14mm dia glass tubes, height 4" (15 cu cm adsorbent) Flow-2 gpm/cu ft (16 BV/hr) Regenerated at 37 lb steam/cu ft @5 psig | 46 |
| IX F-45 | 1,1,1-Trichloroethane | R | U | | Reported to be adsorbed. | | 90 |
| IX F-46 | 1,1,2-Tri chloroethane | R | U | | Reported to be adsorbed. | | 90 |

(continued)

TABLE E-1 (continued)

Concentration Process: Activated Carbon (IX)
Chemical Classification: Halocarbons(F)

| No.[a] | Chemical[b] | Description of Study: Study Type[c] | Waste Type[d] | Influent Char. | Results of Study | Comments | Ref. |
|---|---|---|---|---|---|---|---|
| IX F-47 | Trichloro-ethylene (TCE) | P,C | H | 21 ppb | 98.6% removal with 0.3 ppb detected in effluent after 8.5 min contact time. | 250,000 gal spilled materials treated with EPA mobile treatment trailer. | 6 |
| IX F-48 | Trichloro-ethylene | R | U | | Reported to be adsorbed. | | 90 |
| IX F-49 | Trichloro-fluoro-methane | R | U | | Reported to be adsorbed. | | 90 |
| IX F-50 | 1,2,3-Tri-chloropro-pane | B,L | P | 100 ppb | 100% reduction; 35% de-sorbed from carbon by elutriation with solvent | See IXF-4 for additional comments. | 20 |

(continued)

TABLE E-1(continued)

Concentration Process: Activated Carbon (IX)
Chemical Classification: Metals (G)

| No.[a] | Chemical[b] | Description of Study: Study Type[c] | Waste Type[d] | Influent Char. | Results of Study | Comments | Ref. |
|---|---|---|---|---|---|---|---|
| IX G-1 | Arsenic | F,C | M | 1.1 ppb<br>1.8 ppb | No reduction.<br>Increase to 2.4 ppb. | Carbon used as advanced treatment of biologically & chemically treated waste water. Plant capacity 0.66 cu m/sec. Data presented for two time periods. | 64 |
| IX G-2 | Barium | F,C | M | 32 ppb<br>31 ppb | No reduction.<br>No reduction. | See IXG-1 for comments. | 64 |
| IX G-3 | Cadmium | F,C | M | 2.5 ppb<br>1.8 ppb | 12% reduction; 2.2 ppb effluent conc.<br>6% reduction; 1.7 ppb effluent conc. | See IXG-1 for comments. | 64 |
| IX G-4 | Cadmium | P,C | R | 0.029ppm | With virgin Filtrasorb 200 average removal was 19%; w/exhausted FS 200 average removal was 37%. | Study consisted of 8 tests of about 100 hr duration each. | 82 |
| IX G-5 | Chromium | F,C | M | 84.0ppb | 43% reduction; 48.0 ppb effluent conc. | See IXG-1 for comments. | 64 |
| IX G-6 | Chromium | F,C | M | 41.0ppb | 37% reduction; 26.0 ppb effluent conc. | See IXG-1 for comments. | 64 |
| IX G-7 | Chromium$^{+3}$ | L,I | P | 100 ppm | Carbon dose (ppm) / % Removal<br>0 / 0<br>500 / 5<br>1,000 / 7.5 | Test chemical used was $CrCl_3$ with 24 hr carbon contact time. | 72 |

(continued)

TABLE E-1(continued)

Concentration Process: Activated Carbon (IX)
Chemical Classification: Metals (G)

| No.[a] | Chemical[b] | Description of Study: Study Type[c] | Waste Type[d] | Influent Char. | Results of Study | Comments | Ref. |
|---|---|---|---|---|---|---|---|
| IX G-7 cont | | | | | Carbon dose (ppm) / % Removal<br>5,000 — 17.5<br>10,000 — 47.5 | | |
| IX G-8 | Chromium$^{+6}$ | L,I | P | 100 ppm | Carbon dose (ppm) / % Removal<br>0 — 0<br>500 — 16<br>1,000 — 26<br>5,000 — 34<br>10,000 — 36 | 24 hr contact time, test chemical was $K_2Cr_2O_7$ | 72 |
| IX G-9 | Copper | F,C | M | 88 ppb | 69% reduction; 27 ppb effluent conc. | See IXG-1 for comments. | 64 |
| IX G-10 | Copper | F,C | M | 49 ppb | 35% reduction; 32 ppb effluent conc. | See IXG-1 for comments. | 64 |
| IX G-11 | Copper | L,I | P | 100 ppm | Carbon Dose (ppm) / % Removal<br>0 — 0<br>500 — 8<br>1,000 — 10<br>5,000 — 73<br>10,000 — 96.4 | 24 hr contact time, test chemical was $Cu\ SO_4$ | 72 |
| IX G-12 | Iron | F,C | M | 207 ppb | 68% reduction; 66 ppb effluent conc. | See IXG-1 for comments. | 64 |
| | Iron | F,C | M | 40 ppb | Conc increased to 45 ppb in effluent. | See IXG-1 for comments. | 64 |

(continued)

TABLE E-1 (continued)

Concentration Process: Activated Carbon (IX)
Chemical Classification: Metals (G)

| No.[a] | Chemical[b] | Description of Study: Study Type[c] | Waste Type[d] | Influent Char. | Results of Study | Comments | Ref. |
|---|---|---|---|---|---|---|---|
| IX G-14 | Lead | F,C | M | 22 ppb | Conc. increased to 26 ppb | See IXG-1 for comments. | 64 |
| IX G-15 | Lead | F,C | M | 4.7 ppb | Conc. increased to 5.3 ppb. | See IXG-1 for comments. | 64 |
| IX G-16 | Lead | L,I | P | 100 ppm | Carbon dose (ppm) / % Removal: 0 / 0; 500 / 13; 1,000 / 17.7; 5,000 / 84.0; 10,000 / 93.0 | 24 hr contact time, test chemical used $Pb(NO_3)_2$ | 72 |
| IX G-17 | Manganese | F,C | M | 6.2 ppb | 21% reduction; 4.9 ppb effluent conc. | See IXG-1 for comments. | 64 |
| IX G-18 | Manganese | F,C | M | 2.3 ppb | Conc. increased to 4.1 ppb. | See IXG-1 for comments. | 64 |
| IX G-19 | Manganese | L,I | P | 100 ppb | Carbon dose (ppm) / % Removal: 0 / 0; 500 / 1; 1,000 / 3; 5,000 / 25; 10,000 / 50 | 24 hr contact time, test chemical used was $MnCl_2$. | 72 |
| IX G-20 | Mercury | F,C | M | 3.6 ppb | Conc. increased to 6.7 ppb. | See IXG-1 for comments. | 64 |

(continued)

TABLE E-1(continued)

Concentration Process: Activated Carbon (IX)
Chemical Classification: Metals (G)

| No.[a] | Chemical[b] | Description of Study: Study Type[c] | Waste Type[d] | Influent Char. | Results of Study | Comments | Ref. |
|---|---|---|---|---|---|---|---|
| IX G-21 | Mercury | F,C | M | 1.2 ppb | Conc. increased to 4.9 ppb. | See IXG-1 for comments. | 64 |
| IX G-22 | Mercury | L,I | P | 100 ppm | Carbon Dose (ppm) / % Removal: 0 / 0; 500 / 99; 1,000 / 99; 5,000 / 99; 10,000 / 99 | 24 hr contact time, test chemical used was $HgCl_2$. | 72 |
| IX G-23 | Mercury | U | U | 10 ppb | 80% reduction achieved with carbon dose of 100 Mg/l. PAC + chelating agent. | Efficiency of reduction was dependent on pH. Optimum pH was 7.0. Tannic Acid and Citric Acid were ineffective as chelating agents. | 87 |
| IX G-24 | Mercury | R | U | | 80% reduction by PAC & Alum Coagulation. | GAC reduction of Hg enhanced by use of chelating agent. | 90 |
| IX G-25 | Nickel | L,I | P | 100 ppm | Carbon dose (ppm) / % Removal: 0 / 0; 500 / 4; 1,000 / 5; 5,000 / 10.5; 10,000 / 52 | 24 hr contact time, test chemical used was $NiCl_2$. | 72 |
| IX G-26 | Selenium | R | U | 500 ppm | GAC treatment after Lime ppt. yielded 96% reduction. | | 90 |

(continued)

TABLE E-1(continued)

Concentration Process: Activated Carbon (IX)
Chemical Classification: Metals (G)

| No.[a] | Chemical[b] | Description of Study | | | Results of Study | Comments | Ref. |
|---|---|---|---|---|---|---|---|
| | | Study Type[c] | Waste Type[d] | Influent Char. | | | |
| IX G-27 | Thallium | R | U | | GAC treatment after Lime ppt. yielded 84% reduction. | | 90 |
| IX G-28 | Zinc | F,C | M | 670 ppb | 81% reduction; 124 ppb effluent conc. | See IXG-1 for comments. | 64 |
| IX G-29 | Zinc | F,C | M | 412 ppb | 61% reduction; 162 ppb effluent conc. | See IXG-1 for comments. | 64 |

(continued)

TABLE E-1(continued)

Concentration Process: Activated Carbon (IX)
Chemical Classification: Polychlorinated Biphenyls (I)

| No.[a] | Chemical[b] | Description of Study | | | Results of Study | Comments | Ref. |
|---|---|---|---|---|---|---|---|
| | | Study Type[c] | Waste Type[d] | Influent Char. | | | |
| IX I-1 | PCB's (Unspecified) | C,P | H | 19 ppb | Not detectable in effluent with 60 min contact time. | Treatment by EPA trailer. | 6 |
| IX I-2 | PCB's (Unspecified) | C,P | H | 400 ppb @ 0.6 MG treated | Not detectable in effluent with 30-40 min contact time. | See IXI-1 for comments. | 6 |
| IX I-3 | PCB's (Unspecified) | C,P | H | 1.0 ppb @ 12 MG treated | Not detectable in effluent with 8.5 min contact time. | See IXI-1 for comments. | 6 |
| IX I-4 | Arochlor 1242 | L,B,I | P | 45 ppb | <0.5 ppb final conc. carbon capacity was 25 mg/g. | Pulverized FS-300 | 8 |
| IX I-5 | Arochlor 1242 | I | P | 45 ppb | 4.3 mg/g capacity for a 1.1 ppb final conc. | | 22 |
| IX I-6 | Arochlor 1242 | I | S | 45 ppb | 25 mg/g capacity for a <0.5 ppb final conc. | | 38 |
| IX I-7 | Arochlor 1242 | I | I | 45 ppb | 25 mg/g capacity for a <0.5 ppb final conc. | | 66 |
| IX I-8 | Arochlor 1254 | L,B,I | P | 49 ppb | 72 mg/g of carbon capacity for a final conc. of <0.5 ppb | Pulverized FS-300 used. | 8 |
| IX I-9 | Arochlor 1254 | I | P | 160 ppb | 15.75 mg/g capacity for 98.5% reduction. | | 22 |
| IX I-10 | Arochlor 1254 | I | P | 11.15ppb and 37.5 ppb | 0.37 mg/g capacity for 99% reduction. | | 22 |

(continued)

TABLE E-1 (continued)

Concentration Process: Activated Carbon (IX)
Chemical Classification: Polychlorinated Biphenyls (I)

| No.[a] | Chemical[b] | Description of Study: Study Type[c] | Waste Type[d] | Influent Char. | Results of Study | Comments | Ref. |
|---|---|---|---|---|---|---|---|
| IX I-11 | Arochlor 1254 | C,L | P | 0.25 ppb at 100ml per hr | <0.05 ppb final conc. for 240 BV. | Experiment lasted 5 days. | 22 |
| IX I-12 | Arochlor 1254 | F,C | P | 50 ppb | <1.0 ppb final effluent at 0.006 lb/lb capacity. | Cost estimate for full scale columns are $0.65/100 gal at 0.25 Mgd. | 22 |
| IX I-13 | Arochlor 1254 | I | P | 49 ppb | 1.0 mg/g capacity for 1.2 ppb effluent. | | 22 |
| IX I-14 | Arochlor 1254 | I | S | 49 ppb pH=7.0 | 7.2 mg/g capacity for final conc. of 0.5 ppb. | | 38 |
| IX I-15 | Arochlor 1254 | I | I | 49 ppb | See IXI-13 results | | 66 |
| IX I-16 | Arochlor 1254 | B,L | P | 100 ppb | 94.4% average reduction; 14% desorbed from carbon by elutriation w/solvent | FS-300 used. Solvents included pentane-acetone, diethyl ether, methylene chloride-acetone, chloroform-acetone, acetone. | 20 |

(continued)

TABLE E-1 (continued)

Concentration Process: Activated Carbon (IX)
Chemical Classification: Pesticides (J)

| No.[a] | Chemical[b] | Description of Study: Study Type[c] | Waste Type[d] | Influent Char. | Results of Study | Comments | Ref. |
|---|---|---|---|---|---|---|---|
| IX J-1 | Aldrin | B,L | P | 100 ppb | 100% reduction; 2% desorbed by elutriation with solvent. | Calgon FS-300 used. | 20 |
| IX J-2 | Aldrin | I | S | 48 ppb | 30 mg/g of carbon capacity for a final conc. of <1.0 ppb. | pH = 7.0 | 38 |
| IX J-3 | Aldrin | L,B,I | P | 48 ppb | 30 mg/g of carbon capacity for a final conc. of <1.0 ppb. | Pulverized FS-300 | 8 |
| IX J-4 | Aldrin | C,P | H | 8.5 ppb @ 0.1 MG treated | 98% reduction w/17 min contact time. | Treated by EPA mobile trailer. | 6 |
| IX J-5 | Aldrin | C,P | H | 60.5 ppb @ 3000 gal treated. | 99.8% reduction w/240 min contact time. | See IXJ-4 for comments. | 6 |
| IX J-6 | 2,4-D butyl ester | L,B | P | 100 ppb | 100% reduction; 10% desorbed from carbon by elutriation w/solvent. | Calgon FS-300 used. | 20 |
| IX J-7 | Chlordane | C,P | H | 13 ppb @ 1.0 MG treated | 97.3 reduction; w/17 min contact time. | See IXJ-4 for comments. | 6 |
| IX J-8 | Chlordane | C,P | H | 1430 ppb @ 3000 gal treated | 99.99% reduction; w/240 min contact time. | See IXJ-4 for comments. | 6 |
| [illegible] | DDD | I | S | 56 ppb pH = 7.0 | 130 mg/g carbon capacity for a final conc. of 0.1 ppb. | | 38 |
| [illegible] | DDD | I | P | 56 ppb | See IXJ-9 results. | Pulverized FS-300 used. | 8 |

(continued)

TABLE E-1 (continued)

Concentration Process: Activated Carbon (IX)
Chemical Classification: Pesticides (J)

| No.[a] | Chemical[b] | Description of Study: Study Type[c] | Waste Type[d] | Influent Char. | Results of Study | Comments | Ref. |
|---|---|---|---|---|---|---|---|
| IX J-11 | DDD | I | I | 56 ppb pH=7.0 | See IXJ-9 results. | | 66 |
| IX J-12 | DDE | I | I | 38 ppb ph=7.0 | 9.4 mg/g carbon capacity for a final conc. of <1.0 ppb. | | 66 |
| IX J-13 | DDE | I | P | 38 ppb | See IXJ-12 results. | Pulverized FS-300 used. | 8 |
| IX J-14 | DDE | I | S | 38 ppb pH=7.0 | See IXJ-12 results. | | 38 |
| IX J-15 | DDT | I | S | 41 ppb pH=7 | 11 mg/g of carbon capacity for a final conc. of 0.1 ppb | | 38 |
| IX J-16 | DDT | L,B,I | P | 41 ppb | 11 mg/g of carbon capacity for a final conc. of 0.15 ppb. | Pulverized FS-300 | 8 |
| IX J-17 | DDT | C,L,R | P,R | 10 ppb | Greater than 99% reduction achieved. | Cumulative removal following prechlorination and coagulation-filtration | 6 |
| IX J-18 | DDT | B,L | P | 100 ppb | 100% reduction; 51% desorbed from carbon by elutriation w/solvent. | Calgon FS-300 | 20 |
| IX J-19 | DDT | I | I | 41 ppb pH=7 | See IXJ-15 results. | | 66 |
| IX J-20 | Dieldrin | I | S | 19 ppb | 15 mg/g carbon capacity for a final conc. of 0.05 ppb. | | 38 |

(continued)

TABLE E-1 (continued)

Concentration Process: Activated Carbon (IX)
Chemical Classification: Pesticides (J)

| No.[a] | Chemical[b] | Description of Study: Study Type[c] | Waste Type[d] | Influent Char. | Results of Study | Comments | Ref. |
|---|---|---|---|---|---|---|---|
| IX J-21 | Dieldrin | L,B,I | P | 19 ppb | 15 mg/g carbon capacity for a final conc. of 0.08 ppb. | Pulverized FS-300 | 8 |
| IX J-22 | Dieldrin | C,P | H | 11 ppb @ 0.1MG treated | No detectable level in effluent w/17 min contact time. | Treated by EPA mobile trailer. | 6 |
| IX J-23 | Dieldrin | C,P | H | 60.5ppb @ 3000 gal treated. | No detectable level in effluent w/240 min contact time. | See IXJ-22 for comments. | 6 |
| IX J-24 | Dieldrin | B,L,R | P,R | 10 ppb | Carbon Conc. / % Removal<br>5 mg/l 75<br>10 mg/l 85<br>20 mg/l 92 | Cumulative removal following prechlorination & coagulation-sedimentation. | 6 |
| IX J-25 | Dieldrin | C,L,R | P,R | 10 ppb @ 0.5 gpm/ft$^3$ | Greater than 99% reduction achieved. | See IXJ- 24 for comments. | 6 |
| IX J-26 | Dieldrin | I | I | 19 ppb pH=7.0 | See IXJ-10 results. | | 66 |
| IX J-27 | Endrin | I | I | 62 ppb pH=7.0 | 100 mg/g carbon capacity for a final conc. of 0.05 ppb. | | 66 |
| IX J-28 | Endrin | L,B,I | P | 62 ppb | 100 mg/g carbon capacity for a final conc. of 0.07 ppb | Pulverized FS-300 | 8 |
| IX [illegible] | Endrin | B,L,R | P,R | 10 ppb | Carbon Conc. / % Removal<br>5 mg/l 80<br>10 mg/l 90<br>20 mg/l 94 | See IXJ-24 for comments. | 6 |

(continued)

TABLE E-1 (continued)

Concentration Process: Activated Carbon (IX)
Chemical Classification: Pesticides (J)

| No.[a] | Chemical[b] | Description of Study: Study Type[c] | Waste Type[d] | Influent Char. | Results of Study | Comments | Ref. |
|---|---|---|---|---|---|---|---|
| IX J-30 | Endrin | C,L,R | P,R | 10 ppb @ 0.5 gpm/ft$^3$ | Greater than 99% reduction achieved. | See IXJ-24 for comments. | 6 |
| IX J-31 | Endrin | I | S | 62 ppb pH = 7.0 | See IXJ-27 results. | | 38 |
| IX J-32 | Heptachlor | C,P | H | 6.1 ppb @ 0.1 MG treated | 99% reduction w/17 min contact time. | Treated by EPA mobile trailer. | 6 |
| IX J-33 | Heptachlor | C,P | H | 80 ppb @ 3000 gal treated | 99.9% reduction w/240 min contact time. | Treated by EPA mobile trailer. | 6 |
| IX J-34 | Herbicides (unspecified) | R | U | 10,000 ppm TOC @ 0.02 MGD | 99% TOC reduction achieved w/412 min contact time. | Pretreatment included pH adjustment. | 38 |
| IX J-35 | Herbicides (unspecified) | R | U | 1500 ppm TOC @ 0.02 MGD | 90% TOC reduction achieved w/412 min contact time. | Pretreatment included settling and filtration | 38 |
| IX J-36 | Kepone | C,P | H | 4000 ppb @ 0.225MG treated | No detectable levels in effluent w/45 min contact time. | Treated by EPA mobile trailer. | 6 |
| IX J-37 | Lindane | B,L,R | P,R | 10 ppb | Carbon Conc. / % Removal<br>5 mg/l / 30<br>10 mg/l / 55<br>20 mg/l / 80 | See IXJ-24 for comments. | 6 |

(continued)

TABLE E-1 (continued)

Concentration Process: Activated Carbon (IX)
Chemical Classification: Pesticides (J)

| No.[a] | Chemical[b] | Description of Study: Study Type[c] | Waste Type[d] | Influent Char. | Results of Study | Comments | Ref. |
|---|---|---|---|---|---|---|---|
| IX J-38 | Lindane | C,L,R | P,R | 10 ppb @ 0.5 gpm/ft$^3$ | Greater than 99% reduction achieved. | See IXJ-24 for comments. | 6 |
| IX J-39 | Parathion | B,L,R | P,R | 10 ppb | Carbon Conc. / % Removal<br>5 mg/l >99<br>10 mg/l >99<br>20 mg/l >99 | See IXJ-24 for comments. | 6 |
| IX J-40 | Parathion | C,L,R | P,R | 10 ppb | Greater than 99% reduction achieved. | See IXJ-24 for comments. | 6 |
| IX J-41 | 2,4,5-T ester | B,L,R | P,R | 10 ppb | Carbon Conc. / % Removal<br>5 mg/l 80<br>10 mg/l 90<br>20 mg/l 95 | See IXJ-24 for comments. | 6 |
| IX J-42 | 2,4,5-T ester | C,L,R | P,R | 10 ppb @ 0.5 gpm/ft$^3$ | Greater than 99% reduction achieved. | See IXJ-24 for comments. | 6 |
| IX J-43 | Toxaphene | C,P | P | 36 ppb @ 0.25 MG treated | 97% reduction w/26 min contact time. | Treated by EPA mobile trailer. | 6 |
| IX J-44 | Toxaphene | L,B,I | P | 155 ppb | 42 mg/g carbon capacity for a final conc. of <1.0 ppb. | Pulverized FS-300. | 8 |
| IX J-45 | Toxaphene | I | S | 155 ppb | See IXJ-44 results. | | 38 |

(continued)

TABLEE -1 (continued)

Concentration Process: Activated Carbon (IX)
Chemical Classification: Phenols(K)

| No.[a] | Chemical[b] | Description of Study: Study Type[c] | Waste Type[d] | Influent Char. | Results of Study | Comments | Ref. |
|---|---|---|---|---|---|---|---|
| IX K-1 | Butyl Phenol | C,P | H | 300 ppb | 95% reduction w/8.5 min contact time. | 250,000 gal spill treated by EPA mobile treatement trailer. | 6 |
| IX K-2 | 4-Chloro-3-Methyl-phenol | B,L | P | 100 ppb | 100% reduction; 10% desorbed from carbon by elutriation w/solvent. | Calgon FS-300 used. Solvents included pentane-acetone, diethyl ether, methylene chloride-acetone, chloroform-acetone and acetone. | 20 |
| IX K-3 | Cresol | C,P | H | 230 ppb | 96.5% reduction w/8.5 min contact time. | 250,000 gal spill treated by EPA mobile treatment trailer. | 6 |
| IX K-4 | 2,3-Dichloro phenol | B,L | P | 100 ppb | 100% reduction; 14% desorbed from carbon by elutriation w/solvent. | See IXK-2 for comments. | 20 |
| IX K-5 | Dimethyl-phenol | C,P | H | 1220 ppb | 99.6% reduction w/8.5 min contact time. | See IXK-3 for comments. | 6 |
| IX K-6 | 3,5-Dimethyl phenol | B,L | P | 100 ppb | 100% reduction; 5% desorbed from carbon by elutriation w/solvent. | See IXK-2 for comments. | 20 |
| IX K-7 | 2,4-Dinitro-phenol | I | P | | For pH=3.0: Carbon capacity=405mg/g, K =168, 1/n =0.38, r =0.99 | | 21 |

(continued)

TABLE E-1(continued)

Concentration Process: Activated Carbon (IX)
Chemical Classification: Phenols(K)

| No.[a] | Chemical[b] | Description of Study: Study Type[c] | Waste Type[d] | Influent Char. | Results of Study | Comments | Ref. |
|---|---|---|---|---|---|---|---|
| IX K-7 cont | | | | | For pH=7.0:<br>Carbon capacity=160mg/g<br>K =18<br>1/n =0.95<br>r =0.94<br><br>For pH=9.0:<br>Carbon capacity=75 mg/g<br>K =41<br>1/n =0.25<br>r =0.87 | | |
| IX K-8 | Nonylphenol | I | P | | For pH=3.0:<br>Carbon capacity=570mg/g<br>K =55<br>1/n =1.03<br>r =0.97<br><br>For pH=7.0:<br>Carbon capacity=595mg/g<br>K =254<br>1/n =0.37<br>r =0.98<br><br>For pH=9.0:<br>Carbon capacity=275mg/g<br>K =148<br>1/n =0.27<br>r =0.98 | | 21 |
| IX [illegible] | [illegible]ntachloro-phenol | I | P | | For pH=3.0:<br>Carbon capacity=635mg/g<br>K =260<br>1/n =0.4<br>r =0.98 | | 21 |

(continued)

TABLE E-1(continued)

Concentration Process: Activated Carbon (IX)
Chemical Classification: Phenols(K)

| No.[a] | Chemical[b] | Description of Study: Study Type[c] | Waste Type[d] | Influent Char. | Results of Study | Comments | Ref. |
|---|---|---|---|---|---|---|---|
| IX K-9 cont | | | | | For pH=7.0:<br>Carbon capacity=385mg/g<br>K =145<br>1/n =0.42<br>r =0.98<br><br>For pH=9.0:<br>Carbon capacity=260mg/g<br>K =100<br>1/n =0.41<br>r =0.98 | | |
| IX K-10 | Pentachloro-phenol | C,P | H | 10 ppm | Not detectable in effluent after 26 min contact time. | 215,000 gal treated by EPA mobile treatment trailer. | 6 |
| IX K-11 | Phenol | B,L | P | 100 ppb | 100% reduction; 6% desorbed from carbon by elutriation w/solvent. | See IXK-2 for comments. | 20 |
| IX K-12 | Phenol | I | P | | For pH=3.0:<br>Carbon capacity=85 mg/g<br>K =12<br>1/n =0.38<br>r =0.92<br><br>For pH=7.0:<br>Carbon capacity=80 mg/g<br>K =13<br>1/n =0.77<br>r =0.91<br><br>For pH=9.0:<br>Carbon capacity=70 mg/g<br>K =22 | | 21 |

(continued)

TABLE E-1 (continued)

Concentration Process: Activated CArbon (IX)
Chemical Classification: Phenols(K)

| No.[a] | Chemical[b] | Description of Study: Study Type[c] | Waste Type[d] | Influent Char. | Results of Study | Comments | Ref. |
|---|---|---|---|---|---|---|---|
| IX K-12 cont | | | | | 1/n =0.49<br>r =0.94 | | |
| IX K-13 | Phenol | I | P | 1.0 ppm | Adsorption capacity 21 mg/g | | 21 |
| IX K-14 | Phenol | C,P | H | 140 ppb | 100% reduction w/8.5 min contact time. | See IXK-3 for comments. | 6 |
| IX K-15 | Phenol | L,I | P | 100 ppm<br>500 ppm<br>1000 ppm | 99% reduction<br>99% reduction<br>99% reduction | 24 hr contact time time w/carbon dose of 10x phenol conc. | 72 |
| IX K-16 | Phenol | I | S | 1000 ppm | 80% reduction; 194 ppm final conc., 161 mg/g carbon capacity. | | 35 |
| IX K-17 | Phenol | R | U | 200 ppm @ 0.05 MGD | Effluent conc. of 0.01 ppm achievable at contact time of 165 min. | Settling,equalization & mixed media filtration used as pretreatment. | 38 |
| IX K-18 | Phenol | R | U | 600 ppm @ 0.2MGD | Effluent conc. of 100ppm achievable at contact time of 41 min. | Equalization used as pretreatment. | 38 |
| IX K-19 | Phenol | R | U | 800 ppm @0.15MGD | Effluent con. of 0.05ppm achievable at contact time of 24 min. | Biological & mixed media filtration used as pretreatment | 38 |
| IX K-20 | Phenol | R | U | 1200 ppm @0.15MGD | Effluent conc. of 1.0ppm achievable at contact time of 55 min. | Sand filtration & settling used as pretreatment. | 38 |

(continued)

TABLE E-1(continued)

Concentration Process: Activated Carbon (IX)
Chemical Classification: Phenols (K)

| No.[a] | Chemical[b] | Description of Study: Study Type[c] | Waste Type[d] | Influent Char. | Results of Study | Comments | Ref. |
|---|---|---|---|---|---|---|---|
| IX K-21 | Phenol | R | U | 80 ppm @ 0.3MGD | Effluent conc. of 1.0ppm achievable at contact time of 33 min. | Biological, settling & multi media filtration used as pretreatment. | 38 |
| IX K-22 | Phenol | R | U | 1000 ppm | 80.6% reduction achieved | 500 mg/l carbon dose used. | 90 |
| IX K-23 | Phenol | B,L | P | 100 ppb | 100% reduction; 6% desorbed from carbon by elutriation w/solvent. | See IXK-2 for comments. | 20 |
| IX K-24 | Resorcinol | B,L | P | 100 ppb | 100% reduction; 0% desorbed from carbon by elutriation w/solvent. | See IXK-2 for comments. | 20 |
| IX K-25 | 2,4,6-Trichlorophenol | B,L | P | 100 ppb | 100% reduction; 0% desorbed from carbon by elutriation w/solvent. | See IXK-2 for comments. | 20 |
| IX K-26 | Trimethylphenol | C,P | H | 130 ppb | 92% reduction w/8.5 min contact time. | See IXK-3 for comments. | 6 |

(continued)

TABLE E-1 (continued)

Concentration Process: Activated Carbon (IX)
Chemical Classification: Phthalates (L)

| No.[a] | Chemical[b] | Description of Study: Study Type[c] | Waste Type[d] | Influent Char. | Results of Study | Comments | Ref. |
|---|---|---|---|---|---|---|---|
| IX L-1 | Bis(2-ethyl-hexyl)Phthalate | B | I | 1300 ppb @ 1.0gpm/ft$^2$ | Final conc. of <22 ppb achievable at 90 min EBCT. | TOC conc. of influent was 15000 ppm; estimated cost excluding pretreatment was $27.00/1000 gal | 5 |
| IX L-2 | Bis(2-Ethyl-hexyl)Phthalate | R | U | | Reduction by flocculation w/$Al_2(SO_4)_3$ improved w/granular activated carbon pretreatment. | | 90 |
| IX L-3 | Dibutyl Phthalate | B,L | P | 100 ppb | 100% reduction; 38% desorbed from carbon by elutriation w/solvent. | Calgon FS-300 used. Solvents included pentane-acetone, diethyl ether, methylene chloride-acetone, chloroform-acetone and acetone. | 20 |
| IX L-4 | Dimethyl Phthalate | B,L | P | 100 ppb | 100% reduction; 13% desorbed from carbon by elutriation w/solvent. | See IXL-3 for comments. | 20 |

(continued)

TABLE E-1(continued)

Concentration Process: Activated Carbon (IX)
Chemical Classification: Polynuclear Aromatics (M)

| No.[a] | Chemical[b] | Description of Study: Study Type[c] | Waste Type[d] | Influent Char. | Results of Study | Comments | Ref. |
|---|---|---|---|---|---|---|---|
| IX M-1 | Biphenyl | B,L | P | 100 ppb | 100% reduction; 2% desorbed from carbon by elutriation w/solvent. | Calgon FS-300 used. Solvents included pentane-acetone, diethyl ether, methylene chloride-acetone, chloroform-acetone and acetone. | 20 |
| IX M-2 | Cumene | B,L | P | 100 ppb | 100% reduction; 8% desorbed from carbon by elutriation w/solvent. | See IXM-1 for comments. | 20 |
| IX M-3 | Dimethyl-Naphthalene | B,L | P | 100 ppb | 80% reduction; 11% desorbed from carbon by elutriation w/solvent. | See IXM-1 for comments. | 20 |
| IX M-4 | 1,1-Diphenyl-hydrazine | I | P | pH=7.5 | Isotherm kinetics were as follows:<br>Carbon / K / 1/n<br>Darco / 94.8 / 0.279<br>Filtrasorb / 149.0 / 0.232<br>Carbon dose (mg/l) required to reduce 1.0 mg/l to 0.1mg/l:<br>Darco - 18.0<br>Filtrasorb - 10.0 | | 31 |
| IX M-5 | Fluoranthrene | B,L | P | 100 ppb | 80% reduction; 5% desorbed from carbon by elutriation w/solvent. | See IXM-1 for comments. | 20 |
| IX M-6 | Napthalene | I | P | | Isotherm kinetics were as follows:<br>Carbon / K / 1/n<br>Darco / 62.8 / 0.30<br>Filtrasorb / 1.69 / 0.56 | | 31 |

(continued)

TABLE E-1 (continued)

Concentration Process: Activated Carbon (IX)
Chemical Classification: Polynuclear Aromatics (M)

| No.[a] | Chemical[b] | Description of Study: Study Type[c] | Waste Type[d] | Influent Char. | Results of Study | Comments | Ref. |
|---|---|---|---|---|---|---|---|
| IX M-6 cont | | | | | Carbon dose (mg/l) required to reduce 1.0mg/l to 0.1mg/l: Darco - 29.0 Filtrasorb - 19.0 | | |
| IX M-7 | Napthalene | F,C | M | Conc. not reported | 70% reduction achieved in carbon treatment phase. | Carbon used as advanced treatment of biologically & chemically treated wastewater. Plant capacity 0.66 $M^3$/sec. | 64 |
| IX M-8 | Phenanthrene | B,L | P | 100 ppb | 80% reduction; 6% desorbed from carbon by elutriation w/solvent. | See IXM- 1 for comments. | 20 |
| IX M-9 | Pyrene | B,L | P | 100 ppb | 80% reduction; 5% desorbed from carbon by elutriation w/solvent. | See IXM- 1 for comments. | 20 |

(continued)

TABLE E-1 (continued)

Concentration Process: Resin Adsorption (X)
Chemical Classification: Alcohols (A)

| No.[a] | Chemical[b] | Description of Study: Study Type[c] | Waste Type[d] | Influent Char. | Results of Study | Comments | Ref. |
|---|---|---|---|---|---|---|---|
| XA-1 | Butanol | B,L | P | 100 µg/l | Complete removal. 38% desorption of butanol by elutriation with solvent was achieved. | Resin was Amberlite XAD-2. Resin found to be more effective than carbon for phthalate esters, most aromatics, and pesticides. Carbon was more efficient for alkanes; neither effective for acidic compounds. | 20 |
| XA-2 | Cyclohexanol | B,L | P | 100 µg/l | Complete removal. 81% desorption of cyclohexanol by elutriation with solvent was achieved. | See XA-1 for additional results. | 20 |
| XA-3 | Decanol | B,L | P | 100 µg/l | Complete removal. 89% desorption of decanol by elutriation with solvent was achieved. | See XA-1 for additional results. | 20 |
| XA-4 | 2-Ethyl-1-Hexanol | B,L | P | 100 µg/l | Complete removal. 100% desorption of 2-Ethyl-1-Hexanol by elutriation with solvent was achieved. | See XA-1 for additional results. | 20 |
| XA-5 | m-Heptanol | B,L | P | 100 µg/l | Complete removal. 100% desorption of n-Heptanol by elutriation with solvent was achieved. | See XA-1 for additional results. | 20 |
| XA-6 | Octanol | B,L | P | 100 µg/l | Complete removal. Greater than 100% desorption of Octanol by elutriation with solvent was reported. | See XA-1 for additional results. | 20 |

(continued)

TABLE E-1(continued)

Concentration Process: Resin Adsorption (X)
Chemical Classification: Alcohols (A)

| No.[a] | Chemical[b] | Description of Study | | | Results of Study | Comments | Ref. |
|---|---|---|---|---|---|---|---|
| | | Study Type[c] | Waste Type[d] | Influent Char. | | | |
| XA-7 | Pentanol | B,L | P | 100 µg/l | Complete removal. 67% desorption of pentanol by elutriation with solvent was achieved. | See XA-1 for additional results. | 20 |
| XA-8 | Propanol | B,L | P | 100 µg/l | Complete removal. Propanol could not be desorbed by elutriation with solvent. | See XA-1 for additional results. | 20 |

(continued)

TABLE E-1 (continued)

Concentration Process: Resin Adsorption (X)
Chemical Classification: Aliphatics (B)

| No.[a] | Chemical[b] | Description of Study: Study Type[c] | Waste Type[d] | Influent Char. | Results of Study | Comments | Ref. |
|---|---|---|---|---|---|---|---|
| XB-1 | Butyric Acid | B,L | P | 100 µg/l | 100% reduction; no desorption from resin by elutriation with solvent. | Resin was Amberlite XAD-2. Resin found to be more effective than carbon for phthalate esters, most aromatics, and pesticides; carbon more efficient for alkanes; neither effective for acidic compounds. | 20 |
| XB-2 | Caproic Acid | B,L | P | 100 µg/l | 50% reduction; 6% desorption from resin by elutriation with solvent. | See XB-1 for additional results. | 20 |
| XB-3 | Decanoic Acid | B,L | P | 100 µg/l | 100% reduction; No desorption from resin by elutriation with solvent. | See XB-1 for additional results. | 20 |
| XB-4 | Dodecane | B,L | P | 100 µg/l | 25% reduction; No desorption from resin by elutriation with solvent. | See XB-1 for additional results. | 20 |
| XB-5 | Heptanoic Acid | B,L | P | 100 µg/l | 50% reduction; 4% desorption from resin by elutriation with solvent. | See XB-1 for additional results. | 20 |
| XB-6 | Hexadecane | B,L | P | 100 µg/l | 25% reduction; No desorption from resin by elutriation with solvent. | See XB-1 for additional results. | 20 |
| XB-7 | Lauric Acid | B,L | P | 100 µg/l | 100% reduction; No desorption from resin by elutriation with solvent. | See XB-1 for additional results. | 20 |
| XB-8 | Methyl Decanoate | B,L | P | 100 µg/l | 100% reduction; 50% desorption from resin by elutriation with solvent. | See XB-1 for additional results. | 20 |

(continued)

TABLE E-1 (continued)

Concentration Process: Resin Adsorption (X)
Chemical Classification: Aliphatics (B)

| No.[a] | Chemical[b] | Description of Study: Study Type[c] | Waste Type[d] | Influent Char. | Results of Study | Comments | Ref. |
|---|---|---|---|---|---|---|---|
| XB-9 | Methyl Dodecanoate | B,L | P | 100 µg/l | 100% reduction; 72% desorption from resin by elutriation with solvent. | See XB-1 for additional results. | 20 |
| XB-10 | Methyl Hexadecanoate | B,L | P | 100 µg/l | 100% reduction; 67% desorption from resin by elutriation with solvent. | See XB-1 for additional results. | 20 |
| XB-11 | Methyl Octadecanoate | B,L | P | 100 µg/l | 100% reduction; 54% desorption from resin by elutriation with solvent. | See XB-1 for additional results. | 20 |
| XB-12 | Myristic Acid | B,L | P | 100 µg/l | 100% reduction; No desorption from resin by elutriation with solvent. | See XB-1 for additional results. | 20 |
| XB-13 | Octadecane | B,L | P | 100 µg/l | 25% reduction; No desorption from resin by elutriation with solvent. | See XB-1 for additional results. | 20 |
| XB-14 | Octanoic Acid | B,L | P | 100 µg/l | 90% reduction; No desorption from resin by elutriation with solvent. | See XB-1 for additional results. | 20 |
| XB-15 | Propionic Acid | B,L | P | 100 µg/l | 100% reduction; No desorption from resin by elutriation with solvent. | See XB-1 for additional results. | 20 |
| XB-16 | Pyruvic Acid | B,L | P | 100 µg/l | 100% reduction; No desorption from resin by elutriation with solvent. | See XB-1 for additional results. | 20 |
| XB-17 | Tetradecane | B,L | P | 100 µg/l | 50% reduction; 23% desorption from resin by elutriation with solvent. | See XB-1 for additional results. | 20 |
| [illegible] | Valeric Acid | B,L | P | 100 µg/l | 50% reduction; 2% desorption from resin by elutriation with solvent. | See XB-1 for additional results. | 20 |

(continued)

TABLE E-1 (continued)

Concentration Process: Resin Adsorption (X)
Chemical Classification: Amines (C)

| No.[a] | Chemical[b] | Description of Study: Study Type[c] | Waste Type[d] | Influent Char. | Results of Study | Comments | Ref. |
|---|---|---|---|---|---|---|---|
| XC-1 | Aniline | B,L | P | 100 µg/l | Complete removal; No desorption from resin by elutriation with solvent. | Resin was Amberlite XAD-2. Resin found to be more effective than carbon for phthalate esters, most aromatics, and pesticides; carbon was more efficient for alkanes; neither effective for acidic compounds. | 20 |
| XC-2 | Butylamine | B,L | P | 100 µg/l | Complete removal; 74% desorption from resin by elutriation with solvent. | See XC-1 for additional results. | 20 |
| XC-3 | Cyclohexylamine | B,L | P | 100 µg/l | Complete removal; 94% desorption from resin by elutriation with solvent. | See XC-1 for additional results. | 20 |
| XC-4 | Dibutylamine | B,L | P | 100 µg/l | Complete removal; 62% desorption from resin by elutriation with solvent. | See XC-1 for additional results. | 20 |
| XC-5 | Dihexylamine | B,L | P | 100 µg/l | Complete removal; 11% desorption from resin by elutriation with solvent. | See XC-1 for additional results. | 20 |
| XC-6 | Dimethylamine | B,L | P | 100 µg/l | 100% removal; 50% desorption from resin by elutriation with solvent. | See XC-1 for additional results. | 20 |
| XC-7 | Hexylamine | B,L | P | 100 µg/l | 100% removal; 110% desorption from resin by elutriation with solvent. | See XC-1 for additional results. | 20 |

(continued)

TABLE E-1 (continued)

Concentration Process: Resin Adsorption (X)
Chemical Classification: Amines (C)

| No.[a] | Chemical[b] | Description of Study: Study Type[c] | Waste Type[d] | Influent Char. | Results of Study | Comments | Ref. |
|---|---|---|---|---|---|---|---|
| XC-8 | Morpholine | B,L | P | 100 µg/l | 100% removal; 28% desorption from resin by elutriation with solvent. | See XC-1 for additional results. | 20 |
| XC-9 | Octylamine | B,L | P | 100 µg/l | 100% removal; 15% desorption from resin by elutriation with solvent. | See XC-1 for additional results. | 20 |
| XC-10 | Piperidine | B,L | P | 100 µg/l | 100% removal; 42% desorption from resin by elutriation with solvent. | See XC-1 for additional results. | 20 |
| XC-11 | Pyrrole | B,L | P | 100 µg/l | 100% removal; 5% desorption from resin by elutriation with solvent. | See XC-1 for additional results. | 20 |
| XC-12 | Tributylamine | B,L | P | 100 µg/l | 100% removal; 108% desorption from resin by elutriation with solvent. | See XC-1 for additional results. | 20 |

(continued)

TABLE E-1 (continued)

Concentration Process: Resin Adsorption (X)
Chemical Classification: Aromatics (D)

| No.[a] | Chemical[b] | Description of Study: Study Type[c] | Waste Type[d] | Influent Char. | Results of Study | Comments | Ref. |
|---|---|---|---|---|---|---|---|
| XD-1 | Acetophenone | B,L | P | 100 µg/l | 100% reduction; 80% desorption from resin by elutriation with solvent. | Resin was Amberlite XAD-2. Resin found to be more effective than carbon for phthalate esters, most aromatics, and pesticides; carbon more efficient for alkanes; neither effective for acid compounds. | 20 |
| XD-2 | Benzaldehyde | B,L | P | 100 µg/l | 100% reduction; 79% desorption from resin by elutriation with solvent. | See XD-1 for additional results. | 20 |
| XD-3 | Benzil | B,L | P | 100 µg/l | 100% reduction; 63% desorption from resin by elutriation with solvent. | See XD-1 for additional results. | 20 |
| XD-4 | Benzoic Acid | B,L | P | 100 µg/l | 100% reduction; No desorption from resin by elutriation with solvent. | See XD-1 for additional results. | 20 |
| XD-5 | Benzene, Toluene, Xylene (BTX) | P | I | 20 to 300 ppm | Effluent (leakage) is 0.2ppm | Costs estimated to be $3.36/1000 gal. at 250 gpm and 300 ppm BTX. Resin regenerant is steam. Recovery of BTX reduces costs to $1.09/1000 gal. | 32 |
| XD-6 | Cumene | B,L | P | 100 µg/l | 100% removal; 63% desorption from resin by elutriation with solvent. | See XD-1 for additional results. | 20 |

(continued)

TABLE E-1(continued)

Concentration Process: Resin Adsorption (X)
Chemical Classification: Aromatics (D)

| No.[a] | Chemical[b] | Description of Study: Study Type[c] | Waste Type[d] | Influent Char. | Results of Study | Comments | Ref. |
|---|---|---|---|---|---|---|---|
| XD-7 | m-Dichloro-benzene | B,L | P | 100 μg/l | 100% removal; 52% desorption from resin by elutriation with solvent. | See XD-1 for additional results. | 20 |
| XD-8 | o-Dichloro-benzene | B,L | P | 100 μg/l | 100% removal; 61% desorption from resin by elutriation with solvent. | See XD-1 for additional results. | 20 |
| XD-9 | p-Dichloro-benzene | B,L | P | 100 μg/l | 100% removal; 35% desorption from resin by elutriation with solvent. | See XD-1 for additional results. | 20 |
| XD-10 | 1,2,4-Trichloro-benzene | B,L | P | 100 μg/l | 100% removal; 67% desorption from resin by elutriation with solvent. | See XD-1 for additional results. | 20 |
| XD-11 | 2,4,6-Trinitro-toluene (TNT) | P,C | I | 81 to 116 ppm | Resin adsorption capacity was 0.116 to 0.154 gm/gm at 1 ppm breakthrough. No loss in capacity after 15 regeneration cycles. 1 ppm breakthrough occurred after 633 to 1193 B.V. | Amberlite XAD-4 used; acetone regenerant. Less costly than carbon due to regenerability. | 2 |
| XD-12 | 2,4,6-Trinitro-toluene (TNT) and other munitions plant wastewaters: Cyclonite(RDX), Nitramine (Tetryl) and Tetrameth-[illegible] tetrani-[illegible]ne (HMX). | R | I | Not reported | Adsorption capacities (Lb/Lb Amberlite XAD-4 resin): Contaminant / Breakthrough / Saturation: TNT 0.020 / 0.050; RDX 0.236 / 0.382; RDX & TETRYL 0.003 / 0.019; 0.001 / 0.006; TNT & RDX 0.116 / 0.278; 0.020 / 0.030; TNT & HMX 0.002 / 0.179 | For 80 gpm facility costs estimated to be $5.08/1000 gal. | 40 |

(continued)

TABLE E-1(continued)

Concentration Process: Resin Adsorption (X)
Chemical Classification: Aromatics (D)

| No.[a] | Chemical[b] | Description of Study: Study Type[c] | Waste Type[d] | Influent Char. | Results of Study | Comments | Ref. |
|---|---|---|---|---|---|---|---|
| XD-12 cont. | | | | | (Note: breakthrough conc. not defined.)<br>Typical conc. of contaminants in wastewaters:<br>TNT - 0-400 ppm<br>RDX - 50-100 ppm<br>pH - 3.5-7.0<br>Flow - 0.02-1.0 MGD<br>Temp - 60-160°F | | |

(continued)

TABLE E-1(continued)

Concentration Process: Resin Adsorption (X)
Chemical Classification: Halocarbons (F)

| No.[a] | Chemical[b] | Description of Study: Study Type[c] | Waste Type[d] | Influent Char. | Results of Study | Comments | Ref. |
|---|---|---|---|---|---|---|---|
| XF-1 | Bromoform | L | W | 0.2 ppb | | See XF-16 for results. | 46 |
| XF-2 | Bromoform | B,L | P | 100 ppb | 100% removal; 28% desorption from resin by elutriation w/solvent. | Amberlite XAD-2 used Solvents included pentane-acetone, diethyl ether, methylene chloride-acetone, methyl chloride-acetone, and acetone. | 20 |
| XF-3 | Bromodichlomethane | L | W | | At 2 ppm, equilibrium capacity was 48 mg/g. | See XF-16 for results. | 46 |
| XF-4 | Carbon Tetrachloride | P | I | 100 to 7000 ppm chlorinated hydrocarbons | Effluent of <1ppm total chlorinated hydrocarbons could be achieved. | Steam used as regenerant. Costs estimated to be $1.18/1000 gal at 250 gpm & 300 ppm influent conc., $2.52/1000 gal at 60 gpm & 500 ppm, and $3.36/1000 gal at 60 gpm & 7500 ppm. | 32 |
| XF-5 | Chloroform | P | I | 100 to 7000 ppm chlorinated hydrocarbons | Effluent of <1ppm total chlorinated hydrocarbons could be achieved. | See XF-4 for comments. | 32 |
| XF-6 | Chloroform | L | W | 1.1 ppb | At 2ppm, equilibrium capacity was 50 mg/g. | See XF-16 for results. | 46 |

(continued)

TABLE E-1 (continued)

Concentration Process: Resin Adsorption (X)
Chemical Classification: Halocarbons (F)

| No.[a] | Chemical[b] | Description of Study: Study Type[c] | Waste Type[d] | Influent Char. | Results of Study | Comments | Ref. |
|---|---|---|---|---|---|---|---|
| XF-7 | Dibromochloromethane | L | W | 3.9 ppb | | See XF-16 for results. | 46 |
| XF-8 | 1,1-Dichloroethane | L | W | 2.3 ppb | | See XF-16 for results. | 46 |
| XF-9 | 1,2-Dichloroethane | L | W | 2.1 ppb | | See XF-16 for results. | 46 |
| XF-10 | 1,2-Dichloroethylene | L | W | 0.2 ppb | | See XF-16 for results. | 46 |
| XF-11 | Ethylene Dichloride | P | I | 100 to 7000 ppm chlorinated hydrocarbons | Effluent of <1ppm total chlorinated hydrocarbons could be achieved. | See XF-4 for comments. | 32 |
| XF-12 | Hexachlorobutadiene | B,L | P | 100 ppb | 100% removal; 73% desorption from resin by elutriation with solvent | See XF-2 for comments. | 20 |
| XF-13 | Hexachloroethane | B,L | P | 100 ppb | 100% removal; 55% desorption from resin by elutriation with solvent | See XF-2 for comments. | 20 |
| XF-14 | Tetrachloroethane | B,L | P | 100 ppb | 100% removal; 53% desorption from resin by elutriation with solvent | See XF-2 for comments. | 20 |
| XF-15 | Tetrachloroethylene | L | W | 179 ppb | | See XF-16 for results. | 46 |
| XF-16 | 1,1,1-Trichloroethane | L | W | 551 ppb | Performance for treatment of water containing several halogens | Column studies: 14 mm dia glass tubes, height 4" (15 cu cm adsorbent) | 46 |

(continued)

TABLE E-1 (continued)

Concentration Process: Resin Adsorption (X)
Chemical Classification: Halocarbons (F)

| No.[a] | Chemical[b] | Description of Study: Study Type[c] | Waste Type[d] | Influent Char. | Results of Study | Comments | Ref. |
|---|---|---|---|---|---|---|---|
| XF-16 cont | | | | | Virgin / Regenerated<br>BV to 33 ppb compound leakage: 9000 / 8500<br>Days: 23.4 / 22.1<br>Gal treated/cu ft sorbent: 67500 / 63750 | Flow-2 gpm/cu ft (16 BV/hr) Regenerated at 37 lb steam/cu ft @ 5 psig | |
| XF-17 | 1,2,3-Trichloropropane | B,L | P | 100 ppb | Complete removal w/complete desorption by elutriation w/solvent. | See XF-2 for comments. | 20 |

(continued)

TABLE E-1(continued)

Concentration Process: Resin Adsorption (X)
Chemical Classification: Polychlorinated Biphenyls (I)

| No.[a] | Chemical[b] | Description of Study | | | Results of Study | Comments | Ref. |
|---|---|---|---|---|---|---|---|
| | | Study Type[c] | Waste Type[d] | Influent Char. | | | |
| XI-1 | Arochlor 1254 | B,L | P | 100 ppb | 100% reduction; 76.6% desorbed from carbon by elutriation w/solvent. | Amberlite XAD-2 used. Solvents included pentane-acetone, diethyl ether, methylene chloride-acetone, chloroform-acetone & acetone. | 20 |
| XI-2 | Arochlor 1254 | C,L | P | 0-25 ppb 100ml/hr | Final effluent conc. was 0-0.25 ppb for 192 B.V. | 5 day study. | 22 |
| XI-3 | Arochlor 1254 & 1260 | C | M | 1-25 ppb | 60% reduction w/Amberlite XAD-4. 23% ± 2% reduction w/Amberlite XAD-2. | In continuous flow system reduction decreased greatly w/time. | 57 |

(continued)

TABLE E-1 (continued)

Concentration Process: Resin Adsorption (X)
Chemical Classification: Pesticides (J)

| No.[a] | Chemical[b] | Description of Study: Study Type[c] | Waste Type[d] | Influent Char. | Results of Study | Comments | Ref. |
|---|---|---|---|---|---|---|---|
| XJ-1 | Aldrin | B,L | P | 100 ppb | 100% reduction; 39% desorbed from resin by elutriation w/solvent. | Amberlite XAD-2 used. Solvents included pentane-acetone, diethyl ether, methylene chloride-acetone, chloroform-acetone and acetone | 20 |
| XJ-2 | Atrazine | B,L | P | 100 ppb | 100% reduction; 38% desorbed from resin by elutriation w/solvent. | See XJ-1 for comments. | 20 |
| XJ-3 | Chlorinated Pesticides (Unspecified) | L | I | 33 to 118 ppm | Column studies indicatd that Amberlite XAD-4 could process about four times more throughput before experiencing some leakage as carbon column. Leakages of <1 ppm maintained at longer than 120 BV. Resin could be effectively regenerated w/2 BV of isopropanol whereas even 8 BV did not effectively generate carbon. | Solvents ranking in terms of decreasing effectiveness were acetone, isopropanol, and methanol; however, acetone is very flammable. Column study conditions: 50-150 BV passed, 4 BV/hr flow, 12.5-125 hr duration. Costs estimated to be $0.83 for resin sorption and $1.33/1000 gal for carbon. | 49 |
| XJ-4 | 2,4-D Butyl ester | B,L | P | 100 ppb | 100% reduction; 10% desorbed from resin by elutriation w/solvent. | See XJ-1 for comments. | 20 |
| XJ-5 | 2,4-D and related herbicides | U | I | 20-1500 ppm @70-80 gpm | Effluent conc. reduced to <1.0 ppm. | Amberlite XAD-4 resin used. | 20 |

(continued)

TABLE E-1 (continued)

Concentration Process: Resin Adsorption (X)
Chemical Classification: Pesticides (J)

| No.[a] | Chemical[b] | Description of Study | | | Results of Study | Comments | Ref. |
|---|---|---|---|---|---|---|---|
| | | Study Type[c] | Waste Type[d] | Influent Char. | | | |
| XJ-6 | DDT | B,L | P | 100 ppb | 100% reduction; 49% desorbed from resin by elutriation w/solvent. | See XJ-1 for comments. | 20 |
| XJ-7 | Endrin and Heptachlor | F | I | 0.1-2.0 ppm @ 100 gpm | Effluent conc. reduced to <3.0 ppb. | Amberlite XAD-4 used. | 32 |
| XJ-8 | Toxaphene | U | I | 70-2600 ppb | Effluent conc. reduced to 0.1-4.2 ppb. | Amberlite XAD-4 used. | 32 |

(continued)

TABLE E-1 (continued)

Concentration Process: Resin Adsorption (X)
Chemical Classification: Phenols (K)

| No.[a] | Chemical[b] | Description of Study: Study Type[c] | Waste Type[d] | Influent Char. | Results of Study | Comments | Ref. |
|---|---|---|---|---|---|---|---|
| XK-1 | Bisphenol-A | C,L | I | 900 ppm 2 BV/hr | At pH 11.4, poor adsorption achieved on either XAD-4 or XAD-7. At pH 10.0, XAD-4 treated 33.5 B.V.'s to 50ppm breakthrough. XAD-7 treated 16 B.V. to 50 ppm breakthrough. | 95% regeneration achieved w/1 B.V. of 4% NaOH & 4 B.V. deionized water. | 23 |
| XK-2 | Bisphenol-A | C,L | I | 280 ppm 2 BV/ r | At pH 6.9, XAD-4 capacity was 34 g/l and XAD-7 capacity was 16 g/l. | See XK-1 for comments. | 23 |
| XK-3 | Brine Phenol | U | I | 20% brine w/10-150 ppm phenol | Effluent conc. reduced to <0.5 ppm. | Wastewater of brine purification process 5 B.V. of 4% NaOH required for regeneration | 33 |
| XK-4 | Brine Phenol | U | I | 10% brine w/10-400 ppm phenol | Effluent conc. reduced to <2.0 ppm phenols using cross linked polystyrene macroreticular resin. | Wastewater from a phenoxy acid pesticide manufacturer. | 33 |
| XK-5 | 4-Chloro-3-methylphenol | B,L | P | 100 ppb | 100% reduction; 70% desorbed from resin by elutriation w/solvent. | Amberlite XAD-2 used. Solvents included pentane-acetone, diethyl ether, methylene chloride-acetone, chloroform-acetone and acetone. | 20 |
| XK-6 | m-Chlorophenol w/23% NaCl | U | I | 350 ppm @ 0.5 gpm/ft$^3$ | At zero leakage sorption capacity was 0.07 lb/lb. | 15 min contact time Amberlite XAD-4 used. | 66 |

(continued)

TABLE E-1 (continued)

Concentration Process: Resin Adsorption (X)
Chemical Classification: Phenols (K)

| No.[a] | Chemical[b] | Description of Study: Study Type[c] | Waste Type[d] | Influent Char. | Results of Study | Comments | Ref. |
|---|---|---|---|---|---|---|---|
| XK-7 | 2,4-Dibromo-phenol | B,L | P | 100 ppb | 100% reduction; 44% desorbed from resin by elutriation w/solvent. | See XK-5 for comments. | 20 |
| XK-8 | Dichlorophenol | U | I | 1500 ppm w/15% brine, pH = 2-3 | Resin capacity was 5.6 lb phenols/$ft^3$ @ 5 ppm break-through. | Amberlite XAD-2 used. 2% caustic soda heated to $80^o$-$85^oC$ used as regenerant. | 33 |
| XK-9 | 2,3-Dichloro-phenol | B,L | P | 100 ppb | 100% reduction; 54% desorbed from resin by elutriation w/solvent. | See XK-5 for comments. | 20 |
| XK-10 | 2,4-Dichloro-phenol | U | I | 430 ppm @ 0.5 gpm/$ft^3$ | At zero leakage sorption capacity was 0.116 lb/lb. | 15 min contact time. Amberlite XAD-4 used. | 66 |
| XK-11 | β-Napthol | B,L | P | 100 ppb | 100% reduction; 76% desorbed by elutriation w/solvent. | See XK-5 for comments. | 20 |
| XK-12 | p-Nitrophenol | C,L | I | 700-1300 ppm @ $50^oC$ | Effluent conc. reduced to 5.0-6.0 ppm for 32 B.V. Resin capacity was about 40 g/l. Efficient ethanol regeneration. | Amberlite XAD-7 used. 20 ml columns used w/experimental runs of up to 40 B.V. | 23 |
| XK-13 | p-Nitrophenol | U | I | 1000-1800 ppm @ pH=2.0 | Effluent conc. reduced to 1-5 ppm by cross-linked polystyrene adsorbent resin. | Effluent from parathion manufacturer. 4% aqueous caustic soda (2B.V.) followed by water rinse used as regnerant. | 33 |
| XK-14 | Pentachloro-phenol | B,L | P | 100 ppb | 100% reduction; 60% desorbed from resin by elutriation w/solvent. | See XK-5 for comments. | 20 |

(continued)

TABLE E-1 (continued)

Concentration Process: Resin Adsorption (X)
Chemical Classification: Phenols (K)

| No.[a] | Chemical[b] | Description of Study: Study Type[c] | Waste Type[d] | Influent Char. | Results of Study | Comments | Ref. |
|---|---|---|---|---|---|---|---|
| XK-15 | Phenol | C,L | P | 6700 ppm | Effluent conc. of <1.0 ppm achieved. | Amberlite XAD-4 used. Acetone & methanol used as regenerants. | 23 |
| XK-16 | Phenol | U | I | 500-1500 ppm | Effluent conc. of 1.0-3.0ppm achieved. | Amberlite XAD-4 used. Wastewater from Bisphenol A manufacturer containing 0.5-1.5% phenol, 0.5-1.0% NaCl, 100-1000 ppm acetone @ pH=0.2-1.5. Acetone & methanol used as regenerant. | 33 |
| XK-17 | Phenol | U | I | 5000 ppm | Effluent conc. reduced to <25 ppm. | Wastewater from phenolic resin manufacturer. Warm 44% formaldehyde used as regenerant. | 33 |
| XK-18 | Resorcinol | B,L | P | 100 ppb | 100% reduction; 35% desorbed from resin by elutriation w/solvent. | See XK-5 for comments. | 20 |
| XK-19 | 2,4,6-Trichlorophenol | B,L | P | 100 ppb | 100% reduction; 60% desorbed from resin by elutriation w/solvent. | See XK-5 for comments. | 20 |
| XK-20 | 2,4,6-Trichlorophenol | U | I | 510 ppm @ 0.5 gpm/ft$^3$ | At zero leakage sorption capacity was 0.272 lb/lb. | 15 min contact time. Amberlite XAD-4 used. | 66 |

(continued)

TABLE E-1 (continued)

Concentration Process: Resin Adsorption (X)
Chemical Classification: Phthalates (L)

| No.[a] | Chemical[b] | Description of Study: Study Type[c] | Waste Type[d] | Influent Char. | Results of Study | Comments | Ref. |
|---|---|---|---|---|---|---|---|
| XL-1 | Dibutyl Phthalate | B,L | P | 100 ppb | 100% reduction; 108% desorbed from resin by elutriation w/solvent. | Amberlite XAD-2 used. Solvents included pentane-acetone, diethylether, methylene chloride-acetone, chloroform-acetone & acetone. | 20 |
| XL-2 | Diethylhexyl Phthalate | B,L | P | 100 ppb | 100% reduction; 76% desorbed from resin by elutriation w/solvent. | See XL-1 for comments. | 20 |
| XL-3 | Dimethyl Phthalate | B,L | P | 100 ppb | 100% reduction; 62% desorbed from resin by elutriation w/solvent. | See XL-1 for comments. | 20 |

(continued)

TABLE E-1 (continued)

Concentration Process: Resin Adsorption (X)
Chemical Classification: Polynuclear Aromatics (M)

| No.[a] | Chemical[b] | Description of Study: Study Type[c] | Waste Type[d] | Influent Char. | Results of Study | Comments | Ref. |
|---|---|---|---|---|---|---|---|
| XM-1 | Acenapththalene | B,L | P | 100 ppb | 100% reduction; 78% desorbed from resin by elutriation w/solvent. | Amberlite XAD-2 used. Solvents included pentane-acetone, diethyl ether, methylene chloride-acetone, chloroform-acetone & acetone. | 20 |
| XM-2 | Biphenyl | B,L | P | 100 ppb | 100% reduction; 73% desorbed from resin by elutriation w/solvent. | See XM-1 for comments. | 20 |
| XM-3 | Cumene | B,L | P | 100 ppb | 100% reduction; 63% desorbed from resin by elutriation w/solvent. | See XM-1 for comments. | 20 |
| XM-4 | Dimethylnaphthalene | B,L | P | 100 ppb | 100% reduction; 90% desorbed from resin by elutriation w/solvent. | See XM-1 for comments. | 20 |
| XM-5 | Fluoranthrene | B,L | P | 100 ppb | 100% reduction; 66% desorbed from resin by elutriation w/solvent. | See XM-1 for comments. | 20 |
| XM-6 | Phenanthrene | B,L | P | 100 ppb | 100% reduction; 41% desorbed from resin by elutriation w/solvent. | See XM-1 for comments. | 20 |
| XM 7 | Pyrene | B,L | P | 100 ppb | 100% reduction; 63% desorbed from resin by elutriation w/solvent. | See XM-1 for comments. | 20 |

(continued)

TABLE E-1(continued)

Concentration Process: Miscellaneous Sorbents (XII)
Chemical Classification: Metals (G)

| No.[a] | Chemical[b] | Description of Study: Study Type[c] | Waste Type[d] | Influent Char. | Results of Study | Comments | Ref. |
|---|---|---|---|---|---|---|---|
| XII G-1 | Arsenic | R | U | 25 ppm | Effluent conc. of 1.0ppm achieved. | Silicon alloy used. | 90 |
| XII G-2 | Cadmium | R | U | 25 ppm | Effluent conc. of 1.0ppm achieved. | Silicon alloy used. | 90 |
| XII G-3 | Chromium | R | U | 300 ppm | 100% removal. | High clay soil used | 90 |
| XII G-4 | Copper | R | U | 300 ppm | 100% removal. | High clay soil used | 90 |
| XII G-5 | Copper | R | U | 25 ppm | Effluent conc. of 1.0ppm achieved. | Silicon alloy used. | 90 |
| XII G-6 | Lead | R | U | | Residual of <5.0 mg/l achieved. | Ground redwood bark used. | 90 |
| XII G-7 | Lead | R | U | 25 ppm | Effluent conc. of 1.0ppm achieved. | Silicon alloy used. | 90 |
| XII G-8 | Mercury | R | U | 25 ppm | Final conc. of 10 ppb achieved. | Silicon alloy used. | 90 |
| XII G-9 | Zinc | R | U | 10 ppm | Final conc. reduced to 0.1 ppb. | $SiO_2$ & CaO slags used. | 90 |

(continued)

TABLE E-1(continued)

Concentration Process: Miscellaneous Sorbents (XII)
Chemical Classification: Polychlorinated Biphenyls (I)

| No.[a] | Chemical[b] | Description of Study | | | Results of Study | Comments | Ref. |
|---|---|---|---|---|---|---|---|
| | | Study Type[c] | Waste Type[d] | Influent Char. | | | |
| XII I-1 | Arochlor 1254 & 1260 | C | M | 1-25 ppb | 73% reduction in raw sewage w/PVC chips. Polyurethane foam adsorbed 35% ± 3%. | In continuous flow system reduction decreased greatly w/time. | 57 |

Footnotes:

a. Three part code number assigned to each individual chemical compound. First part is a Roman numeral which corresponds to the concentration process code number. Second part is a capital letter corresponding to the chemical classification code number. Third part is unique number for each individual compound.

b. Chemicals are presented in alphabetical order generally according to The Merck Index preferred or generic name. However, it is recommended to check for a compound under several potential names.

c. Describes the scale of the referenced study:

B - Batch Flow
C - Continuous Glow
F - Full Scale
I - Isotherm Test
L - Laboratory Scale
N - Flow Not Controlled
O - Respirometer Study
P - Pilot Scale
R - Literature Review
S - Slug Dose Chemical Addition
U - Unknown

(continued)

Footnotes (continued):

d. Describes the type of wastewater used in the referenced study:

D - Domestic wastewater
H - Hazardous material spill
I - Industrial wastewater
P - Pure Compound (one solute in a solvent)
R - River water
S - Synthetic wastewater
U - Unknown
W - Well water

## REFERENCES TO TABLE E-1


1. Anderson, G.L., Bair, W.G., and J.A. Hudziak. Ultrafiltration for Coal Gasification Plants. Chemical Engineering Progress, 74(8):66-72, 1978.

2. Anderson, R.K., Nystron, J.M., McDonnell, R.P., and B.W. Stevens. Explosives Removal from Munitions Wastewater. In: Proceedings of the 30th Industrial Waste Conference, Purdue University, Lafayette, Indiana, 1975. pp. 816-825.

3. Bansal, B.,and W.N. Gill. Theoretical Experimental Study of Radial Flow Hollow Fiber Reverse Osmosis. Water - 1974 70(144):136-149, 1974.

4. Bansal, I.K. Ultrafiltration of Oily Wastes from Process Industries. Water - 1975, 71(151):93-99, 1975.

5. Beaudet, B.A. Study of Effectiveness of Activated Carbon Technology for the Removal of Specific Materials from Organic Chemical Processes. US EPA Contract No. 68-03-2610. Environmental Science and Engineering Inc., Gainesville, Florida, May 1979.

6. Becker, D.L.,and S.C. Wilson. The Use of Activated Carbon for the Treatment of Pesticides and Pesticidal Wastes. In: Carbon Adsorption Handbook, P.N. Cheremisinoff and F. Ellerbusch, eds. Ann Arbor Science, Ann Arbor, Michigan 1978. pp. 167-213.

7. Berkau, E.E., Frank, C.E., and I.A. Jefcoat. A Scientific Approach to the Identification and Control of Toxic Chemicals in Industrial Wastewater. US EPA, IERL, Cincinnati, Ohio. Presented at AIChE 87th National Meeting, Boston, Massachusetts, August, 1979.

8. Bernardin, F.E. Jr., and E.M. Froelich. Practical Removal of Toxicity by Adsorption. In: Proceeding 30th Industrial Waste Conference, Purdue University, Lafayette, Indiana, 1975. pp. 548-560.

9. Berndt, C.L.,and Polkowski, L.B., PAC Upgrades Wastewater Treatment. Water & Wastes Engineering, 15(5):48, 1978.

10. Bhattacharyya, D., Garrison, K.A., and R.B. Grieves. [illegible] brane Ultrafiltration of Nitrotoluenes from Industr[illegible] Wastes. In: Proceedings 31st Industrial Waste Con[illegible] Purdue University, Lafayette, Indiana, 1976. pp. [illegible]

11. Bhattacharyya, D., Garrison, K.A., The, P.J.W., and R.B. Grieves. Membrane Filtration: Waste Treatment Application for Water Reuse. In: Proceedings of the 30th Industrial Waste Conference, Purdue University, Lafayette, Indiana, 1975. pp. 120-131.

12. Bhattacharyya, D., Jumawan, A.B., Grieves, R.B., and S.O. Witherup. Ultrafiltration of Complex Wastewaters: Recycling for Nonpotable Use. Journal Water Pollution Control Federation, 50(5):846-861, 1978.

13. Bruderly, D.E., Crane, J.D., and J.D. Riggenbach. Feasibility of Zero Aromatic Hydrocarbon Discharge from a Styrene Monomer Facility. In: Proceedings 32nd Industrial Waste Conference, Purdue University, Lafayette, Indiana, 1977. pp. 726-732.

14. Carberry, J.B., Twardowski, W.,and D.K. Eberhart. Clay Adsorption Treatment of Non-Ionic Surfactants in Wastewater. Journal Water Pollution Control Federation, 49(3):452-459, 1977.

15. Carnahan, R.P.,and L. Smith. Treatment of Wastewater Containing Nitroglycerin and Nitrated Esters. In: Proceedings 32nd Industrial Waste Conference, Purdue University, Lafayette, Indiana, 1977. pp. 876-887.

16. Chian, E.S.K. Renovation of Vehicle Washrack Wastewater for Reuse. Water - 1975, 71(151):87-92, 1975.

17. Chian, E.S.K., Bruce, W.N., and H.H.P. Fang. Removal of Pesticides by Reverse Osmosis. Environmental Science and Technology, 9(1):52-59, 1975.

18. Chian, E.S.K., H.H.P. Fang. Removal of Toxic Compounds by Reverse Osmosis. Unpublished report available from Abcor, Inc., Wilmington, Massachusetts.

19. Chian, E.S.K., Fang, H.H.P., DeWalle, F.B., and J.W. Smith. Physical-Chemical Treatment of Hospital Wastewaters for Potential Reuse. In: Proceedings of the 30th Industrial Waste Conference, Purdue University, Lafayette, Indiana, 1975. pp. 377-389.

20. Chriswell, C.D., Ericson, R.L., Junk, G.A., Lee, K.W., Fritz, J.S., and H.J. Svec. Comparison of Macroretic[illegible] Resin and Activated Carbon as Sorbents. Journal Amer[illegible] Water Works Association, 69(12):669-674, 1977.

21. Cohen, J.M. Briefing for Dr. Gage on Treatability/Removability of Toxics from Wastewater. US EPA, Cincinnati, Ohio, June 1979.

22. Contos, G., Durfee, R.L., Hackman, E.E., and K. Price. Assessment of Wastewater Management, Treatment Technology, and Associated Costs for Abatement of PCB's Concentrations in Industrial Effluents. EPA 560/6-76-006, U.S. Environmental Protection Agency, Washington, DC 1976. 227 pp.

23. Crook, E.H., McDonnell, R.P., and J.T. McNulty. Removal and Recovery of Phenols from Industrial Waste Effluents with Amberlite XAD Polymeric Adsorbents. I & EC Product Research and Development. 14:113, 1975.

24. Davis, H.J., Model, F.S., and J.R. Leal. PBI Reverse Osmosis Membrane for Chromium Plating Rinse Water. EPA-600/2-78-040, U.S. Environmental Protection Agency, Cincinnati, Ohio, 1978. 28 pp.

25. Dence, C.W., Wang, C.J., and P.R. Durkin. Toxicity Reduction Through Chemical and Biological Modification of Spent Pulp Bleaching Liquors. EPA Project R 804779, Preliminary Draft Report, U.S. Environmental Protection Agency, Cincinnati, Ohio.

26. Directo, L.S., Chen, C.L., and I.J. Kugelman. Pilot Plant Study of Physical-Chemical Treatment. Journal Water Pollution Control Federation, 49(10):2081-2106, 1977.

27. Earhart, J.P., Won, K.W., Wong, H.Y., Prausnitz, J.M., and C.J. King. Recovery of Organic Pollutants via Solvent Extraction. Chemical Engineering Progress, 73(5):67-73, 1977.

28. Eisenberg, W.C., Fochtman, E., and R.A. Dobbs. Treatment of Carcinogenic and Other Hazardous Compounds in Water. In: Preprints of Papers Presented at the 177th National Meeting of the American Chemical Society, Honolulu, Hawaii, 1976. pp. 794-795.

29. DeJohn, P.B., Factors to Consider When Treating Dye Wastes with Granular Activated Carbon. In: Proceedings 31st Industrial Waste Conference, Purdue University, Lafayette, Indiana, 1976. pp. 375-384.

30. Fang, H.H.P., and E.S.K. Chian, Reverse Osmosis Separation of Polar Organic Compounds in Aqueous Solution. Environmental Science and Technology, 10(4):364-369. 1976.

31. Fochtman, E.G.,and R.A. Dobbs. Adsorption of Carcinogenic Compounds by Activated Carbon. US EPA, MERL, Cincinnati, Ohio.

32. Fox, C.R. Toxic Organic Removal from Waste Waters with Polymeric Adsorbent Resins. Presentation at 86th National American Institute of Chemical Engineers Meeting, Houston, Texas, 1979.

33. Fox, C.R. Plant Uses Prove Phenol Recovery with Resins. Hydrocarbon Processing, pp. 269-273, November, 1978.

34. Gehr, R.,and J.G. Henry. Measuring and Predicting Flotation Performance. Journal Water Pollution Control Federation, 50(2):203-215, 1978.

35. Giusti, D.M., Conway, R.A., and C.T. Lawson. Activated Carbon Adsorption of Petrochemicals. Journal Water Pollution Control Federation, 46(5):947-965, 1974.

36. Givens, D.P.,and L.D. Lash. What to Look for in Granular Media Filters. Chemical Engineering Progress, 74(12):50-54, 1978.

37. Gurvitch, M.M. Description of an Advanced Treatment Plant to Produce Recycle Water at a Chemical R & D Facility. 34th Industrial Waste Conference, Purdue University, Lafayette, Indiana, 1979.

38. Hager, D.G. Waste Water Treatment Via Activated Carbon. Chemical Engineering Progress, 72(10):57-60, 1976.

39. Hannah, S.A., Jelus, M., and J.M. Cohen. Removal of Uncommon Trace Metals by Physical and Chemical Treatment Processes. Journal Water Pollution Control Federation, 49(11):2297-2309, 1977.

40. Heck, R.P. II. Munitions Plant Uses Adsorption in Wastewater Treatment. Industrial Wastes, pp. 35-39, March/April 1978.

41. Helsel, R.W. A New Process for Recovering Acetic Acid from Dilute Aqueous Waste Streams. In: Proceedings of the 31st Industrial Waste Conference, Purdue University, Lafayette, Indiana, 1976. pp. 1059-1067.

42. Hewes, C.G., Smith, W.H., and R.R. Davison. Comparative Anaylsis of Solvent Extraction and Stripping in Wastewater Treatment. Water - 1974, 70(144):54-60, 1974.

43. Huang, J.C., and J.T. Garrett Jr. Effects of Colloidal Materials and Polyelectrolytes on Carbon Adsorption in Aqueous Solution. In: Proceedings of the 30th Industrial Waste Conference, Purdue University, Lafayette, Indiana, 1975. pp. 1111-1121.

44. Huang, J.C., and C.T. Steffans. Competitive Adsorption of Organic Materials by Activated Carbon. In: Proceedings 31st Industrial Waste Conference, Purdue University, Lafayette, Indiana, 1976. pp. 107-121.

45. Huang, C.P., and M.H. Wu. Chromium Removal by Carbon Adsorption. Journal Water Pollution Control Federation, 47(10):2437-2446, 1975.

46. Isacoff, E.G., and J.A. Bittner. Resin Adsorbent Takes on Chlororganics from Well Water. Water and Sewage Works, 126(8):41-42, 1979.

47. Jones, M.L. Jr. Techniques for Qualitative Economic Comparison of Reverse Osmosis Membranes. Water - 1975, 71(151):145-152, 1975.

48. Jordan, Edward C. Co. Inc. Literature Review, Removal of Phenolic Compounds from Wastewater. EPA Project No. 68-03-2605, U.S. Environmental Protection Agency, Cincinnati, Ohio, 1979.

49. Kennedy, D.C. Treatment of Effluent from Manufacture of Chlorinated Pesticides with a Synthetic, Polymeric Adsorbent, Amberlite XAD-4. Environmental Science and Technology, 7(2):138-141, 1973.

50. Kennedy, D.C., Kimler, M.A., and C.A. Hammer. Functional Design of a Zero Discharge Wastewater Treatment System for the National Center for Toxicological Research. In: Proceedings of the 31st Industrial Waste Conference, Purdue University, Lafayette, Indiana, 1976. pp. 823-830.

51. Kessick, M.A., Characklis, W.G., and W. Elvey. Treatment of Wastewater from Torpedo Refueling Facilities. In: Proceedings 32nd Industrial Waste Conference, Purdue University, Lafayette, Indiana, 1977. pp. 442-449.

52. Kim, B.R., Snoeyink, V.L., and F.M. Saunders. Adsorption of Organic Compounds by Synthetic Resins. Journal Water Pollution Control Federation, 48(1):120-133, 1976.

53. Kim, B.R., Snoeyink, V.L., and R.A. Schmitz. Removal of Dichloramine and Ammonia by Granular Carbon. Journal Water Pollution Control Federation, 50(1):122-133, 1978.

54. Klemetson, S.L.,and M.D. Scharbow. Removal of Phenolic Compounds in Coal Gasification Wastewaters Using a Dynamic Membrane Filtration Process. In: Proceedings 32nd Industrial Waste Conference, Purdue University, Lafayette, Indiana, 1977. pp. 786-796.

55. Klinkowski, P.R. Ultrafiltration: An Emerging Unit-Operation. Chemical Engineering, 85(11):165-173, 1978.

56. Kimke, G.W., Hall, J.F., and R.W. Oeben. Conversion to Activated Sludge at Union Carbide's Institute Plant. Journal Water Pollution Control Federation, 40(8):1408-1422 1968.

57. Lawrence, J.,and H.M. Tosine. Adsorption of Polychlorinated Biphenyls from Aqueous Solutions and Sewage. Environmental Science and Technology, 10(4):381-383, 1976.

58. Leipzig, N.A.,and M.R. Hockenbury. Powdered Activated Carbon/Activated Sludge Treatment of Chemical Production Wastewaters. In: Proceedings 34th Industrial Waste Conference, Purdue University, Lafayette, Indiana, 1979.

59. Lopez, C.X.,and R. Johnston. Industrial Wastewater Recycling with Ultrafiltration and Reverse Osmosis. In: Proceedings 32nd Industrial Waste Conference, Purdue University, Lafayette, Indiana, 1977. pp. 81-91.

60. Luther, P.A., Kennedy, D.C., E. Edgerley Jr. Treatability and Functional Design of a Physical-Chemical Wastewater Treatment System for a Printing and Photodeveloping Plant. In: Proceedings 31st Industrial Waste Conference, Purdue University, Lafayette, Indiana, 1976. pp. 816-884.

61. Luthy, R.G., Selleck, R.E., and T.R. Galloway. Removal of Emulsified Oil with Organic Coagulants and Dissolved Air Flotation. Journal Water Pollution Control Federation, 50(2):331-346, 1978.

62. Markind, J., Neri, J.S., and R.R. Stana. Use of Reverse Osmosis for Concentrating Waste-Soluble Oil Coolants. Water - 1975, 71(151):70-75, 1975.

63. Maruyama, T., Hannah, S.A., and J. M. Cohen. Metal Removal by Physical and Chemical Treatment Processes. Journal Water Pollution Control Federation, 47(5):962-975, 1975.

64. McCarty, P.L., Reinhard, M., Dolce, C., Nguyen, H.,and D.G. Argo. Water Factory 21: Reclaimed Water, Volatile Organics, Virus, and Treatment Performance. EPA-600/2-78-076, U.S. Environmental Protection Agency, Cincinnati, Ohio, 1978. 100 pp.

65. Municipal Environmental Research Laboratory, US EPA. Survey of Two Municipal Wastewater Treatment Plants for Toxic Substances. Cincinnati, Ohio. March 1977.

66. Nathan, M.F. Choosing a Process for Chloride Removal. Chemical Engineering, 85(3):93, 1978.

67. Naylor, L.M.,and R.R. Dague. Simulation of Lead Removal by Chemical Treatment. Journal American Water Works Association, 67(10):560-565, 1975.

68. Neufeld, R.D.,and P. Yodnane. Enhanced Wastewater Purification via the Addition of Granular Coals and Chars to Activated Sludge. Journal Water Pollution Control Federation, 50(3):559-568, 1978.

69 Ng, K.S., Mueller, J.C., and C.C. Walden. Foam Separation for Detoxification of Bleached Kraft Mill Effluents. Journal Water Pollution Control Federation, 48(3):458-472, 1976.

70. Ott, C., Gingras, R., and R. Litman. Removal of Chromium from Wastewater Using Activated Carbon. In: Preprints of Papers Presented at the 177th National Meeting of the American Chemical Society, Honolulu, Hawaii, 1979. pp. 708-709.

71. Pajak, A.P., Martin, E.J., Brinsko,G.A., and F.J. Erny. Effect of Hazardous Material Spills on Biological Treatment Processes, EPA-600/2-77-239, U.S. Environmental Protection Agency, Cincinnati, Ohio, 1977. 202 pp.

72. Pilie, R.J., Baier, R.E., Ziegler, R.C., Leonard, R.P., Michalovic, J.G., Pek, S.L., and D.H. Bock. Methods to Treat, Control,and Monitor Spilled Hazardous Materials. EPA-670/2-75-042. U.S. Environmental Protection Agency, Cincinnati, Ohio, 1975. 138 pp.

73. Ramirez, E.R. Comparative Physio-Chemical Study of Industrial Waste Water Treatment by Electrolytic Dispersed [illegible] and Dissolved Air Flotation Technologies. In: Proceedings 34th Industrial Waste Conference, Purdue University. Lafayette, Indiana, 1979.

74. Ramirez, E.R., Barber, L.K., and O.A. Clemens. Physiochemical Treatment of Tannery Wastewater by Electrocoagulation. In: Proceedings 32nd Industrial Waste Conference, Purdue University, Lafayette, Indiana, 1977. pp.183-188.

75. Reismers, R.S., Englande, A.J., and H.B. Miles. A Quick Method for Evaluating the Suitability of Activated Carbon Adsorption for Wastewaters. In: Proceedings 31st Industrial Waste Conference, Purdue University, Lafayette, Indiana, 1976. pp. 395-407.

76. Sandhu, S.S.,and P. Nelson. Concentration and Separation of Arsenic from Polluted Aqueous Samples by Ion Exchange. In: Preprints of Papers Presented at the 177th National Meeting of the American Chemical Society, Honolulu, Hawaii 1979.

77. Schulte, G.R., Hoehn, R.C., and C.W. Randall. The Treatability of a Munitions-Manufacturing Waste with Activated Carbon. In: Proceedings 28th Industrial Waste Conference, Purdue University, Lafayette, Indiana, 1973. pp. 150-162.

78. Sigworth, E.A.,and S.B. Smith. Adsorption of Inorganic Compounds by Activated Carbon. Journal American Water Works Association, 64(6):386-391, 1972.

79. Slejko, F.L.,and G.F. Meigs. Economic Analysis of Employing Ambersorb XE-340 Carbonaceous Adsorbent in Trace Organics Removal from Drinking Water. In: Proceedings 176th National Meeting American Chemical Society, Miami Beach, Florida, 1978.

80. Snyder, D.D., and R.A. Willihnganz. A New Electrochemical Process for Treating Spent Emulsions. In: Proceedings 31st Industrial Waste Conference, Purdue University, Lafayette, Indiana, 1976. pp. 782-791.

81. SCS Engineers. Selected Biodegradation Techniques for Treatment and/or Ultimate Disposal of Organic Material. EPA-600/2-79-006, U.S. Environmental Protection Agency, Cincinnati, Ohio, 1979. 377 pp.

82. Sorg, T.J., Csanady, Mihaly, and G.S. Logsdon. Treatment Technology to Meet the Interim Primary Drinking Water Regulations for Inorganics. Part 3. Journal American Water Works Association, 70:12, 680, 1978.

83. Sorg, T.J., and G.S. Logsdon. Treatment Technology to Meet the Interim Primary Drinking Water Regulations for Inorganics. Part 2. Journal American Water Works

Association, 70(7):379, 1978.

84. Steiner, J.L., Bennett, G.F., Mohler, E.F., and L.T. Clere. Air Flotation Treatment of Refinery Waste Water. Chemical Engineering Progress, 74(12):39-45, 1978.

85. Suler, D. Composting Hazardous Industrial Wastes. Compost Science/Land Utilization, 20(4):25-27, 1979.

86. Swedes, R.G. Jr. Report on Carbon Adsorption Treatment of Contaminated Groundwater at Rocky Mountain Arsenal, Department of Army, 1977-781-590/139, 1977.

87. Thiem, L., Badorek, D., and J.T. O'Connor. Removal of Mercury from Drinking Water Using Activated Carbon. Journal American Water Works Association, 68(8):447-451, 1976.

88. Volesky, B., Czornyj, N., Constantine, T.A., Zajic, J.E., and K. Ya. Model Treatability Study of Refinery Phenolic Wastewater. Water - 1974, 70(144):31-38, 1974.

89. Wahl, J.R., Hayes, T.C., Kleper, M.H., and S.D. Pinto. Ultrafiltration for Today's Oily Wastewaters: A Survey of Current Ultrafiltration Systems. In: Proceedings 34th Industrial Waste Conference, Purdue University, Lafayette, Indiana, 1979.

90. Dryden, F.E., Mayes, J.H., Planchet, R.J., and C.H. Woodard Priority Pollutant Treatability Review. EPA Contract No. 68-03-2579, U.S. Environmental Protection Agency, Cincinnati, Ohio, 1978.

91. Westrick, J.J., and J.M. Cohen. Comparative Effects of Chemical Pretreatment on Carbon Adsorption. Journal Water Pollution Control Federation, 48(2):323-338, 1976.

92. Wilkinson, R.R., Kelso, G.L., and F.C. Hopkins. State-of-the-Art Report, Pesticide Disposal Research. EPA-600/2-78-183, U.S. Environmental Protection Agency, Cincinnati, Ohio, 1978. 247 pp.

93. Zahka, J., and L. Mir. Ultrafiltration of Latex Emulsions. Chemical Engineering Progress, 72(12):53-55, 1977.

94. Zogorski, J.S., and S.D. Faust. Removing Phenols via Activated Carbon. Chemical Engineering Progress, 73(5):65-66, 1977.

95. Coco, J.H., et al. Development of Treatment and Control Technology for Refractory Petrochemical Wastes. EPA-600/2-79-080, U.S. Environmental Protection Agency, Ada, Oklahoma, 1979. 236 pp.

96. Chan, P.C., Dresnack, R., Liskowitz, J.W., Perna, A., and R. Trattner. Sorbents for Fluoride, Metal Finishing, and Petroleum Sludge Leachate Contaminant Control. EPA-600/2-78-024, U.S. Environmental Protection Agency, Cincinnati, Ohio, 1978. 94 pp.

97. Chian, E.S.K. , and F.B. DeWalle. Evaluation of Leachate Treatment, Volume II: Biological and Physical Chemical Process. EPA-600/2-77-186b, U.S. Environmental Protection Agency, Cincinnati, Ohio, 1977. 265 pp.

98. Chian, E.S.K., and F.B. DeWalle. Evaluation of Leachate Treatment, Volume 1: Characterization of Leachate. EPA-600/2-77-186a, U.S. Environmental Protection Agency, Cincinnati, Ohio, 1977. 226 pp.

99. Lund, H.F. Industrial Pollution Control Handbook, McGraw-Hill Book Co., New York, New York, 1971.

100. Bess, F.D., and R.A. Conway. Aerated Stabilization of Synthetic Organic Chemical Wastes. Journal Water Pollution Control Federation, 38(6):939-956, 1966.

101. Kumke, G.W., et al. Conversion to Activated Sludge at Union Carbide's Institute Plant. Journal Water Pollution Control Federation, 40(8):1408-1422, 1968.

102. Manufacturing Chemists Association. The Effects of Chlorination on Selected Organic Chemicals. U.S. Environmental Protection Agency, Water Pollution Control Research Series, EPA Report No. 12020 EXG-03/72, March 1972.

103. Placak, O.R., and C.C. Ruchhoft. Studies of Sewage Purification, XVII: The Utilization of Organic Substrates by Activated Sludge. Sewage Works Journal, 19(3):440, 1947.

104. Dickerson, B.W., et al. Further Operating Experiences in Biological Purification of Formaldehyde Wastes. In: Proceedings 9th Industrial Waste Conference, Purdue University, Lafayette, Indiana, 1954. pp. 331-351.

105. Bogan, R.H., and C.N. Sawyer. The Biochemical Oxidation of Synthetic Detergents. In: Proceedings 10th Industrial Waste Conference, Purdue University, Lafayette, Indiana, 1955. pp. 231-243.

106. Lutin, P.A. Removal of Organic Nitrites from Wastewater Systems. Journal Water Pollution Control Federation, 42(9):1632-1642, 1970.

107. Malaney, G.W., and R.M. Gerhold. Structural Determinants in the Oxidation of Aliphatic Compounds by Activated Sludge. Journal Water Pollution Control Federation, 41(2):R18-R33, 1969.

108. Malaney, G.W. Resistance of Carcinogenic Organic Compounds to Oxidation by Activated Sludge. Journal Water Pollution Control Federation, 39(12):2029, 1967.

109. Dawson, P.S., and S.H. Jenkins. The Oxygen Requirements of Activated Sludge Determined by Monometric Methods. II: Chemical Factors Affecting Oxygen Uptake. Sewage and Industrial Wastes, 22(4):490, 1950.

110. Sawyer, C.N., Frame, J.D., and J.P. Wold. Industrial Wastes, Revised Concepts on Biological Treatment. Sewage and Industrial Wastes, 27(8):929, 1955.

111. Swisher, R.D., et al. Biodegradation of Nitrilotriacetate in Activated Sludge. Environmental Science and Technology, 1(10):820-827, 1967.

112. Hunter, J.V., and H. Heukelekian. Determination of Biodegradability Using Warburg Respirometric Techniques. In: Proceedings 19th Industrial Waste Conference, Purdue University, Lafayette, Indiana, 1964. pp. 616-627.

113. Marion, C.V., and G.W. Malaney. Ability of Activated Sludge to Oxidize Aromatic Organic Compounds. In: Proceedings 18th Industrial Waste Conference, Purdue University, Lafayette, Indiana, 1963. pp. 297-308.

114. Hydroscience, Inc. The Impacts of Oily Materials on Activated Sludge Systems. U.S. Environmental Protection Agency, Water Pollution Control Research Series, EPA Report No. 12050 DSH 03/71, March 1971.

115. The City of Jacksonville, Arkansas. The Demonstration of a Facility for the Biological Treatment of a Complex Chlorophenolic Waste. U.S. Environmental Protection Agency, Water Pollution Control Research Series, EPA Report No. 12130 EGK 06/71, June 1971.

116. Hay, M.W., et al. Factors Affecting Color Development During Treatment of TNT Wastes. Industrial Wastes, 18(5), September/October 1972.

117. Teng-Chung, W. Factors Affecting Growth and Respiration in the Activated Sludge Process. Ph.D. Dissertation, Case Institute of Technology, Cleveland, Ohio, 1963.

118. Masselli, J.W., et al. The Effect of Industrial Waste On Sewage Treatment. Prepared for the New England Interstate Water Pollution Control Commission by Wesleyan University, Middletown, Connecticut, No. TR-13, June 1965.

119. Ling, J.T. Pilot Study of Treating Chemical Wastes with an Aerated Lagoon. Journal Water Pollution Control Federation, 35(8):963-972, 1963.

120. Heidman, J.A., et al. Metabolic Response of Activated Sludge to Sodium Pentachlorophenol. In: Proceedings 22nd Industrial Waste Conference, Purdue University, Lafayette, Indiana, 1967. pp. 661-674.

121. Okey, R.W., and R.W. Bogan. Synthetic Organic Pesticides, An Evaluation of Their Persistence in Natural Waters. In: Proceedings 11th Pacific Northwest Industrial Waste Conference, Oregon State University, Corvallis, Oregon, 1963. pp. 222-251.

122. Barth, E.F., et al. Field Survey of Four Municipal Wastewater Treatment Plants Receiving Metallic Wastes. Journal Water Pollution Control Federation, 37(8):1101-1117, 1965.

123. Bailey, D.A., and K.S. Robinson. The Influence of Trivalent Chromium on the Biological Treatment of Domestic Sewage. Water Pollution Control (G.B.), 69:100ff, 1970.

124. Loveless, J.E, and N.A. Painter. The Influence of Metal Ion Concentration and pH Value on the Growth of a Nitrosomonas Strain Isolated from Activated Sludge. Journal General Microbiology, 52(3):1ff, 1968.

125. Barth, E.F., et al. Summary Report on the Effects of Heavy Metals on the Biological Treatment Processes. Journal Water Pollution Control Federation, 37(1):86, 1965

126. Leary, R.D. Phosphorus Removal with Pickle Liquor in an Activated Sludge Plant. U.S. Environmental Protection Agency, Water Pollution Control Research Series, EPA Report No. 11010 FLQ 3/71, March 1971.

127. Lamb, J.C.,III, et al. A Technique for Evaluating the Biological Treatability of Industrial Wastes. Journal Water Pollution Control Federation, 36(10):1263-1284, 1964.

128. Robert A. Taft Sanitary Engineering Center, Chemistry and Physics Center. Interaction of Heavy Metals and Biological Sewage Treatment Processes. U.S. Public Health Service, Cincinnati, Ohio. May 1965.

129. Stones, T. The Fate of Nickel During the Treatment of Sewage. J. & Proc. Inst. Sew. Purif. (Brit.), Part 2, pp. 252ff, 1959.

130. McDermott, G.N. Zinc in Relation to Activated Sludge and Anaerobic Digestion Processes. In: Proceedings 17th Industrial Waste Conference, Purdue University, Lafayette Indiana, 1963. pp. 461-475.

131. Stones, T. The Fate of Zinc During the Treatment of Sewage. J. & Proc. Inst. Sew. Purif. (Brit.), Part 2, pp. 254ff, 1959.

132. Ghosh, M.M., and P.D. Zugger. Toxic Effects of Mercury on the Activated Sludge Process. Journal Water Pollution Control Federation, 45(3):424-433, 1973.

133. Pitter, P. Determination of Biological Degradability of Organic Substrates. Water Res., 10:231-235, 1976.

134. Arthur D. Little, Inc. Physical, Chemical, and Biological Treatment Techniques for Industrial Wastes. U.S. Environmental Protection Agency Contract/Grant No. 68-01-3554, U.S. Environmental Protection Agency, Washington, DC, 1976.

135. Rohm and Haas Company. Ambersorb Carbonaceous Adsorbents. Philadelphia, Pennsylvania, 1977. 20 pp.

136. New Jersey Hazardous Waste Advisory Commission. Report of the Hazardous Waste Advisory Commission to Governor Brendan Byrne. Trenton, New Jersey, January, 1980.

137. Geraghty and Miller, Inc. The Prevalence of Subsurface Migration of Hazardous Chemical Substances at Selected Industrial Waste Land Disposal Sites. EPA/530/SW-634, U.S. Environmental Protection Agency, 1977.