FINAL REPORT

ANALYSIS OF WASTEWATER DISCHARGE FROM MARINE SANITATION DEVICES

Submitted to:

Environmental Protection Agency
Office of Analysis and Evaluation
401 M Street, S.W.
Washington, DC 20460

EPA Contract No. 68-01-6347, Work Assignment 1
JRB Contract No. 2-814-03-762-01

Submitted by:

JRB Associates, Inc.
8400 Westpark Drive
McLean, Virginia 22102

April 17, 1981

The research contained in this report was performed pursuant to Contract No. 68-01-6347, Work Assignment No. 1, with the Office of Analysis and Evaluation, United States Environmental Protection Agency. Findings and conclusions do not necessarily represent the views of the Agency.

TECHNICAL REPORT DATA
(Please read Instructions on the reverse before completing)

1. REPORT NO.	2. EPA 440/5-81-013	3. RECIPIENT'S ACCESSION NO. PB82-158072
4. TITLE AND SUBTITLE "Analysis of Wastewater Discharge from Marine Sanitation Devices"		5. REPORT DATE April 1981; Date of approval 6. PERFORMING ORGANIZATION CODE 039054
7. AUTHOR(S) N/A		8. PERFORMING ORGANIZATION REPORT NO.
9. PERFORMING ORGANIZATION NAME AND ADDRESS JRB Associates, Inc. 8400 Westpark Drive McLean, VA 22102		10. PROGRAM ELEMENT NO. JRB No. 2-814-03-762-01 11. CONTRACT/GRANT NO. EPA No. 68-01-6347, WA1
12. SPONSORING AGENCY NAME AND ADDRESS Office of Analysis & Evaluation U.S. Environmental Protection Agency 401 M Street, S.W. Washington, D.C. 20460	Tech. Adv. Jonathan Amson	13. TYPE OF REPORT AND PERIOD COVERED Final Report; Period N/A 14. SPONSORING AGENCY CODE

15. SUPPLEMENTARY NOTES

N/A

16. ABSTRACT

This report presents data pertinent to analyzing alternative Federal policies for regulating the discharge of human wastes from recreational watercraft. The study indicates that low compliance with the current marine sanitation device (MSD) regulations is the result of deliberate resistance, uncertainty about the finality of the current regulations, & doubt that the regulations will be effectively enforced. The report indicates that pleasure boats, particularly when congregated in relatively slow-moving waters, such as marina basins or inlets with minimal current or tidal action, can produce unacceptable fecal coliform concentrations. This is of particular concern because shellfish can accumulate sewage-borne microorganisms, rendering the shellfish unacceptable for human consumption. Of the two major disinfectant chemicals commonly used in MSD's (chlorine & formaldehyde), only chlorine has been shown to be toxic in the aquatic environment, but only in discharges from large shore-based facilities, such as sewage treatment plants. No study was found linking either chlorine or formaldehyde, when used as MSD disinfectants, with effects on the environment. MSD testing, which is conducted by the U.S. Coast Guard, has shown that if an MSD is properly installed & operated, concerns about odors, explosion from trapped gas, & constant maintenance are unwarranted. The report contains a bibliography of 145 entires, divided into seven pertinent sections.

17. KEY WORDS AND DOCUMENT ANALYSIS

a. DESCRIPTORS	b. IDENTIFIERS/OPEN ENDED TERMS	c. COSATI Field/Group
Sewage treatment; water pollution; waste water; water pollution	Marine sanitation devices; wastewater analysis; vessel discharges	Marine engineering; civil engineering

18. DISTRIBUTION STATEMENT Release unlimited	19. SECURITY CLASS *(This Report)* Unclassified	21. NO. OF PAGES 181
	20. SECURITY CLASS *(This page)* Unclassified	22. PRICE

EPA Form 2220-1 (9-73)

TABLE OF CONTENTS

Page

EXECUTIVE SUMMARY.....vii

1. INTRODUCTION.....3

1.1 PURPOSE OF THE REPORT.....3

1.2 CONSTRAINTS, APPROACH, AND ACKNOWLEDGEMENTS.....3

1.2.1 Constraints.....3
1.2.2 Approach.....4
1.2.3 Acknowledgements.....4

1.3 BACKGROUND.....4

1.3.1 Issues.....4
1.3.2 The Pleasure Boating Industry.....5
1.3.2.1 Number of Pleasure Craft in the United States.....7
1.3.3 Overview of Marine Sanitation Technology.....8
1.3.3.1 Type I Devices.....8
1.3.3.2 Type II Devices.....9
1.3.3.3 Type III Devices.....10
1.3.4 Legislative Background.....11
1.3.4.1 Initial MSD Regulations.....11
1.3.4.2 The Current MSD Regulation Program.....15

2. SECONDARY DATA - TECHNICAL DISCUSSION OF MARINE SANITATION DEVICES (MSD'S).....19

2.1 RESEARCH STRATEGY.....21

2.1.1 Computer Search.....21
2.1.2 Library Search and Other Information Retrieval.....22

2.2 SCIENTIFIC ISSUES.....24

2.2.1 Sewage Discharge to the Aquatic Environment.....24
2.2.1.1 Effects of Sewage from Recreational Watercraft.....25
2.2.2 Microbial Contamination.....25
2.2.2.1 General Effects of Pathogens on Aquatic Environmental Quality.....26
2.2.2.2 The Contribution of Recreational Watercraft in Fecal Coliform Assays.....28
2.2.3 Disinfectant Chemicals in the Aquatic Environment....30
2.2.3.1 General Discussion on the Effects of Disinfectant Chemicals.....30
2.2.3.2 Effect of Disinfectant Discharge from Watercraft.....36

TABLE OF CONTENTS

(continued)

Page

2.3 ENGINEERING STATE OF THE ART....36

2.3.1 Physical Constraints on MSD's....36
2.3.1.1 Space....38
2.3.1.2 Weight....38
2.3.1.3 Power Requirements....38
2.3.1.4 Additional Physical Considerations....39
2.3.2 Performance Data....39

2.4 COST CONSIDERATIONS....41

2.4.1 Cost Parameters....43
2.4.1.1 Type I and III Devices Only....43
2.4.1.2 Investment, Operation and Maintenance....44
2.4.1.3 Size of Boat....44
2.4.1.4 Effective Date of Regulations....46
2.4.1.5 Boats with Permanently Installed Toilets....46
2.4.1.6 Portable Toilets....46
2.4.1.7 Estimating 1980 and Beyond....48
2.4.2 Estimated Cost of Total Compliance with Existing Federal Regulations As of the End of 1979....48
2.4.3 Historic Costs of Policy Alternatives....48

2.5 "POPULAR PRESS" REPORTING OF THE MSD ISSUE....54

2.5.1 Environmentalists' Positions....54
2.5.2 Boating Interest Group Positions....55
2.5.3 Other Interest Groups....58

3. PRIMARY DATA ON KEY MSD INTEREST GROUPS....61

3.1 OBJECTIVE OF PRIMARY DATA COLLECTION....63

3.2 IDENTIFICATION OF THE "KEY PUBLICS" INVOLVED IN MARINE SANITATION....63

3.2.1 U.S. Coast Guard MSD Survey....64
3.2.2 Limitations of the Primary Data....65
3.2.3 Discussions with State Officials Concerning MSD Matters....65

3.3 OVERALL PERCEPTIONS OF THE MARINE POLLUTION PROBLEM....67

3.3.1 Effect of Regulation on MSD Compliance....69
3.3.2 Level of Enforcement Needed....69

3.4 RELATIVE IMPORTANCE OF MSD OPERATING CHARACTERISTICS....73

3.5 PRESENT STATUS OF STATE MSD-RELATED PROGRAMS....82

3.6 VIEWS CONCERNING A POSSIBLE CHANGE IN THE FEDERAL ROLE IN MSD REGULATION....87

TABLE OF CONTENTS

(continued)

APPENDICES

A. DISTRIBUTION OF PLEASURE BOATS IN THE UNITED STATES

B. ENGINEERING STATE OF THE ART

C. METHODOLOGY TO DETERMINE THE TOTAL COST OF THE FEDERAL MSD REGULATION

D. CURRENT FEDERAL MSD REGULATIONS

E. SUMMARY OF STATE LAWS GOVERNING WASTE DISPOSAL FROM WATERCRAFT

Part A: 1971 U.S. Summary
Part B: 1981 U.S. Summary
Part C: Overview of Marine Sanitation Regulations of the Province of Ontario, Canada

F. BIBLIOGRAPHY AND REFERENCES

LIST OF FIGURES

NUMBER	TITLE	PAGE
1.1	OUTDOOR ACTIVITY PARTICIPATION	6
1.2	PLEASURE BOATS IN THE UNITED STATES - 1979 SUMMARY BY REGION	7
1.3	COMPLIANCE DEADLINES FOR INSTALLATION OF MSD's ABOARD WATERCRAFT	18
2.1	COMPUTER SEARCH STRATEGY	23
2.2	CONCENTRATION OF AS HOCl REQUIRED FOR 99% KILL OF *E. COLI* AND THREE ENTERIC VIRUSES AT 0 TO 6°C	32
2.3	COMPARISON OF THE GERMICIDAL EFFICIENCY OF HYPOCHLOROUS ACID, HYPOCHLORITE ION, AND MONOCHLORAMINE FOR 99 PERCENT DESTRUCTION OF *E. COLI* AT 2 TO 6°C	32
2.4	ACUTE AND CHRONIC TOXICITY THRESHOLD FOR MARINE AND FRESHWATER ORGANISMS EXPOSED TO CHLORINE	33
2.5	DEGRADATION PROCESS FOR CHLORINE IN SALINE WATER	34

LIST OF TABLES

NUMBER	TITLE	PAGE
2.1	PATHOGENIC ORGANISMS COMMONLY FOUND IN WASTEWATER	27
2.2	CERTIFIED MARINE SANITATION DEVICES SUITABLE FOR USE ON SMALL VESSELS	37
2.3	RESULTS OF CRUISING WORLD'S MSD SURVEY	40
2.4	ESTIMATED INVESTMENT, OPERATION AND MAINTENANCE COSTS BY BOAT SIZE (CURRENT DOLLARS)	45
2.5	ESTIMATES OF THE BOATS AFFECTED BY THE FEDERAL MSD REGULATIONS 1977 TO 1979	47
2.6	ESTIMATED NUMBER OF BOATS REQUIRING MSD'S MANUFACTURED EACH YEAR SUBSEQUENT TO 1979	49
2.7	ESTIMATED TOTAL COMPLIANCE COST OF FEDERAL MSD REGULATION OVER 1977 - 1979 PERIOD	50
2.8	ESTIMATED COST OF 100% COMPLIANCE WITH FEDERAL MSD REGULATIONS EACH YEAR AFTER 1979	51
2.9	ESTIMATED COMPLIANCE COSTS FOR ALTERNATIVE POLICY OPTIONS OVER THE 1977 - 1979 PERIOD	53
3.1	BREAKDOWN OF RESPONSE TO U.S. COAST GUARD MSD SURVEY	64
3.2	GENERAL OCCUPATIONAL CATEGORY OF STATE PERSONNEL CONTACTED ON MSD ISSUES	66
3.3	PERCEPTION OF PUBLIC ATTITUDES TOWARD MSD REQUIREMENTS	68
3.4	PERCEPTION OF THE IMPACT OF REGULATIONS ON INSTALLATION OF MSD'S ON PLEASURE CRAFT	70
3.5	PERCEPTION OF DEGREE OF ENFORCEMENT REQUIRED TO ENSURE PROPER USE OF TYPE II MSD	71
3.6	ESTIMATION OF PERCENTAGE OF RECREATIONAL VESSELS WITH MSD'S	72
3.7	MAJOR FACTORS DISCOURAGING THE USE OF MSD'S	74
3.8	MSD PRICE RANGE ESTIMATES	75
3.9	RELATIVE IMPORTANCE OF MSD (TYPE II) OPERATING CHARACTERISTICS	77
3.10	REASONS TYPE I FLOW-THROUGH MSD SELECTED OR NOT SELECTED	78
3.11	REASONS TYPE II FLOW-THROUGH MSD SELECTED OR NOT SELECTED	79
3.12	REASONS TYPE III-HOLDING TANK MSD SELECTED OR NOT SELECTED	80
3.13	REASONS TYPE III-RECIRCULATING MSD SELECTED OR NOT SELECTED	81

LIST OF TABLES
(continued)

NUMBER	TITLE	PAGE
3.14	EXISTENCE OF STATE LAWS REGULATING SEWAGE DISCHARGE FROM WATERCRAFT PRIOR TO FEDERAL PREEMPTION	83
3.15	PROBABLE CHANGE IN STATE'S POLICY REGARDING MARINE SEWAGE DISPOSAL	84
3.16	EXPLANATION OF POSITION REGARDING CHANGE OF STATE MARINE SEWAGE DISPOSAL POLICY	85
3.17	STATE SUPPORT FOR STRICTER COAST GUARD ENFORCEMENT OF MSD REGULATIONS	86
3.18	EXPLANATION OF POSITION REGARDING LEVEL OF COAST GUARD ENFORCEMENT	88
3.19	THE STATES' VIEW OF CURRENT FEDERAL MSD REGULATIONS	89
3.20	STATE RESPONSE IF THE FEDERAL MSD REGULATIONS WERE ELIMINATED	90

EXECUTIVE SUMMARY

EXECUTIVE SUMMARY

This report presents data pertinent to analyzing the desirability of alternative Federal policies for regulating the discharge of human wastes from recreational watercraft. The purpose of the report is to provide EPA personnel with a data base from which to develop a policy options paper on marine sanitation device (MSD) regulations. The report was compiled over a seven week period in fulfillment of U.S. Environmental Protection Agency contract number 68-01-6347, Work Assignment 1. The reader is cautioned that the findings and projections presented in this report are intended to provide policy guidance and are not finely tuned estimates derived from large-scale statistical sampling and original scientific research.

In response to the Work Assignment, the data presented address the following basic issues relative to discharge of sewage from recreational watercraft:

- Legislative background;
- Interest group opinions and positions;
- Human health and aquatic effects;
- Engineering state-of-the-art; and
- Regulatory compliance costs.

The methodology for data collection consisted of: (1) interrogating machine readable literature data bases containing references to over 10,000 documents; (2) supplemental library research to try to identify secondary data sources not covered by the automated literature searches; and (3) contacting individuals identified from the literature, Federal and State government personnel, and other sources especially knowledgeable about specific topics. Production of this report in the limited time available was greatly facilitated by the Merchant Marine Technical Division (G-MMT-3) and the Prevention and Enforcement Division (G-WPE-1) of the U.S. Coast Guard; the David W. Taylor Naval Ship Research and Development Center, Annapolis Laboratory, that is conducting MSD research work for the Coast Guard; and the EPA technical advisor, Jonathan Amson, who guided the overall project and the review of the information EPA had compiled on this subject.

Legislative Background. Interest in regulation of pollution generated by pleasure boats developed from the State level to the point that in the early

1970's about 30 States regulated the discharge of sewage from boats. The lack of uniformity among these State laws created situations in which a boater could be in compliance on one side of a river and out of compliance on the other; this lead to a growing interest in national, uniform MSD regulations. In 1975 and 1976, the Federal government promulgated the current regulations, which: (1) classify waters as either "treated effluent" or "no-discharge;" and (2) mandate that all boats with permanent toilets have installed either Type I or Type II MSD's for treated effluent waters, and Type III MSD's for no-discharge waters. EPA is responsible for promulgation of MSD standards of performance and the U.S. Coast Guard is responsible for certification of MSD's and enforcement of the regulations. Very little data could be found regarding compliance with these regulations, but they are widely acknowledged to be poorly enforced and ignored by many boaters (e.g., one source estimates national compliance at 25% currently).

Interest Group Positions. The primary and secondary research for this study indicates that low compliance with the MSD regulations is the result of: deliberate resistance; a high degree of uncertainty and ambiguity about the finality of the current regulations (i.e., the requirements may change again); and doubt that MSD regulations will ever be effectively enforced.

The research did not locate any statistically valid surveys of the attitudes of boaters and non-boaters, or of any other key interest group, concerning MSD's. However, the positions of the key groups can be characterized as follows, based on views expressed in available non-random surveys, in articles and books, and in discussions held during the course of this project with many people knowledgeable about MSD's:

- Boaters and major boating organizations are regarded as opposing the MSD regulations because many boaters contend that:
  - they do not make a consequential addition to the pollution loading of the freshwater and marine environments
  - MSD technology is still undeveloped posing a weight, space, maintenance, and safety (to the extent it is believed the devices may explode from trapped gas) burden on boaters who often use their craft only several months a year
  - they are the target of overly zealous and misguided government environmental regulations that should be repealed;
- The non-boating public is viewed as supportive of MSD regulations, but are not very well-informed about the MSD controversy and are too

diffuse a group to counter the impact of the well-organized national boating interest groups;

- MSD manufacturers and boat manufacturers are confused with respect to how to plan in light of changing requirements and generally believe that much stricter enforcement will be required to gain compliance with the current regulations; and
- States doubt the Federal government's ability to enforce the MSD regulations. While the Federal regulations supercede those of the States, a majority of State officials believe that the Federal government's level of enforcement is not sufficient to protect State waters. In fact, more than half of the States contacted indicated that their State had discharge regulations that equalled or surpassed the Federal regulations in stringency and none of these officials said that their State would be unable to mount a viable regulatory program in the absence of Federal enforcement capabilities.

Health and Aquatic Effects. There is limited research that assesses the direct effects of sewage discharge from recreational watercraft on the incidence of waterborne disease and the degradation of the aquatic environment. None of the studies reviewed directly correlated oxygen depletion, nutrient levels, and disease incidence with pleasure craft sewage discharge alone. As a result, the public health justification for requiring MSD's is largely based on the well-documented health effects resulting from the discharge of sewage from land-based sources.

There are a number of studies that show the contribution of recreational vessels to increased levels of enteric bacteria (e.g., fecal coliform), which can be considered as an indirect measure of the potential for waterborne disease. These studies have shown that pleasure boats, particularly when congregated in relatively slow-moving waters (e.g., marina basins, inlets with minimal current or tidal flushing action), can produce unacceptable fecal coliform concentrations. This is a particular concern because shellfish can accumulate sewage-borne microorganisms rendering them unfit for human consumption.

No studies have been found in the literature that discuss the effects of disinfectant discharge from certain MSD's into the environment. Of the two major disinfectant chemicals commonly used in MSD's -- chlorine and formalde-

hyde -- only chlorine has been shown to be toxic in the aquatic environment. However, no study was found linking either chlorine or formaldehyde, when used as MSD disinfectants, with effects on the environment.

Engineering State-of-the-Art. There are three basic categories of marine sanitation devices that are identified as Types I, II, and III. Type I and II MSD's are flow-through devices that produce an effluent meeting a specific fecal coliform bacteria count per 100 milliliters (currently less than 1,000 for Type I and 200 for Type II). Type I devices must also produce no visible floating solids. Effluent from Type II devices can contain no more than 150 mg/l total suspended solids. Type III MSD's are defined as no-discharge devices. This type covers holding tanks, incineration devices, and recirculating devices that retain shipboard wastes for disposal onshore.

Only Types I and III are now available in a wide range of models to fit recreational vessels. Because of cost and size constraints, Type II devices are presently unsuitable for the majority of pleasure craft. MSD testing, which is overseen by the U.S. Coast Guard, has shown that if a MSD is properly installed and operated, concerns about uncontrollable odors, risk of explosion from trapped gas, and constant maintenance are unwarranted. Factors other than the design of the device itself, such as the limited number of pumpout facilities available to service Type III devices, can limit the application and acceptance of the available technologies.

Compliance Costs.* A review and analysis of available data related to the costs of MSD's leads to the following observations:

- Of the approximately eight million pleasure boats registered in the U.S. today, three million are in the 16 to 65 foot range, and only about 0.35 million (12%) of these (4% of total boats) could have been directly affected by Federal regulations over the 1977 to 1979

* Note that the main body of the report presents range (upper and lower bound) estimates for the number of boats affected by Federal regulations and related cost estimates. For purposes of brevity, only single range, mid-point estimates are set out here. An exception is that the estimated total number of recreational watercraft in the United States ranges from eight to eleven million. The eight million figure is used here because most, if not all, of the three million additional watercraft counted in the eleven million total appear to be under 16' without installed toilets and thus are not affected by current MSD regulations.

period. From 1979 on, it is estimated that an additional 35,000 newly manufactured boats would come under current Federal regulations each year. The numbers are small because only boats with permanently installed toilets (which are usually at least 22 feet in length) are covered by the regulations and because most boats use portable toilets or shore facilities.

- Type I devices are more costly than Type III holding tanks, adding an estimated average of $1,000 (1.5%) to the initial (investment) cost of each boat and an average of $18 in annual operating and maintenance costs.
- Type II devices are generally unsuitable for small craft and are more expensive than Type I devices.
- Type III holding tanks (no-discharge) are the least costly with an estimated average investment cost per boat of $350 (0.5%) and average annual operating costs of $43.
- It would require about 25 years to recoup the investment cost difference from operating costs savings on the Type I device versus the Type III device, but boaters appear generally opposed to holding tanks.
- A Federal MSD regulation that required all Type III holding tank devices would cost 50% less than the current regulations (with estimated 100% compliance costs of $235 million). This assumes 100% compliance by 16′ to 65′ boats with installed toilets in both cases and that a mix of Type I and Type III devices are utilized to comply with current regulations.
- Boat owners complain that a major impediment to utilization of holding tanks is the absence of adequate pumpout facilities. The presence of pumpout facilities is a Federal requirement for designation of no-discharge waters by States. Some potential providers of pumpout facilities claim that demand is insufficient to justify offering the service. From these positions emerges a stand-off. By way of contrast, a free market economy would assume that adequate pumpout facilities would evolve to meet demand; e.g., if holding tanks were mandatory. Options to broaden the availablity of pumpout services include tax incentives, guaranteed loans, outright grants, and mandatory provision through legislation.

- A sewage or septic system (now mandatory in most areas) for a summer home (like a boat, a discretionary leisure expense) is likely to cost $2,000 or more. In comparison, installation of a MSD (even the more costly Type I) on a pleasure boat is much less expensive than the waste treatment system a summer home requires.

Substantial additional research would be required to support a firm recommendation regarding any change in the MSD regulations. However, the available data suggest that if cost/benefit and cost/effectiveness analyses were applied with respect to MSD's, a recommendation to adopt a uniform Type III holding tank regulation with almost exclusively local (optional) enforcement would result.

The final question, of course, is whether there is a compelling case for changing current Federal policy. Existing legislation provides for delegation of MSD enforcement to States and designation of no-discharge waters by the States. The decision to maintain or to change the current MSD requirements is the prerogative of the U.S. Congress.

CHAPTER 1

INTRODUCTION

Intentionally Blank Page

1. INTRODUCTION

1.1 PURPOSE OF THE REPORT

This report is produced to satisfy the requirements for Work Assignment 1 of EPA Contract Number 68-01-5347. The purpose of this Work Assignment is to assemble existing data and perform related analyses regarding: (1) the effectiveness and acceptability of marine sanitation devices (MSD's); (2) the alternative roles of the States in setting and enforcing marine sanitation standards; (3) the scientific justification for marine sanitation standards; and (4) the impact of MSD regulation on the boating industry and the feasibility of minimizing this impact through alternative forms of regulation. The data and analyses in this report are intended to serve as supporting (appendix) material for a MSD policy options paper prepared by the EPA.*

1.2 CONSTRAINTS, APPROACH AND ACKNOWLEDGEMENTS

1.2.1 Constraints

The EPA required an unusually quick turnaround time on this project -- seven weeks. In addition, the data collection effort had to be managed with discretion because of the political sensitivity of the marine sanitation device issue; continuing strong opposition to the current MSD regulations by many boaters and boating organizations is anticipated. Other constraints involve compliance with legislation and regulations regarding data-gathering. In assessing the information in this report it must be remembered that the findings and projections presented are intended to provide policy guidance and are not finely tuned estimates derived from large-scale statistical sampling and original scientific research.

---

* Note that all references are contained in the Bibliography in Appendix F; footnote numbers indicate the sequential listing of the cited reference.

1.2.2 Approach

To accomplish the purpose within the constraints of the effort, both secondary and primary data were collected. Secondary data were located via computer assisted literature searches and by review of bibliographies from identified sources. Primary data were collected by contacting experts on various topics as determined from a review of the literature and other sources, acquiring data from a U.S. Coast Guard-sponsored MSD study being conducted by the David W. Taylor Naval Ship Research and Development Center (NSRDC), and by contacting State officials involved in marine sanitation. The balance of this section presents additional background material. Chapter 2 presents results of the secondary data collection effort supplemented by information from expert sources. Chapter 3 contains the U.S. Coast Guard/NSRDC data and analysis as well as input from the State officials.

1.2.3 Acknowledgements

Appreciation is due many individuals and organizations for the contributions they made to this report, and for making it possible to complete the task within the time frame and other constraints. Especially noteworthy were the Merchant Marine Technical Division (G-MMT-3) and the Prevention and Enforcement Division (G-WPE-1) of the U.S. Coast Guard; the David W. Taylor Naval Ship Research and Development Center; and Mr. Jonathan Amson, Biological Service Administrator, Office of Water Regulations and Standards (EPA), who acted as Technical Advisor on the project. Perhaps needless to say, any errors that remain are the responsibility of JRB Associates, Inc. and its primary staff for this project, Dr. Paul Cumming, Mr. Rees Toothman, and Mr. Daniel Young.

1.3 BACKGROUND

1.3.1 Issues

During the 1960's, pollution from all types of waterborne vessels came under greater scrutiny as the result of mounting public interest in improving the quality of the nation's waters. Owing to the rapid growth of recreational boating as a major American pastime, the wastes discharged from pleasure craft did not escape attention. Since the initiation of regulations covering sewage

discharges from pleasure craft by several States, laws and regulations pertaining to marine sanitation have been subjected to criticism from many quarters. Within the last decade the Federal government has assumed the principal role in marine sanitation regulation and, today, almost all aspects of the current Federal requirements for marine sanitation devices on pleasure craft are the subject of heated debate.

Despite the controversy about marine sanitation regulations, there has been little attention paid to compiling the body of knowledge regarding the need for and effectiveness of MSD's on pleasure craft. Among the issues that need to be addressed by analysis of existing evidence are the following assertions:

- The MSD regulations are difficult if not impossible to enforce;
- The need for and effectiveness of the MSD standards in protecting the environment has not been adequately demonstrated;
- The means to achieve the MSD standards are not cost-effective; and
- State marine sanitation programs adequately address State needs.

This report is structured to present the data available to examine these assertions.

The balance of this chapter presents general background material on the size and characteristics of the pleasure boat population, the basic types of treatment technology available today, and the legislative history of MSD regulations.

1.3.2 The Pleasure Boating Industry

Throughout United States history, watercraft have played a significant role in the shaping of our modern economic system. Today 95% of the nation's population lives in the 38 States that have commercial transportation services provided by vessels operating on rivers, canals, bays, sounds or lakes. Of the 150 cities having populations of 100,000 or more, 131 are located on commercially navigable channels.[85] Ease of access to navigable waterways has encouraged the growth of recreational boating. The popularity of boating as an outdoor activity is shown in 1977 data compiled by the U.S. Heritage Conservation and Recreation Service, which is reported in Figure 1.1. That survey indicated pleasure boating activities attracted more participants than hunting, golf or tennis. A mid-1970's study predicted recreational boating

will continue to be a growing attraction. The study estimated that in 1980, 93 million Americans would go boating, and that by the year 2000, 163 million would participate.[131]

FIGURE 1.1
OUTDOOR ACTIVITY PARTICIPATION (1976-77)
(Millions of People 12 Years or Older)

Activity	Participation	5 Times or More
Canoeing, kayaking, etc.	26.9	9.0
Sailing	19.1	7.8
Water skiing	26.8	13.1
Other boating	57.3	34.3
Fishing	91.0	61.9
Hunting	32.6	24.5
Camping in remote or wilderness areas	36.0	15.0
Camping in developed campgrounds	51.8	21.0
Golf	27.1	18.9
Tennis	55.7	40.9
Riding off-road vehicles	43.6	33.8
Bicycling	79.4	66.1
Going to outdoor sports events	104.3	75.5

Source: Statistical Abstract of the United States: 1980 (101st Edition), U.S. Bureau of the Census, Washington, D.C., 1980.

Reflecting boating's growing popularity, consumer expenditures on boating have risen sharply. During the period from 1950 to 1979, the U.S. Gross National Product grew from $286 billion to $2.369 trillion, an increase of 828 percent.[141] During the same 30 years, it is estimated that the amount of money Americans spent on boating rose from $680 million[131] to $7.5 billion,[141] an increase of 1103 percent. This rise in consumer spending on boating is illustrated by the fact that in 1963, when inboard-outdrive cruisers became numerous enough to be counted, sales totaled 8,000 units.[131] In 1979, 89,000 units were sold, an increase of 1113 percent.[141]

The growth of boating is, of course, one reason for concern about the wastes generated onboard recreational vessels. The balance of this document focuses on the characteristics of the pleasure boat population; commercial vessels are governed by the same regulations, but they are outside the scope of this study.

1.3.2.1 Number of Pleasure Craft in the United States

There are now approximately eight million pleasure craft registered in the United States according to statistics compiled annually by the National Marine Manufacturers Association (NMMA). Because State boating registration laws differ in terms of the length of the registration period and the types of craft covered, the NMMA's figures are a best estimate of the registered boat population in a given year. Because not all waterborne craft must be registered, it is even more difficult to estimate the total number of vessels of all types used for recreational purposes (including canoes, inflatable rafts, etc.). Industry sources indicate that an accounting of all recreational vessels would add up to a total of approximately 11 million, roughly three million more than the number accounted for under current State boating registration laws.

Because all States and U.S. Territories require registration of motor boats, and the fact that nearly all sailboats large enough to have an installed toilet also have an auxiliary engine, the population of registered boats includes virtually all vessels that are covered by the MSD regulations. Figure 1.2 presents a regional summary of the number of pleasure craft registered in the United States. The number of boats registered in each State is presented in Appendix A together with a brief description of each State's registration requirements.

FIGURE 1.2
PLEASURE BOATS IN THE UNITED STATES - 1979
SUMMARY BY REGION

	No. of Boats	Percent
New England	427,135	5.2%
Middle Atlantic	1,481,082	17.9
Gulf Coast	1,591,722	19.2
East Central	734,776	8.9
Great Lakes	2,222,263	26.8
West Coast	874,161	10.6
Midwest/Mountains	878,210	10.6
Non-contiguous	69,374	0.8
Total U.S.	8,278,273	100.0%

Source: Boating Registration Statistics 1979, National Marine Manufacturers Association (Marex); Chicago, IL.

The data in Figure 1.2 reveal that there are a substantial number of boats in all areas of the country. However, there are noticable differences among the regions and States in the number and concentration of pleasure craft. The Great Lakes region has the largest number of registered boats and it also has the greatest concentration of boats per 1000 residents as shown in Table A.2 of Appendix A. The value of interpreting the concentration of boats after adjusting for population is illustrated by comparing the boat registration data for Michigan and Minnesota. While the difference in the absolute number of boat registrations in insignificant, 571,007 in Michigan compared to 563,850 in Minnesota, Minnesota has more than twice and many registered boats per 100 residents (139 versus 62). Thus, one would expect to find participation in boating among the general public in Minnesota to be about twice as common as it is among all the residents of Michigan.

This brief review of the boating industry and the number of boats in the U.S. provides a basic understanding of the overall population potentially affected by marine sanitation regulations. Later, in Section 2.4 of Chapter 2, the boat population statistics will be more closely examined in regard to estimating the number of boats that must comply with Federal MSD regulations.

1.3.3 Overview of Marine Sanitation Technology

To make the forthcoming section concerning the development of MSD regulations more understandable, it is necessary to discuss briefly the operating characteristics of the three basic categories of marine sanitation devices. These are identified as Types I, II, and III. The subsections below distinguish the principal operational differences of the three basic types of MSD's. Appendix B of this report offers a more detailed description of the treatment technologies now employed. Section 2.3 in Chapter 2 discusses the principal engineering and design problems presented by MSD's.

1.3.3.1 Type I Devices

A Type I device is defined as a flow-through device that produces an effluent that meets a specific fecal coliform bacteria count (currently less than 1000 per 100 ml) and contains no visible floating solids. This type of device usually is constructed with a macerator to reduce solids to less than "visible" size, and uses chemical additives to reduce fecal coliform count.

Type I devices receive sanitary waste in a macerator (or mill) that reduces the size of the solids. The mill is somewhat similar to a blender in which turbulence and shear are induced by a high speed rotating blade to tear apart solids and thoroughly blend the materials. Common practice is to drop a sodium hypochlorite tablet or other disinfectant chemical into the device and turn on the mill for a specific time period (up to 5 minutes). This results in dispersion of the disinfectant as well as maceration of the solids.

The size requirements of this type of MSD are relatively modest. Each batch of material to be macerated needs to be no larger than the flush volume of the marine toilet, although some manufacturers have included holding tanks after treatment for the equivalent of up to 30 flushes. This improves system efficiency and allows operation in no-discharge waters. The extra weight associated with Type I devices is relatively minor and depends primarily on the volume of waste held prior to batch treatment and direct overboatd discharge.

Power requirements for Type I MSD's are not great as shown in Table 2.2 in Chapter 2. However, the lack of power on the water can present problems. Sailboats, for instance, operate their running lights off a small battery pack. Even a small power requirement can deplete this power source if used over an extended period of time without recharge. Powerboats frequently have generators to recharge the battery pack, and therefore are not as susceptible to power drain.

1.3.3.2 Type II Devices

Type II devices are defined as flow-through devices that produce an effluent that meets a specific fecal coliform bacteria count (currently less than 200 per 100 ml) and contains no more than 150 mg/l total suspended solids. Type II units are the most sophisticated of the three types of MSD's.

Various manufacturers have used different treatment technologies to attain the degree of waste treatment required in Type II systems. This type of device is usually designed to remove or break down solids from the waste stream by bacterial action. In these systems, naturally occurring microbiological organisms break down the sewage; chemicals are used as disinfectants for fecal coliform reduction. A means of removing suspended solid

material from the waste such as sedimentation or filtration is usually necessary.

While Type II systems are feasible in larger vessels, they are not considered a viable alternative for pleasure craft under 65 feet in length. This is due to the generally larger size, weight, power consumption, maintenance requirements, and initial capital expense of Type II systems as compared to Type I or III systems. In addition, Type II systems usually generate sludge from the treatment process and this sludge has to be properly disposed of.

1.3.3.3 Type III Devices

Type III MSD's are defined as no-discharge devices. This type is typically a holding tank that receives shipboard waste and retains it for disposal onshore. The tank must be emptied periodically into a shoreside pumpout facility or into waters that are not restricted to discharge of sewage wastes. Type III MSD's also include incineration devices that reduce the sewage discharge totally to ash and recirculating devices that treat the liquid for reuse as the flushing medium.

The requirements of a Type III MSD are very simple and straightforward: the system must provide for no discharge of sewage wastes from the vessel. The method of complying with this requirement in Type III MSD's can be as simple as a holding tank, which stores sewage wastes (usually with disinfectants and deodorants added) until the tank can be pumped out at a shore-based facility or in an unrestricted discharge zone; or as sophisticated as a total recycle system, which treats the sewage wastes so effectively that the water can be continually reused (most total recycle systems will require periodic removal of waste buildup in the system and/or addition of new chemicals or materials to maintain efficiency).

Most Type III MSD's are of the holding or storage tank variety. The initial capital costs of installation of this system and subsequent maintenance costs and requirements are the lowest of the three types of MSD's. Power requirements, if any, are minimal. The holding tank must be properly sized for the amount of wastes it will be required to hold, and the sizing of the tank will be dependent on such factors as number of persons using the vessel, availability of shore-based pumpout facilities and length of

time between pumpouts, and frequency that the vessel operates in unrestricted discharge zones.

Methane generation in holding tanks does not present a problem, but odors can develop if the tanks are not properly designed and maintained. More complex Type III MSD's, such as recycle systems, are usually suited only for large vessels for the same reasons that were stated for Type II MSD's. A Type I or Type II MSD must be supplemented by a Type III unit (holding tank) if it is to be used in no-discharge waters. However, the current regulations do not prohibit carrying only a Type I or II device (with no holding tank) if they are secured when in a no-discharge area.

1.3.4 Legislative Background

Federal legislation dealing with various aspects of watercraft pollution control has existed since the New York Harbor Act of 1888 and the Refuse Act of 1899. Not until the early 1960's, however, was serious attention given to the establishment of regulations prohibiting the discharge of untreated sewage from all types of watercraft into the nation's waterways.

State and local officials took the first steps to control sewage discharge from watercraft. Two solutions suggested were to temporarily retain waste onboard for later discharge at a shoreside facility, or to treat the effluent to an acceptable level of purity before discharge.

1.3.4.1 Initial MSD Regulations

The State of New Hampshire was among the first States to take steps to ensure local quality of water by controlling the discharge of vessel wastes. The State specified that flow-through waste processing devices (Type I macerator-chlorinators) be installed onboard all boats used on its inland lakes, specifically Lakes Sunapee and Winnipesaukee. Standards for size of suspended solid particles and bacterial coliform count were set.

Additionally, the Lake George [NY] Association, working with the New York State Department of Environmental Conservation, set a no-discharge (Type III holding tank) standard for that body of water.

By the late 1960's, the controversy about these two types of systems intensified. Advocates of macerator-chlorinators said:

- The macerator-chlorinator at least offers some treatment of boat waste materials;
- Waste pumped from holding tanks often is returned, virtually untreated, to the waterway anyway;
- There are no holding tank pumpout stations in most areas;
- Dealers report great resistance to voluntary installation of holding tank pumpout stations; and
- There are no legislative plans to require, or provide, any holding tank pumpout stations.

Conversely, the advocates of holding tanks felt:

- A tank retains all materials that could harm a waterway;
- There are no fail-safe provisions effectively installed on any macerator-chlorinator;
- Particulate size from the macerator-chlorinator is too large to be of anti-pollution value; and
- No evidence has been given that macerator-chlorinators have any effect on viruses.

Within a short time other States began to adopt either holding or treatment requirements. For the most part, the two methods were mutually exclusive; treatment devices that had no holding capabilities whatsoever could not be used in no-discharge areas; and, pumpout facilities were not available to holding tank users in waters where treatment systems were used. In some cases vessels equipped with one system could not legally cross from one side of a river a few hundred feet to the other side.

As noted earlier in the chapter, the concern about water pollution that was forcefully expressed in the 1960's naturally drew attention to the problem of wastes discharged from watercraft. This concern, coupled with a desire to remove the barriers to free passage set up by conflicting State marine sanitation laws, provided the impetus for Federal involvement in marine sanitation regulation. In 1967, the problem of wastes eminating from the nation's commercial and recreational vessels was examined in a report to Congress

entitled, "Wastes from Watercraft." This report from the Federal Water Pollution Control Administration said:

> As in other spheres of American life, the achievement of affluence and prosperity has not been without expense to the quality of our natural environment. This report to the Congress will show that the threat to our navigable waters through pollution from vessels of all descriptions is formidable, and, above all, needless. The report will also show that the means to stop this degradation and to begin enhancing this resource over the total range of beneficial public uses, are either in hand or can be secured through the additional legislative and other measures which are recommended [in this report].[110]

The report argued that it made "little sense" to clean up municipal and industrial wastewater without also controlling waste discharge from watercraft, especially because areas of heavy vessel traffic are usually located in densely populated areas.

The report stressed that the growth in the number of recreational vessels made pleasure boats a growing source of the pollution load from all watercraft:

> The problem of pollution from watercraft is both widespread and varied. In a sense, it is also a new problem. It is new because watercraft -- particularly recreational boats -- have increased to such numbers that their once negligible wastes are becoming a significant factor in the overall pollution picture. And it is new because it has been caught up in the mounting public concern about all forms of pollution.
>
> The problem is widespread because vessels and boats frequent all navigable water areas of the Nation and may trigger local pollution at any point along their path. Pleasurecraft congregating for weekend fun may suddenly impose a load of untreated wastes, equivalent to those of a small city or town, on the waters they use.[110]

To respond to the vessel pollution problem, a program of Federal legislation covering both commercial and recreational vessels was outlined in the report.

The recommendations of this report were the foundation of Section 13 of the Water Quality Improvement Act of 1970. Section 13 directed the Federal Water Pollution Control Administration of the Department of the Interior (which less than six months later became the Environmental Protection Agency) to develop and promulgate standards of performance for MSD's that would prevent discharge of raw or improperly treated sewage from vessels equipped with toilets into the waters of the United States.

The law prohibited States from adopting or enforcing any statutes or regulations governing the design, manufacture, installation, or use of any MSD on any vessels subject to the statutory requirements. However, States were given the opportunity to apply to the EPA Administrator for issuance of a regulation completely prohibiting any discharges into certain State waters.

EPA proposed regulations on May 12, 1971 prohibiting discharges of sewage from vessels with installed toilets which contain visible floating, or settleable, solids, coliform bacteria in excess of 240 per 100 ml, biochemical oxygen demand in excess of 100 mg/l and suspended solids in excess of 150 mg/l. The preamble to the proposed regulations noted that flow-through devices meeting the proposed standards had not yet been developed for certain smaller classes of vessels but stated that development of such devices before the effective date of the standard was within the limits of available technology. The preamble went on to note that holding tanks were available on the market and could be used to meet the standards.

Over 6,000 comments were received in response to the proposed regulations, and five public meetings were held. During the comment period, many groups stated their opposition to the proposed MSD standards, particularly the proposal to require holding tanks for certain smaller vessels. The U.S. Coast Guard, which was given enforcement responsibility under provisions of the Water Quality Improvement Act, also opposed the proposed regulations because detection of violations of the law would be extremely difficult, and Coast Guard manpower was simply not available to fully enforce the law.

Despite this opposition, EPA abandoned the concept of standards based upon effluent limitations and instead promulgated Federal standards of performance for marine sanitation devices on June 23, 1972, that provided for no overboard discharge of sewage into the navigable waters of the United States from vessels with installed toilets with certain limited exceptions. Existing vessels equipped with Type I's within three years from the date of promulgation of Coast Guard implementing regulations were not required to comply with the no-discharge requirements as long as the Type I remained operable. In essence, EPA's standard called for zero discharge of treated or untreated wastes with an "incentive" clause to encourage existing vessels to install Type I MSD's before the effective date of the standards.

1.3.4.2 The Current MSD Regulation Program

In 1972, Congress amended the Federal Water Pollution Control Act (FWPCA) and included the present requirements for MSD's. Section 13 of the Water Quality Improvement Act was brought forward with certain amendments into the FWPCA as section 312. Section 312(b)(1) directed EPA to promulgate standards of performance for MSD's which were to take effect or new vessels two years from the date of promulgation and for existing vessels five years from the date of promulgation. The Coast Guard was directed to promulgate regulations governing the design, construction, and installation and operation of MSD's and was required to enforce EPA's standards of performance.

In addition, the 1972 amendments added two new subparts to Section 312 of the FWPCA under which EPA and the States could prohibit the discharge of vessel sewage into certain specified waters. Section 312(f)(3) provides that if any State determines that the protection and enhancement of the quality of some or all of its waters requires greater environmental protection, such State may completely prohibit the discharge from all vessels of any sewage, whether treated or not, into such waters, if the Administrator of EPA determines that adequate facilities for the safe and sanitary removal of sewage from all vessels are reasonably available. As of March, 1981, a total of eighteen petitions had been received by the Agency under Section 312(f)(3). Of these, fifteen were approved, one was denied on procedural grounds, one was denied on technical grounds, and one was pending.

Section 312(f)(4) states that if the Administrator determines upon application by a State that the protection and enhancement of the quality of specified waters within such State requires a prohibition on the discharge of any sewage (whether treated or not) he shall by regulation completely prohibit such discharge. EPA has received three petitions under Section 312(f)(4). Of the three, one has been approved, and two were denied on procedural grounds.

The Coast Guard published final regulations for the design and construction of MSD's on January 30, 1975. The regulations (presented in full in Appendix D) covered the testing procedures and these important definitions were made:

- Through-hull fittings were allowed and the limits of the regulations were established at three miles (the limit of the territorial sea). These two factors made it possible for off-shore vessels to dump untreated waste at sea.

- Portable devices were not included in the regulations (eliminating the need for their testing) because only installed toilets are covered by the legislation.

Under the final Coast Guard regulations, vessels can be categorized according to the type of system they must install and when it must be operational. The equipment appropriate for a vessel would depend on its intended use, its age and the space available for an MSD.

Following passage of the 1972 FWPCA Amendments, EPA reconsidered its previously promulgated MSD standards of performance. EPA proposed new standards on October 10, 1975, and after consideration of additional comments, revised its final standards of performance for marine sanitation devices on January 29, 1976. EPA's new standards (presented in full in Appendix D) provided that existing vessels equipped with a Type I device before January 30, 1978 could retain that device for its operable life. All existing vessels that were not equipped with Type I's by January 30, 1978, were required to install an operable Type II by January 30, 1980. Vessels that were under construction before January 31, 1980 and which were equipped with a Type I device by January 31, 1980, could retain that device for its operable life. All other new vessels had to install Type II's. Waters where U.S. Coast Guard-certified MSD's may be used include coastal waters and estuaries, the Great Lakes and interconnecting waterways, freshwater lakes and impoundments accessible through locks, and other flowing waters that are navigable interstate by vessels with installed toilets. The standards do not apply to vessels that are not equipped with installed toilets.

In formulating the new standards, EPA also took into account the fact that certain water bodies, such as those with relatively long detention periods that cannot cleanse themselves easily through natural processes, should be given a higher degree of protection than other waters. The 1976 regulations therefore prohibited the discharge of sewage from vessels in freshwater lakes, reservoirs, or impoundments whose inlets or outlets prevent the ingress or egress by vessels with installed toilets, or in rivers not capable of navigation by interstate vessel traffic.

Existing vessels in waters subject to no-discharge requirements were required to install Type III devices designed to prevent any discharge by January 30, 1980; new vessels in these waters were required to be equipped by

January 30, 1980. However, even in no-discharge areas, vessels equipped with Type I's as of the date of promulgation of the standards were permitted to retain the devices for the life of the device.

Some boaters believed that EPA would not retain the Type II MSD deadline. When it became evident toward the end of 1977 that the Agency intended to retain the deadline, there was a considerable demand for Type I MSD's. As a result, there were not enough devices available at retail dealers for all potential customers. Consequently, the Coast Guard, with EPA's concurrence, issued a waiver pursuant to section 312(c)(2) on November 28, 1977 (presented in full in Appendix D), which stated that if the owner of an existing vessel made a "firm commitment for the purchase and placement of" a Type I MSD prior to January 30, 1978, he then had until January 30, 1979 to install that device in an operable condition. If the conditions of the waiver were met, the owner would be considered in compliance with both the Coast Guard regulations and the EPA standards.

In addition, it became apparent that there were very few Type II MSD's available for small vessels. As a result, the Coast Guard issued a second waiver on July 10, 1978 (presented in full in Appendix D), also with the concurrance of EPA, which stated that the Type II MSD requirement for vessels 65 feet in length or less was being waived until adequate Type II MSD's become available for smaller vessels. Consequently, owners of existing vessels 65 feet in length or less were only required to install Type I MSD's by January 30, 1980. The current timetable, taking account of the provisions of the waivers, is presented in Figure 1.3.

FIGURE 1.3
COMPLIANCE DEADLINES FOR INSTALLATION OF
MDS's ABOARD WATERCRAFT

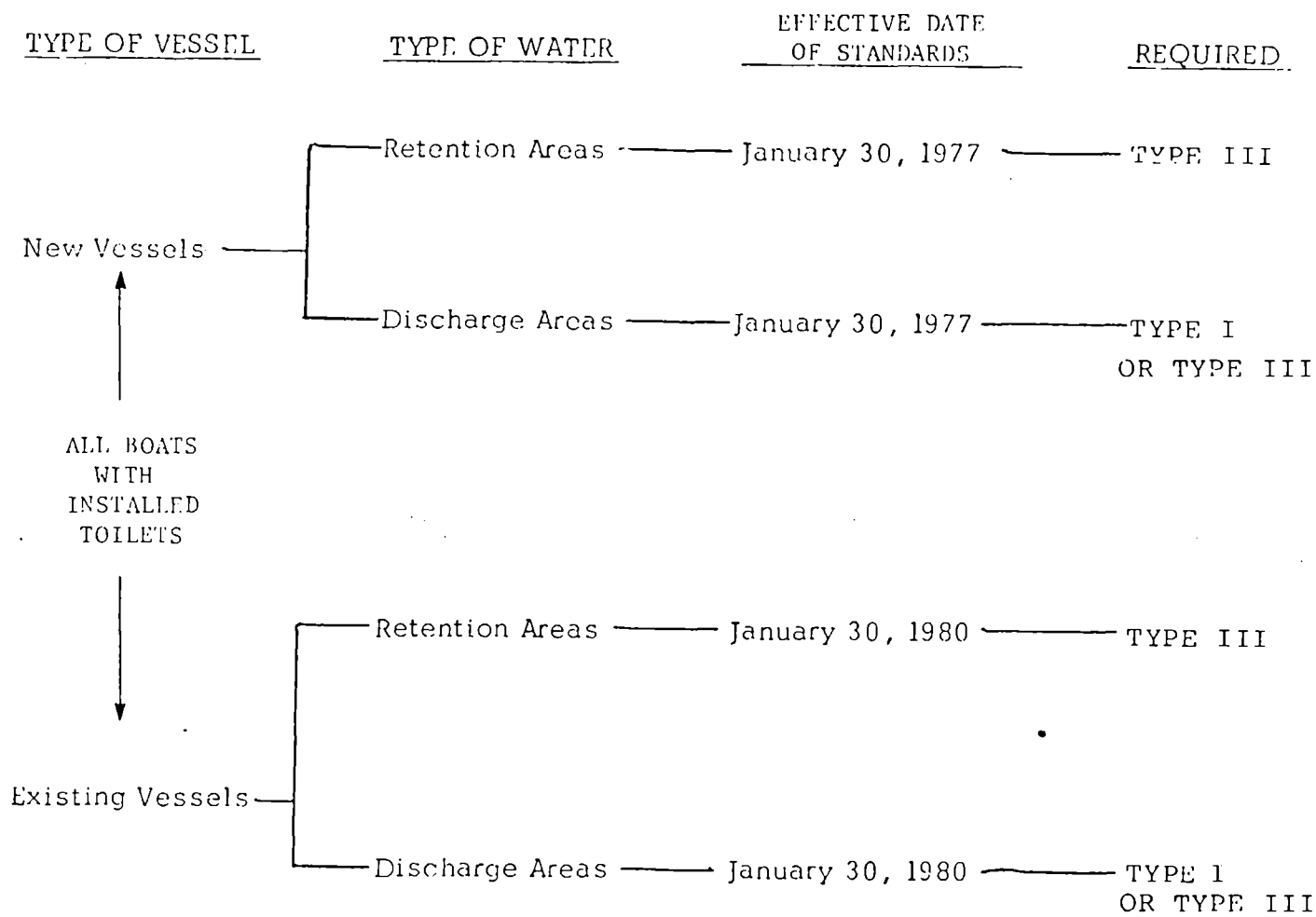

CHAPTER 2

SECONDARY DATA - TECHNICAL DISCUSSION OF MARINE SANITATION DEVICES (MSD's)

Intentionally Blank Page

2. SECONDARY DATA - TECHNICAL DISCUSSION OF MARINE SANITATION DEVICES (MSD's)

This chapter addresses the specific technical issues relative to the use of MSD's aboard recreational watercraft. Scientific and engineering data bases were reviewed to discover literature relative to the environmental effects of MSD's, engineering evaluations of MSD's, and a cost analysis of the implementation of MSD's. This chapter is divided into five sections discussing:

- research strategy;
- scientific issues;
- engineering analysis;
- cost analysis; and
- popular press reporting of the issues.

2.1 RESEARCH STRATEGY

The research strategy developed for this study was two-part, employing a computer search of bibliograhic data bases followed by library search activities. The objective of the search was to review all applicable data for the last 10 to 15 years, concentrating on the effects of sewage disposal from recreational vessels and the engineering and cost issues relative to mandatory use of MSD's.

2.1.1 Computer Search

Three computerized information systems were assessed for data on the scientific issues relative to MSD's. These were the Lockheed Information System, the SPC system, and the NIH Medlar system. In the Lockheed system, 13 data bases were searched covering more than 10,000 publications, which yielded 50 specific citations relative to the technical issues of MSD's. The SPC data base was judged to be redundant to the Lockheed system and, therefore, was not searched completely. The NIH Medlar system yielded one relevant citation on disease and pathogens resulting from recreational vessel discharge.

Figure 2.1 shows the computer search strategy used to query the Lockheed Information System. This search selected citations containing one or more of the terms in Statements 1, 2, or 7, or containing terms in both Statements 3 and 4.

Each citation was followed by a detailed abstract, highlighting the contents of the reference. By reviewing each abstract, a decision was made regarding the applicability of the reference to issues of concern. The output from the computer search led directly into the library search and the investigation of other information sources.

2.1.2 Library Search and Other Information Retrieval

The library search was first directed at obtaining and reviewing those articles selected from the computer search. Libraries that were used in this data-gathering effort were the EPA Headquarters Library and the Library of Congress. In addition, once an article was obtained, a review of the bibliography was done immediately to identify additional references applicable for the technical review. At the Library of Congress, a manual search of their holdings was performed in an attempt to exhaust all sources of information pertaining to MSD's, the effects of disinfectant chemicals on the aquatic environment and reports on disease from recreational watercraft discharge.

The search of computerized data bases and technical libraries indicated that technical literature directly applicable to recreational watercraft is relatively scarce. The limitations of the research reported in the literature will be discussed in the subsequent sections of this chapter.

The search for scientific and technical information in secondary sources was paralleled by an effort to contact individuals by telephone in the academic community and in government agencies who were thought to be active in research related to marine sanitation devices. Several relevant reports were identified through these direct inquiries. The discussions also served to provide deeper insights into methods used to establish a connection between the discharge of vessel wastes and contamination of the aquatic environment.

FIGURE 2.1
COMPUTER SEARCH STRATEGY

```
? .EXS 4SC7          0 MARINE SANITATION ACT
                     0 MARINE SANITATION DEVICES
            1      0  MARINE SANITATION ACT OR MARINE SANITATION DEVICES
                     5 MSD
                     0 M(W)S(W)D
                     7 MARINE(W)SANITATION
            2      9  MSD OR M(SW)S(W)D OR MARINE(W)SANITATION
                     4 WATERCRAFT
                    71 VESSEL?
                     9 PLEASURE(W)BOAT?
                     0 PLEASURE(W)CRAFT
            3     84  WATERCRAFT OR VESSEL? OR PLEASURE(W)BOAT? OR PLEASURE(W)CRAFT
T
                   127 SEWAGE
                    43 SANITATION
                    29 SANITARY
                    59 TOILET
                   368 WASTE(W)DISPOSAL
            4    585  SEWAGE OR SANITATION OR SANITARY OR TOILET OR WASTE(W)DISPOSAL
AL
            5      (Line Deleted)
            6      0  3 AND 4
                     0 MARINE(W)FECAL(W)COL?LFORM
                     0 DISEASE(W)TRANSMISSION(F)MARINE
            7      0  MARINE(W)FECAL(W)COL?LFORM OR DISEASE(W)TRANSMISSION(F)MARINE
E
            8      9  1 OR 2 OR 6 OR 7
```

2.2 SCIENTIFIC ISSUES

This section addresses environmental effects related to three major problems:

- sewage discharge to the aquatic environment;
- sewage-borne pathogens in the aquatic environment; and
- disinfectant chemicals discharged to the aquatic environment.

Each of these areas is discussed in terms of its general effects and specifically how each issue relates to recreational watercraft.

2.2.1 Sewage Discharge to the Aquatic Environment

Studies of the effects of sewage discharge on the aquatic environment from municipal sanitary sewers have been comprehensive and voluminous. These studies are not directly applicable to sewage discharge from watercraft, because wastes from municipal sanitary systems are more dilute and are in vastly greater quantities than those from watercraft. Typical concentration of biochemical oxygen demand (BOD) in wastewater from watercraft is between 1700 - 3500 mg/l, while typical sanitary wastewater ranges from 110 to 400 mg/l for raw sewage and five to 100 mg/l for treated sewage.[48] Raw municipal sewage has a lower strength because people on land use more water for sanitary purposes than do people on boats. In addition, the proportion of gray water (defined as water from baths, showers, kitchens, etc.) is greater in municipal sewage, and municipal collection systems are subject to inflow and infiltration of relatively unpolluted stormwater. While sewage from watercraft is more concentrated, the total volume of contaminated waste is small in comparison with sewage loads from stationary sources. In addition, boats are mobile sources and disperse their pollutant loads over a wide area. Municipal sanitary sewer wastes may be discharged at a steady rate over a long period of time, whereas watercraft wastes are frequently discharged intensively for short time periods, such as in a marina over a weekend.

The introduction of human wastes into a body of water increases the concentration of oxygen-demanding substances, which deplete the amount of oxygen available to aquatic species. In addition, nutrients in the sewage may increase the rate of eutrophication and could eventually result in a highly eutrophic body of water that is considered undesirable for human use or activity.

Human wastes contain a wide variety of bacteria, viruses, fungi and worms, some of which are pathogenic. Although most pathogens cannot grow in the environment and eventually die off, some, depending on the type of water and the prevailing condition, can survive long enough to constitute a health hazard. Those pathogens that form spores in their reproductive cycle can remain virulent for long periods of time; hence, sewage-contaminated lakes, rivers, and coastal regions may be a dangerous source of disease organisms.

2.2.1.1 Effects of Sewage from Recreational Watercraft

The effects of sewage discharge on the aquatic environment have been well documented in the literature. However, there is limited research that assesses the direct effects of sewage discharge from recreational watercraft on the incidence of waterborne disease and the degradation of the aquatic environment. That is, no studies were found that measured oxygen depletion, nutrient levels, or disease incidence, and correlated these results with the discharge of sewage from recreational watercraft. There are, however, numerous studies showing the effects of boats on increased levels of enteric bacteria, which can be considered as an indirect measure of the potential for waterborne disease (see below). Watercraft clustering in marinas or in coves or bays for several days have been shown to have noticable short-term effects on the number of enteric bacteria in the aquatic environment.

2.2.2 Microbial Contamination

The release of microorganisms to the aquatic environment has become a crucial issue in the discussion of the implementation of MSD's for recreational watercraft. Many advocates of overboard discharge contend that the scientific literature has not been conclusive in demonstrating that overboard discharge results in contamination by sewage-borne microorganisms and that there are subsequent health effects. As this section will show, however, there have been several studies in which the contribution of boats to increased microbial contamination is well-documented.

2.2.2.1 General Effects of Pathogens on Aquatic Environmental Quality

The most common pathogenic organisms found in domestic sewage are listed in Table 2.1. Many of these organisms die off rapidly when discharged into surface waters. However, various pathogens will survive if the conditions are right. The bacterial diseases and causative organisms that are known to be transmitted by contaminated water are typhoid fever (*Salmonella typhosa*), cholera (*Vibrio cholerae*), and bacterial dysentery (*Shigella dysenteriae*). The spores of pathogenic *Clostridia*, particularly of those causing gas gangrene such as *Cl. perfringeus*, *Cl. novyi*, and *Cl. septicum*, can be found in sewage-loaded waters. They may remain alive in the sediments for years and may even become enriched there.[4]

Pathogenic viruses are of particular concern with respect to sewage contaminated waters. The question as to whether chlorine and other disinfectants effectively inactivate viruses at commonly used dosages has not been definitively answered. From the evidence available on the viricidal effectiveness of the chlorination process, it appears that chlorination beyond the breakpoint to obtain free chlorine will be required to kill many viruses of concern.[4]

The viral diseases known to be transmitted by water are poliomyelitis, certain kinds of hepatitis, and intestinal infections (Coxsackie and Echo viruses). Infections from hepatitis viruses as well as *Salmonella* bacteria can also be contracted by ingesting oysters and other shellfish obtained from water contaminated by human wastes.[9]

The survival of pathogenic organisms in aquatic systems varies depending on the type of water and prevailing conditions. Temperature, salinity, tubidity (light penetration), availability of nutrients, grazing by zooplankton, and BOD concentration all appear to affect the survival of pathogenic organisms, particularly in seawater. Above 10 mg/l initial BOD, seawater appears not to be toxic to microorganisms and the maximum bacterial density becomes dependent on the initial BOD concentration.[4] Studies by Stewart *et al.* (1980) show that many of these pathogens will survive in marine sediments, particularly in areas of overlying waters polluted with sewage.[34] The pathogens that have primarily been identified are *Salmonella* and *Shigella*.

TABLE 2.1

Pathogenic organisms commonly found in wastewater

Organism	Disease	Remarks
Ascaris spp., *Enterobius* spp.	Nematode worms	Danger to man from wastewater effluents and dried sludge used as fertilizer
Bacillus anthracis	Anthrax	Found in wastewater. Spores are resistant to treatment
Brucella spp.	Brucellosis. Malta fever in man. Contagious abortion in sheep, goats, and cattle	Normally transmitted by infected milk or by contact. Wastewater is also suspected
Entamoeba histolytica	Dysentery	Spread by contaminated waters and sludge used as fertilizer. Common in hot climates
Mycobacterium tuberculosis	Tuberculosis	Isolated from wastewater and polluted streams. Wastewater is a possible mode of transmission. Care must be taken with wastewater and sludge from sanatoriums
Salmonella paratyphi	Paratyphoid fever	Common in wastewater and effluents in times of epidemics
Salmonella typhi	Typhoid fever	Common in wastewater and effluents in times of epidemics
Salmonella spp.	Food poisoning	Common in wastewater and effluents
Schistosoma spp.	Schistosomiasis	Probably killed by efficient wastewater treatment
Shigella spp.	Bacillary dysentery	Polluted waters are main source of infection
Taenia spp.	Tapeworms	Eggs very resistant, present in wastewater sludge and wastewater effluents. Danger to cattle on land irrigated or land manured with sludge
Vibrio cholerae	Cholera	Transmitted by wastewater and polluted waters
Virus	Poliomyelitis, hepatitis	Exact mode of transmission not yet known. Found in effluents from biological wastewater-treatment plants

Source: Metcalf & Eddy, Inc., Wastewater Engineering, 2nd Edition, New York, NY, 1979, p. 107.

Pathogenic organisms generally have a short lifetime in the environment. Therefore, some other indicator of contamination must be used. Coliform bacteria, because of their universal presence in the human intestinal tract and because they are easily identified and counted, are commonly used as an index of fecal contamination. However, coliform bacteria can originate from the intestintes of other animals, and thus the presence of fecal coliforms cannot be completely relied upon as an indicator of contamination by human wastes.

It should be noted that some recent studies have indicated that the fecal coliform assay is not a good indicator of the degree of recent fecal pollution, particularly in seawater.[4] Rather, the suggestion has been given that fecal streptococci be used as an indication of fecal pollution. While this argument may be correct, the fact remains that most studies have been performed by using the fecal coliform assay as an indicator of contamination by sewage.

2.2.2.2 The Contribution of Recreational Watercraft in Fecal Coliform Assays

Kelch and Lee (1978)[20] developed a predictive model for coliform in estuarine environments. The parameters used in the model were environmental factors (temperature, precipitation, river flow, and tide information), bacteriological data, antibiotic resistance factors for the bacteria that were isolated, and recreational use data. In the situations tested thus far, the model clearly related bacterial increase with recreational activity. In addition, other studies have been performed on bacteriological contamination from small boat wastes; some studies have been less than conclusive, while other have clearly demonstrated coliform increases. Some of these studies are highlighted below:

- Seabloom (1969)[32] notes that coliform counts will naturally decrease during summer months versus winter months because of their dependence on temperature. This decrease has been a predictable percentage of the total coliform count. However, in his study of two freshwater bays that are used for recreational boating during the summer, the author noticed that the decrease in coliform counts was considerably less than anticipated, leading him to conclude that boating activity has affected the total coliform concentration in the waters.

- Kidd (1975)[21] reported an increase of both fecal streptococci and fecal coliform in man-impacted areas of Lake Powell. These finds occurred during the summer months during increased human activity.

- Mack et al. (1971)[23] in a study of a small Michigan lake, compared the water of a marina prior to use and just after use on a major boating weekend. Significant increases of fecal coliform were found in the marina slips that were used most often. The study showed temperature and wave action had a great influence on the survival ability of the coliforms.

- The Rhode Island Water Quality Plan (1978)[30] reported many cases of increase of total and fecal coliform counts in shellfish beds that lay below major boating areas. For instance, after Labor Day weekend, increases that were directly proportional to the boating population were noted both in the water column and in the shellfish.

- Barbaro et al. (1969)[2] sampled marina and non-marina waters during the summer boating season on a Mississippi reservoir. Marina waters were found to contain significantly higher fecal coliform and fecal streptococci counts than non-marina waters.

- Faust (1979)[15] conducted a limited study of bacterial pollution from recreational watercraft in a Chesapeake Bay inlet. Fecal coliform data were taken over a weekend in which there was no runoff from other sources of contamination. The concentration of fecal coliforms was observed to rise during the weekend in direct relationship to the number of pleasure boats counted and fall again on Monday after the boating population had left the area.

- The Environmental Health Administration of the State of Maryland Department of Health and Mental Hygiene performed a two year comparative study (1979)[17] of sewage contamination in six marinas in Kent Island Narrows, Maryland. In this study bacterial assays for fecal coliform were carried out on samples taken in marinas and compared with samples from areas that would not be contaminated by sewage from pleasure boats. Based on a statistical analysis of the two years of data it was concluded that the fecal coliform concentration was significantly higher in marinas that were populated by recreational watercraft than the control areas. The marinas in the Kent Island Narrows were therefore identified as "significant contributors toward bacterial loading in surface waters."

The above literature is not totally conclusive regarding the extent of the relationship between pleasure boats and microbial concentration in water. However, because several of the studies support one another, and because increased discharge of sewage must result in increased bacterial contamination, it may be said that a direct relationship exists between pleasure boats and bacterial counts.

However, the data do not indicate an increased incidence of disease. Some studies may have yielded conflicting results because of the many variables that influence coliform survival. But it may be concluded that there is an increase in pathogens in underlying waters due to recreational watercraft usage.

2.2.3 Disinfectant Chemicals in the Aquatic Environment

Like nearly all shorebound sewage treatment systems, Type I marine sanitation devices employ the use of disinfectant chemicals (chlorine or formaldehyde solutions) in their treatment process. These chemicals are mixed with the waste; some of the chemical is consumed by the treatment process and the residual is then discharged into the aquatic environment with the treated waste. The main purpose is to reduce the amount of virulent pathogens discharged into waterways. Disinfectants, especially chlorine, may also be used to control odors. However, there is a concern that the effects of the disinfectant chemicals on the aquatic environment could be detrimental.[1, 12] This section addresses the general issues pertaining to the effects of disinfectant chemicals and the specific effects from recreational watercraft. Much data is available in the scientific literature on the effects of chlorination; however, there is little information on the effects of other disinfectant compounds, or the direct effects from recreational watercraft.

2.2.3.1 General Discussion on the Effects of Disinfectant Chemicals

Considerable work has been done on the effects of disinfectants on aquatic environment. Many of these studies have been related to power plant cooling water effluent where disinfectants (biocides) are commonly used as anti-fouling agents.[18] Some studies have been done with wastewater discharge from wastewater treatment facilities; these studies are the focus of this

analysis. The literature has largely focused on the effects of chlorine compounds.

In general, the toxicity of chlorine compounds is a function of concentration, contact time, and chemical form. These relationships are used frequently in the design of chlorination systems for treatment of water and wastewater. Figure 2.2 shows the relationship between time and concentration that will produce satisfactory kill rates for several pathogens and bacteria. Figure 2.3 indicates how these relationships are a function of the chemical form of the chlorine residual.

Studies on chlorine residuals in the aquatic environment have established similar curves for some macroscopic species and have extended these curves to considerably lower levels. In fact, it has been shown that threshold exposures exist that do not result in death in aquatic species. There are, however, observable chronic effects below these threshold values. Such effects may include avoidance of contaminated areas by certain species, interference with food or mate-locating mechanisms, and decreased reproduction rates. Figure 2.4 shows generalized curves that describe the acute and chronic effects of chlorine residuals to many aquatic species in fresh and marine environments.

Other toxicological studies reviewed are:

- Galtsoff (1945)[16] reported that oysters are sensitive to free chlorine in sea water at concentrations as low as 0.01 ppm. The oysters were found to be affected in their abductor muscles and in their ability to operate their pumping mechanism properly;
- Zillich (1972)[37] reported that chloramines were more toxic than free chlorine to warm water fish. Adult fish were killed at 0.4 mg/l, while 0.05 mg/l will kill trout fry;
- Stone, et al. (1973)[35] notes in his study of phytoplankton and aufwuchs (marsh periphyton) that toxic responses occurred at 0.06 mg/l in chlorinated effluents, with 50% of the phytoplankton and 30% of the aufwuchs; and
- Davis, et al. (1977)[11] reported on the decrease of fish species in certain parts of the Patuxent River where chlorinated sewage effluent occurred. He noted that, in addition to killing certain fish species, it also prevented migration of other species upstream.

These studies are representative examples of chlorine toxicity and depict the problems associated with chlorine.

FIGURE 2.2
CONCENTRATION OF CHLORINE AS HOCl REQUIRED FOR 99 PERCENT KILL OF E. COLI AND THREE ENTERIC VIRUSES AT 0 TO 6°C

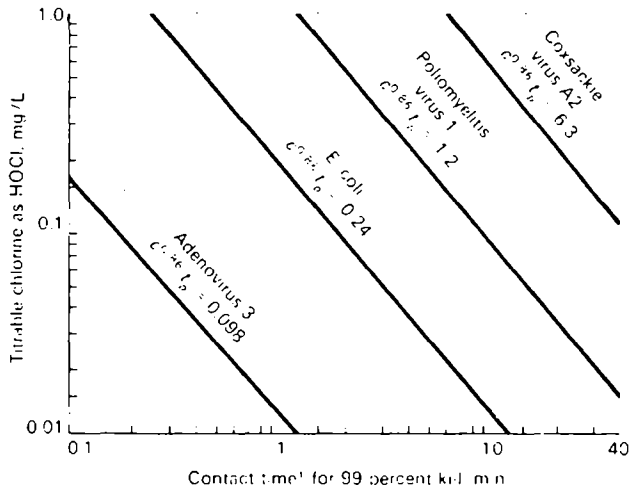

Source: Bery, G., "The Virus Hazard in Water Supplies." Reported in: Metcalf & Eddy, Inc., Wastewater Engineering, 2nd Edition, McGraw-Hill, Inc., New York, NY, 1979, p. 302

FIGURE 2.3
COMPARISON OF THE GERMICIDAL EFFICIENCY OF HYPOCHLOROUS ACID, HYPOCHLORITE ION, AND MONOCHLORAMINE FOR 99 PERCENT DESTRUCTION OF E. COLI AT 2 TO 6°C

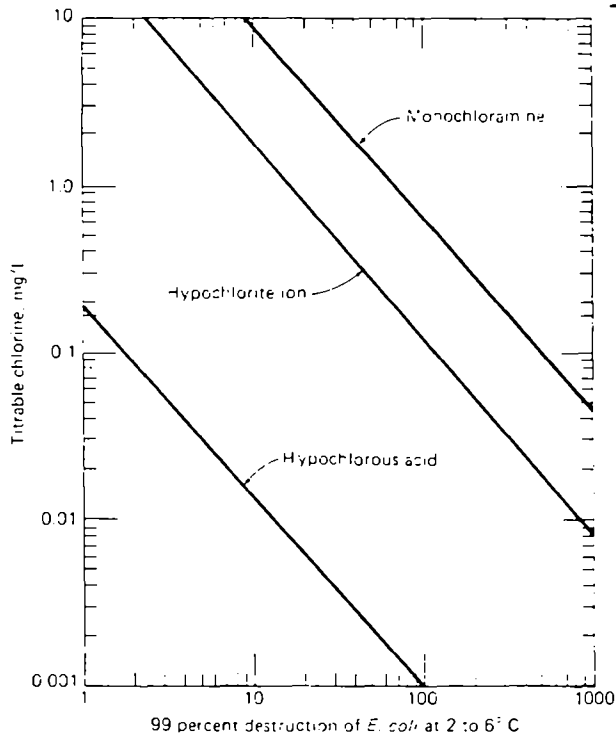

Source: White, G.C., Handbook of Chlorination. Reported in: Metcalf & Eddy, Inc., Wastewater Engineering, 2nd Edition, McGraw-Hill, Inc., New York, NY, 1979, p. 300.

Note: mg/L = g/m^3

FIGURE 2.4
ACUTE AND CHRONIC TOXICITY THRESHOLD FOR MARINE AND FRESHWATER ORGANISMS
EXPOSED TO CHLORINE

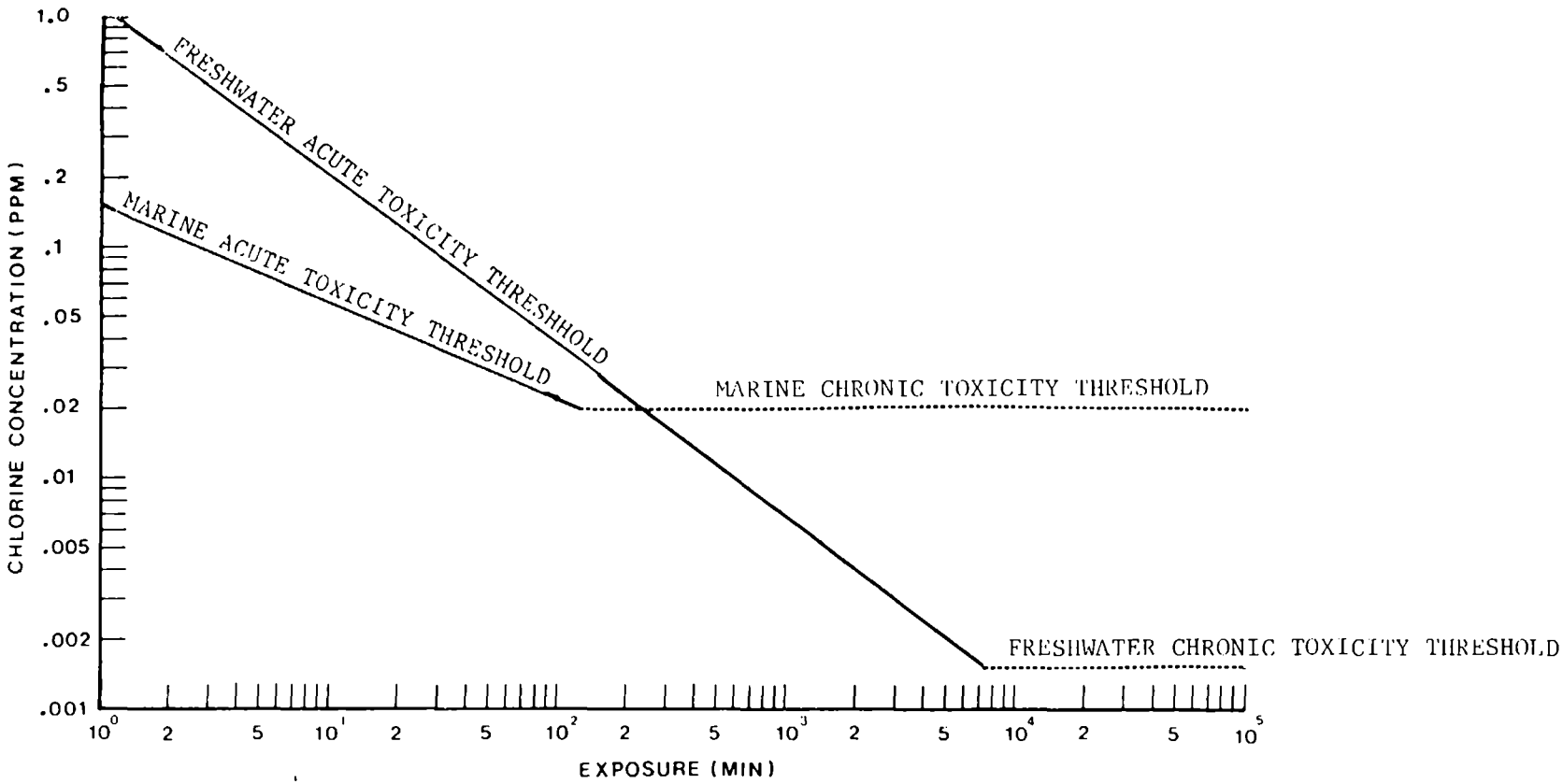

Source: Mattice, J.S., and Zittel, H.E., "Site Specific Evaluation of Power Plant Chlorination," Journal of Water Pollution Control Federation, Vol. 48, 1976, pp. 2284-2302.

Other factors that must be considered in an examination of the effects of chlorination are:

- The toxicity of chlorine in water depends on the amount of unconsumed chlorine residual remaining in solution, and not the amount of chlorine added (Brungs, 1973).[5]

- The toxicity of residual chlorine depends on the relative proportions of free chlorine and chloramines of which it is composed. This ratio also depends on the amount of ammonia in the water, pH, temperature and length of time of the reaction.

The variables all play a role in understanding why incidences of aquatic toxicity are not reported. Zillich[37] indicates that residual chlorine is not toxic for short periods of time, that if a fish is exposed it will attempt to travel out of the contaminated area and avoid the chlorination. He also states that fish are known to avoid toxic materials at concentrations well below those required to show toxic symptoms.

Another issue that has been raised recently in the literature is the formation of chlorinated organic compounds following the discharge of chlorinated wastewater into both saline and freshwater receiving bodies. Figure 2.5 is a model of how this process is thought to occur.

FIGURE 2.5
DEGRADATION PROCESS FOR CHLORINE IN SALINE WATER

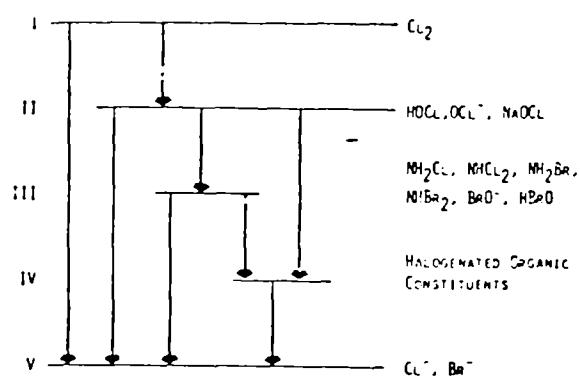

Source: Modified from Block, R.M., and Helz, G.R., "Biological and Chemical Implications of Chlorine in Estuarine and Marine Systems." Reported in: Davis, W.P., and Middaugh, D.P., "Impact of Chlorination Processes on Marine Ecosystems," Conference on Estuarine Pollution Control, 1977.

In Figure 2.5 the reaction between I and II is the result of chlorine decay from a diatomic gas. The products formed from II to III are a function of physical and chemical parameters of the water (pH, ammonia, bromine, temperature). Level IV includes the halogenated organics that could be formed by II or III species including chloramines, bromines, and hypobromite. This reaction sequence only occurs in waters rich in organic compounds.

Formaldehyde is another disinfection agent in common use in MSD's. The disinfecting power of formaldehyde comes from its ability to react with proteins by alkylation of certain active groups. This effectively denatures the protein by altering its chemical structure.[19] This process is concentration dependent. Laboratory formaldehyde solutions range from 37-40% and are known as formalin solutions. However, disinfecting solutions are effective at only a few percent. In concentrations of a few ppm in aquatic environments, formaldehyde has been shown to display no toxic effects. This formaldehyde was used as a disinfectant in boat toilets.[48]

Formaldehyde breaks down rapidly by oxidation to formic acid. In a reducing environment, methyl alcohol is formed (also biodegradable). Ultimately, these compounds break down to CO_2 and water vapor. Furthermore, formaldehyde is photo-sensitive, facilitating degradation in surface waters. In the relatively oxidative environment of fully aerated water, physical and biological processes will cause formaldehyde to break down by the formic acid route. However, the presence of sewage will consume oxygen, producing a more chemically reducing environment in which both physical and biological processes will favor the alcohol route. Sewage will also increase suspended solids, which will slow the photo-degradation process.

Formaldehyde is considered a toxic substance, and may be carcinogenic in rats by inhalation of high vapor concentrations. Degradation rates for formaldehyde in the environment are not generally known. However, it is completely miscible in water and readily degradable. EPA has estimated that because of the degradability, the potential for bioaccumulation of formaldehyde is low, as is the potential for contamination of sediments.[52] Formaldehyde's decomposition products are quickly converted to non-toxic substances through oxidation, evaporation, biodegradation and photodegradation. Because formaldehyde is discharged in small amounts from the MSD's that employ it as a disinfectant, and because of its very low

persistence in the aquatic environment, the environmental and human health hazard due to formaldehyde is judged to be negligible.[126]

Zinc salts are frequently used as bacteriostatic agents in Type III recirculating systems. Zinc has been reported to be lethal in fish in ranges from 0.1 to 1.0 mg/l; this toxicity is due to its forming of insoluble compounds on the gills. Zinc sulfate has also been found to be lethal to many aquatic plants. Zinc is a metal that will bioaccumulate. However, zinc is generally only used in Type III systems that should not be discharged overboard, except beyond the three-mile limit.

2.2.3.2 Effect of Disinfectant Discharge from Watercraft

No studies have been found in the scientific literature that discuss the effects of disinfectant discharge via Type I MSD's into the environment. Having looked at the aquatic toxicities of the two main chemicals used, there is little reason to believe that the effects of these chemicals would vary when these chemicals are used in an MSD. The effects from disinfection are not anticipated to be reduced in the MSD system.

Of the two major disinfectant chemicals used in Type I MSD's -- chlorine and formaldehyde -- only chlorine has been shown to be toxic in the aquatic environment. A direct link between MSD disinfectants and effects on the environment has not been documented.

2.3 ENGINEERING STATE OF THE ART

The literature retrieved consists of discussions of recreational vessel MSD's by system types rather than unit-by-unit analysis. This section reviews the general physical considerations that bear upon the selection, installation, and operation of MSD's by recreational vessel owners. Table 2.2 lists capacity, power demand, and chemical requirements of some currently certified equipment. Appendix B presents a section from a U.S. Coast Guard report that explains the operation of the three types of MSD's.

2.3.1 Physical Constraints on MSD's

The physical limitations of recreational watercraft impose constraints on the design, installation, and operation of marine sanitation devices, and must

TABLE 2.2

CERTIFIED MARINE SANITATION DEVICES SUITABLE FOR USE ON SMALL VESSELS

The MSD's listed are the ones that may be labeled under the regulations, but they should not be considered the only ones approved by the Coast Guard.

Manufacturer	Model	Type	Capacity	Chemical Charge	Current Draw (12v)
Marland Environmental Sys. 227 N. Main Street Walworth, WI. 53184	Sani-Head conversion module	III	50 flushes	deodorant	--
Danforth 500 Riverside Industrial Parkway Portland, ME 04103	D-1000EP D-1000RP	I I	unlimited unlimited	chlorine-base tablets	1.405 amp-hrs per flush
Firestone Coated Fabrics Company Box 887 Magnolia, AR 71753	Flex-N-fit tanks	III III III III	15 gals 30 gals 40 gals 100 gals	deodorant deodorant deodorant deodorant	-- -- -- --
Galley Maid Marine Products, Inc. Box 10417 Riviera Beach, FL 33404	Delta Marine Central Sys.	I	330 gals/day	chlorine pellets	45 amps 10 sec. flush
	Delta Marine Indiv. Sys.	I	1-4 people	chlorine pellets	45 amps per flush
Humphrey Marine Sewage Systems, Inc. Box 341 Del Mar, CA 92014	Model 10	II	1-5 people	chlorine pellets	10 amps per flush
Mansfield Sanitary, Inc. 201 Wayne Street Big Prairie, OH 44611	TDX-E	I	unlimited	Formalin solution	8 amps per 25-40 flushes
	TDX-N	I	unlimited	Formalin solution	
	911-M28	III	9 gals	deodorant	--
	Series 4000 Holding Tanks	III III III III III III	15 gals rigid 16 gals rigid 20 gals rigid 30 gals rigid 40 gals rigid 55 gals rigid	deodorant deodorant deodorant deodorant deodorant deodorant	
[*When used in holding tank or TDX.]	*Vacu-Flush 800 Series	III	unlimited		2-6 amps per flush
Microphor, Inc. P. O. Box 490 Willits, CA 95490	M-8 M-10 M-12 M-14	II II II II	2 people 3 people 3 people 4 people	chlorine tablets chlorine tablets	
Monogram Industries, Inc. 4030 Freeman Blvd. Redondo Beach, CA 90278	Handihead	III	3 gals = 40 flushes	deodorant	
Raritan Engineering Co. 1025 N. High Street Millville, NJ 08332	Lectra San	I	unlimited	hypochlorous acid	1.5 amp hrs per flush
	CHT tank	III	5 gals		
	PHT-15	III	15 gal flex.	deodorant	
	PHT-30	III	30 gal flex.	deodorant	
Thetford Corp. Box 1285 Ann Arbor, MI 48106	SeaFarer	III	4 gals	deodorant	
	Electra Magic	III	7 gals	deodorant	5 amps per flush
Wilcox-Crittenden Div. Gulf & Western Mfg. Co. 699 Middle Street Middletown, CT 06457	6021	III	15 gal flex.		
	6022	III	30 gal flex.		
	6012	III	10 gal rigid	deodorant	
	6013	III	17 gal rigid	deodorant	
	6014	III	25 gal rigid		

Source: "Guide to Marine Sanitation Devices," Boating, October, 1979.

be considered by vessel owners, operators, and manufacturers. The principal considerations are the space, weight, and power requirements of the MSD.

2.3.1.1 Space

Available space on some recreational watercraft is limited. Space constraints are most severe on sailing craft and small powerboats; any space occupied by an MSD may reduce availabile storage area. While some vessels have a limited amount of unused space in the bilge, installation of MSD equipment in this area could limit accessibility of the equipment for routine maintenance or repair.

2.3.1.2 Weight

Additional weight added to any vessel will reduce total buoyancy and affect the vessel's center of moment. Reduced buoyancy would decrease the carrying capacity of the vessel, thereby reducing the amount of fuel or equipment or the number of people that the vessel can carry. Shifting the center of moment may alter the ability of the vessel to right itself during roll. Additional weight also results in decreased maneuverability. In the case of MSD's equipped with holding tanks, the increase in weight as the tank fills must also be considered; a full holding tank with a twenty-gallon capacity would add as much weight to the vessel as would an additional adult passenger.

2.3.1.3 Power Requirements

Electrical power available on recreational vessels is most commonly provided by storage batteries that are kept charged by main engine generators or alternators. This power is used to operate lights, pumps, electronic gear, and accessories. Vessels equipped with refrigerators, electric stoves, space heating, or air conditioning units usually provide AC power to this equipment by means of separate generators driven by the main engine. Larger vessels are sometimes equipped with marine generators, driven by auxiliary gasoline or diesel engines.

Most electrically-driven MSD's are designed to operate on 12 volt direct current supplied by storage batteries, although other power options are available. Operation of these units will reduce power available to operate other equipment. MSD's with high current demands may require that a vessel

owner install additional power sources -- either storage batteries or generating equipment -- and result in additional expense.

2.3.1.4 Additional Physical Considerations

In addition to the principal factors of space, weight and power demand, the following are also important considerations in assessing the capability and suitability of an MSD:

- Ease of maintenance - Can the MSD be properly installed, maintained, and repaired?
- Safety - Does the installed unit interfere with movement or operating requirements of crew or passengers?
- Motion - Will the MSD, as installed, operate properly under conditions of roll, pitch, and yaw?
- Supplies - Does the MSD require storage of dry or liquid chemical supplies?

The U.S. Coast Guard takes these additional design factors into account in the MSD certification process.

2.3.2 Performance Data

No source of performance data, other than manufacturers' claims, has been identified. MSD units with U.S. Coast Guard certification meet the criteria established for such certification; this is, however, a certification of design and not a guarantee of long-term operating performance.

While no scientific MSD performance data are available, some qualitative information is presented in Tables 2.2 and 2.3. Table 2.2 is an evaluation of commercially available MSD's prepared by the U.S. Coast Guard and included in Recreational Vessel Waste Pollution, U.S. Coast Guard, June 1974. Table 2.3 presents the results of a survey conducted by Cruising World and published by that magazine in October 1979. This survey of its readers (primarily subscribing yacht owners) resulted in 242 responses. In addition to the standard questionnaire, space was provided for individual comment on MSD's; these results are summarized in the table and discussed in Section 2.5.2.

TABLE 2.3

Results of Cruising World's MSD Survey

QUESTIONS		ATLANTIC SEABOARD		GREAT LAKES & INLAND WATERS OF THE MIDWEST		PACIFIC SEABOARD		RESULTS	
		Under 30'	Over 30'	Under 30'	Over 30'	Under 30'	Over 30'	Totals	%
Do you sail	offshore?	36	56	4	6	13	34	149	61%
	inland waters?	47	56	7	12	17	19	158	65%
	enclosed waters?	21	20	3	5	11	8	68	28%
What type of MSD do you have?	Type I	4	15	–	1	4	8	32	13%
	Type II	–	3	–	1	2	1	7	3%
	Type III	16	27	8	16	9	14	90	37%
	flush-thru	38	29	2	3	10	9	91	38%
	portable	3	6	2	1	1	3	16	7%
Has your MSD been satisfactory?	Yes	24	18	6	8	18	19	93	58%
	No	18	20	5	11	5	7	66	42%
If you own Type I, have you had service or maintenance problems?	Yes	5	10	–	–	–	3	18	45%
	No	2	7	1	2	4	6	22	55%
If Type III, are pump-out facilities	available?	3	5	4	6	3	5	26	21%
	not available?	16	23	–	1	7	6	53	43%
	available with difficulty?	6	10	6	8	4	11	45	36%
Does your type emit a bad odor?	Yes I	2	7	–	1	1	1	12	31%
	Yes II	1	–	–	–	1	–	2	40%
	Yes III	15	17	5	15	3	9	64	73%
	No I	5	13	–	1	1	7	27	69%
	No II	–	3	–	–	–	–	3	60%
	No III	2	9	3	1	4	5	24	27%
Do you have a Y-valve for direct overboard discharge?	Yes	15	31	3	5	5	13	72	49%
	No	13	21	5	11	10	14	74	51%
While cruising what percent of the time do you use shore facilities instead of your onboard head?	20%	28	63	2	10	13	14	130	53%
	40%	9	11	2	1	2	6	31	13%
	60%	13	8	–	3	1	8	33	14%
	80%	6	4	2	5	3	6	26	11%
	100%	3	6	5	1	2	5	22	9%
If you haven't yet installed an approved MSD do you plan to buy	Type I?	9	21	–	1	–	7	38	49%
	Type II?	1	5	–	1	–	4	11	14%
	Type III?	8	7	2	–	9	3	29	37%
Do you think the discharge from pleasure boats' heads makes a significant contribution to the pollution of our waters?	Yes	6	11	4	4	3	7	35	15%
	No	55	67	7	15	23	33	200	85%
How do you rate available MSD technology?	Excellent	1	2	–	–	–	2	5	2%
	Adequate	9	12	3	3	5	8	40	16%
	Less than adequate	31	49	6	9	15	22	132	55%
	Inoperable	15	27	2	8	6	7	65	27%
How do you rate government efforts to handle pollution attributable to small boat owners?	Excellent	–	1	–	–	–	1	2	1%
	Good	–	1	1	1	–	2	5	2%
	Fair	13	7	4	2	6	8	40	17%
	Bad	43	83	6	16	19	28	195	80%
Are you concerned about pollution?	Yes	54	67	11	16	19	28	195	90%
	No	4	10	–	–	5	3	22	10%
How would you describe the cruising person's role in relation to the government regulations & the MSD industry?	Willing partner	2	4	–	1	2	2	11	4%
	Legal partner	1	6	1	1	1	5	15	6%
	Guinea pig	19	22	6	4	10	9	70	29%
	Victim	46	67	5	16	16	27	177	73%

Source: Day, G., and Brennan, B., "Readers Speak Out on MSDs", Cruising World, October, 1979, p. 133.

2.4 COST CONSIDERATIONS

Costs associated with existing, proposed, and future regulations are receiving increasing public attention. While the nature of these concerns is rather easy to discern, it is generally difficult to adequately address cost considerations associated with any particular regulation. It is especially difficult with respect to MSD regulations within the resource constraints of this study. Reliable major cost parameter information (e.g., percentage of current pleasure boating vessels in compliance with existing Federal regulations) does not appear to be available from secondary sources; primary data collection for this variable would require far more resources than are available for this project.*

As a positive means of approaching cost concerns, we have set out the major cost parameters for which data adequate for policy purposes could be located or inferred, and combined these numbers in various ways to estimate regulatory costs associated with MSD's. The computations focus on costs (in 1981 dollars) that would have been incurred by boat owners if 100% compliance had been achieved during the 1977 to 1979 period with respect to current regulations and a set of possible policy options. Possible associated Federal, State, and local government costs, such as enforcement, are not addressed. This is due to both the lack of resources and the ability to make a reasonable assumption that an enforcement program can be designed and run to at least break even monetarily.

It is stressed that figures presented are policy (order of magnitude) estimates only, and not based on data generated by highly refined accounting techniques and/or statistically reliable surveys. For this reason, range

* Some knowledgeable individuals place current (1981) boater compliance with MSD regulations at about 25%. The Oregon study discussed in Appendix C contains a 65% compliance rate estimate. Data on 1976 compliance rates also presented in Appendix C suggest an average compliance rate of 50% at that time.

estimates of the more relevant parameters are presented. Range estimates (high and low values) reflect the fact that at least two statistics fundamental to the analysis could not be determined with satisfactory precision. These are: (1) installed-to-portable toilet conversion rates; and (2) compliance rates. The belief exists that boaters dislike MSD's to the point that dealers actually pull out manufacturer-installed devices on new boats prior to delivery and add portable toilet facilities. Resources did not permit tracking down reports such as these, which seem to defy conventional business logic, i.e., if neither dealers nor boaters want permanent toilets, why do manufacturers install them? Boaters are also reported to be substituting portable toilets for installed devices on old boats. The low estimates presented in the following pages allow for this phenomenon, i.e., they assume an 80% conversion rate for the 16′ - 26′ Class I boats and a 20% conversion rate for the 26′ - 40′ Class II boats. The high estimates assume that no conversion occurs.

Neither the high nor the low estimates presented reflect sensitivity of the estimates to the rate of compliance with Federal regulations in January 1977 as a result of State laws that predate the Federal regulations. Instead, estimates presented in some cases have utilized an average 1976 complaince rate of just under 50%. As is discussed at the end of Appendix C, adequate allowance for both factors (conversion and compliance rates) results in an estimate of the number of boats affected by Federal regulations over the 1977 to 1979 period in the range of 200,000 to 500,000 with the most likely number being 350,000. In order to adjust range estimates presented in the following tables toward most likely point estimates one may multiply the lower bounds by 1.94 or divide the upper bounds by 1.35. Note, however, that not all figures presented in this section are impacted by the imprecision in conversion and 1976 compliance rates: only those with two values in a single cell of a table are impacted.

In terms of an overall conclusion, data presented elsewhere in this report suggest that Type III devices are the most effective from a standpoint of

aquatic impact and human health. Data presented below suggest that Type III devices would have been the least costly during the 1976 to 1979 period. One may draw the conclusion that Type III devices are likely to have been the most cost-effective available for the 1976 to 1979 period. However, boater resistance to Type III devices is high and collection of substantial additional data would be necessary to prove this conclusion of historic cost effectiveness. Additionally, it is of questionable value for determining a future policy change. The numbers set out below can be employed to estimate these future costs, given additional information on specific alternative policies to be analyzed and assumptions deemed to be reasonable, e.g., inflation and current compliance rates. More information on sources of data and methods of computation is presented in Appendix C.

2.4.1 Cost Parameters

Major cost parameters include type of device, investment, operation, maintenance, size of boat, effective date of regulations, and number of boats with toilets. Each of these parameters is discussed below and related data are presented. In subsequent sections, these numbers are combined in various ways to estimate total compliance costs.

2.4.1.1 Type I and III* Devices Only

Only Type I and III MSD's are considered. The major reasons for not considering the Type II MSD's are the following:

- The Type I and II devices are perfectly substitutable under the present regulations and,
- Very few Type II devices are presently available on the market for smaller boats. They are generally more expensive than Type I devices and require more maintenance. This makes them less popular and less suitable for occasionally used pleasure boats.

*Unless otherwise stated, as used in Section 2.4, Type III device refers only to holding tanks.

2.4.1.2 Investment, Operation and Maintenance

The estimated investment and annual variable costs for the two kinds of treatment technologies are summarized by different boat size classifications in Table 2.4. The investment cost is the installed cost of the specific device including purchase price and installation charges (i.e., costs for labor and materials), but exclude cost of the toilet itself. The annual variable costs to operate and maintain the treatment device are presented in a separate column. These costs include such items as chemicals to treat the waste, electricity to macerate it, and pumpout charges. In a free market economy pumpout charges (prices) can be presumed to cover all associated pumpout facility costs, e.g., of the service provided and including original investment, interest, maintenance, disposal and profit. Note that total annualized costs have not been specified. Such costs may be useful for some analyses but require a number of assumptions with respect to factors such as interest rate, tax rate, and rate of decline in useful life. Similar assumptions are required for life-cycle cost analysis.

Note also from Table 2.4 that the costlier of the two technologies is the Type I device. The Type I technology adds about $1000 (1.5%) to the average price of a boat while Type III technology only adds about $350 (.5%). To offset this initial cost saving ($650) with reduced operating and maintenance costs ($25) would require 26 years (650 ÷ 25), assuming no capital cost, and it is unlikely that either device would last this long.

It has been suggested that the comparison of a pleasure craft to a second home or summer residence is useful. In this regard, a waste treatment system for a summer residence (septic tank and leaching field) costs upward of $2,000. This is twice as much as a Type I MSD for a pleasure craft.

2.4.1.3 Size of Boat

Table 2.4 also shows the relationship between boat length, boat price and device cost. The major differences in device investment, maintenance and operating costs arise from the need for more capacity (to handle a larger number of people) as boat size increases.

TABLE 2.4

ESTIMATED INVESTMENT, OPERATION AND MAINTENANCE COSTS

BY BOAT SIZE

(CURRENT DOLLARS)

Boat Size Class	Average Price Per Boat[1]	TYPE I		TYPE III[4]	
		Investment Cost[2]	Operation and Maintenance[3]	Investment Cost[2]	Operation and Maintenance[3]
16' - 26' (I)	16,000	800	8	250	34
26' - 40' (II)	36,000	800	12	250	36
40' - 65' (III)	150,000	1400	33	550	60
Unweighted Average Cost Per Boat	67,000	1000	18	350	43

[1] Based on an analysis of the average selling price of boats of various sizes in the Yachting/Boating, Boat Owners Guide, 1981.

[2] Based on average costs of marine sanitation devices at local marinas in the Washington, D.C. area (exclusive of toilet cost - See Appendix C for details).

[3] See Appendix C for details.

[4] Specifically, cost figures are for a holding tank, not other Type III devices, which are substantially more expensive.

2.4.1.4 Effective Date of Regulations

Existing Coast Guard regulations were promulgated in 1975 and distinguish between "new" and "existing" boats relative to that date. The compliance schedule requires all boats manufactured after January 30, 1975 to comply with Federal regulations as of that date. Boats existing prior to January 30, 1975 must have been brought into compliance by January 30, 1980. Therefore, to calculate the net cost of total compliance with Federal regulations requires determination of the number of boats manufactured prior to January 30, 1977, and not in compliance prior to that date, as well as all boats manufactured after that date. Boats manufactured prior to January 30, 1977, the date on which the Federal standards took effect, and which were already in compliance on that date are not relevant to most analyses because it can be presumed that factors other than Federal regulations (e.g., State regulations) were the cause of compliance. Therefore, this analysis only considers boats manufactured prior to January 30, 1977, which were not in compliance on that date, and boats manufactured after that date.

2.4.1.5 Boats with Permanently Installed Toilets

The population of interest is further narrowed by specification in the Federal regulations that only boats with installed toilets are covered by the regulations. Table 2.5 presents estimates on the number of boats by size class for the groups of boats that are affected by current Federal regulations. The estimated number of boats with installed toilets are in the range of 200 to 500 thousand boats depending on the assumptions that are made in the analysis as discussed above and in Appendix C.

2.4.1.6 Portable Toilets

The boat owner faced with compliance has the option to purchase a portable toilet to replace his permanently installed tiolet. The cost differential is heavily in favor of this option, and so it is assumed that a significant proportion of boat owners, especially in the smaller size classifications, may choose to comply in this manner. This further reduces the number of boats with installed facilities. As discussed above, a marine sanitation device manufacturer estimates that 80% of boats in Class I and 20% of boats in Class II will comply in this way. These factors have been applied to generate the low estimates, while the high estimates make no allowance for conversion. Note that the low cost estimates do not include approximately $100 per boat required to make an

TABLE 2.5

ESTIMATES OF THE BOATS
AFFECTED BY THE FEDERAL MSD REGULATIONS
1977 TO 1979

Boat Size Class	# Registered Boats* (1979)	Estimated # Boats w/Toilets** (1979)	Estimated # Boats ** Affected by Fed. MSD Reg. (1977 - 1979)
16-26	2,699,468	123,096 615,479	69,635 342,176
26-40	213,649	141,863 177,329	95,786 119,733
40-65	27,478	22,614	15,235
TOTAL	2,940,595	287,573 815,422	180,656 483,144

* National Marine Manufacturers Association, Boat Registration Statistics 1979, (Marex); Chicago, IL.

** The methodology used to derive these estimates is provided in Appendix C.

installed toilet inoperable and purchase a portable toilet. Over all possible affected boats, this "correction" would add approximately $30 million to the low estimate, i.e., from Table 2.5, (483,000-181,000) $100 = $30.2 million. However, it is debatable whether or not this should be counted as a compliance cost since the regulations do not cover portable toilets.

2.4.1.7 Estimating 1980 and Beyond

The regulations provide for upgrading all affected boats to Federal standards by 30 January 1980. For some purposes, however, it may be desirable to estimate total compliance costs for 1980 and beyond. In this case affected boats are only those manufactured each year (with toilets and in the 16 to 65 foot range). Table 2.6 presents this annual production estimate. The estimate is based on the 1977 to 1979 average number of boats manufactured (growth trend is not taken into account) and historic proportions of boats utilized in States with treatment of effluent vs. no discharge requirements (See Appendix C for further details). Note that 17,000 to 51,000 boats (about 10% of the total stock of affected boats) could be required to install MSD's annually depending on preference for portable devices. (See Table 2.5.)

2.4.2 Estimated Cost of Total Compliance with Existing Federal Regulations As of the End of 1979

To evaluate alternative policy options it may be instructive to look at what the total compliance costs would have been if all affected boats had complied with current Federal regulations by the end of 1979. Table 2.7 presents such estimates by size of boat and type of device. Note that the total full compliance cost to boat owners is estimated to range from $133 to $333 million. Basically, these numbers have been determined from initial investment cost data in Table 2.4, plus two years of operating and maintenance costs from Table 2.4, multiplied by estimated number of affected boats from Table 2.5 (distributed to devices based on the proportions used for Table 2.6 and all by boat length). Table 2.8 presents a similarily constructed estimate of total costs each year for 1981 and beyond. Note that yearly costs are estimated to be about 10% of the total costs required to bring the existing stock of boats into compliance. Details of calculations are contained in Appendix C.

2.4.3 Historic Costs of Policy Alternatives

For purposes of illustrating how the above framework can be applied to aid analysis of policy alternatives, we have postulated a set of possible policy

TABLE 2.6

ESTIMATED NUMBER OF BOATS

REQUIRING MSDs MANUFACTURED EACH YEAR

SUBSEQUENT TO 1979

Size Class	Boats Requiring MSDs Manufactured Each Year*		Total**
	No Discharge State	Treat./Discharge State	No. of new boats
16' - 26'	2,500 12,600	5,500 27,700	8,000 40,300
26' - 40'	1,800 2,200	5,600 7,000	7,400 9,200
40' - 65'	400	1,300	1,800
Total No. of New Boats	4,700 15,200	12,500 36,000	17,200 50,300

*Based on historical proportion of utilization.

**Basically determined by dividing the total number of boats built during the 1977 to 1979 period by three. Further detail is provided in Appendix C.

TABLE 2.7

ESTIMATED TOTAL COMPLIANCE COST OF FEDERAL MSD REGULATION

OVER 1977 - 1979 PERIOD

(Millions of Dollars)

BOAT SIZE CLASS	COMPLIANCE COSTS		TOTAL COMPLIANCE COST
	TYPE I	TYPE III	
16' - 26'	39.1* 195.3	6.9 34.6	46.0 229.9
26' - 40'	60.0 75.0	7.4 9.2	67.4 84.3
40' - 65'	16.8	2.6	19.3
TOTAL COSTS	115.9 287.1	16.9 46.4	132.7 333.5

*An example calculation is as follows:

Data: Table 2.4 - Investment cost $800 plus 2 years operating and maintenance, $16 = $816
Table 2.5 - Affected boats, 69,635
Table 2.6 - Proportion "Treatment/Discharge State" = 5,500 ÷ 8,000 = 0.6875

Calculation: $816 x 69,635 x .6875 = $39,065,235 ≃ $39.1 million

TABLE 2.8

ESTIMATED COST OF 100% COMPLIANCE WITH

FEDERAL MSD REGULATIONS EACH YEAR AFTER 1979*

(Millions of Dollars)

BOAT SIZE CLASS	ANNUAL COMPLIANCE COST		TOTAL ANNUAL ADDITIONAL COSTS
	TYPE I	TYPE III	
16' - 26'	4.5 22.6	0.7 4.0	5.2 26.6
26' - 40'	4.5 5.8	0.5 0.7	5.0 6.5
40' - 65'	1.9	0.3	2.2
TOTAL ADDITIONAL COSTS	10.9 30.3	1.5 5.0	12.4 35.3

*Encompasses only new boats manufactured each year. Costs include the initial investment plus one year of operation. The annual operating and maintenance costs of boats built in prior years is not considered.

alternatives and calculated 1977 to 1979 total compliance costs based on the data presented above. The policy options examined are the following:

(I) Require all vessels that were not in compliance with the regulation as of January 1977, and all vessels built after 1977, to install the Type I macerator/chlorinator MSD;

(II) Require all vessels built after January 1977 to install the Type I macerator/chlorinator MSD; all "existing" vessels would be allowed to retain the device presently installed on that vessel.

(III) Require holding tank Type III MSD's on all vessels that were not in compliance with the regulation as of January 1977, and all vessels built after January 1977; and;

(IV) Require holding tank Type III MSD's on all vessels built after January 1977; "existing" vessels would be allowed to retain the device presently installed on that vessel.

Table 2.9 summarizes the results of the policy alternative compliance cost analyses. It presents the costs associated with each of the four options described above plus those associated with existing regulations. The costs to comply with the proposed EPA program options range from a high of $405 million to a low of $18 million. Note that only Option I exceeds the costs of current regulations and that Option IV would probably be the least costly program for boat owners. However, substantial arguments against Option IV can be made on both cost-effectiveness and equity grounds, i.e., most boats would be excluded from regulations. These arguments can also be raised with even more validity against Option II, since its cost is higher. Among those remaining alternatives (I, III and current regulations), on the surface at least, Option III would appear to minimize costs and maximize effectiveness, i.e., it would be more effective and cost 40% less. However, substantial additional data collection and analyses would be necessary before a final conclusion could be drawn from the alternatives.

TABLE 2.9

ESTIMATED COMPLIANCE COSTS FOR ALTERNATIVE POLICY OPTIONS

OVER THE 1977 - 1979 PERIOD

(Millions of Dollars)

BOAT SIZE CLASS	TOTAL COMPLIANCE COST 1/				
	Option I	Option II	Option III	Option IV	Current Regulations
16' - 26'	56.8* 284.1	19.7 98.6	22.1 110.7	7.7 38.4	46.0 229.9
26' - 40'	78.9 98.7	18.2 22.7	30.8 38.6	7.1 8.9	67.4 84.3
40' - 65'	22.3	7.8	10.2	3.6	19.3
TOTAL	158.1 405.1	45.7 129.1	63.2 159.5	18.4 50.9	132.7 333.5

1/ Total compliance costs for each option = (# of boats by size class affected by specific EPA policy decisions) x (the total compliance costs per boat by size class).

* For example, from Table 2.4 it can be determined that investment plus 2 years operating costs for a Type I device equals $816. Table 2.5 shows that 69,635 boats are affected: $816 x 69,635 $56,822,160 ≈ $56.8 million.

2.5 "POPULAR PRESS" REPORTING OF THE MSD ISSUE

The "popular press" here refers primarily to newsletters, magazines, and journals aimed at the boating public. Since the MSD issue is a concern almost exclusively of boaters, marinas, boat builders, and manufacturers of boat equipment, most of the popular literature addressing the issue is found in boating newsletters and magazines. This section includes views expressed in featured articles, editorials, and letters to the editors.

The majority of news coverage on the MSD issue centers on providing the reader with an interpretation of the regulations, and information about the devices. Opinions of readers have been a significant source of the "positions" outlined in the following sections. Typically, the people who are content seldom speak out and it is those who view themselves as being adversely affected who are most ready to express their dissatisfaction.

2.5.1 Environmentalists' Positions

Environmentalist positions appearing in the popular press on the MSD issue generally provide a layman's discussion of what is found in the scientific literature describing effects of raw sewage and disinfectant chemicals on the aquatic or marine environment.

People discussing MSD's from an environmentalist position are frequently boat owners who do not want the general public to perceive them as careless polluters. They object to unsanitary waters in marinas, harbors, and parts of the Coastal Waterway, but do not necessarily believe that MSD's or the regulations would help clean up these areas.

If any consensus could be discerned, it would be the view that the chemicals released into the water each time an approved MSD is discharged are at least as bad as, if not worse than, the raw sewage. The commentary generally asserts that the chlorine and formaldehyde used as disinfectants poison the environment. It is often stated that MSD chemicals, even in small quantities, destroy fish eggs, shellfish spawn, small fish, and young aquatic plants. It is also argued that urine should not have to be treated at all because it does not transmit bacteria and viruses and it is generally nontoxic.

The prime target of most of these arguments about chemical impacts is the Type I MSD.

Some boaters contend that fecal material, like other organic matter, provides nutrients to aquatic organisms, but should be macerated before discharge. There is evidence in the boating and marine press that shellfish can be contaminated by raw sewage. A marine trade newsletter referred to a study of clams in which it was shown that it took 24 hours for the clams to purge themselves of the coliform from sewage. 101

2.5.2 Boating Interest Group Positions

Among boat owners, there appears to be a general consensus of opposition to MSD requirements as evidenced by the "popular press." This opposition centers around two basic objections: one concerning the devices themselves and the other concerning the regulations and their implications.

The principal reasons boat owners object to MSD requirements may be summarized as follows:

(1) Cost of the device. Many owners complain about the high cost of purchasing and installing a macerator/chlorinator system that will enable them to discharge treated wastes overboard. The objection is not so much to the added cost of a new vessel, but to the perceived cost burden involved in retrofitting an extisting on-board toilet system. Holding tanks and portable tanks, which cost less than a Type I device but require onshore disposal facilities, are objected to because charges for pumpouts (reported as high as $10 or more in some places) are viewed as an unreasonable expense.

(2) Maintenance Problems. In a survey published by Cruising World in October 1979, participants were asked their views about MSD's. Among the 242 respondents, 40 indicated that they had Type I devices; about half of those reported service or maintenance problems. More significantly, 55% of the respondents rated MSD technology as being "less than adequate' and another 27% rated it as "inoperable." Many boat owners independently expressed the feeling that they had been required by the Federal government to purchase and install expensive equipment that often doesn't work.[61]

(3) Inadequate pumpout facilities causing inconvenience and odor. Much of the literature addressing MSD's acknowledges that pumpout facilities are few and far between. For those who have pumpout facilities where they moor their boats or buy fuel, and never venture away for longer than a weekend, this presents no problem (except when that facility is shut down for extended periods when it is needed most). Much of the boating public, however, value their vessels as a means of exploring more distant harbors and secluded areas. These are the people faced with the unpleasant prospect of having a full tank and no place to dispose of its contents. Of the 124 respondents who commented on the availability of pumpout facilities in the Cruising World survey, 43 percent indicated that they were "not available," and another 36 percent indicated that they were "available with difficulty." Difficulties that were described included having to maneuver into a small or crowded docking area, finding that the pumps were not working, finding that the facility was operated during only limited hours, and needing to leave the boat to hunt for the facility attendant. The odor objected to is not only that of the raw sewage but also of the chemicals used. In the survey conducted by Cruising World, 88 respondents indicated that they used a Type III MSD, and of these, 73 percent replied that it emitted a bad odor. Among the 39 respondents with Type I MSD, 31 percent reported bad odors. (Only 5 respondents had a Type II device.)

(4) Space and power requirements. Sailors more often than power boaters object to the space and power required for the MSD. Space is of particular concern in the Type II and III MSD's where sizable tanks are needed to accomodate the treatment medium or hold the sewage. Not only do people complain about sacrificing limited storage space for the tanks, but for yacht racers the added weight is viewed as a penalty. Many small sailing vessels equipped with outboard engines do not have an onboard means of recharging batteries drained by use of their MSD. Even those that have built-in engines may find that the MSD drains power they can scarcely afford when they are under sail. For these reasons, many sailboat owners would prefer to use an MSD that was compact and manually operated, if one were available.

Additionally, boaters object to the regulations, the manner in which they were developed, what they see as a "hand-in-glove" relationship between the government and the manufactuer of certified MSD's, and the rationale for what are perceived to be particularly stringent regulations.

Many letters to editors of journals indicated that the regulations are confusing. Owners of boats built before 1975, who have a device more sophisticated than just a macerator, often say they don't know whether their equipment meets the coliform discharge limitations of the regulations. Many owners with holding tanks and recirculating systems who inject disinfectant into their

system believe they have treated their sewage as well as a Type I MSD and should not be required to pay for shore based pumpout facilities. The apparent consensus expressed by boaters and editorial writers in boating journals is that the regulations are a tangled mess.

Boaters also express their belief that noncompliance with the regulation is inevitable, justifiable, and to a certain extent, tolerated by the Coast Guard. If a boat owner has a holding tank equipped with a Y-valve, and there are no shore pumpout facilities where the boat is used, the owner will likely discharge the waste the first time he perceives no one is looking. To the extent that this occurs, the regulations are not effective. Many boaters say that while they do not object to pollution control, they do object to unworkable regulations.

Anger over the government's perceived role in ensuring a sizable profit manufacturers of certified MSD's has surfaced in letters from the boating public. Complaints are even more frequently raised about the charges for shore-based pumpout facilities--enterprises that owe their existence to the regulations. Boat owners express a sense of being victimized by MSD manufacturers and pumpout stations as a direct result of the regulations.

What disturbs most boaters about the regulations is that they do not believe that their sewage creates a problem requiring such strict regulations. While most boaters will acknowledge that the waters at many marinas are generally unfit for swimming because of discharges from toilets, galleys, and bilges, they do not believe that a prohibition on all sewage discharges within three miles of the coast is justified to prevent what they view as a small number of isolated incidents of pollution.

An article by Dan Spurr published in Cruising World in August, 1980 promoted the idea that the discharge of raw sewage from boats had to be stopped in order to provide clean shellfish, safe swimming areas, and safe drinking water from the Great Lakes.[81] This article elicited considerable response from the journal's readers. Among those who responded was Stuart Ragland, Jr., M.D., who challenged anyone to show evidence of cases of disease attributable to the discharge of raw sewage from small craft.[75] He argued that

the coliform count in harbors and inland waters is higher in winter than in summer because cities chlorinate their sewage in summer months, yet there are no noticeable increases in hepatitis or typhoid between winter and summer, and no epidemiological data to link sewage discharges from pleasure boats to outbreaks of these diseases. Dr. Ragland, in expressing these views, spoke for many who believe that the significant pollution risk for shellfish beds, swimming areas, and drinking water supplies is from cities with inadequate sewage systems, not from boaters. Their position is that to encumber the boater with impracticable regulations for the sake of having a complete set of regulations that includes all discharges, is to value bureaucratic order more than real world evidence.

For many years, boaters have held to the ethic of not dumping anything overboard that is not biodegradable. Boaters object to floating trash for aesthetic reasons and because it interferes with their propellers. The ethic includes such ideas as puncturing aluminum cans at both ends to ensure that they will sink to the bottom. Trash is almost invariably brought back to the dock to be dumped in a garbage bin on shore. This works relatively well using only an "honor system." What concerns many boaters is that the regulations imply that they eagerly defile the water. Why else would the regulations insist on specific approvable devices? If shellfish beds, beaches, and water intake areas were the real concern, it is argued that these areas could simply be posted as off limits to anchoring pleasure boats.

Boaters use the water around them to swim, water ski, scrub their decks, and clean their anchors. Many of them also enjoy eating fish and shellfish from the waters where they use their boats. They are not against clean waters, but they object to regulations which they feel are unworkable, misguided, and not linked to real problems.

2.5.3 Other Key Interest Groups

Other key interest groups are the manufacturers of MSD's, boat manufacturers and the regulatory personnel at the State level concerned with aquatic and marine sanitation. Apart from their advertising in the boating journals, manufacturers of marine products occasionally express incisive personal views

in their own business literature. The view most often expressed by MSD manufacturers is that coordinated efforts should be made within the industry to induce the Coast Guard to be stronger in its enforcement of the existing EPA regulations. Specifically, this industry would want to see more vessel inspections and more fines obtained from violators. Chapter 3 reports the results of a Coast Guard-sponsored survey regarding MSD's that was sent to both MSD manufacturers and pleasure boat manufacturers. Information that was obtained from nearly all States is also presented.

Intentionally Blank Page

CHAPTER 3

PRIMARY DATA ON KEY MSD INTEREST GROUPS

Intentionally Blank Page

3. PRIMARY DATA ON KEY MSD INTEREST GROUPS

3.1 OBJECTIVE OF PRIMARY DATA COLLECTION

The gathering of primary data was intended to complement the search for secondary information by:

- providing up-to-the-minute assessments of how key groups view the current status of the MSD regulations, and
- identifying additional research, studies and other materials that would add to the compilation of secondary data sources.

Given the focus on providing information relevant to the evaluation of alternative MSD regulatory policies, there was a specific need for current information concerning:

- the present status of State MSD-related laws and regulatory programs;
- State views regarding the adequacy of the Federal role in MSD standard-setting, monitoring and enforcement; and
- the probable response of the States if the present Federal regulations were rescinded, effectively returning to the States regulation of MSD's.

This section of the report presents the findings of the primary data-gathering that was completed during the project.

3.2 IDENTIFICATION OF THE "KEY PUBLICS" INVOLVED IN MARINE SANITATION

The key groups which have a major direct interest in marine sanitation devices for pleasure craft can be readily identified:

- manufacturers of MSD's;
- boat builders and marinas who must help their clients meet the mandate for installation of a U.S. Coast Guard-certified device on all new craft that are equipped with permanent heads; and
- the boat owners who must comply with the Federal regulations now in effect for both new and existing vessels.

It is less easy to circumscribe the groups that have an indirect interest in MSD regulation, but quite clearly all of the people who may be termed the "non-boating public" can be potentially affected by the discharge of human waste from recreational vessels into the Nation's waters.

3.2.1 U.S. Coast Guard MSD Survey

The seven weeks available for primary data gathering was not sufficient to allow a broad, systematic survey of the concerns of each of the key groups involved in the MSD controversy. Fortunately, early in the study period, it was learned that the Merchant Marine Technical Division of the Office of Merchant Marine Safety of the U.S. Coast Guard had commissioned the David W. Taylor Naval Ship Research and Development Center (NSRDC), Annapolis Laboratory, to investigate the problems inherent in requiring Type II sewage treatment systems on vessels 65 feet in length or less.

In late summer, 1980, as part of the research project, the NSRDC sent a questionnaire to more than one hundred MSD manufacturers, boat builders and boating organizations to determine the immediate concerns of the marine industry regarding marine sanitation devices. While the Type II study is still on-going, the Coast Guard approved access to the original survey documents to obtain any information pertinent to EPA's review of the MSD regulations.

While specifically directed at investigating the feasibility of developing Type II treatment systems for small craft and identifying the factors that influence corporate decisions to proceed with the commercial development of Type II systems, the Coast Guard survey investigated many issues concerning the overall acceptance and use of MSD's. The Coast Guard survey was sent to a total of 107 potential respondents classified into four groups, as shown below in Table 3.1 together with the number of questionnaires returned through February 1, 1981.

TABLE 3.1

BREAKDOWN OF RESPONSE TO U.S. COAST GUARD MSD SURVEY

	Sample Size	Responses	Percent Response
MSD Manufacturers	28	17	61%
Powerboat Manufacturers	46	18	39%
Sailboat Manufacturers	23	8	35%
Boating Organizations	10	3	30%
TOTAL	107	46	43%

3.2.2 Limitations of the Primary Data

Because the Coast Guard survey was conducted by mail, the overall response rate of 43% is good, although it would have been particularly helpful to have more returns from the boating organizations. It must be remembered that the respondents were not randomly selected from an identified universe of institutions within each of the four subgroups. Because representativeness cannot be assured, care must be taken in interpreting the results. It is true, of course, that the number of MSD manufacturers, powerboat manufacturers, etc., is small and that the survey covered typical organizations in each of the four groups. For the purposes of reporting the data, the responses of the power boat and sailboat manufacturers have been combined into one group of "boat manufacturers."

In line with noting the characteristics of the Coast Guard sample, it is also important to acknowledge that neither time nor funding was available to initiate a primary data-gathering effort among the boating and non-boating public. The anti-MSD position of a major segment of the owners of larger pleasure craft is voiced clearly in the secondary literature. As is discussed below in more detail, the general consistency of how the other major interests view the difference of opinion on MSDs between boaters and non-boaters is strongly indicative of the result that would probably have been obtained had the boaters and non-boaters been asked to voice their opinion about MSDs.

3.2.3 Discussions with State Officials Concerning MSD Matters

The Coast Guard was also helpful in identifying the appropriate State officials to contact regarding MSD policies. The contact lists for the States provided by the Coast Guard greatly expedited the task of locating the individual in the State government who was in the best position to discuss the States' MSD-related activities.

A topic guide was developed to guide the telephone discussion with State personnel about their State's involvement in MSD-related activities. Table 3.2 reveals that a majority of the State personnel contacted concerning MSD issues were acting as State Boating Law Administrators in positions with State departments of game and fish, natural resources, parks and recreation, and related departments. If the initial contact suggested by the Coast Guard did not feel well-informed about MSDs or if he or she felt someone else

could offer more information on particular parts of the discussion, an alternate respondent was then located. These individuals included specialists in water quality and wastewater sanitation.

TABLE 3.2

GENERAL OCCUPATIONAL CATEGORY OF STATE PERSONNEL CONTACTED ON MSD ISSUES

	Number Contacted
Boating Law Administrator/ Boating Coordinator	26
Marine Police/Other Boating Enforcement Officer	13
Water Quality Specialist	6
Sanitary Engineer	3
Health Department Official	1
TOTAL	49*

* Includes District of Columbia and all States with the exception of Alaska and Massachusetts.

In general, the State personnel were well informed about regulatory issues pertaining to MSDs at both the State and Federal level. This was particularly true of those individuals in States where water quality was a top priority issue, such as those States with EPA-approved no-discharge waters. A majority of the contacts were aware that the Federal regulations applied only to boats with permanently installed toilets. Fewer individuals were familiar with all three basic types of MSDs (i.e., could describe the

type of equipment with the Coast Guard classification of Type I, II, and III). All of the State personnel seemed well-acquainted with their own State's laws (if any) regarding marine waste disposal and MSD's.

3.3 OVERALL PERCEPTIONS OF THE MARINE POLLUTION PROBLEM

Respondents to the Coast Guard survey were asked to say what they perceived to be the non-boating and boating public's attitude toward MSD requirements. As noted at the foot of Table 3.3, consideration of the results must take into account that a number of respondents say one cannot reasonably assess the non-boating public's attitude because they are likely to be unaware of the issue altogether. Even after taking that into account, however, it is still apparent that the non-boaters are viewed as much stronger supporters of MSD's than the boating public.

The 17 MSD manufacturers responding perceive the widest rift, with none saying that the boating public believes MSD's are "needed" and roughly 60% (10 manufacturers) saying the boating public thinks MSDs are "not needed." All three of the boating organizations also indicate that boaters do not see the need for MSD's. A considerably higher percentage of boat manufacturers appears to think that boaters do see the need for MSD's. About twice as many boat makers say the boating public sees MSD's as "needed" or "desirable" (23% + 46% = 69%) than the MSD manufacturers, only 35% of whom say boaters see MSD's as "desirable."

When the State contacts were asked about how they perceived the attitude of the boating and non-boating public, the profile of their response conformed with that of the boat manufacturers. Over 60% of the State contacts say that the boating public believes MSD's are either "desirable" or "needed." The remainder believe the boating public opposes MSD's.

The perception that the boat manufacturers and State contacts have that the majority of boaters see MSD's as at least "desirable" does not conform to the impression of the boaters' position that is reflected in many prominent boating magazines. It would be wise to remember that the percentage of boaters with vessels large enough to have an installed head is a small proportion of all boaters in the United States. While we have not uncovered any survey that compared the attitudes of owners of boats without heads to those of owners of boats with heads, one might expect to find that the fishermen or water-skiing enthusiasts with small boats would be inclined to favor the control of sewage

TABLE 3.3

PERCEPTION OF PUBLIC ATTITUDES TOWARD MSD REQUIREMENTS

What do you perceive as the (non-boating)(boating) public's attitude toward requiring an MSD on recreational vessels less than 65 feet in length?

		Needed		Desirable		Not Needed		Non-B.P. Unaware[a]	No Opinion; Don't Know[a]	
	%-age Base	Non-B.P.[b]	B.P.[c]	Non-B.P.	B.P.	Non-B.P.	B.P.	Non-B.P.	Non-B.P.	B.P.
MSD Manufacturers[d]	17	35%	0%	24	35	12	59	--	29	6
Boat Manufacturers[d]	26	31%	23%	42	46	8	31	--	19	0
Boating Organizations[d]	3	33%	0%	33	0	0	100	--	33	0
State MSD Contacts[a]	49	36%	35%	28	27	2	39	29	6	0

[a]The State data were obtained during telephone discussions in which many (31%) of the State contacts said they felt the non-boating public was generally unaware of this issue and, therefore, could not be viewed as having an opinion. The data for the three other groups were obtained on a structured self-administered survey and show much higher percentages registering "no opinion"; it is likely that many of these respondents are also saying that the non-boating public has too little awareness of this issue to have an opinion.

[b]Non-B.P. means "Non-Boating Public."

[c]B.P. means "Boating Public," those who own recreational vessels.

[d]Source: Survey regarding Marine Sanitary Devices by the David W. Taylor Naval Ship Research and Development Center; Annapolis Laboratory, for the U.S. Coast Guard Survival Systems Branch, Merchant Marine Technical Division, Office of Merchant Marine Safety, Fall 1980. (Hereinafter this source is identified as the U.S. Coast Guard MSD Survey, 1980.)

discharge from larger pleasure craft. In the absence of any clearer definition of who constitutes the "boating public," and having limited secondary opinion data from the boaters themselves (e.g., the Cruising World survey reported in 2.5.2), it is important to consider whether the attitudes within the boater population may be stratified depending on the type and size of boat and how the boat is principally used by its owner (e.g., fishing, sailing, scuba-diving cruising, etc.).

The Coast Guard survey asked a follow-up question about the need to install Type II or Type III MSD's on recreational vessels, and, while the balance of opinion did not change, higher percentages say that boaters see Type II and III devices as unnecessary.

3.3.1 Effect of Regulation on MSD Compliance

Significantly, Table 3.4 reveals that there is no agreement as to the effect environmental regulations have had on the installation of MSD's. (The question wording leaves some room to consider whether it refers specifically to regulations for MSD's or to environmental regulations in general, but in context it is likely that most read it as meaning MSD regulations.) The results suggest that regulations are not viewed as being an adequate stimulus for MSD installation.

3.3.2 Level of Enforcement Needed

The results reported in Table 3.5 may contribute to explaining why regulations are viewed as not having had greater impact on MSD installation. In referring to the level of enforcement necessary to insure proper use of a Type II device, three-fourths of the MSD Manufacturers said "strict" enforcement efforts would be required. A clear majority of the boat manufacturers also believes that "moderate" or "strict" enforcement would be necessary. These data, along with comments that were written in about these questions, indicate that strong enforcement measures are thought to be necessary in order to ensure that any type of MSD is installed.

Of those State contacts who gave an estimate of the percentage of regulated vessels now in compliance, they appear either to know whether a great many are in compliance (over 75%) or whether most are not in compliance (0-25%). Of the 13 States that are estimated to have compliance over 75%, seven are States with EPA-approved "no discharge" areas. The compliance estimates are reported in Table 3.6.

TABLE 3.4

PERCEPTION OF THE IMPACT OF REGULATIONS ON INSTALLATION OF MSDs ON PLEASURE CRAFT

In your opinion, what impact have the environmental regulations had on the installation of MSDs on pleasure craft?

	%-age Base	Significant Impact	Some Impact	Little Impact	No Impact	No Response
MSD Manufacturers	17	18%	24	59	0	0
Boat Manufacturers	26	46%	38	15	0	0
Boating Organizations	3	0%	33	33	0	33

Source: U.S. Coast Guard MSD Survey, 1980.

TABLE 3.5

PERCEPTION OF DEGREE OF ENFORCEMENT

REQUIRED TO INSURE PROPER USE

OF TYPE II MSD

In your opinion, what relative degree of enforcement would be required to insure the proper use of Type II MSD's?

	%-age Base	Strict	Moderate	Minimal	Voluntary	No Response
MSD Manufacturers	17	76%	24	0	0	0
Boat Manufacturers	26	35%	31	15	19	0
Boating Organizations	3	33%	0	33	0	33

Source: U.S. Coast Guard MSD Survey, 1980.

TABLE 3.6

ESTIMATION OF PERCENTAGE OF RECREATIONAL VESSELS WITH MSDs

From what you know, about what percentage of the recreational vessels in your State that are equipped with built-in heads have installed marine sanitation devices to comply with Federal regulations?

	State Contacts (Percentage Base = 49)
0-25 percent	39%
26-50 percent	4
51-75 percent	6
Over 75 percent	27
Don't know	24

Source: Telephone discussions with State personnel regarding State marine sanitation policies.

3.4 RELATIVE IMPORTANCE OF MSD OPERATING CHARACTERISTICS

Table 3.7 reveals that nearly half of the State contacts mentioned the lack of pumpout facilities as an important factor that discourages the use of MSD's. The cost of the devices was the next most frequently mentioned reason. It is important to note that two of the factors -- lack of pumpout facilities and lack of uniform discharge laws -- have nothing to do with the mechanical or performance characteristics of the devices themselves.

The Coast Guard survey respondents were asked to specify what they felt is a reasonable retail price range for an MSD for the three size classes of small vessels. The full distribution of the estimates is shown in Table 3.8. Because the technology is not specific, the estimates can be interperted as what respondents believe is a reasonable price to ask someone to pay to treat a vessel's sewage. Recalling the average MSD Type I and Type III selling prices presented in Table 2.4, the grand mean estimates are much lower than the projected investment costs for Type I devices in each boat size category but are higher than the projected investment costs of Type III holding tank devices in each of the size categories.

The Coast Guard survey asked respondents to rate the importance of a dozen characteristics of a small vessel Type II MSD for both powerboat and sailboat applications. The results are shown in Table 3.9. Simplicity of operation is viewed by the largest number as the key factor for powerboats, and physical size receives the most mention as the key factor for sailboats. These respondents were also asked to identify the reasons why boat owners select or do not select each of the major types of MSD's. These comments are summarized in Tables 3.10-3.13.

TABLE 3.7

MAJOR FACTORS DISCOURAGING THE USE OF MSDs

What are the major factors discouraging the use of marine sanitation devices?

	State Contacts (Percentage Base = 49)
Lack of pumpout facilities for holding tank devices	49%
Cost (in general)	35
- purchase cost	6
- installation cost	4
- operating cost	6
Lack of adequate enforcement of current MSD regulations	14
Maintenance requirements	10
Lack of uniform discharge laws across all states	6
Physical size of the devices	4
Power (electricity) required	4
Possibility that the regulations may change	4
None; no real discouraging factors; boaters aren't resisting	10
Other answers:	39

- Inconvenience of holding tanks, e.g., odor and pumpout
- Other sources of pollution not controlled, e.g., municipal wastewater and storm-water discharge
- Need for MSD's not sufficiently proven
- Majority of boats too small to need an MSD
- Apathy of boaters to install MSD
- Confusion created by various interest groups

(Percentage totals more than 100 because of multiple reasons given.)

Source: Telephone discussions with State personnel regarding State marine sanitation policies.

TABLE 3.8

MSD PRICE RANGE ESTIMATES

What do you consider to be a reasonable retail price range for small vessel MSDs for boats in the following size ranges?

A) MSD Manufacturers

	BOAT SIZE CLASS								
	LESS THAN 25 FEET			25 FEET TO 45 FEET			45 FEET TO 65 FEET		
	LO	MID	HI	LO	MID	HI	LO	MID	HI
1)		400			500			750	
2)	200	(250)	300	300	(450)	600	900	(1200)	1500
3)		<500		500	(750)	1000	1000	(500)	2000
4)		<100		150	(175)	200	200	(350)	500
5)		100			350			500	
6)	350	(375)	400	350	(925)	1500	1000	(2000)	3000
7)		500		500	(625)	850	850	(1000)	1150
8)		2500*			5000*			12,000*	
9)	50	(75)	100	100	(550)	1000	1000	(2000)	3000
10)		450			450			450	
11)		800			800			800	
12)	400	(450)	500	400	(450)	500	400	(450)	500
13)	600	(800)	1000	600	(800)	1000	600	(800)	1000
14)		250			500			500	
15)	150	(225)	300	150	(225)	300	150	(225)	300
16)		250			350			450	
17)		<100		100	(125)	150	250	(325)	400
(TOTAL =		$5625 ÷	16 ests.)		($8025 ÷	16) =		($12,300 ÷	16) =
Average Est. Cost=		$ 352			$ 502			$ 769	

B) Powerboat Manufacturers

1)		200			300			500	
2)		100			400			900	
3)	50	(175)	300	150	(325)	500	250	(575)	900
4)		150			200			350	
5)		300			495			NR	
6)		300			400			500	
7)		200			400			600	
8)		100			300			1,000	
9)		200			300			600	
10)		NR			NR			NR	
11)		NR			NR			NR	
12)		NR			NR			NR	
13)		200			400			600	
14)	250	(275)	300		NR			NR	
15)		250		500	(625)	750	500	(625)	750
16)		NR			NR			NR	
17)		NR			NR			NR	
18)		NR			NR			NR	
(TOTAL =		$2450 ÷	12 ests.)		($4145 ÷	11) =		($6250 ÷	10) =
Average Est. Cost=		$ 204			$ 377			$ 625	

(continued)

JRB Associates, Inc.

TABLE 3.8

(Continued)

C) Sailboat Manufacturers

	LESS THAN 25 FEET			25 FEET TO 45 FEET			40 FEET TO 65 FEET		
	LO	MID	HI	LO	MID	HI	LO	MID	HI
1)	200	(238)	275	250	(325)	400	300	(400)	500
2)		200		500	(600)	700	500	(600)	700
3)		250			500			750	
4)	200	(300)	400	250	(500)	750	1000	(2000)	3000
5)	50	75	100	100	(175)	250	250	(325)	400
6)		100			200			400	
7)		130			400			400	
8)		NR			NR			NR	
(TOTAL =		$1293 ÷ 7 ests.)			($2700 ÷ 7) =			($4875 ÷ 7) =	
Average Est. Cost=		$ 185			$ 386			$ 696	

D) Boating Organizations

1)		NR			NR			NR	
2)		100			150			250	
3)		NR			NR			NR	
(TOTAL =		$100 ÷ 1 est.)			($150 ÷ 1) =			($250 ÷ 1) =	
Average Est. Cost=		$100			$150			$250	
(Grand Total Estimates :		$9,468 ÷ 36 ests.)		(GTE:	$15,020 ÷ 35 ests.)		(GTE:	$23,675 ÷ 34 ests.)	
Grand Mean Estimates :		$ 263		GME: $	429		GME: $	696	

* Excluded from calculations to avoid skewing the small data set.

Source: U.S. Coast Guard MSD Survey, 1980

TABLE 3.9

RELATIVE IMPORTANCE OF MSD (TYPE II) OPERATING CHARACTERISTICS

For (power boats) (sail boats), what relative importance would you assign to the following characteristics for a small vessel (less than 65 feet) Type II MSD:

	Very Important						Important						Slightly/Not Important					
	MSD Mfrs.		Boat Mfrs.		Boat Orgzns.		MSD Mfrs.		Boat Mfrs.		Boat Orgzns.		MSD Mfrs.		Boat Mfrs.		Boat Orgzns.	
	Power	Sail	Power	Sail	Power	Sail	Power	Sail	Power	Sail	Power	Sail	Power	Sail	Power	Sail	Power	Sail
Simple to Operate	65%	41%	56%	50%	100%	100%	29	47	35	39	0	0	6	12	9	11	0	0
Purchase Cost	59%	59%	48%	50%	67%	100%	41	35	39	39	33	0	0	6	13	11	0	0
Installation Cost	59%	59%	48%	33%	67%	100%	41	35	26	50	33	0	0	6	26	17	0	0
Physical Size	53%	94%	56%	83%	33%	50%	47	6	35	17	33	50	0	0	9	0	33	0
Serviceability	47%	41%	48%	50%	100%	100%	35	47	43	39	0	0	18	12	9	11	0	0
Maintenance Requirements	41%	47%	43%	44%	67%	50%	47	47	48	39	33	50	12	6	9	17	0	0
Power Required	35%	100%	43%	78%	33%	50%	47	0	48	22	33	50	18	0	9	0	33	0
Operating Cost	29%	35%	13%	17%	100%	50%	53	47	43	44	0	50	18	18	43	39	0	0
Capacity	18%	18%	26%	11%	67%	50%	59	59	65	78	33	50	23	23	9	11	0	0
Weight	18%	64%	13%	39%	0%	50%	41	18	39	44	0	50	41	18	48	17	100	0
Disinfectant Requirements	18%	12%	9%	11%	0%	50%	64	65	43	39	67	50	18	23	48	50	33	0
Operating Noise	12%	12%	0%	6%	0%	0%	35	44	52	44	33	50	53	44	48	50	67	50

Source: U.S. Coast Guard MSD Survey, 1980.

TABLE 3.10

REASONS TYPE I FLOW-THROUGH MSD SELECTED OR NOT SELECTED

	PRO TYPE I	CON TYPE I
A) MSD Manufacturers		
	- ease of use	- expensive - purchase & operation
	- no onboard storage of sewage	- too large
	- easy to defeat by not using sanitizer	- electric power consumption
	- requires little modification	- requires maintenance and servicing
	- general lack of knowledge of MSD's	- unreliable operation
	- less stringent effluent standards	- complexity of equipment
	- smaller size	
B) Powerboat Manufacturers		
	- will use if over-board discharge allowed	- too expensive
	- convenient	- power requirements
	- easy to use	- poor reliability
	- pump-out	- odor
	- better size	- chemicals needed
		- not totally accepted in U.S. and not at all in Canada
C) Sailboat Manufacturers		
	- convenient system	- high cost
	- low cost of operation	- high power requirements
	- lower price than Type II	- complexity
		- poor reliability
		- not legal in all area
D) Boat Organizations		
	- easy to purchase	(none given)
	- lowest price	
	- simple to operate	

Source: U.S. Coast Guard MSD Survey, 1980.

TABLE 3.11

REASONS TYPE II FLOW-THROUGH MSD SELECTED OR NOT SELECTED

	PRO TYPE II	CON TYPE II
A) MSD Manufacturers		
	- more ecologically sound; better effluent quality	- expensive
	- no pumpout	- lack of availability
	- simplicity of operation	- maintenance and servicing
		- size
		- power requirements
		- difficult to meet discharge specifications
		- limited capacity
B) Powerboat Manufacturers		
	- convenient	- high cost
	- easy to use	- large size
	- minimal maintenance	- large weight
	- superior treatment levels	- lack of availability
		- not well designed; too complex
		- draws too much current
		- odor
		- not totally accepted in U.S. and not at all in Canada
C) Sailboat Manufacturers		
	- inadequate pumpout for Type III	- higher cost
	- convenient system	- high power requirement
		- complexity
		- poor reliability
		- requires more space and service
D) Boat Organizations		
	- least expensive system	- higher cost
	- can utilize existing toilet	- more difficult to find
	- relatively simple to install	
	- inadequate pumpout for Type III	

Source: U.S. Coast Guard MSD Survey, 1980.

TABLE 3-12

REASONS TYPE III-HOLDING TANK MSD SELECTED OR NOT SELECTED

	PRO TYPE III-H.T.	CON TYPE III-H.T.
A) MSD Manufacturers		
	- simple	- lack of pumpout facilities
	- inexpensive	- odors
	- low power	- size
	- little maintenance & servicing	- explosion potential
	- easy to bypass	- price
	- not aware of availability of other type MSD's	
B) Powerboat Manufacturers		
	- simple	- lack of pumpout facilities
	- inexpensive	- psychological problems with carrying sewage on boat
	- meets no discharge requirements	- high cost of pumpout
C) Sailboat Manufacturers		
	- lower price	- lack of pumpout stations
	- relatively compact	- afraid of leaks
	- greater holding capacity than Type III recirculating	- would rather use space for something else
	- easy to operate	- danger of explosion
	- easy to maintain	- size limitations
	- power requirements less for most boats	
	- dockside discharge or offshore through a thru-hull outlet	
D) Boat Organizations		
	- necessary on some waters	- lack of pumpout facilities
		- cost of pumpout
		- installation difficult on many boats, especially sailboats
		- very expensive
		- difficult to maintain
		- odor

Source: U.S. Coast Guard MSD Survey, 1980

TABLE 3.13

REASONS TYPE III-RECIRCULATING MSD SELECTED OR NOT SELECTED

	PRO TYPE III-RECIRCULATING	CON TYPE III-RECIRCULATING
A) MSD Manufacturers		
	- inexpensive	- odor
	- easily installed	- maintenance and servicing
	- greater capacity	- requires chemicals
	- no holding tanks needed	- should be cleaned after every weekend of use
	- compact, self-contained	- limited capacity
	- easy maintenance	
B) Powerboat Manufacturers		
	- lower price	- lack pumpout facilities
	- easy to use	- too expensive
	- more applicable to smaller boats with restricted hull space	- odor
		- poor reliability
		- lack holding capacity
C) Sailboat Manufacturers		
	- lower price	- self-containment
	- compact	- low holding capacity
	- easy to use	- objectionable odors
	- relatively inexpensive installation	- objectionable functioning
		- recirculation flow sporadic
		- lack of pumpout
D) Boat Organizations		
	(none given)	- higher cost
		- odor
		- lack of pumpout facilities

Source: U.S. Coast Guard MSD Survey, 1980.

3.5 PRESENT STATUS OF STATE MSD-RELATED PROGRAMS

More than four out of five of the States are reported to have had laws regulating sewage discharge from waterborne vessels prior to the implementation of Federal MSD regulations. Of these, as seen in Table 3.14 (bottom), nearly two-thirds (63%) say those laws were more stringent than the current Federal MSD regulations. Part A of Appendix E presents a summary digest of State laws pertaining to marine waste disposal as written a decade ago. Part B of Appendix E presents capsule summaries of State Marine waste disposal laws as they exist today. Part C presents summary information regarding the marine sanitation regulation and enforcement program in the Province of Ontario, Canada, because Ontario's program is widely recognized as being very effective, i.e., it achieves a high level of compliance.

The discussions with the State contacts revealed that some of the State officials may not fully understand that Federal MSD regulations have pre-empted all State statutes or regulations with respect to the design, manufacture, installation or use of any MSD as of January 30, 1980. It appears that the States have generally put their existing laws "in mothballs." Many appear ready to quickly reinstitute their own laws should the Federal responsibilities be retracted or eliminated.

When asked whether the State presently plays a role in monitoring and enforcing MSD regulations, half of the State contacts described some form of activity. Of these, about half executed only minimal enforcement programs which are usually a small part of a broader boating safety program. The remainder are said to be more actively involved in MSD enforcement and most of these States have formal enforcement powers by reason of having EPA-approved no-discharge waters.

In spite of the current Federal pre-emption, about one out of four States is reported (Table 3.15) to be weighing a change in its policy on pleasure craft sewage disposal. A summary of the reasons given for potential change is shown in the left column of Table 3.16. As seen in the representative comments in the column to the right, the State contacts do not cite Federal pre-emption as an explanation of why their State's position will not change.

TABLE 3.14

EXISTENCE OF STATE LAWS REGULATING SEWAGE DISCHARGE FROM WATERCRAFT PRIOR TO FEDERAL PREEMPTION

Before the implementation of Federal regulations requiring marine sanitation devices, did your State have its own laws regulating sewage discharge from waterborne vessels?

	State Contacts (Percentage Base = 49)
Yes	82%
No	18%
Don't know	0

Were the State's regulations more stringent, less stringent or about the same as the current Federal MSD regulations? (Asked of those who said "yes" above.)

	State Contacts (Percentage Base = 40)
More stringent	63%
About the same	18%
Less stringent	18%
Don't know	2%

Source: Telephone discussions with State personnel regarding State marine sanitation policies.

TABLE 3.15

PROBABLE CHANGE IN STATE'S POLICY REGARDING MARINE SEWAGE DISPOSAL

Do you foresee any change in the State's position regarding the disposal of sewage from recreational vessels?

	State Contacts (Percentage Base = 49)
Yes	27%
No	69
Don't know	4

Source: Telephone discussions with State personnel regarding State marine sanitation policies.

TABLE 3.16

EXPLANATION OF POSITION REGARDING CHANGE
OF STATE MARINE SEWAGE DISPOSAL POLICY

STATE POSITION WILL CHANGE	STATE POSITION WILL NOT CHANGE
• Federal regulations too involved.	• Not a high priority item, e.g., more concerned over boating safety
• Confusion over types of MSDs required	• Lack of adequate funds and personnel
• If Federal funds supplied for pumpout facility construction	• Satisfied with current Federal regulations, e.g., EPA-approved "no discharge" waters
• Other areas of water quality improving, therefore, vessel sources should also be controlled	• State's regulatory power superceded by Federal regulations
• Enforcement should increase	• State regulations adequate
• Water quality deteriorating under Federal regulations	• No impetus, e.g., complaints by public
• If Federal regulations change	• Regulation of marine waste disposal not necessary from an environmental viewpoint
• Protection of drinking water supplies	• Cooperative boating public has not caused problems
• More pumpout facilities anticipated	• Cannot reasonably enforce due to lack of pump-out facilities
• Boaters applying pressure for compromise	
• Maintain continuity with Federal regulations	

Source: Telephone discussions with State personnel regarding State marine sanitation policies.

TABLE 3.17

STATE SUPPORT FOR STRICTER COAST GUARD ENFORCEMENT OF MSD REGULATIONS

To your knowledge, does the State favor or oppose stricter enforcement of Federal MSD regulations by the Coast Guard?

	State Contacts (Percentage Base = 49)	
Favor	45%	
Oppose	16	
Neutral	12	38%
Don't know	16	
Refused	10	

Source: Telephone discussions with State personnel regarding State marine sanitation policies.

3.6 VIEWS CONCERNING A POSSIBLE CHANGE IN THE FEDERAL ROLE IN MSD REGULATION

That many State contacts are not satisfied with the Federal government's MSD program is indicated by the fact that nearly half report that their State favors stricter enforcement by the Coast Guard. This is seen in Table 3.17. Only 16% express opposition to stricter Coast Guard enforcement. On this sensitive matter, many (38%) State contacts said the State was neutral (12%) or they did not give an answer (26%). The reasons why additional Coast Guard support is either favored or opposed are shown in Table 3.18.

The wide range of opinion among the States concerning Federal MSD regulations is evident in Table 3.19. Thirty percent see the current regulations as inadequate, 38% find them adequate as they are now, and 15% believe they are either too stringent or are unnecessary. The remaining 16% gave a variety of other answers or did not give an answer. This absence of consensus indicates the need to reexamine the regulations and the Federal role in their enforcement.

According to the collective perception of the State contacts, elimination of the Federal MSD regulations and the Coast Guard enforcement role would have little effect on the States. Recalling information reviewed earlier, many States would appear to welcome the departure of the Federal government. As shown in Table 3.20, for 73% of the States, it is reported that Federal withdrawal would not change the State's level of activity (or inactivity) concerning MSD's. For another 18%, it is believed that the State would pass its own water quality standards and strictly enforce them. Because the replies from the State contacts indicate that two-thirds (68% as seen in Table 3.19) of the States find the MSD regulations are acceptable as they are now or not tough enough, it appears probable that most States would step in and enforce their own marine sanitation regulations should the Federal presence be withdrawn for any reason. Not one State was reported to be unable to mount a viable program in the absence of Federal enforcement capabilities.

TABLE 3.18

EXPLANATION OF POSITION REGARDING LEVEL OF COAST GUARD ENFORCEMENT

FAVOR STRICTER ENFORCEMENT	OPPOSE STRICTER ENFORCEMENT
• Regulations not being adequately enforced at present by Coast Guard	• Boaters have not had adequate time to comply
• Increasing number of boats in size classes which require MSDs	• States have not had time to install pumpout facilities
• State needs funding support	• Do not want Federal intervention
• Certain waters, e.g., shellfish beds and drinking water, need more protection	• State enforcement adequate
• State could concentrate on non-navigable waters, leaving navigable waters to Coast Guard	• Federal regulations too stringent for coastal waters
• Enforcement not responsibility of State	• Stricter enforcement on closed bodies of water not feasible due to lack of pumpout facilities
• Equity lacking due to absence of enforcement	• Coast Guard not a well-known or popular entity
	• Coast Guard unnecessary because marine waste disposal not a big problem

Source: Telephone discussions with State personnel regarding State marine sanitation policies.

TABLE 3.19

THE STATES' VIEW OF CURRENT FEDERAL MSD REGULATIONS

In your opinion, what is the State government's position concerning the current Federal MSD regulations. Would you say that the general opinion is that these regulations are...

	State Contacts (Percentage Base = 49)	
Inadequate and should not permit any sewage discharge from any recreational vessel	24%	30%
Inadequate and should require a higher effluent standard	6	
Adequate as they are right now	38	
Too stringent and should only require Type I devices now and in the future	3	15%
Unnecessary because the need for MSDs has not been sufficiently proven	12	
Other answers *	10	16%
Don't know	4	
Refused	2	

*The regulations need clarification; the type of water should be a factor; the regulations are too inflexible; the location of the waters should be the determining factor; there are no Federal funds to help boaters comply.

Source: Telephone discussions with State personnel regarding State marine sanitation policies.

TABLE 3.20

STATE RESPONSE IF THE FEDERAL MSD REGULATIONS WERE ELIMINATED

If the Federal regulations regarding MSDs were eliminated, along with the Coast Guard's role in enforcement, how would the State respond to this situation?

	State Contacts (Percentage Base = 49)
There would be no change in the State's activity/inactivity regarding MSDs[1]	73%
The State would adopt and enforce current Federal standards	0
The State would pass its own water quality standards for MSDs and strictly enforce them	18
The State would be unable to mount a viable program in the absence of Federal enforcement capabilities	0
Other answers[2]	2
Don't know	2
Refused	4

[1]As discussed in the text, because most States are viewed as desiring to enforce marine sanitation regulations at a level equal to or in excess of the Federal standards, it is probable that for most of the States, "no change" implies that existing State MSD laws would be reinstituted.

[2]Increase State activity under State regulations.

Source: Telephone discussions with State personnel regarding State marine sanitation policies.

APPENDIX A

DISTRIBUTION OF PLEASURE BOATS IN THE UNITED STATES

TABLE A.1 REGISTRATION REQUIREMENTS AND STATE TOTALS OF REGISTERED CRAFT

States	Boats Required To Be Registered	1978	1979	Rank In U.S.	Percent Change
Alabama	All motorboats, sailboats, and rental boats	178,259	180,299	18	+1.1
* Alaska	All motorboats	31,503[1]	34,088	40	+8.2
Arizona	All watercraft	85,811	91,510	31	+6.6
Arkansas	All motorboats	204,287	226,165	11	+10.7
California	All motorboats and sailboats over 8 feet in length	548,880	562,061	3	+2.4
Colorado	All motorboats and sailboats	48,617	50,525	35	+3.9
Connecticut	All motorboats	67,398	74,266	33	+10.2
Delaware	All motorboats	29,103	30,721	42	+5.6
District of Columbia	All watercraft	4,050	3,247	52	−19.8
Florida	All motorboats	459,623	480,953	5	+4.6
Georgia	All motorboats and sailboats over 12 feet in length	189,387	194,755	12	+2.8
Hawaii	All motorboats and sailboats over 8 feet in length	13,695	13,678	51	−0.1
Idaho	All motorboats	56,608[1]	58,450	34	+3.3
Illinois	All motorboats and sailboats over 12 feet in legnth	252,562	258,403	10	+2.3
Indiana	All motorboats	163,926	164,589	22	+0.4
Iowa	All motorboats	177,761	184,424	14	+3.7
Kansas	All motorboats and sailboats	76,068	76,711	32	+0.8
Kentucky	All motorboats	108,503	110,174	30	+1.5
Louisiana	All motorboats	281,529	274,778	8	−2.4
Maine	All motorboats	114,403	117,167	27	+2.4
Maryland	All motorboats	131,206	132,536	26	+1.0
Massachusetts	All motorboats	172,113	173,834	19	+1.0
Michigan	All watercraft	469,321	571,007	1	+21.7
Minnesota	All watercraft (with exception)[2]	541,202	563,850	2	+4.2
Mississippi	All motorboats	95,607	110,313	29	+15.4
Missouri	All motorboats and sailboats over 12 feet in length	177,872	181,080	16	+1.8
Montana	All motorboats	29,400[1]	30,776	41	+4.7
Nebraska	All motorboats	42,735	41,383	37	−3.2
Nevada	All motorboats	24,340	26,754	44	+9.9
* New Hampshire	All motorboats	16,124[1]	15,334	50	−4.9
New Jersey	All motorboats	118,769	114,000	28	−4.0
New Mexico	All motorboats and sailboats	37,968	40,469	38	+6.6
New York	All motorboats	327,782	321,470	7	−1.9
North Carolina	All motorboats except boats with electric motors	191,061	191,679	13	+0.3
North Dakota	All motorboats	23,960	28,513	43	+19.0
Ohio	All watercraft	263,366	260,229	9	−1.2
Oklahoma	All watercraft	159,546	162,480	23	+1.8
Oregon	All motorboats and sailboats over 12 feet in length	124,069	139,966	25	+12.8
Pennsylvania	All motorboats	171,276	171,613	21	+0.2
Rhode Island	All motorboats	30,345	20,979	47	−30.9
South Carolina	All motorboats	169,365	180,617	17	+6.6
South Dakota	All motorboats	28,041	24,397	46	−13.0
Tennessee	All motorboats and sailboats	215,292	183,224	15	−14.9
Texas	All motorboats	535,586	545,379	4	+1.8
Utah	All motorboats and sailboats	41,615	43,556	36	+4.7
Vermont	All motorboats	25,074	25,555	45	+1.9
Virginia	All motorboats	139,423	140,444	24	+0.7
* Washington	All motorboats	188,723[1]	172,134	20	−8.8
West Virginia	All motorboats	31,234	34,133	39	+9.3
Wisconsin	All motorboats and sailboats over 12 feet in length	384,201	404,185	6	+5.2
Wyoming	All motorboats	15,857	18,262	49	+15.2
Guam	All motorboats	707[3]	527	54	−25.5
Puerto Rico	All motorboats	17,359	18,288	48	+5.4
Virgins Islands	All motorboats	2,294	2,731	53	+19.0
* American Samoa	All motorboats	99	60	55	−39.4
N. Marianas	All motorboats	–	2	56	–
	TOTALS	8,034,905	8,278,723		+3.0

* States not having a Coast Guard approved numbering system as of 31 December 1978, and where the Coast Guard has assumed the numbering authority.

[1] Estimate

[2] Minnesota excludes (a) duckboats during duckhunting season, (b) riceboats during harvest season, and (c) seaplanes.

[3] Guam did not report their 1978 boat numbering data. The figure for 1977 was carried over.

Source: Boating Registration Statistics 1979, National Marine Manufacturers Association (Marex), Chicago, IL

JRB Associates, Inc.

TABLE A.2 PLEASURE BOATS PER ONE THOUSAND STATE POPULATION

	1979 Boats[a] Registered	1979 Estimated[b] Population (1000)	Boats per 1000 Population
NEW ENGLAND	427,135	12,290	35
Connecticut	74,266	3,115	24
Maine	117,167	1,097	107
Massachusetts	173,834	5,769	30
New Hampshire	15,334	887	17
Rhode Island	20,979	929	23
Vermont	25,555	493	52
MIDDLE ATLANTIC	1,481,082	60,949	24
Delaware	30,721	582	53
District of Columbia	3,247	656	5
Georgia	194,755	5,117	38
Maryland	132,536	4,148	32
New Jersey	114,000	7,332	16
New York	321,470	17,648	18
North Carolina	191,679	5,606	34
Pennsylvania	171,613	11,731	15
South Carolina	180,617	2,932	62
Virginia	140,444	5,197	27
GULF COAST	1,591,722	32,456	49
Alabama	180,299	3,769	48
Florida	480,953	8,860	54
Louisiana	274,778	4,018	68
Mississippi	110,313	2,429	45
Texas	545,379	13,380	41
EAST CENTRAL	734,776	16,832	44
Arkansas	226,165	2,180	104
Kentucky	110,174	3,527	31
Missouri	181,080	4,867	37
Tennessee	183,224	4,380	42
West Virginia	34,133	1,878	18

[a] Boating Registration Statistics 1979, National Marine Manufacturers Association (Marex), Chicago, IL.

[b] Statistical Abstract of the United States: 1980, 101st Edition, U.S. Bureau of the Census; Washington, D.C., 1980.

	1979 Boats[a] Registered	1979 Estimated[b] Population (1000)	Boats per 1000 Population
GREAT LAKES	2,222,263	45,347	49
Illinois	258,403	11,229	23
Indiana	164,589	5,400	30
Michigan	571,007	9,207	62
Minnesota	563,850	4,060	139
Ohio	260,229	10,731	24
Wisconsin	404,185	4,720	86
WEST COAST	874,161	29,147	30
California	562,061	22,694	25
Oregon	139,966	2,527	55
Washington	172,134	3,926	44
MIDWEST/MOUNTAINS	878,210	21,756	40
Arizona	91,510	2,450	37
Colorado	50,525	2,772	18
Idaho	58,450	905	65
Iowa	184,424	2,902	64
Kansas	76,711	2,369	32
Montana	30,776	786	39
Nebraska	41,383	1,574	26
Nevada	26,754	702	38
New Mexico	40,469	1,241	33
North Dakota	28,513	657	43
Oklahoma	162,480	2,892	56
South Dakota	24,397	689	35
Utah	43,556	1,367	32
Wyoming	18,262	450	41
NON-CONTIGUOUS	69,374	4,937	14
Alaska	34,088	406	84
Hawaii	13,678	915	15
Guam	527	114[c]	5
Puerto Rico	18,288	3,358[c]	5
Virgin Islands	2,731	96[c]	28
American Samoa	60	31[c]	2
North Marianas	2	17[c]	0.1

[c] 1978 estimated population. Data from Statistical Abstract of the United States: 1980.

APPENDIX B

ENGINEERING STATE OF THE ART

Reproduced from Bertges, W.C., "Recreational Vessel Waste Pollution," U.S. Coast Guard, NTIS, Cat. No. AD/A-000 453, 1974.

(Note: This report was prepared in 1974. While it is a good, brief overview of basic MSD technologies, it does not reflect design and performance advances that have been made in the last seven years.)

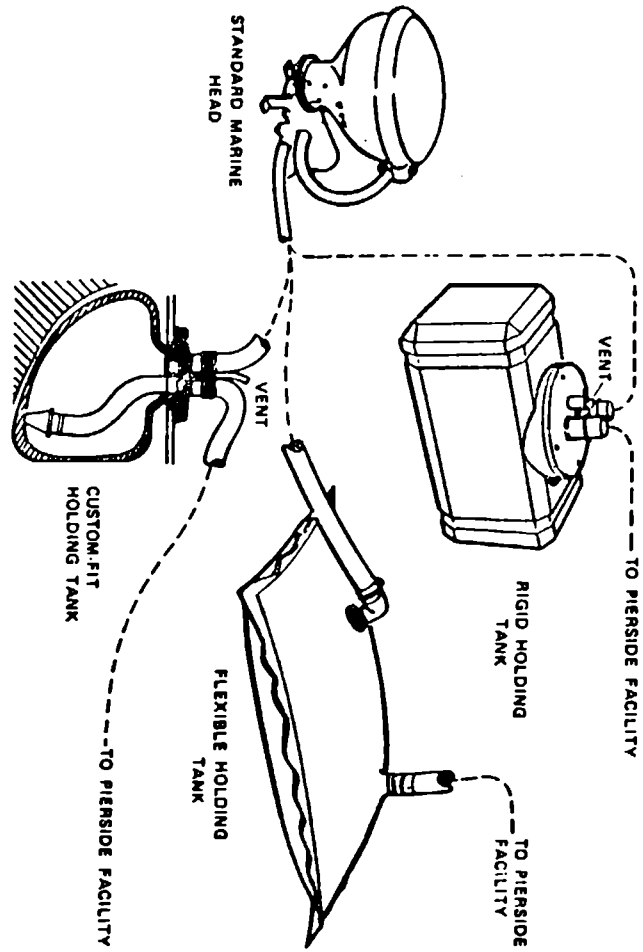

Figure 4-7. Three Holding Tank Configurations With Standard Marine Head.

4-5.1 COMMERCIAL OFF-THE-SHELF MSD EVALUATION

This section discusses the various MSD systems that are commercially available for the recreational boat. This discussion will include a description of these systems in terms of structure, operation, installation and cost.

4-5.1.1 HOLDING TANK MSD

Figure 4-7 illustrates typical small craft marine holding tank configurations. These configurations are generally referred to as Collection, Holding, and Transfer Systems (CHT).

Standard marine heads are generally constructed of vitreous china, either manually or electrically pump-operated, and weigh 23 to 160 pounds. The amount of water the pump takes on for flushing depends on the length of the pumping cycle the user allows. Generally 3/4 to 1-1/2 gallons of water per use is consumed as compared to 5 to 7 gallons in a home toilet. Vacuum marine heads use 1-1/2 pints per flush. Costs range from $67 to $680.

Upon flushing, the waste water flows into a holding tank. If the holding tank is below the head, as in most cases, gravity flow is

utilized. If the holding tank location is remote, the use of a small macerator will help prevent any clogging in the connecting line.

The holding tank represents the simplest form of retention system; the larger the holding system, the more complex it becomes. Larger holding systems utilize discharge pumps (with or without a macerator) and piping to suitable deck fittings for pumping ashore. They also incorporate a water line to flush and clean the tank, an air supply to prevent the sewage from going anaerobic, and a vent line to vent off the gases generated in the tank. Because of corrosion, the tank is separated from the vessels structure. Smaller vessels may have only a holding tank and depend on the dockside facility to provide the pumping required. In this case, they need only provide a connection between the toilet and holding tank, a vent tube, and piping to a hull-mounted fitting to provide a simple but complete system.

Typical small craft holding tank construction is rigid, often made of thermoplastic material. Another popular type is the flexible tank made of reinforced fiber material. The primary advantage of the flexible tank is its ability to fit into oddly shaped and hard-to-reach spaces. Custom-fit holding tanks are also available. In this type of holding tank, two flexible bags are used. Between these bags, a thermosetting resin is poured. Upon installing and filling the inner bag with water, the holding tank walls conform to the volume in which it has been placed. After allowing for the resin to set-up, the tank can be used as would a rigid tank. These designs are illustrated in Figure 4-7.

The capacity of most small recreational craft holding tanks is 6 to 42 gallons and cost is $39 to $200. This head-holding tank system precludes any overboard discharge. However, the tank level must be

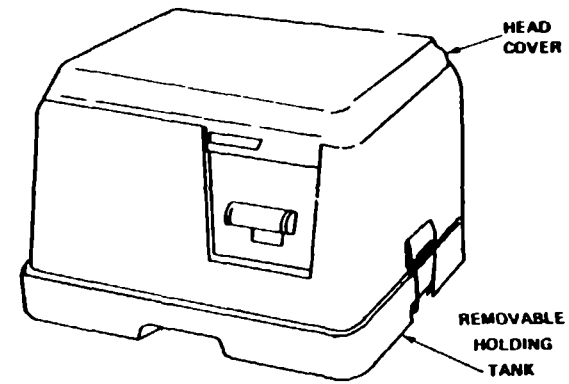

SELF-CONTAINED HEAD/HOLDING MSD [*]

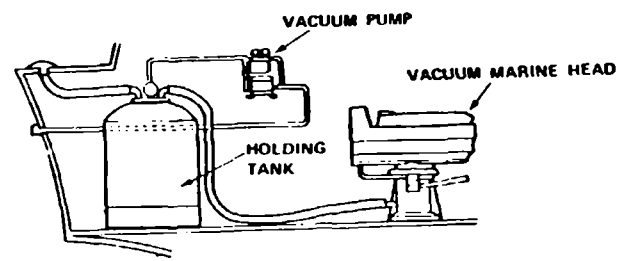

VACUUM FLUSH MSD

Figure 4-8 Self-Contained Head-Holding MSD and Vacuum Flush MSD.

[*Note that portable toilets are not defined as MSD's in accordance with the Federal regulations because they have not and cannot be certified.]

monitored to ensure against overfill and be pumped out at a shoreside facility when full. This system offers the small boat owner who already has one or more heads onboard the ability to connect the existing heads to a holding tank. However, in addition to the initial holding tank expense, the boat owner will be required to purchase fittings and hoses necessary to provide head and dockside connections. These installation costs may run to $100 or more.

Two other head-holding configurations are illustrated in Figure 4-8. The head-holding self-contained unit provides a removable holding tank directly beneath the seat of the head. Fresh flush water is also provided for in this lightweight unit whose tank can be disassembled and carried home after a weekend's use for emptying into a shore toilet. These units range in cost between $60 and $100. Biological head-holding units range in price between $300 and $500. (This system's process is described later in Section 4-5.1.4) Vacuum flush system which uses a special marine head, vacuum pump, and holding tank, use only 1 to 1-1/2 pints of water per flush. It costs between $500 and $600 for a one head system.

4-5.1.2 RECIRCULATING MSD

Unlike the holding tank system, the recirculating system does not store the liquid but recirculates it after proper treatment for use again as the flushing medium. The solids are collected and stored for later shore disposal. The larger recirculating systems provide several stages of treatment including size reduction of solids, odor and color control, settling, decomposition, and aeration. The smaller systems

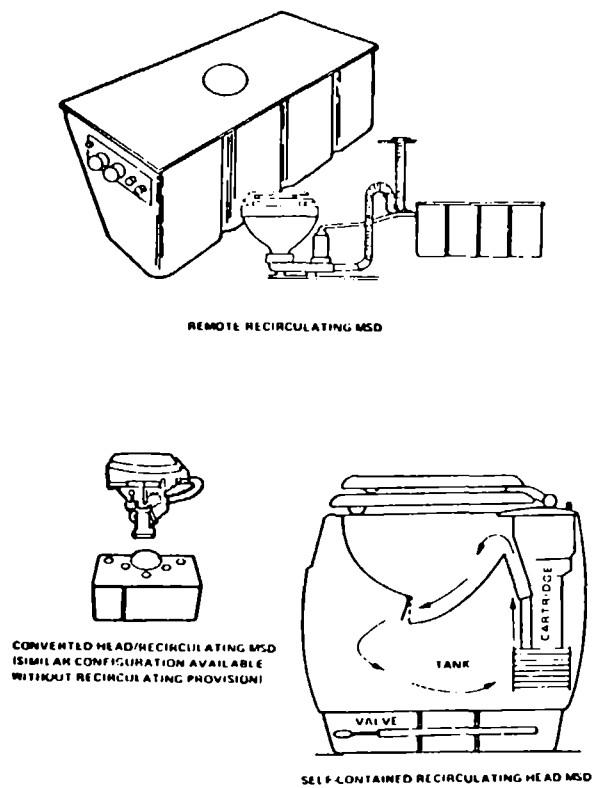

Figure 4-9. Three Recirculating MSD Configurations for Small Craft.

intended primarily for recreational and small commercial and military vessels use a simple filtering technique, e.g., a filter cartridge, and chemicals are added manually to control the odor and color of the recirculated liquid. Figure 4-9 illustrates three recirculating toilet configurations that can be used on small recreational craft.

Two of the configurations use a standard marine head, which may already be aboard the craft. In one type, the head(s) is connected to a remotely located recirculating holding tank. In the other, the recirculating tank is fitted beneath the tank, raising it only 8 to 12 inches. In this type of holding tank, a filter, such as a screen or strainer, is internally fitted between the influent discharge from the toilet and the return flushing line. The unit is initially charged with enough water for at least a single full flush. When the pump is actuated, the flushing liquid enters the bowl, cleans it, and transports the waste to the holding tank. The filtered flush liquid is chemically treated to reduce odor and improve appearance. The tank is pumped out, flushed, and recharged in the same manner as the standard holding tank. The third configuration is a self-contained head and recirculation unit. When the flush valve is actuated, the liquid in the tank circulates through a filter to screen out solids and then through a cartridge that colors and deodorizes the liquid. Instead of a cartridge, liquid or powder may be added by the batch method. All commercial aircraft are fitted with units of this type, and some 200,000 have found uses on campers, trailers, and pleasurecraft. These units are rated for 60 to 80 uses between charging, have an average cost of $300, and range from 570 to $1000. Some holding tank recirculating conversion kits are available for less than $100.

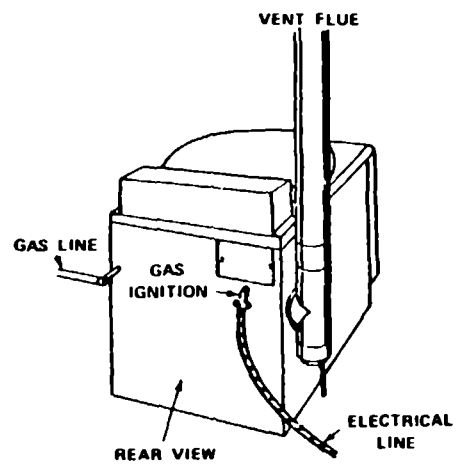

Figure 4-10. Small Craft Incinerating MSD.

4-5.1.3 INCINERATION/EVAPORATION MSD

Figure 4-10 illustrates an evaporation/incineration type MSD for small craft. In this type of self-contained MSD, flushing liquids are minimized or completely precluded. In most cases, paper bowl line s are used for the containment of each sanitary waste discharge. The means of combustion is either by fuel or electricity. In addition, an activated carbon filter may be used to deodorize the combustion gases that escape through the vent. This system requires occasional inert ash removal. This ash can be disposed of in the same manner as other onboard generated solid waste. Electrical models require the avail bility of 3600 watts of electrical power. The average units run in the $600 range.

Another type system for small craft application utilizes thermal energy to kill the coliform bacteria and concentrate the waste effluent. This system has the same weight and power requirements as the incinerating toilet. Its cost is in the $2,000 range.

4-5.1.4 BIOLOGICAL MSD

In a biological MSD, the sewage is digested by the bacteria present in the waste stream. These bacteria fall into the aerobic type (those that live in the presence of oxygen) and the anaerobic system (those that live only in the absence of free elemental oxygen). In comparison to the aerobic system, the anaerobic system (those often used for domestic sewage treatment, i.e., septic tanks) requires too great a tank size and too long a retention time to effectively digest the waste stream aboard ship. Thus, the anaerobic system's use in a marine shipboard environment

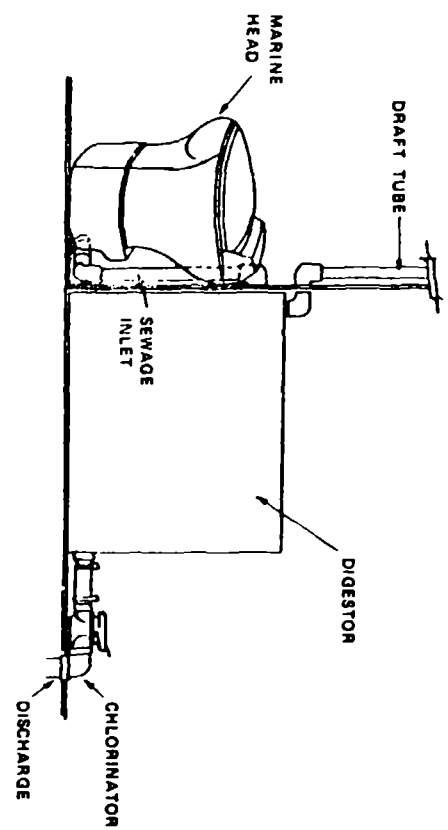

Figure 4-11 Small Craft Biological MSD System.

has generally been precluded because of space and weight shipboard constraints.

In the small craft aerobic system, the sewage and flush water are transferred to a digestion tank. The digestion tank is furnished with a vent to maintain the aerobic conditions. Bacteria-enzymes (micro-organisms) decompose the waste into liquid and carbon dioxide by means of a progressive material process of biodegradation and digestion. This reduction process is accomplished over a period of time and acts upon the retained solids and restricted flow of fluids physically, chemically, and biologically. (However, the biological growth in these systems is sensitive to some cleaning compounds, detergents, and galley greases which often find their way into the waste stream and kill the micro-organisms.) The effluent is chlorinated while being discharged. The effluent can also be recirculated for toilet flushing. One self-contained head-digestor claims to be able to accomodate the sanitary wastes of six people continuously without any overboard discharge. If the water is recirculated, the manufacturer claims it must be periodically refilled to allow for evaporation. These systems weigh 50 to 130 pounds and cost $225 to $500. An example of this system is shown in Figure 4-11.

4-5.1.5 PHYSICAL-CHEMICAL MSD

Physical-chemical MSD's are generally categorized as maceration-disinfection, electro-mechanical or coagulation, and physical-chemical systems.

For small craft, primarily the maceration-disinfection system has been used. In this system, the waste stream is flushed from the head to a macerator pump. A suction created by the macerator pump feeds a disinfecting solution or powder, usually chlorine or chlorine bleach,

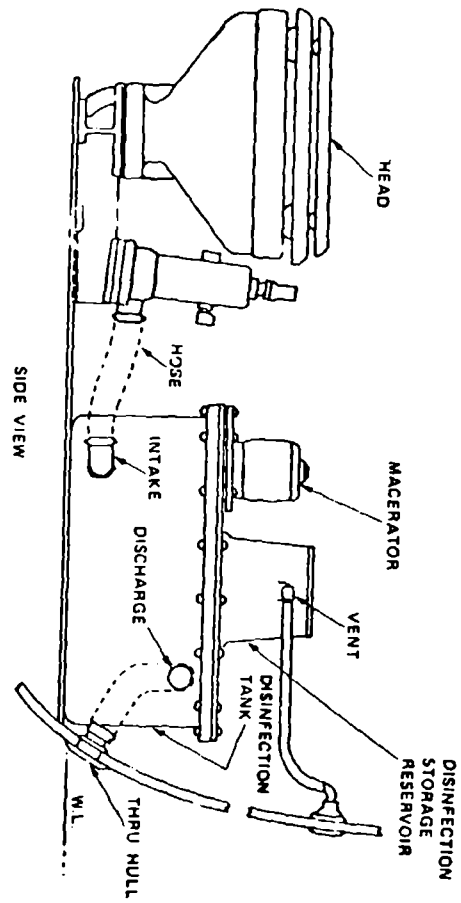

Figure 4-11. Small Craft Macerator-Disinfection, Physical-Chemical MSD.

from the disinfection storage reservoir into the disinfecting tank. The waste slurry is retained for sufficient time to come in contact with the disinfecting agent before being discharged (Figure 4-12). It is necessary to maintain a disinfection residual in order to ensure adequate coliform kill. Due to current and pending regulation, many macerator-disinfection MSD manufacturers have ceased production since their products cannot produce an effluent of proper quality consistently. These systems cost $100 to $200 and weigh 20 to 40 pounds.

A unique small craft maceration-disinfection system utilizes a patented microwave principle in the disinfection tank instead of a disinfection agent. Different from other maceration-disinfection equipment, this system filters any fine suspended particles from the sterilized liquid prior to the discharge or recirculation of the effluent. Effluent results of 50 to 0 bio-chemical oxygen demand(BOD), 50 to 0 suspended solids (SS), and less than 8 total coliform count per 100 ml have been acheived. However, this system costs $750 and requires the availability of 1000 to 1500 watts at 105 to 125 VAC, single phase. The unit weighs 75 pounds dry/150 pounds wet and fits into a 3-1/4 cubic foot space.

4-6.1 SUITABILITY OF MSD SYSTEMS

The advantages and disadvantages for those MSD systems described in the previous section are presented in this section. The advantages and disadvantages are based on current commercially available MSD systems as they apply to recreational vessels.

4-6.1.1 HOLDING TANK MSD

ADVANTAGES

(1) Manufactured in various shapes and sizes, including a flexible form configuration, to provide the required holding capacity within the space limitations of the vessel.

(2) Simple construction requires minimal maintenance.

(3) Smaller holding tanks are portable for easy offloading by the boat owner.

(4) Lowest initial cost of all MSD systems.

DISADVANTAGES

(1) There are very few shore reception facilities to discharge stored sewage.

(2) Holding tank size becomes prohibitive if the vessel is to remain at sea for more than a few days.

(3) If the tank is not properly aerated, anaerobic digestion may take place resulting in objectionable gases. The strong perfume scent of the chemical odor suppressant commonly added to the holding tank also creates a malodous problem.

(4) Low initial cost may be offset by higher pumpout and disposal service costs.

(5) Many of these devices do not have provisions to adequately flush out their solids from the holding tank after pumpout.

(6) The strong biocides often added to the holding tanks make their pumpout discharge very toxic to municipal biological treatment plants. To prevent upsetting the shoreside treatment plant, these discharges must not consist of more than a few percent of the total municipal sewage reaching the facility.

(7) Dry "flush" toilets have often been prone to mechanical failure, leaks, and odors. Disposal of the wastes into normal solid waste receptacles may be locally prohibited.

SUITABILITY

Holding tank systems are physically suitable for all types of recreational vessels, and for the most part, appear to be functionally suitable for most recreational vessels.

5-6.1.2 RECIRCULATING MSD

ADVANTAGES

(1) Extends the length of time a vessel can operate in waters where overboard discharge is prohibited as compared to holding tank systems of the same capacity.

(2) Self-contained units are more compact than holding tank systems.

(3) Some self-contained units will fit in almost the same size space as already provided for the standard marine heads.

(4) Some recirculating systems can be used in conjunction with existing marine heads.

(5) Manual models are available. Also, electric powered models can be operated from primary DC power on recreational vessels.

DISADVANTAGES

(1) Difficulty in controlling the discoloration and odor level of the recirculated liquid.

(2) For a larger system, daily maintenance is required to transfer solids to storage tanks, to test recirculated water for alkalinity level, and to resupply chemicals.

(3) Requires pumpout at shore reception facility, although not as often as with a holding tank system.

(4) Greater number of mechanical parts than holding tank systems and may require more maintenance, repair, and replacement of parts.

(5) Initial costs of recirculation systems are higher than holding tank systems. Operational costs are also estimated to be higher because of the cost of chemicals.

SUITABILITY

Recirculating systems, because they require less storage space for liquids, are more compact than holding tank systems and will generally require less space onboard the vessel, but their greatest advantage is in the fact that a vessel can operate for a longer period of time in navigable waters without returning to shore for pumpout. The odor problem may be objectionable on some vessels, but undoubtedly this problem will be eliminated by continued research and testing on these systems. The overall characteristics of recirculation systems make them well-suited for recreational vessels.

4-6.1.3 INCINERATION/EVAPORATION MSD

ADVANTAGES

(1) Incinerator systems do not require shoreside pumpout.

(2) Can accommodate greater loading without taking up more space.

(3) Utilizes less flush water than other systems.

(4) Inert ash from incineration can be easily disposed of as solid waste.

DISADVANTAGES

(1) Requires fuel oil, propane gas, natrual gas, or electric power for incineration process.

(2) Evaporation systems require shoreside pumpout.

(3) Incineration process may be a potential hazard to crew and vessel.

(4) Incomplete combustion may cause an odor problem.

(5) Initial unit costs are higher than other systems and may require additional shipboard equipment, e.g., marine generator, to provide power for incinerator. Operational cost for fuel is also relatively high.

SUITABILITY

Incineration/Evaporation systems unfortunately are the least suitable for recreational vessels since most do not have sufficient electric power to operate even the smaller incinerators. Marine generators could be installed on some recreational vessels, but the cost would be prohibitive to most boat owners. Fuel oil or propane gas could be used for incineration, but it could be extremely dangerous on a recreational vessel.

4-6.1.4 BIOLOGICAL MSD

ADVANTAGES

(1) Some systems can be connected to existing marine heads.

(2) Smaller systems for recreational vessels do not require electric power.

(3) Small systems are self-maintaining, requiring only the daily addition of a small amount of chemicals.

(4) Larger systems can produce a high quality effluent which can meet the EPA water quality standards.

DISADVANTAGES

(1) Bacteria colonies are often destroyed by the introduction of oil, acids, cleaners, etc.

(2) Large systems require considerable maintenance because of sludge buildup, the sensitivity of the bacteria colony, and the requirement for frequent cleaning to avoid objectionable odors.

(3) Effluent water quality is not constant and must be sampled or monitored frequently.

(4) Some systems are sea-state sensitive, and the biological system will not perform properly if there is much vessel motion.

SUITABILITY

The smaller (nonflow-through) systems may be suitable for recreational vessels provided they are properly vented.

4-6.1.5 PHYSICAL-CHEMICAL MSD

ADVANTAGES

(1) Some systems can be combined with standard marine heads.

(2) System can operate with salt or fresh water flushing.

(3) Steady loading is not required.

DISADVANTAGES

(1) Water quality effluent may be inconsistent.

(2) High residual chlorine level (required in order to attain adequate coliform bacteria kill) is a pollutant.

(3) May require considerable maintenance time.

(4) May generate objectionable odors.

SUITABILITY

Only the smaller systems that macerate and disinfect the sewage for storage and discahrge are suitable for the recreational vessel. However, most of these systems were designed as flow-through devices, and as such, will offer no advantage over the other systems if the effluent is not discharged overboard but retained in holding tanks.

APPENDIX C

METHODOLOGY TO DETERMINE THE TOTAL COST OF THE FEDERAL MSD REGULATION

APPENDIX C

METHODOLOGY TO DETERMINE THE TOTAL COST OF THE FEDERAL MSD REGULATION

The cost of Federal MSD regulation includes the unit purchase price, installation, and annual costs necessary to operate and maintain marine sanitation devices. This analysis calculates the total compliance costs by determining the number of boats in various size classifications that will be affected by the regulations. Only vessels with toilets that have not complied with MSD regulations prior to January 1977 (the effective date of the Federal MSD regulation) and vessels that have been built since January 1977 are considered in the analysis. The methodology used to calculate total cost (TC) is as follows:

(1) Calculate the number of existing boats that were not in compliance with MSD regulations prior to January 1977 (EB);

(2) Calculate the number of boats with heads that were retired (RB) due to age, deterioration, accidents, etc. over the 1977-1979 period;

Calculate the number of boats that were manufactured with toilets installed (NB) over the 1977-1979 period;

(3) Calculate the total number of boats (TB) that were required to install MSD's over the 1977-1979 period:

$$TB = EB + NB - RB;$$

(4) Calculate the total compliance costs per boat (CB);

(5) Calculate the costs of the Federal MSD regulation if all affected boats had complied (TC); and

(6) Evaluate precision of methodology and calculations. [1]

Application of the above methodology, including step 6, resulted in calculation of upper and lower bound estimates for factors related to the number of boats affected (impacted) by current Federal MSD regulations. The upper and lower bound approach was deemed necessary because two key parameters could not be satisfactorily estimated. These parameters are: (1) the proportion of boats with installed toilets that would be converted to portable toilets only; and (2) the proportion of boats not in compliance (by virtue of existing State

[1] The decision to use this methodology was made after a close review of previous studies including the 1967 report to the Congress, "Wastes from Watercraft" (110).

programs) with Federal regulations when they first became effective in January 1977. Where these parameters impact calculations, two numbers (a high and a low value) appear in the related table cells.

The techniques used to calculate each of the components is set out below. Table C.1 provides some useful aggregate background statistics on registered power boats by size class and over time. Actual statistics utilized for calculation purposes frequently involved more disaggregated statistics (e.g., by state and size class). These more detailed statistics and associated calculations are available on request.

C.1 CALCULATE THE NUMBER OF BOATS NOT IN COMPLIANCE WITH MSD REGULATIONS PRIOR TO JANUARY 1977 (EB)

The determination of the number of boats not in compliance with MSD regulations is based on a 1976 market analysis performed by Mansfield Sanitary, Inc. Boat registration data were used as the best estimate of the total number of recreational vessels (inboard and outboard) in each State.[1/] The initial calculations were performed at the State level by size class according to the methodology outlined in Figure C.1, and then size class totals were summed for a national estimate of the number of boats not in compliance with MSD regulations. The following steps were used in the calculations:

- State boat registration statistics for the end of year (1976) were acquired for use as the base data
- The total number of boats with toilets was calculated by multiplying the number of registered boats by the toilet factor associated with boats of various size classifications
- Estimates of the number of boats in compliance were calculated
- Estimates of the number of boats not in compliance in January of 1977 were calculated (EB).

C.2 CALCULATE THE NUMBER OF BOATS WITH TOILETS BUILT AFTER 1977 (NB) AND BOAT ATTRITION OVER THE 1977 TO 1979 PERIOD (RB)

The number of boats with toilets that were built after January 1977 and are less than 65 feet in length are determined as follows:

[1/] Boat Registration Statistics 1979, National Marine Manufacturers Association (Marex), Chicago, IL.

TABLE C.1

TOTAL REGISTERED CRAFT BY LENGTH - 5 YEARS*

Length	1975	1976	1977	1978	1979	1979 %
16'-26	2,087,557	2,216,829	2,482,065	2,597,548	2,699,468	3.5%
26-40'	178,812	185,721	198,057	207,032	213,649	3
40'-65'	20,966	21,630	24,407	26,823	27,478	-
Total 16'-65'	2,287,335	2,424,180	2,704,529	2,831,403	2,940,595	38
Change	-	136,845	280,449	126,874	109,192	49
% Change	-	6%	12%	5%	4%	133
Under 16'	4,360,235	4,347,934	4,742,486	4,663,772	4,775,283	62
Over 65'	1,104	1,351	1,526	1,728	1,855	-
16'and 65'	4,361,339	4,349,285	4,477,012	4,665,500	4,777,138	62
Change	-	(12,054)	394,727	(78,512)	111,638	51
% Change	-	-	9%	(2%)	2%	67
Total Boats	6,648,674	6,773,465	7,448,541	7,496,903	7,717,733	100
Change	-	124,791	675,076	48,362	220,830	100
% Change	-	2%	10%	1%	3%	100

Source: Adapted from National Marine Manufacturers Association, Boating Registration Statistics, 1979, Table IV, page 8.

( ) = negative number

*Includes inboard and outboard motor boats only. These numbers exclude boats without engines, but most of these are not of interest for purposes of current MSD regulations.

FIGURE C.1. OVERVIEW OF METHODOLOGY TO DETERMINE BOATS NOT IN COMPLIANCE WITH MSD REGULATIONS PRIOR TO JANUARY 1977

Class/Size	# Registered Boats[a]	Toilet Factors	# Boats with Toilets	State Compliance Factor[c]	# Boats Complied/ Noncomplied
I (16'-26') :	_____	X 0.228[b], X.0.200[b'] = 0.0456	_____	X CF	= _____
				X NCF	= _____
II (26'-40') :	_____	X 0.830[b], X 0.800[b'] = 0.664	_____	X CF	= _____
				X NCF	= _____
III (40'-64') :	_____	X 0.823[b]	_____	X CF	= _____
				X NCF	= _____

[a] Total number of inboard and outboard boats registered by the various states. Boating Registration Statistics, 1979, National Marine Manufacturers Association (Marex), Chicago, IL.

[b] Percent of the total number of registered boats in each size class which have permanent toilet facilities. The toilet factor is based on data presented in Bertges, W.C., Recreational Vessel Waste Pollution, U.S. Coast Guard, NTIS #AD/A-000-453, June, 1974.

[b'] The assumption that 80 to 20 percent of the Class I and II boats with toilets would avoid the Regulation by installing portable toilets (portable percentage conversion factors) were provided by an industry representative.

[c] CF = Compliance Factor (i.e., percent of boats estimated to be in compliance with State discharge regulations). Compliance factors were obtained from a 1976 market analysis by Mansfield Sanitary, Inc.

NCF = Compliance Factor (i.e., percent of boats estimated to be in noncompliance with State discharge regulations) prior to 1977 = 1.00 - CF.

- Compute the total number of boats (TNB) sold over the 1977-1979 period[1/]

- Calculate the change in the boat stock (ΔBS) over the 1977-1979 period, i.e., the difference between the number of registered boats in 1979 and 1976.[2/]

- Calculate the attrition rate (AR) or the rate at which boats were retired over the 1977-1979 period. By definition, the change in the boat stock (ΔBS) is the total number of new boats minus the number of boats retired:

$$\Delta BS = TNB - (AR \times EB)$$

where

TNB = the total number of boats sold over the 1977-1979 period, and

EB = the number of registered boats at the end of 1976.[1/]

$$\therefore AR = \frac{TNB - \Delta BS}{EB}$$

- Calculate the number of boats with toilets <u>in the various size classes</u> that are lost through attrition over the period. This is equal to the number of boats with toilets <u>by size class</u> "i" existing at the end of 1976 (EB_i) that have not complied multiplied by the attrition rate, i.e.:

$$RB_i = AR \times EB_i$$

$$RB = AR \sum_{i=1}^{3} EB_i$$

- Calculate the number of boats with toilets (NB) by size class built after 1977, assuming the attrition rate (AR) to be constant over vessels of different sizes. The number of boats with toilets built after 1977 is equal to the change in the stock of boats with toilets (ΔBS) plus the number of boats with toilets lost through attrition

$$NB_i = \Delta BS_i + (AR \times EB_i)$$

[1/] The annual sales of boats over the 1977-1979 period were obtained from a publication called <u>Boat and Motor Dealer</u>, Statistics and Research Department, December 1979.

[2/] See Table C.1. The numeric attrition rate determined over the three year period was 0.045.

$$NB = \sum_{i=1}^{3} \Delta BS_i + RB$$

C.3 CALCULATE THE TOTAL NUMBER OF BOATS REQUIRED TO COMPLY WITH THE FEDERAL REGULATION (TB)

Table C.2 below provides the results and summarizes the steps taken to calculate the total number of boats required to comply with the Federal MSD regulation.

$$TB = EB + NB - RB$$

C.4 CALCULATE THE TOTAL COMPLIANCE COST PER BOAT (CB)

The average compliance cost per boat is equal to the average total investment for purchase and installation and the annual costs necessary to operate and maintain the device in the average boat. The data used to determine these costs were derived from industry statistics and from primary data obtained from marinas in the Washington, D.C. area. Data include the average purchase prices of typical Type I MSDs, labor rates, and the costs of materials used to install MSDs. Information on the purchase price of three common MSDs and their labor rates are provided in Table C.3. The costs for materials used to install MSDs are shown in Table C.4.

Using the data provided above, the average total investment compliance cost per boat was computed. It is estimated that the investment cost per boat between 16' - 40' would be approximately $800. Generally, larger boats have more than one toilet and therefore would require a larger investment. The average investment cost of a boat between 40' - 65' in length was computed to be approximately $1,400. This figure was computed by multiplying $800 by the average number of toilets in boats of that size class.[1/] The data on the Type II MSD are based on a similar analysis of the average selling prices and installation costs of these devices. Annual operating and maintenance costs are based on discussions with an industry marketing representative. It is

---

[1/] A boat in the 40' - 65' size class is estimated to have an average of 1.75 toilets, based on conversations with government and other personnel knowledgeable in the area.

TABLE C.2

ANALYSIS OF THE NUMBER OF BOATS REQUIRED
TO COMPLY WITH FEDERAL MSD REGULATIONS

Boat Size Class	No. of Boats with toilets prior to 1977 (EB)	No. of Boats with toilets built 1977 - 1979 (NB)	No. of Boats Lost Through Attrition 1977-1979 (RB)	Total No. of Boats with Toilets (TB)
16' - 26'*	47,627 238,133	24,172 120,862	2,164 10,819	69,635 348,176
26' - 40'*	77,242 96,553	22,054 27,567	3,510 4,387	95,786 119,733
40' - 65'	10,409	5,299	473	15,235
TOTAL BOATS *	135,278 345,095	51,525 153,728	6,147 15,679	180,656 483,144

*Refer to page C-1 for an explanation of the upper and lower bound estimates in the cells of these rows.

TABLE C.3

AVERAGE MSDs COSTS AND MARINA'S LABOR RATES FOR TYPE I MSD

MARINA	TDX	TDX-S	LECTRA-SAN	LABOR RATES (PER HOUR)
Anacostia Marina	$ 600	$ 500	$ 595	$ 18
Anchor Yacht Basin Inc.	550	500	500	20
Hartage Yacht	500	500	500	25
Port Annapolis Yacht*	1000	1000	1000	--
Washington Marina Co.	595	499	495	N/A

*Total investment cost per boat. These costs include the price of the MSD and installation charges.

TABLE C.4

AVERAGE COSTS OF INSTALLATION

ITEMS	COSTS
Labor	$ 160
Hoses	45
Y Valve	30
Other materials	30
Total	$ 265

assumed that boats containing Type III devices will be required to pumpout their tank at least eight times a year, and the cost of each pump-out would be $4.00. (Actual pump-out costs are understood to range from $0.25 to $10 or more.)

C.5 CALCULATE THE TOTAL COMPLIANCE COSTS OF THE FEDERAL MSD REGULATION

The total compliance costs of the Federal MSD regulation are calculated by further disaggregating the number of boats according to the specific MSD regulations of the states. These State MSD regulations fall into two categories: (1) states which allow discharges from watercraft, and (2) states which do not allow discharges from watercraft. The number of boats in each category is shown in Table C.5. These results are based on the number of boats in each state and the 1976 status of the State laws (shown in Table C.6). The results in the last two columns of Table C.5 (i.e., the total number of boats in no-discharge and treatment/discharge areas) are then multiplied by the appropriate device investment cost and two years of annual compliance cost to determine the total costs of the Federal MSD regulation.

The information used to compute the costs of the policy alternatives are the total number of boats affected by the regulation, boats built over the 1977-1979 period, and the per-unit investment and annual costs of the specific MSDs that correspond to the regulation.

C.6 PRECISION OF METHODOLOGY AND CALCULATIONS

The high and low estimates of number of boats affected by Federal regulations presented in Table C.2 and C.5 vary depending only on whether or not the portable percentage conversion factors (b' of Figure C.1) are applied. The initial calculations for draft versions of this report did not include these conversion factors and therefore resulted in the high estimates shown. Review of draft reports suggested that the conversion of boats with installed toilets to portable facilities only (thus avoiding the regulations) was a phenomenon that had to be accounted for, but no agreement or data exist on the extent to

TABLE C.5

ANALYSIS OF BOATS THAT NEED TO COMPLY WITH FEDERAL REGULATIONS BY DISCHARGE AND NO DISCHARGE AREAS PRIOR TO 30 JANUARY 1980

SIZE CLASS	# Boats Not in Compliance Prior to 1977		# Boats Built 1977-1979		# Boats Lost Through Attrition (1977-79)		Total Number of Boats Needed to Comply Prior to Jan. 30, 1980	
	No Disc. State	Treat/ Disc. State	No Disc. State	Treat/ Disc. State	No Disc. State	Treat/ Disc. State	No Disc. State	Treat/ Disc. State
16' - 26' *	14,891	32,736	7,557	16,615	677	1,487	21,771	47,864
	74,452	163,681	37,787	83,075	3,383	7,437	108,856	239,319
26' - 40' *	18,515	58,727	5,287	16,767	842	2,668	22,960	72,826
	23,144	73,409	6,608	20,959	1,052	3,335	28,700	91,033
40' - 65'	2,598	7,811	1,323	3,976	118	355	3,803	11,432
TOTAL BOATS *	36,004	99,274	14,167	37,358	1,637	4,510	48,534	132,122
	100,194	244,901	45,718	108,010	11,127	11,127	141,359	341,784

*Refer to page C-1 for an explanation of the upper and lower bound estimates in the cells of these rows.

TABLE C.6

BOATS IN COMPLIANCE BY STATE 1976

State	Discharge Regulation	State Compliance Factor % Boats Complied	State Compliance Factor % Boats Noncomplied
Ala.	Treated Discharge	50	50
Alaska	No Law	10	90
Ariz.	No Discharge	90	10
Ark.	Treated Discharge	90	10
Calif.	No Discharge	25	75
Col.	No Discharge	90	10
Conn.	No Law	10	90
Del.	No Law	10	90
D.C.	No Law	10	90
Fla.	No Law	10	90
Ga.	Treated Discharge	90	10
Hawaii	Treated Discharge	50	50
Idaho	No Law	10	90
Ill.	No Discharge	90	10
Ind.	Treated Discharge	90	10
Iowa	No Law	10	90
Kansas	Treated Discharge	90	10
Ken.	Treated Discharge	90	10
La.	Treated Discharge	50	50
Maine	No Law	20	80
Md.	Treated Discharge	50	50
Mass.	No Law	10	90
Mich.	No Discharge	90	10
Minn.	No Discharge	90	10
Miss.	No Law	10	90
Mo.	No Discharge	70	30
Mont.	Treated Discharge	50	50
Neb.	Treated Discharge	90	10
Nev.	Treated Discharge	80	20
New Hamp.	No Discharge	90	10
N.J.	No Law	20	80
N.M.	No Discharge	10	90
N.Y.	No Discharge	60	40
N.C.	Treated Discharge	90	10
N.C.	Treated Discharge	80	20
Ohio	No Discharge	70	30
Okla.	Treated Discharge	80	20
Ore.	Treated Discharge	80	20
Penn.	No Law	10	90
R.I.	No Law	10	90
S.C.	No Law	10	90

TABLE C.6 (continued)

State	Discharge Regulation	State Compliance Factor % Boats Complied	State Compliance Factor % Boats Noncomplied
S.D.	Treated Discharge	90	10
Tenn.	Treated Discharge	80	20
Texas	No Discharge	50	50
Utah	Treated Discharge	50	50
Ver.	No Discharge	90	10
Va.	No Law	10	90
Wash.	No Law	10	90
West Va.	No Law	10	90
Wisc.	No Discharge	90	10
Wyoming	No Law	10	90

Adapted from Mansfield Sanitary, Inc., Market Analysis (1976), as revised by data from Exhibit C.1 after consultation with the authors. Original Mansfield Sanitary table was based on judgment exercise after a review of relevant laws and other factors.

EXHIBIT C.1

SUMMARY OF STATE LAWS GOVERNING WATERCRAFT WASTE DISPOSAL

(Reprinted with permission of The Boating Industry Associations)

KINDS OF RESTRICTIONS: TOILET MAY BE USED PROVIDED IT IS EQUIPPED WITH—

STATE	RESTRICTIONS ON BOAT TOILET EFFLUENT DISPOSAL YES	NO	Toilet must be sealed or rendered inoperable, if it permits overboard discharge	Tank that retains waste for shoreside disposal	Incinerator	Device that properly treats effluent before discharge into water	STATE APPROVAL REQUIRED FOR BOAT TOILET POLLUTION CONTROL DEVICES YES	NO	STATE AGENCY IN CHARGE OF APPROVALS
ALABAMA	X			X	X	X	X		State Board of Health & Dir. of Conservation Montgomery, Alabama
ARIZONA	X		X	X			X		State Dept of Health, Phoenix, AZ
ARKANSAS	X			X	X	X	X		Bureau of Environmental Engineering, State Board of Health, Little Rock, AK
CALIFORNIA(1)	X			(2)				X	
COLORADO	X		X	X				X	
CONNECTICUT(3)	X							X	
GEORGIA	X			X		X	X		Water Quality Control Board 47 Trinity Ave, S.W. Atlanta, Georgia
HAWAII	X			X	X	X	None approved		Department of Health Honolulu, Hawaii
ILLINOIS	X		X	X	X	Except macerator chlorinator not permitted		X	
INDIANA	X			X	X	X	X		Stream Pollution Control Board, Indianapolis, Ind.
KANSAS	X			Not to be enforced until State Health Dept. determines there are adequate statewide pumpout facilities				X	
KENTUCKY	X		X	X	X	X	X		Water Pollution Control Comm., Frankfort, Kentucky
LOUISIANA	X			X	X	Extended Aeration +C/2		Although evidence of performance required	
MAINE	X			On inland waters				X	
MARYLAND	Prohibits discharge of sewage from vessels while moored, berthed or docked in state waters except through a federally approved marine sanitation device.							Not effective until federal law takes effect.	
MASSACHUSETTS(4)	X						X		
MICHIGAN	X			X(5)	X			X	
MINNESOTA	X			X	X	Permitted until '76 on boats having treatment devices prior to 6/7/71	X		Water Pollution Control Comm. State Board of Health St. Paul, Minnesota
MISSOURI(6)	X			X(7)	X	X(8)	X		Water Pollution Board State Dept. of Public Health, Jefferson City, MO
MONTANA	X			X	X	X		X	
NEBRASKA	X			X	X	X		X	
NEVADA	X			On certain waters	On certain waters	On certain waters		X	
NEW HAMPSHIRE	X			X(9)					
NEW JERSEY	X		On certain lakes					X	
NEW MEXICO	X			On state park waters				X	
NEW YORK	X		X	X(10)	X		X		Dept. of Environmental Conservation, Albany, N.Y.
NORTH CAROLINA	X			On inland fishing waters	On inland fishing waters	On inland fishing waters	X		Sanitary Engineering Div. State Board of Health Raleigh, N.C.
NORTH DAKOTA	X			X	X	X	X		State Dept. of Health Bismarck, North Dakota
OHIO	X			X			X		State EPA, Columbus, OH
OKLAHOMA	X		On certain public reservoirs	On certain public reservoirs	On certain public reservoirs	On certain public reservoirs	X		State Dept. of Health 3400 N. Eastern Oklahoma City, Oklahoma
OREGON	X		On certain lakes	When shoreside servicing capability is established			None approved yet		State Sanitary Authority State Board of Health Salem, Oregon
SOUTH CAROLINA(11)	X							X	
SOUTH DAKOTA	X			X	X	X	X		State Health Dept. Pierre, S.D.
TENNESSEE	X			X	X	X	X		Stream Pollution Board Dept. of Public Health Nashville, Tenn.
TEXAS	X		Other devices are acceptable locally provided local health authority consults with State Board of Health	X				X	
UTAH	X			X			X		State Dept. of Health Salt Lake City, UT
VERMONT	X			X(12)		X		X	
VIRGINIA(13)	X			X	X	OK, provided installed prior to 3/1/73 and meets federal standards	X		Water Control Board Richmond, VA
WISCONSIN	X			X	X			X	
WYOMING(14)		X						X	

FOOTNOTES: (1) In the interest of uniformity, State requirements are the same as Federal. Until Federal preemption local governments retain the right to prohibit discharge into waters within their jurisdiction. (2) The Federal EPA has approved no discharge applications for upper and lower Newport Bays, Sunset Bay inland of the Pacific Coast Highway bridge, and Huntington Harbor. (3) The discharge of raw sewage, garbage, rubbish or debris from motorboats or vessels into waters of the state is prohibited. (4) A 1970 law provides for the adoption of regulations to control or prevent the discharge of sewage, garbage or other waste material from watercraft. There is no direction as to what kind of regulations these should be, although it would appear from other legislation adopted at the same time requiring marinas to be licensed by the Division of Water Pollution Control and to provide pump-out facilities for vessel holding tanks that the legislators lean toward total retention and shoreside disposal. To date, the law has not been implemented. In fact, the effective date has already been postponed once, to May 15, 1972, and now there is legislation pending to put it off for another two years. (5) The Federal EPA has approved a statewide no discharge application. This encompasses the Great Lakes, their connecting waterways and all inland lakes. (6) Does not apply to boats engaged in interstate commerce on the Missouri and Mississippi rivers. (7) The Federal EPA has approved a no discharge application for all waters of the state except the Mississippi and Missouri rivers and a major portion of Bull Shoals Lake along the Missouri-Arkansas border. (8) Refer to (7). (9) The Federal EPA has approved a no discharge application for inland waters of the state. (10) The Federal EPA has approved a no discharge application for Lake George. (11) Vessels with eating and sleeping facilities operated on inland lakes are required to have toilet facilities of a type approved by the State Board of Health. (12) The Federal EPA has approved a no discharge application for waters of this state including Lake Champlain and Lake Memphremagog. (13) Sewage treatment facilities aboard out-of-state or foreign vessels are acceptable if approved by the appropriate agency in the vessel's home jurisdiction. (14) There is no state law governing sewage disposal from boats, but one or two towns, in cooperation with the State Health Dept., have established regulations against discharge into their waters. **NOTE: Only those states with restrictions are included in this listing. For a complete summary, contact the BIA.**

Source: Marketing Bulletin from Thetford Corporation.

Reproduced from best available copy.

which conversions occur. The factors utilized to determine the low estimates shown in Tables C.2 and C.5 (80% for 16' - 26' boats and 20% for 26' - 40' boats) represents maximum conversion rates. However, most knowledgeable reviewers believe the 80% rate to be too high.

Review of draft reports also raised questions about the adequacy of State level compliance rates in 1976 (Table C.6). The consensus was that the rates appeared too high overall. These rates average (weighted) just under 50%, but many people believe current compliance is only 25%. Again, no nationally projectable data could be located.

For these reasons and because of the more general problem of limited data availability necessitating a corresponding large number of assumptions, it was desirable to identify a separate, independent basis for judging the reasonableness of the final estimation of number of boats affected by MSD regulations. A recent study by the State of Oregon provides such a basis. The raw data provided by Oregon is presented in Exhibit C.2; a more structured presentation of the same data is contained in Exhibit C.3. No breakdown of the data by boat length could be obtained in time for this report. Neither was any information available on whether or not the Oregon data were adjusted for nonresponse bias. Finally, no assumptions can be made with respect to representativeness of the survey for purposes of national level estimation. In spite of these limitations, some comparisons and an observation are useful.

- In Table C.2 it was estimated that between 181,000 and 483,000 boats, that either did not exist in 1976 or did not have MSDs, should have had approved MSDs by January 1980. Using the Oregon figure of 7% of total (all lengths registered) boats and the 7,717,733 total U.S. registered power boats in 1979 from Table C.1, it can be estimated that 540,000 boats were subject to MSD regulation. If it is assumed that 50% were in compliance by the end of 1976, then approximately 270,000 boats would have been impacted by MSD regulations. This number is 50% higher than the 181,000 figure from Table C.2. Taking into account that the 50% 1976 compliance rate may be high, it is conceivable that rather than 181,000 affected boats, the number could be as high as 300,000 to 400,000.

VICTOR ATIYEH
GOVERNOR

State Marine Board
OFFICE OF THE DIRECTOR
3000 MARKET ST. N.E., No. 505, SALEM, OREGON 97310 PHONE 378-8587

March 17, 1981

Ms. Nina Bunin
JRB Associates
8400 W. Park Drive
McClean, Virginia 22102

Dear Ms. Bunin:

I am writing in response to your telephone interview last week concerning Marine Sanitation Devices (MSD's) and the E.P.A./Coast Guard rules governing them. As promised, I am enclosing a copy of our Administrative Rules which required "no discharge" at several inland lakes. The rule is superseded now that the E.P.A./Coast Guard rules prohibit discharge on all non-navigable inland waters.

Preliminary data from our boat owner survey are now available. I'll try to summarize the most pertinent information concerning MSD's.

We sampled 12,613 boats from a population of 136,827. The response rate was 46% or 5,850 responses. Based on the sample, we estimate that 74% of all boats have no installed toilet, while 19.4% or 26,500 vessels have some type of toilet. The non-response balance (6.6%) are assummed to have no toilet since they are primarily under 15 feet in length.

Of vessels with toilet equipment, 63% (16,695 boats) had a portable toilet which would not be governed by the MSD regulations. Of the remaining vessels, 13% admitted direct discharge (3,445 boats), 12% used a holding tank (3,180 boats), and 11% had some type of MSD treatment (2,915 boats).

Of the 2,915 vessels responding that they had MSD treatment, 54% used a Type I, 32% a Type II, 9.0% a Type III and the remaining 5% claimed "some other" (whatever that is).

Several questions were asked to solicit information on the use of holding tanks. 74% used odor suppression chemicals in their tanks. The overall average cost of a pumpout was $1.00 when persons who did not pay were averaged in, but $2.40 for those persons who always paid.

Frequency of pumpout was also asked. 16% pumped after each days use, 19% after several days use, and 65% were irregularly pumped.

Perhaps most interesting was the fact that the majority of persons with holding tanks (58%) used an on-board pump, the balance (42%) used a shoreside pumpout. The probable disposition of waste from on-board

EXHIBIT C.2 (continued)

pumps very likely defeats the intent of a holding tank. The two greatest problems mentioned with shoreside pumpouts were non-availability (44%) and frequent closure or inoperability (20%).

Ultimately this data will be contained in our Statewide Vessel Sanitation Plan being prepared under an E.P.A. 208 non-point source planning grant. Completion is expected late this summer.

As discussed by phone, I would like to request a copy of your final report to E.P.A. If you cannot furnish it, please forward me the name of someone at E.P.A. from whom it can be requested.

If you need a clarification of the above survey data, feel free to contact me. I hope you find it useful.

Sincerely,

Paul Donheffner

Paul Donheffner, Supervisor
Waterway Planning & Development

PD:krb

Enclosure

EXHIBIT C.3

SUMMARY OF OREGON SURVEY DATA

	Number	% Total	% Sample	% Covered By MSD Reg.
Total	136,827	100.0%	-	
Sample	12,613	9.2%	100%	
Response	5,850	4.3%	46%	
Statewide Estimates				
No toilet	101,252	74.0%		
"non-response balance" (under 15' = no toilet)	9,031	6.6%		
Total no toilet	110,283	80.6%		
Portable Toilets	16,695	12.2%		
Total outside MSD regs.	126,978	92.8%		
Vessels with installed toilets[a]	9,849	7.2%		100%
Direct discharge (no treatment)[b]	3,445	2.5%		35%
Holding tanks[c]	3,180	2.3%		32%
Some type of MSD treatment[d]	2,915	2.1%		30%

a,b,c,d,: Note that there appears to be about a 300 unit rounding error; i.e., "a" should equal the sum of b + c + d.

- Where we have used a $4.00 pumpout charge, the Oregon data suggests that $2.40 might be more reasonable.

- Where an 80% compliance rate for Oregon in 1976 had been estimated (Table C.6), actual compliance is only currently at roughly 65% (for these purposes, boats with holding tanks were counted as in compliance).

- The use of an onboard pump by 48% of holding tank owners suggests routine violation of discharge regulations may be common.

On balance, the total number of boats affected by Federal regulations is estimated to be in the range of 200,000 to 500,000. To the extent that a point estimate is necessary, 350,000 boats is the most likely number that can be identified with available data. To refine these estimates would require a substantial primary data collection effort and, in fact, may not be possible because necessary 1976 compliance data may never have been recorded. Furthermore, given a total population of boats in the range of 8 to 11 million (depending on how boats are counted), estimates of boats affected by Federal MSD regulations at a level of precision of $\pm$ 150,000 is relatively precise and should be adequate for policy purposes.

APPENDIX D

CURRENT FEDERAL MSD REGULATIONS

federal register

THURSDAY, JANUARY 30, 1975

WASHINGTON, D.C.

Volume 40 ■ Number 21

PART III

DEPARTMENT OF TRANSPORTATION

Coast Guard

■

MARINE SANITATION DEVICES

Certification Procedures and Design and Construction Requirements

JRB Associates, Inc.

Title 33—Navigation and Navigable Waters

CHAPTER I—COAST GUARD, DEPARTMENT OF TRANSPORTATION

[CGD 73-83]

PART 159—MARINE SANITATION DEVICES

These regulations establish certification procedures and design and construction requirements for marine sanitation devices. The regulations apply to vessel owners, manufacturers of vessels, and manufacturers of marine sanitation devices (MSD's).

Interested parties were notified of the opportunity to participate in this rule making proceeding by the notice of proposed rule making published in the FEDERAL REGISTER of March 1, 1974 (39 FR 8038). Over 280 comments were received and a public hearing was held in Washington, D.C., on May 1, 1974. Statements made at the public hearing and all written comments received were considered by the Coast Guard in promulgating these regulations. Except as noted and discussed in the following paragraphs, the regulations as proposed have been adopted without substantive changes.

Comments were received requesting that promulgation of final regulations be delayed. Issuance of these regulations is necessary to give effect to the purposes and goals of the Federal Water Pollution Control Act (FWPCA). The purpose of section 312 of FWPCA is to prevent the discharge of untreated or inadequately treated sewage from vessels into or upon United States waters. The use of marine sanitation devices that operate in compliance with the Environmental Protection Agency (EPA) discharge standards will accomplish this purpose and thus further the national goal stated in section 101 of FWPCA to eliminate the discharge of pollutants into United States waters by 1985.

Several comments on the Notice of Proposed Rule Making recommended that the Coast Guard waive the applicability of the EPA no-discharge standard for marine sanitation devices used on recreational craft. Some comments also urged that the Coast Guard waive the applicability of the EPA discharge criteria in 40 CFR 140.3(c) for discharge treatment devices used on recreational craft. Most of the latter comments suggested that large commercial vessels are the primary source of sewage discharge into United States waters. Section 312(c)(2) of FWPCA authorizes the Coast Guard after consultation with the EPA to waive the applicability of EPA standards whenever necessary or appropriate for "classes, types, and sizes of vessels * * *." After consideration of these comments, the Coast Guard has concluded that the class of recreational craft is so broad, that a waiver of EPA discharge standards for these vessels would be inappropriate. The waiver would apply to such large number of vessels that the purpose of section 312 of FWPCA to prevent the discharge of untreated and inadequately treated sewage from vessels into United States waters would not be accomplished.

Several comments were received questioning the legality and appropriateness of the EPA no-discharge standard regardless of class or type. One of these comments noted that if a no-discharge standard is imposed, adequate pump out facilities should be required or a waiver from compliance with the standard should be granted under section 312(c)(2) of FWPCA. The Coast Guard has no authority to require that pump out facilities be established. However, requests for waivers under section 312(c)(2) will be fully considered.

Over 150 comments were received concerning EPA's discharge standards in 40 CFR 140(c). Review of these comments by both the Coast Guard and EPA resulted in the formation of a joint working group tasked with reassessing the existing no-discharge standard. The working group upon completion of their reassessment recommended to the Administrator of EPA that the Standard (40 CFR 140) be revised to permit the installation of certified flow through devices which provide adequate treatment on both new and existing vessels. While existing vessels are permitted to install flow through devices in accordance with the 3-year incentive provision of the existing Standard (40 CFR 140.3(c)), this provision was not applicable to the new vessels. Based on the probable adoption of the recommended revision of EPA's Standard, during the next 12 months, § 159.13 (Waiver for New Vessels) is added to permit certified flow-through devices to be installed on new vessels for 1 year. This effectively treats a vessel constructed during this 1-year period as an "existing vessel".

Some other comments asked whether a discharge type device can be used in a no-discharge zone established by a state before the effective date of the regulations in this document if the device complies with the regulations in this document. A state cannot enforce a no-discharge prohibition on United States waters against vessels with a certified device until a no-discharge prohibition is established under section 312(f)(3) or (4).

Section 312(f) (3) and (4) of FWPCA provides, in part, that after the effective date of the regulations in this document a state may prohibit the discharge of sewage, whether treated or not, into some or all of its waters if the EPA has determined "that adequate facilities for the safe and sanitary removal and treatment of sewage from all vessels are reasonably available" for the waters in which the no-discharge prohibition is to apply. Thus, the use of a discharge treatment device, which is certified pursuant to the regulations in this document, can be prohibited under section 312(f) (3) and (4) in designated state waters.

Several comments asked whether a toilet bowl is a part of a marine sanitation device. A toilet bowl will not be tested as part of the device unless it is a part of the container enclosing the device or unless it is bolted to or otherwise fastened to the device.

Several comments were received asking whether a device that is designed to retain sewage on board a vessel which also has a through-hull fitting for use in discharging sewage into the water can be certified pursuant to the regulations in this document. The regulations in this document do not preclude the use of a through-hull fitting. However, a device furnished with a through-hull fitting will not be certified unless there is some means of preventing discharge of sewage through the fitting.

Comments were received requesting that separate regulations be issued for each class of vessel. The design and equipment requirements in the final rules apply to devices used on board all vessels regardless of class. However, because a particular test required by these regulations may not be necessary or appropriate for an MSD to be used on a particular class of vessel, § 159.19 in the final regulations allows the manufacturer of a device to apply for authorization to delete a test which is not applicable or to perform an equivalent test in lieu of the required test.

One comment recommended that a device certified pursuant to the regulations in this document be tested at some time after installation on a vessel to ensure that it continues to be operable. A program for inspecting representative devices will be established. If these inspections show that devices are not being manufactured substantially the same as the test device, the manufacturer's letter of authorization, issued under § 159.16, will be suspended or terminated.

One comment asked that the term "territorial seas" in § 159.1 be defined as a fixed distance from the shore. The FWPCA, under which these rules are promulgated, defines "territorial seas," in 33 U.S.C. 1362(8), and this definition is added to the definitions in these regulations.

Several comments requested that the applicability of the regulations be clarified. Since the distinction between a "new vessel" and an "existing vessel" is important to the applicability of these regulations to vessel operators, the definitions from the FWPCA are added to § 159.3.

One comment contended that built-in holding tanks are not marine sanitation devices. The definition of "marine sanitation device" in 33 U.S.C. 1322(a)(5) includes any equipment installed on a vessel which is designed to retain sewage. If there is a problem with testing a built-in holding tank, the manufacturer may request an equivalent test under § 159.19. Several comments were received which requested a determination as to applicability of these regulations to "portable devices" such as those self contained units capable of being carried on and off a vessel. These regulations are not applicable to such "portable devices".

One comment requested that proposed § 159.3(f) specify that sewage is only waste from toilets and not from showers or washbasins. The definition of sewage does not include the normal effluents from washbasins or showers, and the definition is considered to be clear without change.

JRB Associates, Inc.

Several comments requested clarification of the effective dates of the regulations. Section 159.5 is being changed by adding the effective dates for new and existing vessels. One comment asked whether proposed §§ 159.5 and 159.7 are effective immediately. These sections are effective January 30, 1977, for new vessels and January 30, 1980, for existing vessels.

Though the rules speak to certification procedures and design and construction requirements for marine sanitation devices, the Coast Guard believes that this preamble is an appropriate place to clarify the operator requirements for the carriage of marine sanitation devices. These requirements were prescribed in part, in section 312 of the FWPCA and in EPA's regulations of June 23, 1972, adopting the no-discharge standard. The following information is an attempt to provide that clarification:

Vessel type	Must be equipped with a—	Except when the vessel is equipped with—
Existing—A vessel whose construction was initiated [1] before January 30, 1975.	Coast Guard certified no-discharge MSD on and after January 30, 1980.	A Coast Guard certified discharge type MSD installed on or before January 30, 1978. This MSD can be used as long as it operates properly; or A Coast Guard certified discharge type MSD installed after January 30, 1978, but before January 30, 1980. This MSD can be used until January 30, 1983. After January 30, 1983, a Coast Guard certified no-discharge MSD is required.
New—A vessel whose construction was initiated [1] after January 30, 1975.	Coast Guard certified no-discharge MSD on and after January 30, 1977.	A Coast Guard certified discharge type MSD installed on or before January 30, 1976. This MSD can be used as long as it operates properly.

[1] For many years the Coast Guard has considered the initiation or commencement of construction to be the laying of a keel or similar stage of construction.

Section 159.12 is added to the final rule in response to comments concerned with the problem of vessels presently equipped with no-discharge type MSD's and equipping vessels with MSD's before certified and labeled devices are available under these regulations. All no-discharge type devices installed prior to January 30, 1975, are considered certified but will not be labeled. During the interim between promulgation of these regulations and the time when there will be recognized facilities to certify devices, the Coast Guard will certify devices that meet EPA standards. There will also be no label required on these certified devices. The Coast Guard will compile and distribute lists of the MSD models that have been certified by this method.

Several comments concerned what facilities would be recognized to test MSD's. The Coast Guard intends to recognize any facility that meets the requirements in subpart D of the regulations for a recognized facility.

Several comments suggested that manufacturers be required to furnish proof of product liability insurance or to warrant their product. The Coast Guard does not have the authority to require this.

One comment suggested the addition of a provision that states that the information that is required is considered proprietary. Section 312(g)(3) of the FWPCA states that any information that relates to a trade secret or other matter that is referred to in 18 U.S.C. 1905 shall be considered confidential. Therefore, it is unnecessary to include this provision.

One comment states that appeal by a manufacturer of a denial of certification by the Coast Guard should be an adjudicatory proceeding under 5 U.S.C. 556. The appeal procedures in 46 CFR 2.75 that are referenced in paragraph (d) apply to all marine equipment that the Coast Guard approves for use on inspected vessels and provides the necessary procedural protection.

The heading of § 159.16 is changed to reflect the contents of the section. The letter of authorization authorizes a manufacturer to certify by labeling that these devices are in all material respects substantially the same as the test device certified by the U.S. Coast Guard pursuant to Section 312 of the FWPCA Amendments of 1972.

Section 159.17, "Changes to certified devices," does not preclude a manufacturer or recognized facility from recommending which additional tests may be required by the changes in the device; however, the Coast Guard makes the final determination.

Many comments asked what data is acceptable as equivalent testing under § 159.19. The Coast Guard will consider any data that is submitted by a manufacturer in the determination of equivalency. For example, proof of satisfactory performance of a device that has been in use may be considered equivalent to the mechanical tests that are required by the regulations. Biological tests during development of the device may be acceptable.

Comments questioned tests of holding tanks that are an integral unit of the vessel. If it can be determined from a vessel's plans or design criteria that the tank is capable of the necessary performance, no tests are required; however, final determination depends upon the performance of the device as a system after installation and service on the vessel.

If it is impractical to test an entire system as a unit, selected components may be tested; however, final determination depends upon the performance of the unit after installation and service on the vessel.

Several comments requested that § 159.55 require only information on the device itself that would identify it. The information required in § 159.55, as it appeared in the Notice of Proposed Rule Making, was meant to aid the user in the operation of the device. The requirement of this information has been moved to § 159.57. This change results in a smaller information plate on the device, while at the same time still providing the used with the needed information in the operating instructions.

The reference in proposed § 159.55(a)(14) has been moved to § 159.55(a)(5). The information required by this section is intended to indicate whether the device is to be installed on an inspected or an uninspected vessel and the language used in the proposed rule has been changed in the final rule to reflect this intent.

Several comments noted that the method outlined in § 159.55(b) of affixing the information required by § 159.55 (a) to the device might result in leakage problems for tanks constructed of certain materials. Section 159.55(b) has been changed in the final rule to allow for lettering the required information on the device itself as long as the procedure used makes the lettering resistant to the marine environment and the chemicals used in the marine sanitation device and as long as it will be obvious if the information is altered or removed.

The intent of proposed § 159.59 was that the required placard accompany each device. The wording in the final rule has been changed to make this intent clear.

Several comments noted that all vents will clog under certain circumstances and, therefore, it would be impossible to design a vent that would comply with the requirements of proposed § 159.61. The final rule has been changed to require a design that will minimize the occurrence of clogging.

Section 159.65 is being changed to create an alternative method of indicating the amount of chemical supply needed to operate a device. Under the proposed rule, the device had to be designed to indicate the supply of chemicals in the divice at all times. The final rule allows this method, but also allows a method that will indicate when chemicals must be added to the device for its proper continued operation.

Proposed §159.71 required wire to be stranded "when subject to vibration * * *." One comment noted the difficulty in determining which devices would be subject to vibration. Vibration is a force inherent in the marine environment and unstranded wire would be subject to breakage when introduced into that environment. the language of § 159.71 has been changed in the final rule to require all electrical wiring to be stranded.

One comment noted that baffles having openings to allow liquid and vapor to flow freely across the top and bottom of the tank would be ineffective in minimizing short circuiting of sewage. A distinction must be made between tank baffles

and tank partitions. Tank baffles are fitted into tanks of large surface area to hinder the motion of liquid when the tank is subjected to dynamic motion. Tank partitions subdivide a tank and control the access of liquid from one section to another. Tank partitions would be used in the sewage processing. Section 159.81 does not apply to tank partitions.

Section 159.83 is changed in light of comments from continuous level indication to an indication of the level in the system when the holding tank or tanks should be emptied.

Section 159.85 is being changed to require that nearly all of the material can be emptied. This change reflects the difficulty in pumping a tank completely dry, but the intent of this section is still to require a complete pump out.

One comment requested that the size of the pipe in § 159.87 be deleted from the regulations. The individual making the comment uses a pipe size between those in the section. Adapters are available to bring the fitting to the required size and thus the sizes are retained in the section. The sizes in the section are recommended in the International Convention for the Prevention of Pollution from Ships, 1973.

Several comments asked what duration of time was intended in § 159.89. A momentary loss of power with immediate resumption of power is intended. A total loss of power is covered in § 159.53.

Several comments stated that proposed § 159.91, which required a means to obtain a sample of effluent, is unnecessary. This section has been deleted.

Sections 159.95(a)(1) and (2) are being changed in response to comments pointing out that toxic gases are unavoidably generated in certain treatment methods. Fire protection aboard vessels is the subject of a continuing Coast Guard research and development study and fire protection regulations may be promulgated later.

Several comments requested that proposed § 159.101 be changed to allow some deterioration of a device after all the tests are completed. Section 159.101 is changed to require that there be no deterioration of the device affecting its operation or safety after each test. The change is consistent with the objective of the testing sections to ensure that the device operates properly and safely. Cosmetic cracking which does not impair the operation or safety of the device is not within the scope of these regulations.

Sections 159.103 through 159.105 are clarified to require that liquid retention components be filled with water to one-half of their volume. This requirement is applicable to all liquid retention components, including those that are full during normal operation. Although the size and shape of the components materially affect the severity of the tests upon the devices under §§ 159.103 through 159.107, requiring the components to be filled to one half of their volume is expected to ensure a sufficiently severe test for each device.

In response to comments requesting that the number of shocks a device must be subjected to in proposed § 159.105 be reduced, the section is changed to require 1000 shocks rather than the proposed 5000. Comments requesting that the force and duration of the shocks in proposed § 159.105 be reduced are not adopted in the regulations. The test force of 10g's for 20–25 milliseconds is similar to the force in the Underwriters' Laboratories, Inc. test for fuel tanks.

Section 159.109 is changed to more accurately reflect a pressure test.

Section 159.111 is changed to require a positive displacement pump to empty the tank. This positive displacement pump ensures a vacuum in the tank after it is emptied during the Pressure and Vacuum Pulse Test.

Proposed § 159.117(a) is changed to require the chemical resistance test for materials that come into contact with vapors in the normal operation of the device. Contact with vapors makes the test necessary because vapors might dissolve certain materials.

Proposed § 159.117(b)(3) is changed to expand the submersion requirement to chemicals used or emitted, in addition to those produced in the operation of the device.

Proposed § 159.119 is changed by substituting operating-fluid temperature for water temperature. This change recognizes the fact that some devices operate with fluid other than water.

Proposed § 159.121(b) is changed by dropping the requirement that a filter cigarette be processed by the device. Several comments requested this change. The intent of the processing test is to find out if a device will operate normally. Processing a cigarette is beyond the scope of this test.

Several comments requested that the amount and type of human sewage to be processed in proposed § 159.121(c) be more clearly defined. This paragraph is changed in light of these comments to require a urination to defecation ratio of four to one and require at least one defecation per test person per day. The amount of sewage required for each device each day is the amount required to be specified in § 159.57(b)(8).

One comment noted that the minimum of 500 milligrams suspended solids required in the fresh domestic sewage in proposed § 159.121(d) is an unrealistically high density. This paragraph has been changed in response to this comment to allow primary sludge to be added to the domestic sewage to bring its amount of suspended solids up to a point that will duplicate the shipboard wastes which are generally more concentrated than domestic sewages.

A comment from EPA requested that the number of samples required in §§ 159.123 through 159.127 be increased from 30 to 40. This comment is adopted in this regulation and 40 samples will be required in these sections. The larger number of samples required should provide a greater statistical confidence in the tests.

Proposed § 159.123(b) is changed to require that four samples be taken each day. Also added is the requirement that one of these four samples be taken after the peak capacity processing period. This sample will help determine the effect of the high loading of the device.

Several comments stated that the turbidity test for visible floating solids in § 159.125 was not valid and was too severe, and recommended that the screening test, that was included in the advance notice, be reinstated. In consideration of these comments the Coast Guard consulted with the EPA and is reinstating a screening test as the test for visible floating solids under § 159.125. Section 159.125 requires the flush of the MSD to be poured expeditiously through a U.S. Sieve #12. The material caught on the screen is dried and weighed. This weight, expressed in the form of milligrams per liter, is compared to the total suspended solids of a like sample of flush. The material on the screen, expressed in the form of milligrams per liter, cannot exceed 10 percent of the total suspended solids in the sample flush. This test must be repeated 40 times. This test is intended to measure when individual particles are too small to be easily visible in water. Any large particles that exist after maceration will be caught on the screen and therefore will be measured. This is a definitive, easily repeatable test which can give an objective measurement of visible floating solids.

One comment questioned the Coast Guard's authority to regulate, in § 159.127, the fecal coliform bacteria count for recirculating devices. The comment stated that this requirement establishes operating standards that are beyond the scope of mechanical safety. Section 312(b)(1) of the FWPCA directs the Coast Guard to promulgate regulations that are consistent with maritime safety to govern "the design, construction, installation, and operation of any marine sanitation device" on board a vessel. Control of this bacteria count is consistent with the maritime safety considerations. EPA recommended that 1000 fecal coliform bacteria count is too high from a sanitation standpoint, accordingly it is reduced to 240.

Several comments requested that a device not intended to be installed in an explosive atmosphere be exempted from § 159.129. These comments are adopted in this regulation.

Several comments stated that there are no standards for the approval of recognized facilities. The final rule is changed accordingly. A set of criteria needed to become a recognized facility is included in subpart D. This change sets down in specific terms the general requirements in proposed § 159.33.

In consideration of the foregoing, Chapter I of Title 33 of the Code of Federal Regulations is amended by adding a new part 159 to read as follows:

Subpart A—General

Sec	
159.1	Purpose.
159.3	Definitions.
159.5	Requirements for vessel manufacturers.
159.7	Requirements for vessel operators.

Subpart B—Certification Procedures

Sec
159.11 Purpose.
159.12 Regulation for certification of existing devices.
159.13 Waiver for new vessels manufactured before 30 January 1976.
159.14 Application for certification.
159.15 Certification.
159.16 Authorization to label devices.
159.17 Changes to certified devices.
159.19 Testing equivalency.

Subpart C—Design, Construction, and Testing

159.51 Purpose and scope.
159.53 General requirements.
159.55 Identification.
159.57 Installation, operation, and maintenance instructions.
159.59 Placard.
159.61 Vents.
159.63 Access to parts.
159.65 Chemical level indicator.
159.67 Electrical component ratings.
159.69 Motor ratings.
159.71 Electrical controls and conductors.
159.73 Conductors.
159.75 Overcurrent protection.
159.79 Terminals.
159.81 Baffles.
159.83 Level indicator.
159.85 Sewage removal.
159.87 Removal fittings.
159.89 Power interruption: discharge devices.
159.93 Independent supporting.
159.95 Safety.
159.97 Safety: inspected vessels.
159.101 Testing: general.
159.103 Vibration test.
159.105 Shock test.
159.107 Rolling test.
159.109 Pressure test.
159.111 Pressure and Vacuum Pulse test.
159.115 Temperature range test.
159.117 Chemical resistance test.
159.119 Operability test; temperature range.
159.121 Sewage processing test.
159.123 Coliform test: discharge devices.
159.125 Visible floating solids: discharge devices.
159.127 Safety Coliform count: recirculating devices.
159.129 Safety: Ignition prevention test.
159.131 Safety: Incinerating device.

Subpart D—Recognition of Facilities

159.201 Application.
159.205 Criteria for recognition.

AUTHORITY: Sec. 312(b)(1), 86 Stat. 871 (33 U.S.C. 1322(b)(1); 49 CFR 1.45(b) and 1.46 (l) and (m).

Subpart A—General

§ 159.1 Purpose.

This part prescribes regulations governing the design and construction of marine sanitation devices and procedures for certifying that marine sanitation devices meet the regulations and the standards of the Environmental Protection Agency promulgated under section 312 of the Federal Water Pollution Control Act (33 U.S.C. 1322), to eliminate the discharge of untreated sewage from vessels into the waters of the United States, including the territorial seas. Subpart A of this part contains regulations governing the manufacture and operation of vessels equipped with marine sanitation devices.

§ 159.3 Definitions.

In this part:

(a) "Coast Guard" means the Commandant or his authorized representative.

(b) "Discharge" includes, but is not limited to, any spilling, leaking, pouring, pumping, emitting, emptying, or dumping.

(c) "Existing vessel" includes every vessel, the construction of which was initiated before promulgation of the standards and regulations in this part.

(d) "Inspected vessel" means any vessel that is required to be inspected under 46 CFR Chapter I.

(e) "Manufacturer" means any person engaged in manufacturing, assembling, or importing of marine sanitation devices or of vessels subject to the standards and regulations promulgated under section 312 of the Federal Water Pollution Control Act.

(f) "Marine sanitation device" and "device" includes any equipment for installation on board a vessel which is designed to receive, retain, treat, or discharge sewage, and any process to treat such sewage.

(g) "New vessel" includes any vessel, the construction of which is initiated after promulgation of the standards and regulations in this part.

(h) "Person" means an individual, partnership, firm, corporation, or association, but does not include an individual on board a public vessel.

(i) "Public vessel" means a vessel owned or bare-boat chartered and operated by the United States, by a State or political subdivision thereof, or by a foreign nation, except when such vessel is engaged in commerce.

(j) "Recognized facility" means any laboratory or facility listed by the Coast Guard as a recognized facility under this part.

(k) "Sewage" means human body wastes and the wastes from toilets and other receptacles intended to receive or retain body waste.

(l) "Territorial seas" means the belt of the seas measured from the line of ordinary low water along that portion of the coast which is in direct contact with the open sea and the line marking the seaward limit of inland waters, and extending seaward a distance of 3 miles.

(m) "Uninspected vessel" means any vessel that is not required to be inspected under 46 CFR Chapter I.

(n) "United States" includes the States, the District of Columbia, the Commonwealth of Puerto Rico, the Virgin Islands, Guam, American Samoa, the Canal Zone, and the Trust Territory of the Pacific Islands.

(o) "Vessel" includes every description of watercraft or other artificial contrivance used, or capable of being used, as a means of transportation on the navigable waters.

§ 159.5 Requirements for vessel manufacturers.

(a) After January 30, 1977, no manufacturer may manufacture for sale, or distribute for sale or resale any new vessel, except a vessel not equipped with installed toilet facilities, unless it is equipped with:

(1) An operable no-discharge type marine sanitation device that has a label placed on it under § 159.16, or that is certified under § 159.12.

(b) After January 30, 1980, no manufacturer may sell, or offer for sale, or distribute for sale or resale any existing vessel, except a vessel not equipped with installed toilet facilities, unless it is equipped with:

(1) An operable no-discharge type device that has a label placed on it under § 159.16 or that is certified under § 159.12, or

(2) An operable discharge type device installed on the vessel prior to January 30, 1980, that has a label placed on it under § 159.16 or that is certified under § 159.12.

(c) After January 30, 1983, no manufacturer may sell, or offer for sale, or distribute for sale or resale any existing vessel, except a vessel not equipped with installed toilet facilities, unless it is equipped with:

(1) An operable no-discharge type device that has a label placed on it under § 159.16 or that is certified under § 159.12, or

(2) An operable discharge type device installed on the vessel prior to January 30, 1978, that has a label placed on it under § 159.16 or that is certified under § 159.12.

§ 159.7 Requirements for vessel operators.

(a) After January 30, 1977, no person may operate any new vessel, except a vessel not equipped with installed toilet facilities, unless it is equipped with:

(1) An operable no-discharge type marine sanitation device that has a label placed on it under § 159.16, or that is certified under § 159.12.

(b) After January 30, 1980, no person may operate any existing vessel, except a vessel not equipped with installed toilet facilities, unless it is equipped with:

(1) An operable no-discharge type device that has a label placed on it under § 159.16 or that is certified under § 159.12, or

(2) An operable discharge type device installed on the vessel prior to January 30, 1980, that has a label placed on it under § 159.16 or that is certified under § 159.12.

(c) After January 30, 1983, no person may operate any existing vessel, except a vessel not equipped with installed toilet facilities, unless it is equipped with:

(1) An operable no-discharge type device that has a label placed on it under § 159.16 or that is certified under § 159.12, or

(2) An operable discharge type device installed on the vessel prior to January 30, 1978, that has a label placed on it under § 159.16 or that is certified under § 159.12.

Subpart B—Certification Procedures

§ 159.11 Purpose.

This subpart prescribes procedures for certification of marine sanitation devices and authorization for labels on certified devices.

JRB Associates, Inc.

§ 159.12 Regulations for certification of existing devices.

(a) The purpose of this section is to provide regulations for certification of existing devices until manufacturers can design and manufacture devices that comply with this part and recognized facilities are prepared to perform the testing required by this part.

(b) Any no-discharge type device which was installed on an existing vessel prior to January 30, 1975, is considered certified.

(c) Any person may apply to the Commandant (G-MMT/82), U.S. Coast Guard, Washington, D.C. 20590 for certification of a marine sanitation device manufactured before January 30, 1976. The Coast Guard will issue a letter certifying the device if the applicant shows that the device meets § 159.53 of this part by:

(1) Evidence that the device meets state standards at least equal to the standards in § 159.53, or

(2) Test conducted under this part by a recognized laboratory, or

(3) Evidence that the device is substantially equivalent to a device certified under this section, or

(4) A Coast Guard field test if considered necessary by the Coast Guard.

(d) The Coast Guard will maintain and make available a list that identifies each device certified under this section.

(e) Devices certified under this section in compliance with § 159.53 need not meet the other regulations in this part and may not be labeled under § 159.16.

§ 159.13 Waiver for new vessels manufactured before January 30, 1976.

(a) The Commandant hereby waives the requirements of §§ 159.5(a) and 159.7(a) for new vessels until January 30, 1976, if the manufacturer or operator applies to and receives from Commandant (G-MMT/82), U.S. Coast Guard, Washington, D.C. 20590 certification under this section. The Coast Guard will issue a letter certifying the device if it is shown that the device meets § 159.53(b) by:

(1) Evidence that the device meets state standards at least equal to the standards in § 159.53(b), or

(2) Test conducted under this part by a recognized laboratory, or

(3) Evidence that the device is substantially equivalent to a device certified under this section, or

(4) A Coast Guard field test if considered necessary by the Coast Guard.

(b) The Coast Guard will maintain and make available a list that identifies each device so certified under this section.

(c) Devices certified under this section in compliance with § 159.53(b) need not meet the other regulations in this part and may not be labeled under § 159.16.

§ 159.14 Application for certification.

(a) Any manufacturer may apply to any recognized facility for certification of a marine sanitation device. The application for certification must indicate if the device will be used aboard all vessels or only aboard uninspected vessels.

(b) An application may be in any format but must be in writing and must be signed by an authorized representative of the manufacturer and include or be accompanied by:

(1) A complete description of the manufacturer's production quality control and inspection methods, record keeping systems pertaining to the manufacture of marine sanitation devices, and testing procedures;

(2) The design for the device, including drawings, specifications and other information that describes the materials, construction and operation of the device;

(3) The installation, operation, and maintenance instructions for the device; and

(4) The name and address of the applicant and the manufacturing facility.

(c) The manufacturer must furnish the recognized facility one device of each model for which certification is requested and samples of each material from which the device is constructed, that must be tested destructively under § 159.117. The device furnished is for the testing required by this part except that, for devices that are not suited for unit testing, the manufacturer may submit the design so that the recognized facility may determine the components of the device and materials to be submitted for testing and the tests to be performed at a place other than the facility. The Coast Guard must review and accept all such determinations before testing is begun.

(d) At the time of submittal of an application to a recognized facility the manufacturer must notify the Coast Guard of the type and model of the device, the name of the recognized facility to which application is being made, and the name and address of the manufacturer, and submit a signed statement of the times when the manufacturer will permit designated officers and employees of the Coast Guard to have access to the manufacturer's facilities and all records required by this part.

§ 159.15 Certification.

(a) The recognized facility must evaluate the information that is submitted by the manufacturer in accordance with § 159.14(b) (1), (2), and (3), evaluate the device for compliance with § 159.53 through § 159.97, test the device in accordance with § 159.101 and submit to the Commandant (G-MMT/82), U.S. Coast Guard, Washington, D.C. 20590 the following:

(1) The information that is required under § 159.14(b);

(2) A report on compliance evaluation;

(3) A description of each test;

(4) Test results; and

(5) A statement, that is signed by the person in charge of testing, that the test results are accurate and complete.

(b) The Coast Guard certifies a test device, on the design of the device, if it determines, after consideration of the information that is required under paragraph (a) of this section, that the device meets the requirements in Subpart C of this part.

(c) The Coast Guard notifies the manufacturer and recognized facility of its determination under paragraph (b) of this section. If the device is certified, the Coast Guard includes a certification number for the device. If certification is denied, the Coast Guard notifies the manufacturer and recognized facility of the requirements of this part that are not met. The manufacturer may appeal a denial to the Commandant (G-MMT/82), U.S. Coast Guard, Washington, D.C. 20590.

(d) If upon re-examination of the test device, the Coast Guard determines that the device does not in fact comply with the requirements of Subpart C of this part, it may terminate the certification.

§ 159.16 Authorization to label devices.

(a) When a test device is certified under § 159.15(b), the Coast Guard will issue a letter that authorizes the manufacturer to label each device that he manufactures with the manufacturer's certification that the device is in all material respects substantially the same as a test device certified by the U.S. Coast Guard pursuant to section 312 of the Federal Water Pollution Control Act Amendments of 1972.

(b) Certification placed on a device by its manufacturer under this section is the certification required by section 312(h)(4) of the Federal Water Pollution Control Act Amendments of 1972, which makes it unlawful for a vessel that is subject to the standards and regulations promulgated under the Act to operate on the navigable waters of the United States, if such vessel is not equipped with an operable marine sanitation device certified pursuant to section 312 of the Act.

(c) Letters of authorization issued under this section are valid for 5 years, unless sooner suspended, withdrawn, or terminated and may be reissued upon written request of the manufacturer to whom the letter was issued.

(d) The Coast Guard, in accordance with the procedure in 46 CFR 2.75, may suspend, withdraw, or terminate any letter of authorization issued under this section if the Coast Guard finds that the manufacturer is engaged in the manufacture of devices labeled under this part that are not in all material respects substantially the same as a test device certified pursuant to this part.

§ 159.17 Changes to certified devices.

(a) The manufacturer of a device that is certified under this part shall notify the Commandant (G-MMT/82), U.S. Coast Guard, Washington, D.C. 20590 in writing of any change in the design of the device.

(b) A manufacturer shall include with a notice under paragraph (a) of this section a description of the change, its advantages, and the recommendation of the recognized facility as to whether the device remains in all material respects substantially the same as the original test device.

(c) After notice under paragraph (a) of this section, the Coast Guard notifies the manufacturer and the recognized facility in writing of any tests that must be made for certification of the device or for any change in the letter of authorization. The manufacturer may appeal this determination to the Commandant (G-MMT/82), U.S. Coast Guard, Washington, D.C. 20590.

§ 159.19 Testing equivalency.

(a) If a test required by this part may not be practicable or necessary, a manufacturer may apply to the Commandant (G-MMT/82), U.S. Coast Guard, Washington, D.C. 20590 for deletion or approval of an alternative test as equivalent to the test requirements in this part. The application must include the manufacturer's justification for deletion or the alternative test and any alternative test data.

(b) The Coast Guard notifies the manufacturer of its determination under paragraph (a) of this section and that determination is final.

Subpart C—Design, Construction, and Testing

§ 159.51 Purpose and scope.

(a) This subpart prescribes regulations governing the design and construction of marine sanitation devices.

(b) Unless otherwise authorized by the Coast Guard each device for which certification under this part is requested must meet the requirements of this subpart.

§ 159.53 General requirements.

A device must either:

(a) Be designed to prevent the overboard discharge of treated or untreated sewage or any waste derived from sewage; or

(b) Under the test conditions described in §§ 159.123 and 159.125 be capable of providing a degree of treatment that will reduce fecal coliform bacteria to no more than 1,000 per 100 milliliters and prevent the discharge of an effluent with visible floating solids.

§ 159.55 Identification.

(a) Each production device must be legibly marked in accordance with paragraph (b) of this section with the following information:

(1) The name of the manufacturer.

(2) The name and model number of the device.

(3) The month and year of completion of manufacture.

(4) Serial number.

(5) Whether the device is certified for use on an inspected or an uninspected vessel.

(b) The information required by paragraph (a) of this section must appear on a nameplate attached to the device or in lettering on the device. The nameplate or lettering stamped on the device must be capable of withstanding without loss of legibility the combined effects of normal wear and tear and exposure to water, salt spray, direct sunlight, heat, cold, and any substance listed in § 159.117 (b) and (c). The nameplate and lettering must be designed to resist efforts to remove them from the device or efforts to alter the information stamped on the nameplate or the device without leaving some obvious evidence of the attempted removal or alteration.

§ 159.57 Installation, operation, and maintenance instructions.

(a) The instructions supplied by the manufacturer must contain directions for each of the following:

(1) Installation of the device in a manner that will permit ready access to all parts of the device requiring routine service and that will provide any flue clearance necessary for fire safety.

(2) Safe operation and servicing of the device so that any discharge meets the requirements of §§ 159.123 and 159.125.

(3) Cleaning, winter layup, and ash or sludge removal.

(4) Installation of a vent or flue pipe.

(5) The type and quantity of chemicals that are required to operate the device, including instructions on the proper handling, storage and use of these chemicals.

(6) Recommended methods of making required plumbing and electrical connections including fuel connections and supply circuit overcurrent protection.

(b) The instructions supplied by the manufacturer must include the following information:

(1) The name of the manufacturer.

(2) The name and model number of the device.

(3) Whether the device is certified for use on an inspected, or uninspected vessel.

(4) A complete parts list.

(5) A schematic diagram showing the relative location of each part.

(6) A wiring diagram.

(7) A description of the service that may be performed by the user without coming into contact with sewage or chemicals.

(8) Average and peak capacity of the device for the flow rate, volume, or number of persons that the device is capable of serving and the period of time the device is rated to operate at peak capacity.

(9) The power requirements, including voltage and current.

(10) The type and quantity of fuel required.

(11) The duration of the operating cycle for unitized incinerating devices.

(12) The maximum angles of pitch and roll at which the device operates in accordance with the requirements of §§ 159.123 and 159.125.

(13) Whether the device is designed to operate in salt, fresh, or brackish water.

(14) The maximum hydrostatic pressure at which a pressurized sewage retention tank meets the requirements of § 159.111.

(15) The maximum operating level of liquid retention components.

§ 159.59 Placard.

Each device must have a placard suitable for posting on which is printed the operating instructions, safety precautions, and warnings pertinent to the device. The size of the letters printed on the placard must be one-eighth of an inch or larger.

§ 159.61 Vents.

Vents must be designed and constructed to minimize clogging by either the contents of the tank or climactic conditions such as snow or ice.

§ 159.63 Access to parts.

Each part of the device that is required by the manufacturer's instructions to be serviced routinely must be readily accessible in the installed position of the device recommended by the manufacturer.

§ 159.65 Chemical level indicator.

The device must be equipped with one of the following:

(a) A means of indicating the amount in the device of any chemical that is necessary for its effective operation.

(b) A means of indicating when chemicals must be added for the proper continued operation of the device.

§ 159.67 Electrical component ratings.

Electrical components must have current and voltage ratings equal to or greater than the maximum load they may carry.

§ 159.69 Motor ratings.

Motors must be rated to operate at 50° C ambient temperature.

§ 159.71 Electrical controls and conductors.

Electrical controls and conductors must be installed in accordance with good marine practice. Wire must be copper and must be stranded. Electrical controls and conductors must be protected from exposure to chemicals and sewage.

§ 159.73 Conductors.

Current carrying conductors must be electrically insulated from non-current carrying metal parts.

§ 159.75 Overcurrent protection.

Overcurrent protection must be provided within the unit to protect subcomponents of the device if the manufacturer's recommended supply circuit overcurrent protection is not adequate for these subcomponents.

§ 159.79 Terminals.

Terminals must be solderless lugs with ring type or captive spade ends, must have provisions for being locked against movement from vibration, and must be marked for identification on the wiring diagram required in § 159.57. Terminal blocks must be nonabsorbent and securely mounted. Terminal blocks must be provided with barrier insulation that prevents contact between adjacent terminals or metal surfaces.

§ 159.81 Baffles.

Baffles in sewage retention tanks, if any, must have openings to allow liquid

and vapor to flow freely across the top and bottom of the tank.

§ 159.83 Level indicator.

Each sewage retention device must have a means of indicating when the device is more than ¾ full by volume.

§ 159.85 Sewage removal.

The device must be designed for efficient removal of nearly all of the liquid and solids in the sewage retention tank.

§ 159.87 Removal fittings.

If sewage removal fittings or adapters are provided with the device, they must be of either 1½" or 4" nominal pipe size.

§ 158.89 Power interruption: discharge devices.

A discharge device must be designed so that a momentary loss of power during operation of the device does not allow a discharge that does not meet the requirements in §§ 159.123 and 159.125.

§ 159.93 Independent supporting.

The device must have provisions for supporting that are independent from connecting pipes.

§ 159.95 Safety.

(a) Each device must—

(1) Be free of design defects such as rough or sharp edges that may cause bodily injuries or that would allow toxic substances to escape to the interior of the vessel;

(2) Be vented or provided with a means to prevent an explosion or over pressurization as a result of an accumulation of gases; and

(3) Meet all other safety requirements of the regulations applicable to the type of vessel for which it is certified.

(b) A chemical that is specified or provided by the manufacturer for use in the operation of a device and is defined as a hazardous material in 46 CFR Part 146 must be certified by the procedures in 46 CFR Part 147.

(c) Current carrying components must be protected from accidental contact by personnel operating or routinely servicing the device. All current carrying components must as a minimum be of drip-proof construction or be enclosed within a drip-proof compartment.

§ 159.97 Safety: inspected vessels.

The design and construction of a device to be certified for installation and operation on board an inspected vessel must be shown by tests and reports of inspection to be consistent with applicable marine engineering requirements in Subchapter F of Title 46, Code of Federal Regulations, and with applicable electrical engineering requirements in Subchapter J of Title 46, Code of Federal Regulations.

§ 159.101 Testing: general.

Unless otherwise authorized by the Coast Guard, a recognized facility must perform each test described in §§ 159.103 through 159.125. The same device must be used for each test and tested in the order in which the tests are described. There must be no cracking, softening, deterioration, displacement, breakage, leakage or damage of components or materials that affects the operation or safety of the device after each test described in §§ 159.103 through 159.117 and § 159.121, and the device must remain operable after the test described in § 159.119. The device must be set up in a manner simulating installation on a vessel in accordance with the manufacturer's instructions with respect to mounting, water supply, and discharge fittings.

§ 159.103 Vibration test.

The device, with liquid retention components, if any, filled with water to one-half of their volume, must be subjected to a sinusoidal vibration for a period of 12 hours, 4 hours in each of the x, y, and z planes, at the resonant frequency of the device (or at 55 cycles per second if there is no resonant frequency between 10 to 60 hertz) and with a peak amplitude of 0.019 to 0.021 inches.

§ 159.105 Shock test.

The device, with liquid retention components, if any, filled with water to half of their volume, must be subjected to 1,000 vertical shocks that are ten times the force of gravity (10g) and have a duration of 20–25 milliseconds measured at the base of the half-sine shock envelope.

§ 159.107 Rolling test.

(a) The device, with liquid retention components, if any, filled with water to half of their volume, must be subjected to 100 cycles with the axis of rotation 4 feet from the centerline of the device, no more than 6 inches below the plane of the bottom of the device, and parallel to any tank baffles. The device must then be rotated 90 degrees on its vertical axis and subjected to another 100 cycles. This testing must be repeated with the liquid retention components filled to the maximum operating level as specified by the manufacturer in § 159.57.

(b) Eighty percent of the rolling action must be approximately 15 degrees on either side of the vertical and at a cyclic rate of 3 to 4 seconds. Twenty percent motions must be approximately 30 degrees, or the maximum angle specified by the manufacturer under § 159.57, whichever is greater, on either side of the vertical at a cyclic rate of 6 to 8 seconds.

§ 159.109 Pressure test.

Any sewage retention tank that is designed to operate under pressure must be pressurized hydrostatically at a pressure head of 7 feet or to 150 percent of the maximum pressure specified by the manufacturer for operation of the tank, whichever is greater. The tank must hold the water at this pressure for 1 hour with no evidence of leaking.

§ 159.111 Pressure and Vacuum Pulse test.

Liquid retention components of the device with manufacturer specified venting installed must be subjected to 50 fillings of water at a pressure head of 7 feet or the maximum pressure specified by the manufacturer for operation of the device, whichever is greater, and then emptied with a 45 gallon per minute or larger positive displacement pump that remains in operation 30 seconds after emptying the tank at the end of each cycle.

§ 159.115 Temperature range test.

(a) The device must be held at a temperature of 60° C or higher for a period of 16 hours.

(b) The device must be held at a temperature of −40° C or less for a period of 16 hours following winterization in accordance with manufacturers' instructions.

§ 159.117 Chemical resistance test.

(a) In each case where the recognized facility doubts the ability of a material to withstand exposure to the substances listed in paragraphs (b) and (c) of this section a sample of the material must be tested.

(b) A sample referred to in paragraph (a) of this section must be partially submerged in each of the following substances for 100 hours at an ambient temperature of 22° C.

(1) Sewage.

(2) Any disinfectant that is required in the operation of the device.

(3) Any chemical compound in solid, liquid or gaseous form, used, emitted or produced in the operation of the device.

(4) Fresh or salt (3.5 percent Sodium Chloride) flush water.

(5) Toilet bowl cleaners.

(6) Engine Oil (SAE # 30).

(7) Ethylene Glycol.

(8) Detergents (household and bilge cleaning type).

(c) A sample of the material must be doused 20 times, with a 1 hour drying period between dousings, in each of the following substances:

(1) Gasoline.

(2) Diesel fuel.

(3) Mineral spirits.

(4) Turpentine.

(5) Methyl alcohol.

§ 159.119 Operability test; temperature range.

The device must operate in an ambient temperature of 5° C with inlet operating fluid temperature varying from 2° C to 32° C and in an ambient temperature of 50° C with inlet operating fluid temperature varying from 2° C to 32° C.

§ 159.121 Sewage processing test.

(a) The device must process human sewage in the manner for which it is designed when tested in accordance with this section. There must be no sewage or sewage-treating chemicals remaining on surfaces or in crevices that could come in contact with a person using the device or servicing the device in accordance with the instructions supplied under § 159.57(b)(7).

(b) During the test the device must be operated and maintained in accordance with the manufacturer's instruc-

tions. Any initial start-up time specified by the manufacturer must be allowed before tests periods begin. For 1 hour of each 8-hour test period, the device must be tilted to the maximum angles specified by the manufacturer under §§ 159.55 and 159.57.

(c) Except for devices described in paragraph (d) of this section, the devices must process and discharge or store human sewage over at least an 8-consecutive hour period on at least 10 days within a 20-day period. The device must receive human sewage consisting of fecal matter, urine, and toilet paper in a ratio of four urinations to one defecation with at least one defecation per person per day. Devices must be tested at their average rate of capacity as specified in § 159.57. In addition, during three periods of each day the system must process sewage at the peak capacity for the period of time it is rated at peak capacity.

(d) A device that processes and discharges continuously between individual use periods or a large device, as determined by the Coast Guard, must process and discharge sewage over at least 10-consecutive days at the average daily capacity specified by the manufacturer. During three periods of each day the system must process sewage at the peak capacity for the period of time it is rated at peak capacity. The sewage for this test must be fresh, domestic sewage to which primary sludge has been added, as necessary, to create a test sewage with a minimum of 500 miligrams of suspended solids per liter.

§ 159.123 Coliform test: discharge devices.

(a) The arithmetic mean of the fecal coliform bacteria in 38 of 40 samples of effluent discharged from a discharge device during the test described in § 159.121 must be less than 1000 per 100 milliliters when tested in accordance with 40 CFR 140.5.

(b) The 40 samples must be taken from the device as follows: During each of the 10-test days, one sample must be taken at the beginning, middle, and end of an 8-consecutive hour period with one additional sample taken immediately following the peak capacity processing period.

§ 159.125 Visible floating solids: discharge devices.

During the sewage processing test (§ 159.121) 40 effluent samples of approximately 1 liter each shall be taken at the same time as samples taken in § 159.123 and passed expeditiously through a US Sieve No. 12 as specified in ASTM E-11-70. The weight of the material retained on the screen after it has been dried to a constant weight in an oven at 103° C must be divided by the volume of the sample and expressed as milligrams per liter. This value must be 10 percent or less of the total suspended solids of at least 38 of the 40 samples as determined in the 13th edition of "Standard Methods For the Examination of Water and Wastewater."

NOTE: 33 U.S.C. 1321(b)(3) prohibits discharge of harmful quantities of oil into or upon the navigable waters of the United States or adjoining shorelines or into or upon the waters of the contiguous zone. Under 40 CFR 110.3 and 110.4 such discharges of oil include discharges which:

(a) Violate applicable water quality standards, or

(b) Cause a film or sheen upon or discoloration of the surface of the water or adjoining shorelines or cause a sludge or emulsion to be deposited beneath the surface of the water or upon adjoining shorelines. If a sample contains a quantity of oil determined to be harmful, the Coast Guard will not certify the device.

§ 159.127 Safety Coliform count: recirculating devices.

Thirty-eight of forty samples of flush fluid from a recirculating device must have less than 240 fecal coliform bacteria per 100 milliliters. These samples must be collected in accordance with § 159.123(b) and tested in accordance with 40 CFR 140.5.

§ 159.129 Safety: Ignition prevention test.

(a) Components of a device that are a potential ignition source in an explosive atmosphere must pass the test in paragraph (b) or (c) of this section or meet the requirements of paragraph (d) or have a specific warning in the instruction manual required by § 159.57 that the device should not be installed in an explosive atmosphere.

(b) Components protected by vapor exclusion must be placed in a chamber filled with a rich mixture of gasoline or propane in air with the pressure being varied from 0 to 2 psig once an hour for 8 hours. Vapor readings must be taken in the void being protected and must indicate a leakage less than 20 percent of the lower explosive limit of the mixture in the chamber.

(c) Components providing ignition protection by means other than vapor exclusion must be fitted with an ignition source, such as a spark plug, and a means of injecting an explosive mixture of gasoline or propane and air into the void that protects the component. Connections must be made so as to minimize any additional volume added to the protected void by the apparatus delivering the explosive mixture. The component must be placed in a chamber filled with an explosive mixture and there must be no ignition of the explosive mixture surrounding the component when the following tests are conducted:

(1) Using any overload protection that is part of the device, the potential ignition source must be operated for one half hour at 110 percent of its rated voltage, one half hour at 50 percent of its rated voltage and one half hour at 100 percent of its rated voltage with the motor or armature locked, if the potential ignition source is a motor or part of a motor's electrical circuit.

(2) With the explosive mixture in the protected void, the test installed ignition source must be activated 50 times.

(3) The tests (1) and (2) must be repeated with any plugs removed.

(d) Components that are certified as being intrinsically safe in accordance with the Instrument Society of American (RP 12.2) or explosion proof in accordance with the Underwriters Laboratories STD 698 in Class I, Group D hazardous locations (46 CFR 111.80-5(a)) need not be subjected to this testing.

§ 159.131 Safety: Incinerating device.

An incinerating device must not incinerate unless the combustion chamber is closed, must purge the combustion chamber of combustible fuel vapors before and after incineration must secure automatically if the burner does not ignite, must not allow an accumulation of fuel, and must neither produce a temperature on surfaces adjacent to the incineration chamber higher than 67° C nor produce a temperature on surfaces in normal body contact higher than 41° C when operating in an ambient temperature of 25° C. Unitized incineration devices must completely burn to a dry, inert ash, a simultaneous defecation and urination and must not discharge fly ash, malodors, or toxic substances.

Subpart D—Recognition of Facilities

§ 159.201 Application.

(a) To apply for listing as a recognized facility under this part, a facility must apply to the Commandant (G-MMT/82), U.S. Coast Guard Headquarters, Washington, D.C. 20590 and include:

(1) Name and address;

(2) A description of the applicant's capability to perform the tests and evaluations that are required by this part, including information on personnel qualifications, equipment, materials, and facilities; and

(3) A signed statement that the Coast Guard may inspect the facility to verify its qualification and inspect the records on certification of marine sanitation devices.

(b) An applicant under paragraph (a) of this section must submit any other information the Coast Guard requests for the determination of the facility's qualification as a recognized facility.

§ 159.205 Criteria for recognition.

To qualify for and retain recognition as a recognized facility, a facility must meet the criteria in this section.

(a) The facility must maintain an organization chart that shows the personnel structure and the relationship between administration, operation, and quality control for the testing of marine sanitation devices.

(b) The facility must maintain a quality control program and a quality control manual that describes that program and the responsibilities of personnel for the testing of marine sanitation devices, including:

(1) Receiving, handling, and shipping procedures;

(2) Test procedures;

(3) The calibration system;

(4) The test report system;

(5) Certification procedures and standards;

(6) The record and filing system; and

(7) The standards and filing system for subcontracts.

(c) The facility must maintain a master file that contains the Coast Guard standards, reference standards, and the facility's test standards that apply to the testing of marine sanitation devices.

(d) The facility must maintain the shipping and receiving information for each device, including—

(1) The date of receipt;

(2) The name of the manufacturer;

(3) The type of device;

(4) A record of the visible condition of the device upon receipt; and

(5) Any other information that is necessary to accurately record and positively identify each device that is received.

(e) The facility must follow written procedures for tests of devices. These written procedures must be available for examination upon the request of the Coast Guard.

(f) The facility must maintain data sheets and test equipment lists for all inspections and tests of devices. These must be in sufficient detail for complete verification and evaluation of the operations and objectives, including:

(1) The date and name of the test, the name of the supervising engineer, the manufacturer and description of the test device;

(2) A detailed explanation of the results of each phase of tests and any unusual occurrences; and

(3) The signature of the technician who performs each test.

(g) The facility must maintain a list of the test equipment that it uses and the date of the last calibration of that equipment.

(h) The facility must maintain and document a calibration program and ensure the degree of accuracy as follows:

(1) The accuracy of all measurement instrument standards must be traceable to the primary standards of the National Bureau of Standards. This traceability may be through reference standards that are certified for accuracy and stability by the National Bureau of Standards.

(2) The normal accuracy of the reference standard must be at least four times as great as that of the facility's instrument that is being calibrated. All equipment must be calibrated at least once a year or in accordance with the recommended schedule of the instrument manufacturer of the National Bureau of Standards.

(3) The facility must maintain documentation of the calibration standards and test equipment.

(4) If the facility performs its own calibration, it must maintain written calibration procedures, maintenance information, a record of the values that are recorded during calibration, and the standards and equipment that are used for the calibration.

(5) If the facility does not perform its own calibration, it is responsible for the accuracy of the calibrations.

(i) The facility must have no conflict of interest. The Coast Guard's determination on the conflict of interest questions is final. Except as provided in paragraph (j) of this section, conflict of interest is defined as follows:

(1) The loss or award of a specific contract to test marine sanitation devices is not a substantial factor for the financial well being of the facility;

(2) The facility's personnel are free of the influence or control of manufacturers, suppliers, or vendors; and

(3) The facility is not involved in the promotion of a marine sanitation device.

(j) If the uniqueness or size of a device requires testing by a facility that may not meet all the criteria for conflict of interest in paragraph (i) of this section, a manufacturer may apply to the Commandant (G-MMT/82), U.S. Coast Guard Washington, D.C. 20590 to allow the facility to conduct the testa.

(k) If a recognized facility subcontracts for any testing, it must apply to the Commandant (G-MMT/82), U.S. Coast Guard, Washington, D.C. 20590 for authorization and include the justification for the subcontracting. The recognized facility is responsible for the accuracy and completeness of all tests by a subcontractor.

(Sec. 312(b)(1), 86 Stat. 871 (33 U.S.C. 1322 (b)(1); 49 CFR 1.45(b) and 1.46 (l) and (m)))

Effective date. This amendment is effective on January 30, 1975.

Dated: January 27, 1975.

O. W. SILER,
Admiral, U.S. Coast Guard,
Commandant.

[FR Doc.75-2852 Filed 1-29-75;8:45 am]

federal register

THURSDAY, JANUARY 29, 1976

PART II:

ENVIRONMENTAL PROTECTION AGENCY

■

MARINE SANITATION DEVICES

Standards of Performance

JRB Associates, Inc.

Title 40—Protection of Environment

[FRL 480-8]

CHAPTER I—ENVIRONMENTAL PROTECTION AGENCY

SUBCHAPTER D—WATER PROGRAMS

PART 140—MARINE SANITATION DEVICE STANDARD

Performance Standards

These regulations replace 40 CFR 140 and establish Federal standards of performance for marine sanitation devices as initially required by section 13 of the Federal Water Pollution Control Act, as amended, 33 U.S.C. 1163.

The Administrator of the Environmental Protection Agency (EPA) on June 23, 1972, promulgated Federal standards of performance for marine sanitation devices (40 CFR 140), which provided for no overboard discharge of sewage into the navigable waters of the United States. An incentive provision was included in the regulation, stating that boat owners who install on existing vessels a device providing certain specified primary treatment and disinfection, prior to the effective date of the standards, would be considered to be in compliance with the standards for a period of time after the effective date. Permitting the installation of primary treatment devices was done to obtain the maximum amount of immediate pollution abatement during the period required for the widespread installation of pump-out facilities.

In October 1972 the Federal Water Pollution Control Act (the Act) was extensively amended. Section 13 was carried over into section 312 of the Act, as amended, with no substantial changes other than revisions to section 312(f). Revised language in section 312(f) of the Act addressed actions that the Administrator must consider in allowing for the complete prohibition of vessel discharge in certain specified waters in response to applications for such prohibition by States. Section 312(f)(2) provides for early preemption of existing State laws when a vessel becomes in compliance with Federal standards and regulations. Under this section, a vessel equipped with a marine sanitation device which met the standards created by the Act and the regulations thereunder, after January 30, 1975 (the date on which the initial standards and regulations were promulgated, see the following paragraph) and before the compliance deadlines for new and existing vessels, would be in compliance with Federal law. This would include vessels meeting the incentive provisions discussed above. Section 312(f)(3) provides that if a State determines that the protection and enhancement of the quality of some or all of the waters within such State require greater environmental protection than the Federal standards provide, the State may completely prohibit the discharge of vessel sewage if the Administrator determines that adequate facilities for pump out and treatment of vessel sewage from all vessels are reasonably available. Section 312(f)(4) provides that the Administrator may, by regulation, prohibit vessel discharge in order to protect and enhance the quality of specified waters.

It is noted that section 312(f) of the Act provides mechanisms whereby an individual State can achieve a no-discharge standard for some or all of its waters. Under section 312(f)(3) a State may enforce its no-discharge regulations upon the Administrator's finding that adequate pump-out and treatment facilities are reasonably available for all vessels using such waters. A petition by a State and a subsequent determination by the Administrator that adequate facilities for the safe and sanitary removal and treatment of sewage from all vessels are reasonably available for the subject waters permits the State, through its regulations prohibiting the overboard discharge of sewage to preempt Federal marine sanitation device standards for the specified waters. Under section 312(f)(4) certain sensitive waters, such as marinas, drinking water intakes, areas of intensive primary water contact recreation, and shellfish beds, may be made no-discharge waters by EPA regulation if it is determined that the protection and enhancement of the quality of such waters require such protection. Petitions under section 312(f)(3) and section 312(f)(4) have been received from several States and the Agency has taken action on such petitions following publication of notices of their receipt and appropriate periods for public comment. Such actions have been taken since section 312(f)(2) provides for an immediate effective date of compliance with Federal marine sanitattion device standards for any vessel complying with the Federal treated effluent discharge portion of the standard after January 30, 1975 and before the statutory compliance deadlines for new and existing vessels.

Interested parties were notified of the opportunity to participate in this rule making proceeding by a notice of proposed rule making published in the FEDERAL REGISTER on October 10, 1975 (40 FR 47972). Approximately 140 comments were reecived. Except as noted and discussed in the following paragraphs, the proposed regulations have been adopted without substantive changes.

Comment letters were received from approximately 56 individuals supporting the proposed marine sanitation device standard and from approximately 40 individuals criticizing the proposed standard. A substantial number of those criticizing the proposed standard were from the Great Lakes area.

One comment suggested that the word "volatile" be inserted before "suspended solids" in the last sentence under § 140.3(d). The testing procedure as it is conducted by the U.S. Coast Guard provides for a net suspended solids determination and the change was not believed necessary.

Comments were received that a definition of the term "navigable waters" should be added to the regulation because of confusion relating to the use of the term in § 140.3. The word "navigable" has been deleted in favor of language in Pub. L. 92-500, which defines the waters to which this regulation applies.

One commenter stated that the proposed revision in the marine sanitation device standard was inconsistent with its alleged rationale in that the preamble to the proposed rule making stressed that the water bodies requiring the highest degree of protection are those with relatively long detention periods, whereas the discriminator for the standard is the ability for ingress or egress rather than detention time. The letter points out that Lake Michigan has a detention period of many years. Admittedly, there are environmental exceptions to almost every rule. As a general thesis, the Agency does not believe that the statements contained in the preamble to the proposed rule are inaccurate. The majority of inland lakes where ingress and egress by vessels subject to this regulation are impossible have long detention periods. Exceptions to such a statement are the Great Lakes. However, the Agency at the present time has not been made aware of sufficient water quality problems which would dictate making the entire Great Lakes chain subject to a no-discharge standard.

Several commenters recommended that provision be made for State laws or regulations which are more stringent than the Federal standard to remain in force. Such action would be contrary to the provisions of § 312 of Pub. L. 92-500 and such section clearly provides that State no-discharge laws may prevail when appropriate action is taken under § 312(f).

One comment was received that § 140.5 be revised to show that analytical methods which are to be used to show compliance to this regulation be those methods promulgated by the Administrator in 40 CFR 136, "Guidelines Establishing Test Procedures for the Analysis of Pollutants." This change would provide uniformity in testing procedures among all EPA regulations and § 140.5 has been modified to accommodate the suggested change.

Table 1 provides a summary of the Federal marine sanitation device standard as it is being promulgated.

TABLE 1.—*Summary of marine sanitation device standard*

Type of water	Vessel type	Must be equipped with a—	Except when the vessel is equipped—
No discharge. Freshwaters not subject to ingress or egress by vessel traffic or navigation by interstate vessel traffic.	Existing. A vessel whose construction was initiated before Jan. 30, 1975.	Coast Guard certified no-discharge type device or a Coast Guard certified discharge type device which is secured to prevent the discharge of sewage on and after Jan. 30, 1980.	On or before the date of promulgation of this regulation with a Coast Guard certified discharge type device from which the effluent will not have a fecal coliform bacterial count of greater than 1,000/100 ml nor visible floating solids. Such a discharge type device may be used for its operable life.
	New. A vessel whose construction was initiated on or after Jan. 30, 1975.	Coast Guard certified no-discharge type device or a Coast Guard certified discharge type device which is secured to prevent the discharge of sewage on and after Jan. 30, 1977.	Do.
Treated effluent waters, including coastal waters, estuaries, the Great Lakes, freshwaters accessible through locks or navigable for interstate vessel traffic.	Existing. A vessel whose construction was initiated before Jan. 30, 1975.	Coast Guard certified discharge type device from which effluent will not have a fecal coliform bacterial count of greater than 1,000/100 ml nor visible floating solids on Jan. 30, 1980. On and after Jan. 31, 1980, the effluent from Coast Guard certified discharge type devices shall not have a fecal coliform bacterial count of greater than 200/100 ml not suspended solids greater than 150 mg/l.	On or before Jan. 30, 1978, with any Coast Guard certified discharge type device; that device may be used for its operable life. A Coast Guard certified discharge type device designed to produce effluent with a fecal coliform bacterial count not greater than 1,000/100 ml and no visible floating solids installed after Jan. 30, 1978, must be replaced by Jan. 31, 1980. The replacement device must be a discharge device of the type required on and after Jan. 31, 1980.
	New. A vessel whose construction was initiated on or after Jan. 30, 1975.	Coast Guard certified discharge type device from which effluent will not have a fecal coliform bacterial count of greater than 1,000/100 ml nor visible floating solids on Jan. 30, 1977. On and after Jan. 31, 1980, the effluent from Coast Guard certified discharge type devices shall not have a fecal coliform bacterial count of greater than 200/100 ml nor suspended solids greater than 150 mg/l.	Before Jan. 31, 1980, with a Coast Guard certified discharge type device from which the effluent will not have a fecal coliform bacterial count of greater than 1,000/100 ml nor visible floating solids. Such a discharge type device may be used for its operable life.

In consideration of the foregoing, Title 40, Part 140 of the Code of Federal Regulations is revised to read as follows:

Sec.
140.1 Definitions.
140.2 Scope of Standard.
140.3 Standard.
140.4 Complete prohibition.
140.5 Analytical procedures.

AUTHORITY: The provisions of this Part 140 are issued under sec. 312, as added October 18, 1872, Pub. L. 92-500 § 2, 86 Stat. 871. Interpret or apply sec. 312(b)(1), 33 U.S.C. 1322(b)(1).

§ 140.1 Definitions.

For the purpose of these standards the following definitions shall apply:

(a) "Sewage" means human body wastes and the wastes from toilets and other receptacles intended to receive or retain body wastes;

(b) "Discharge" includes, but is not limited to, any spilling, leaking, pumping, pouring, emitting, emptying, or dumping;

(c) "Marine sanitation device" includes any equipment for installation onboard a vessel and which is designed to receive, retain, treat, or discharge sewage and any process to treat such sewage;

(d) "Vessel" includes every description of watercraft or other artificial contrivance used, or capable of being used, as a means of transportation on waters of the United States;

(e) "New vessel" refers to any vessel on which construction was initiated on or after January 30, 1975;

(f) "Existing vessel" refers to any vessel on which construction was initiated before January 30, 1975;

(g) "Fecal coliform bacteria" are those organisms associated with the intestines of warm-blooded animals that are commonly used to indicate the presence of fecal material and the potential presence of organisms capable of causing human disease.

§ 140.2 Scope of Standard.

The standard adopted herein applies only to vessels on which a marine sanitation device has been installed. The standard does not require the installation of a marine sanitation device on any vessel that is not so equipped. The standard applies to vessels owned and operated by the United States unless the Secretary of Defense finds that compliance would not be in the interest of national security.

§ 140.3 Standard.

(a)(1) In freshwater lakes, freshwater reservoirs or other freshwater impoundments whose inlets or outlets are such as to prevent the ingress or egress by vessel traffic subject to this regulation, or in rivers not capable of navigation by interstate vessel traffic subject to this regulation, marine sanitation devices certified by the U.S. Coast Guard (see 33 CFR 159, published in 40 FR 4622, January 30, 1975), installed on all vessels shall be designed and operated to prevent the overboard discharge of sewage, treated or untreated, or of any waste derived from sewage. This shall not be construed to prohibit the carriage of Coast Guard-certified flow-through treatment devices which have been secured so as to prevent such discharges.

(2) In all other waters, Coast Guard-certified marine sanitation devices installed on all vessels shall be designed and operated to either retain, dospose of, or discharge sewage. If the device has a discharge, subject to paragraph (d) of this section, the effluent shall not have a fecal coliform bacterial count of greater than 1,000 per 100 milliliters nor visible floating solids. Waters where a Coast Guard-certified marine sanitation device permitting discharge is allowed include coastal waters and estuaries, the Great Lakes and inter-connected waterways, fresh-water lakes and impoundments accessible through locks, and other flowing waters that are navigable interstate by vessels subject to this regulation.

(b) This standard shall become effective on January 30, 1977 for new vessels and on January 30, 1980 for existing vessels (or, in the case of vessels owned and operated by the Department of Defense, two years and five years, for new and existing vessels, respectively, after promulgation of implementing regulations by the Secretary of Defense under section 312(d) of the Act).

(c) Any vessel which is equipped as of the date of promulgation of this regulation with a Coast Guard-certified flow-through marine sanitation device meeting the requirements of paragraph (a)(2) of this section, shall not be required to comply with the provisions designed to prevent the overboard discharge of sewage, treated or untreated, in paragraph (a)(1) of this section, for the operable life of that device.

(d) After January 30, 1980, subject to paragraphs (e) and (f) of this section, marine sanitation devices on all vessels on waters that are not subject to a prohibition of the overboard discharge of sewage, treated or untreated, as specified in paragraph (a)(1) of this section, shall be designed and operated to either retain, dispose of, or discharge sewage, and shall be certified by the U.S. Coast Guard. If the device has a discharge, the effluent shall not have a fecal coliform bacterial count of greater than 200 per 100 milliliters, nor suspended solids greater than 150 mg/l.

(e) Any existing vessel on waters not subject to a prohibition of the overboard discharge of sewage in paragraph (a)(1) of this section, and which is equipped with a certified device on or before January 30, 1978, shall not be required to comply with paragraph (d) of this section, for the operable life of that device.

(f) Any new vessel on waters not subject to the prohibition of the overboard discharge of sewage in paragraph (a)(1) of this section, and on which construction is initiated before January 31, 1980, which is equipped with a marine sanitation device before January 31, 1980, certified under paragraph (a)(2) of this section, shall not be required to comply with paragraph (d) of this section, for the operable life of that device.

(g) The degrees of treatment described in paragraphs (a) and (d) of this section are "appropriate standards" for purposes of Coast Guard and Department of Defense certification pursuant to section 312(g)(2) of the Act.

(h) This section is not to be construed to accelerate the effective date of the standards and regulations promulgated under section 312 as such date affects the sales regulations for marine sanitation devices specified in section 312(g)(1): January 30, 1977, and January 30, 1980, for new and existing vessels, respectively.

§ 140.4 Complete prohibition.

(a) A State may completely prohibit the discharge from all vessels of any sewage, whether treated or not, into some or all of the waters within such State by making a written application to the Administrator, Environmental Protection Agency, and by receiving the Administrator's affirmative determination pursuant to section 312(f)(3) of the Act. Upon receipt of an application under section 312(f)(3) of the Act, the Administrator will determine within 90 days whether adequate facilities for the safe and sanitary removal and treatment of sewage from all vessels using such waters are reasonably available. Applications made by States pursuant to section 312(f)(3) of the Act shall include: (1) a certification that the protection and enhancement of the waters described in the petition require greater environmental protection than the applicable Federal standard; (2) a map showing the location of commercial and recreational pump-out facilities; (3) a description of the location of pump-out facilities within waters designated for no discharge; (4) the general schedule of operating hours of the pump-out facilities; (5) the draught requirements on vessels that may be excluded because of insufficient water depth adjacent to the facility; (6) information indicating that treatment of wastes from such pump-out facilities is in conformance with Federal law; and (7) information on vessel population and vessel usage of the subject waters.

(b) A State may make a written application to the Administrator, Environmental Protection Agency, under section 312(f)(4) of the Act, for the issuance of a regulation completely prohibiting discharge from a vessel of any sewage, whether treated or not, into particular waters of the United States or specified portions thereof, which waters are located within the boundaries of such State. Such application shall specify with particularly the waters, or portions thereof, for which a complete prohibition is desired. The application shall include identification of water recreational areas, drinking water intakes, aquatic sanctuaries, identifiable fish-spawning and nursery areas, and areas of intensive boating activities. If, on the basis of the State's application and any other information available to him, the Administrator is unable to make a finding that the waters listed in the application require a complete prohibition of any discharge in the waters or portions thereof covered by the application, he shall state the reasons why he cannot make such a finding, and shall deny the application. If the Administrator makes a finding that the waters listed in the application require a complete prohibition of any discharge in all or any part of the waters or portions thereof covered by the State's application, he shall publish notice of such findings together with a notice of proposed rule making, and then shall proceed in accordance with 5 U.S.C. 553. If the Administrator's finding is that applicable water quality standards require a complete prohibition covering a more restricted or more expanded area than that applied for by the State, he shall state the reasons why his finding differs in scope from that requested in the State's application.

§ 140.5 Analytical procedures.

In determining the composition and quality of effluent discharge from marine sanitation devices, the procedures contained in 40 CFR 136, "Guidelines Establishing Test Procedures for the Analysis of Pollutants," or subsequent revisions or amendments thereto, shall be employed.

Dated: January 21, 1976.

JOHN QUARLES,
Acting Administrator.

[FR Doc.76-2490 Filed 1-28-76;8:45 am]

JRB Associates, Inc.

[4910-14]

DEPARTMENT OF TRANSPORTATION

Coast Guard

[CGD 77-216]

MARINE SANITATION DEVICES

Waiver of the Type I MSD Installation Date

On November 11, 1977, the Commandant of the U.S. Coast Guard with the concurrence of the Administrator of the Environmental Protection Agency (EPA) waived the applicability of §§ 159.5(c)(2) and 159.7(c)(2) of the Marine Sanitation Device (MSD) regulations. This waiver was granted under the authority of section 312(c)(2) of the Federal Water Pollution Control Act, which empowers the Secretary of Transportation, who has delegated this authority to the Commandant, to waive the applicability of any standards and regulations after consultation with the Administrator of the EPA. The applicable provisions of this waiver are as follows:

If a firm commitment for the purchase and placement of a Type I MSD in an existing vessel is made prior to January 30, 1978, but difficulties are encountered in achieving placement of the device in the existing vessel; and placement of the device, in operable condition, is accomplished by January 30, 1979, the existing vessel will be deemed to have the MSD "installed" by January 30, 1978, and therefore be equipped with the device so as to be in compliance with 33 CFR Part 159 and 40 CFR Part 140.

This waiver allows an owner or operator of an existing vessel who orders a Type I MSD by January 30, 1978, and installs it in an operable condition by January 30, 1979, to have that device considered installed by January 30, 1978, for the purpoe of the incentive provisions in §§ 159.5(c)(2) and 159.7(c)(2). Any owner of an existing vessel who complies with this waiver provision will be allowed to operate his vessel after January 30, 1980, with an installed, operable Type I MSD instead of the Type II or III MSD's that would otherwise be required.

The owner or operator must have a purchase order, purchase agreement, or other evidence of a firm commitment from an MSD manufacturer or distributor, which is dated on or before January 30, 1978. Evidence of this commitment must be kept on the vessel or otherwise be readily available upon request from any Coast Guard boarding officer as long as the Type I device remains installed.

The Coast Guard considers this waiver necessary because sufficient numbers of Type I MSD's appropriate for smaller vessels have only recently become available. There is also a backlog of production and delivery of Type I MSD's and yard availability is limited, making timely installation difficult.

A list of Coast Guard certified Type I MSD's follows.

JRB Associates, Inc.

Reproduced from best available copy.

[4910-14]

DEPARTMENT OF TRANSPORTATION

Coast Guard

[CGD 78-059]

MARINE SANITATION DEVICES

Waiver of Certain Requirements for Vessels of 65 Feet in Length or Less

Discussions have been held between the Coast Guard and the Environmental Protection Agency (EPA) concerning the problems of marine sanitation devices (MSD's) on small vessels with installed toilet facilities. The technology for Type II MSD's has not developed so that acceptable MSD's are available for vessels 65 feet in length or less. Only one Type II device for these vessels is currently certified and this device is not suitable for many small vessels because of space limitations. Type III devices require pumpout facilities, the number of which remain inadequate.

As a result of the discussions the two agencies agreed to take the following steps:

(a) The Coast Guard will undertake research to promote the continued development of Type II MSD's for small vessels.

(b) The EPA will review and consider revision of the Standards of Performance for Marine Sanitation Devices, 40 CFR part 140, as they pertain to vessels of 65 feet in length or less.

(c) The Coast Guard will waive the applicability of certain requirements in 40 CFR part 140 and 33 CFR part 159 for vessels of 65 feet in length or less. These vessels may continue to install Type I MSD's.

Although small vessels are not the major source of sewage pollution of U.S. navigable waters, their sheer numbers necessitate some control over that source of sewage pollution. A reasonable regulatory program for control of vessel sewage pollution must take account of the realities of available control technology, as well as the continuing lack of an adequate number of pumpout facilities.

Therefore, the Commandant of the Coast Guard, after consultation with the Administrator of EPA, is granting a waiver allowing continued installation of Type I MSD's on new and existing vessels 65 feet in length or less with installed toilet facilities. This waiver is authorized by section 312(c)(2) of the Federal Water Pollution Control Act (33 U.S.C. 1322(c)(2)). When the Commandant determines that adequate Type II devices are available for use by small vessels, and after reasonable advance notice, this waiver will be terminated. A vessel which has installed a Type I device prior to the termination data will be permitted to use it for the operable life of the device.

MSD regulations for vessels with installed toilet facilities are contained in 33 CFR 159.5 and 159.7. The performance standards for these devices are contained in 40 CFR 140.3

Vessels on which construction was started on or after January 30, 1975 (new vessels), must have a certified MSD. This requirement is not affected by the waiver.

The regulations would have required vessels manufactured after January 30, 1980, to have a Type II or III MSD. New vessels manufactured prior to this date would have been permitted to use a Type I MSD only if the MSD was installed before January 31, 1980. The Commandant is waiving these requirements.

Vessels on which construction was started prior to January 30, 1975 (existing vessels), must have a certified MSD by January 31, 1980. This requirement is not affected by this waiver.

For existing vessels, present regulations would have required installation of either a Type II or III MSD to meet the January 31, 1980, deadline. A Type I MSD would have been accepted on an existing vessel only if it had been installed before January 31, 1978 (extended by a previous Coast Guard waiver, (November 28, 1977, 42 FR 60619)). The Commandant waives these requirements.

The MSD requirements for vessels of 65 feet in length or less with installed toilet facilities which remain in effect under the waiver are as follows:

All vessels of 65 feet in length or less with installed toilet facilities must install a certified Type I, II, or III MSD. This requirement is effective now for new vessels. This requirement is effective on January 31, 1980, for existing vessels (vessel length is determined by 46 CFR 24.10-17(b)).

The Commandant is waiving the applicability of 33 CFR 159.5(b) and 159.7(b) to new vessels of 65 feet in length or less. The Commandant is also waiving the applicability of the dates in 159.5(c)(2) and 159.7(c)(2) to existing vessels. Finally, the applicability of 40 CFR 140.3(d) to vessels of 65 feet in length or less is also waived.

The waiver is as follows: This waiver applies only to vessels 65 feet in length or less, that have installed toilet facilities. (Vessel length is determined by 46 CFR 24.10-17(b).) Type I MSD's may be installed in new or existing vessels. New or replacement MSD installations after January 30, 1980 may be Type I, II, or III.

NOTE.—This waiver is not applicable to vessels over 65 feet in length. All MSD standards and regulations in 40 CFR 140 and 33 CFR 159 still apply to these vessels. All new or replacement MSD installations on these vessels after January 30, 1980 must be Type II or III.

Dated: July 5, 1978.

J. B. HAYES,
Admiral, U.S. Coast Guard
Commandant.

[FR Doc. 78-18885 Filed 7-7-78; 8:45 am]

JRB Associates, Inc.

APPENDIX E

SUMMARY OF STATE LAWS GOVERNING WASTE DISPOSAL FROM WATERCRAFT

Part A: 1971 U.S. Summary

Part B: 1981 U.S. Summary

Part C: Overview of Marine Sanitation Regulations of the Province of Ontario, Canada

Part A: 1971 Summary

1971 SUMMARY OF STATE LAWS GOVERNING WASTE DISPOSAL FROM WATERCRAFT

This information was originally presented as Appendix III in the 1971 report, Treatment and Disposal of Vessel Sanitary Wastes - A Synthesis of Current Information, prepared by the Panel on Treatment and Disposal of Sanitary Wastes, Maritime Information Committee, Division of Engineering, National Research Council, National Academy of Sciences. The conclusion to the original introductory paragraph is repeated here:

"Although these laws and regulations are subject to change and varying degrees of enforcement the following summary is indicative of state action as of 22 February 1971:"

Alabama - No regulations relating specifically to marine waste disposal. Regulations being prepared; not yet promulgated.

Alaska - No laws relating specifically to marine waste disposal.

Arizona - No watercraft equipped with a marine toilet shall be operated as to discharge sewage into water. Holding tanks are permitted where adequate dockside disposal facilities are available.

Arkansas - Any boat with sleeping accommodations or intended for overnight occupancy must be equipped with a marine toilet and sewage treating device or other approved system of sewage disposal. Treating devices must produce an effluent having a coliform count of 240 or less per 100 ml.

California - No vessel equipped with a toilet may be operated in waters of any lake, reservoir or fresh water impoundment unless it is so designed that no sewage can be discharged into water.

Colorado - No vessel equipped with a water closet may be operated unless water closet is incapable of discharging directly into water.

Connecticut - No laws relating specifically to marine waste disposal.

District of Columbia - The discharge of wastes from any vessel at berth is prohibited.

Delaware - No laws relating specifically to marine waste disposal.

Florida - No laws relating specifically to marine waste disposal.

Georgia - Law requires suitable treatment device on all watercraft equipped with marine toilets. Suitable treatment devices include chlorinator-macerators and holding tanks.

Hawaii - Regulations prohibit discharge of sewage (a) into waters within the confines of a small boat harbor, or, (b) into waters of the state from a vessel within one-half mile from its shores unless it is adequately treated to prevent pollution.

Idaho - No laws relating specifically to marine waste disposal.

Illinois - Law permits only the use of holding tanks, incinerator devices, and other devices that will prevent pollution.

Indiana - Law prohibits the operation of toilets on boats in Indiana waters. Department policy permits the use of holding tanks and incinerators.

Iowa - No laws relating specifically to marine waste disposal.

Kansas - The Department of Health provides a certification program for marine toilets located on watercraft operating on impoundments managed by the Corps of Engineers; a chlorinator-macerator is required for certification.

Kentucky - State regulations require approved treatment devices on boats equipped with toilets. Only approved devices are holding tanks or incinerators.

Louisiana - No specific regulations covering disposal of watercraft wastes. State sanitary code prohibits discharge of untreated sanitary wastes. Watercraft engaged in shellfish operations are required to have adequate sanitary treatment facilities.

Maine - No laws relating specifically to marine waste disposal.

Maryland - No laws relating specifically to marine waste disposal.

Massachusetts - Existing legislation prohibits discharge of wastes from any sources which would violate the approved Water Quality Standards. No regulations, however, have been established.

Michigan - No watercraft equipped with a marine toilet may be operated unless it is equipped with (a) a holding tank, (b) an incinerating device, or, (c) self-contained marine toilet.

Minnesota - Minnesota has "no discharge" law for pleasure craft.

Mississippi - No laws relating specifically to marine waste disposal.

Missouri - Law provides that any boat equippped with a marine toilet must have a treatment device capable of producing an effluent meeting the following minimum standards: (a) be free of unsightly floating solids; (b) have a coliform density not exceeding 240 per 100 ml; (c) have a substantial chlorine residual present in the effluent at all times. The law does not apply to boats engaged in interstate commerce on Missouri or Mississippi Rivers.

Montana - State standards require holding tanks, incinerators, or flow-through treatment devices.

Nebraska - Law requires that boats equipped with toilet facilities treat wastes in manner which will prevent water pollution.

Nevada - Law requires that every vessel equipped with a marine toilet be operated so that inadequately treated sewage is not discharged into water. Macerator/chlorinator is permitted.

New Hampshire - Holding tanks is the only approved method of collection and disposal of sewage from watercraft.

New Jersey - No regulations relating specifically to marine waste disposal.

New Mexico - No laws relating specifically to marine waste disposal.

New York - No watercraft equipped with a marine toilet may operate unless it is equipped with a treatment device producing an effluent meeting the following standards: (a) be free of floating solids; (b) have a BOD not more than 50 ppm; (c) have not more than 50 ppm suspended solids; (d) have a coliform count number not in excess of 50/100 ml.

North Carolina - Requires a treatment device capable of producing an effluent free of unsightly solids and having a coliform count of 1000 or less /100 ml.

North Dakota - State Health Department must approve the type of waste treatment facilities to be installed on boats.

Ohio - State Code prohibits use of marine toilets except on main stem of Ohio River, Muckingum River and Lake Erie. Legislation has been introduced in the General Assembly that will permit the use of any device approved by the State Health Department.

Oklahoma - State Board of Health has prohibited the use of marine toilets on lakes and reservoirs below a certain size. On waters where marine toilets are permitted, the boat must be equipped with either a holding tank or a chlorinator/macerator capable of producing an effluent containing a most probable number (MPN) of coliform bacteria not in excess of 240 per 100 ml.

Oregon - Sewage must be treated in a manner approved by the State Board of Health and the State Sanitary Authority. The Oregon State Marine Board requires that sewage from watercraft in eight lakes in Deschutes County must be rendered harmless prior to discharge.

Pennsylvania - No laws relating specifically to marine waste disposal.

Rhode Island - No laws relating specifically to marine waste disposal.

South Carolina - No laws relating specifically to marine waste disposal.

South Dakota - Requires a treatment device capable of producing an effluent free of unsightly solids and having a coliform count of 240 or less /100 ml.

Tennessee - Regulations require that treatment devices must be used in conjunction with marine toilets. Effluent must be free of unsightly floating solids and must have coliform count not to exceed 240 per 100 ml.

Texas - Law requires boats equipped with a marine toilet to have a holding tank.

Utah - Law prohibits discharge of untreated sewage from vessels. Holding tanks, incinerators or chlorinator/macerators are acceptable.

Vermont - No specific law against pollution from vessels. However, macerator/chlorinators are not considered adequate.

Virginia - No regulations relating specifically to marine waste disposal.

Washington - No laws relating specifically to marine waste disposal. Legislation being considered. Holding tanks and no discharge.

West Virginia - No laws relating specifically to marine waste disposal.

Wisconsin - Law requires the use of a holding tank to prevent the discharge of sewage from watercraft.

Wyoming - No laws relating specifically to marine waste disposal.

Part B: 1981 Summary

1981 SUMMARY OF STATE LAWS GOVERNING WASTE DISPOSAL FROM WATERCRAFT

The following information was compiled from the following sources:

-Bertges, W.C., Recreational Vessel Waste Pollution, Appendix I, U.S. Coast Guard, NTIS #AD/A-000-453, June, 1974.

-The Boating Industry Association. Summary of state laws governing watercraft waste disposal. Reprinted by Thetford Corporation.

-Notices of EPA actions on State vessel petitions

-Discussions with State Boating Law Administrators and other State personnel familiar with MSD regulations.

Alabama - No regulations relating specifically to marine waste disposal. No MSD regulations anticipated in the near future.

Alaska - No regulations relating specifically to marine waste disposal or MSDs.

Arizona[1] - No watercraft equipped with a marine toilet shall be operated as to permit sewage to be discharged directly into the waters of the State. Holding tanks (approved type storage containers) shall be allowed where adequate dockside disposal facilities are provided.

Arkansas - Any boat with sleeping accomodations or intended for overnight occupancy must be equipped with a marine toilet and sewage treating device or other approved system of sewage disposal. Treating devices must produce an effluent having a coliform count of 240 or less per 100 ml. Portable toilets are not allowed.

California[1,2] - State requirements are the same as Federal. State has standards to establish criteria for the design, construction, operation and maintenance of pump-out facilities for the removal of sewage from holding tanks. EPA approved "no discharge" zones established for Upper and Lower Newport Bays, Sunset Bay inland of the Pacific Coast Highway Bridge, Huntington Harbor, portions of San Diego Bay less than 30 feet deep at mean low water, Mission Bay, Oceanside Harbor, Dana Point Harbor, Lake Tahoe (jointly with Nevada), Channel Islands Harbor, Oxnard, and Avalon Harbor, Santa Catalina Island.

Colorado[1] - No vessel equipped with an MSD may be operated unless such water closet is self-contained and incapable of discharging directly into the water.

Connecticut - No laws relating specifically to marine waste disposal or MSDs.

Delaware - No laws relating specifically to marine waste disposal.

District of Columbia - The discharge of wastes from any vessel at berth is prohibited.

Florida - No laws relating specifically to marine waste disposal.

Georgia[1] - Law requires suitable treatment device (MSD) on all watercraft equipped with marine toilets. All discharges from MSDs into waters of State must be in compliance with the Federal standards of performance and regulations for MSDs.

[1] Hawaii - Regulations prohibit discharge of sewage (a) into waters within the confines of a small boat harbor, or (b) into waters of the State from a vessel within three miles from its shores, unless it is adequately treated to prevent pollution.

Idaho - No laws relating specifically to MSDs, but prohibit any discharge of waste into waters of the State regardless of the source.

Illinois - Only holding tanks, incinerator devices, and other devices that prevent direct discharge are permitted.

Indiana - All vessels with toilets must have holding tanks or incinerators. Portable toilets are also permitted.

[1] Iowa - Only a very old law that prohibits the discharge of garbage and other debris into the waters of the State. No law relating specifically to MSDs.

[1] Kansas - After State Department of Health determines that adequate on-shore facilities for receiving and treating marine sewage are available, no vessel may be operated that has a toilet which discharges sewage to other than an on-shore receiving and treating facility. It is unlawful to discharge (into or near the waters of the State) any receptacle containing sewage. Vessels registered outside of Kansas must be in compliance with all applicable State and Federal marine toilet requirements applicable and associated with the vessel registration.

[1] Kentucky - Adopted the United States Coast Guard regulations governing the design, construction, installation and operation of MSDs as issued and amended.

Louisiana - State sanitary code prohibits discharge of untreated sanitary wastes. Watercraft engaged in shellfish operations are required to have adequate sanitary treatment facilities.

[1] Maine - Discharge of sewage, garbage or other waste material from watercraft is prohibited on inland waters of the State. Holding tanks or suitable containers are required on watercraft having a permanently installed sanitary waste disposal system and which are operated on inland waters of the State.

[1] Maryland - No laws relating specifically to MSDs or marine sewage disposal, except for a special regulation applicable only to Deep Creek Lake, Garrett Co. This regulation prohibits the discharge of garbage, sewage, or other like waste material into the Lake from any vessel.

Massachusetts - Existing legislation prohibits discharge of wastes from any sources which would violate the approved Water Quality Standards. No regulations, however, have been established.

[1,2] Michigan - No discharge of garbage, litter, sewage or oil is allowed from any recreational or commercial watercraft into the waters of the State. Watercraft equipped with marine toilets must have holding tanks or self-contained marine

toilets or incinerating devices. EPA approved "no discharge" zones for the Michigan waters of Lakes Michigan, Huron, Superior, Erie, and St. Clair, all waterways connected thereto, and all inland lakes.

1,2
Minnesota - No person shall discharge into the waters of the State, directly or indirectly from watercraft, any sewage or other wastes. Marine toilets must be equipped with a retention device acceptable to the pollution control agency. Coast Guard certified portable toilets may be used. EPA approved "no discharge" areas for the Mississippi River from Hastings, Minn. to the Coon Rapids Dam, the Minnesota River from its mouth to Shakopee, Minn., and for the Boundary Waters Canoe Area.

Mississippi - Some specific areas, e.g. oyster reefs, have no discharge regulations.

1,2
Missouri - State law required no discharge for all waters of State. EPA approved "no discharge" zones for the waters of the State with the exception of the western portion of Bull Shoals Lake, and the Missouri and Mississippi Rivers.

1
Montana - Discharge of waste from vessel prohibited. Vessels equipped with a galley or toilet shall have a wastewater holding system sealed to prevent discharge, whether treated or untreated.

Nebraska - State law prohibits dumping of waste material into or near waters of the State. Also, law requires that boats equipped with toilet facilities treat wastes in a manner which will prevent water pollution.

1,2
Nevada - Every boat equipped with a marine toilet must be operated so that inadequately treated sewage is not discharged into the waters of the State. EPA approved "no discharge" zone for the Nevada waters of Lake Tahoe (jointly with California).

1,2
New Hampshire - Discharge of waste from watercraft prohibited on inland waters of the State, i.e. holding tanks only. Tidal estuaries excluded from law. EPA approved "no discharge" zones for all inland waters of the State, excluding all tidal waters.

New Jersey - Marine toilets must be sealed off (i.e. discharge prevented) on freshwater lakes. Also no discharge in dockage areas or near established bathing beaches.

1,2
New Mexico - Water closet on vessel must be self-contained and incapable of discharging directly into the water. EPA approved "no discharge" zone for all waters of the State.

[2] New York - State laws required no discharge, i.e. holding tanks. EPA approved "no discharge" zones for Lake George and the New York waters of Lake Champlain.

[1] North Carolina - Vessels on inland lakes or inland fishing waters which are equipped with marine toilets must also be equipped with a holding tank or sewage treatment device approved by State Board of Health, or must have discharge fittings sealed or capped to prevent discharge into the water.

[1] North Dakota - No person shall discharge any untreated sewage into waters of the State. Marine toilet must be equipped with a treatment device meeting standards established by the state water pollution control board.

[1] Ohio - State law requires holding tanks on any watercraft with a sink, toilet or sanitary system.

[1] Oklahoma - State Department of Health has prohibited the use of marine toilets on reservoirs below a minimum size. On waters where marine toilets are permitted, the boat must be equipped with either a holding tank or a chlorinator-macerator capable of producing an effluent with an MPN of not more than 240 coliform bacteria per 100 milliliters.

[1] Oregon - Administrative "no discharge" rules for 8 high mountain lakes, but no comprehensive statewide law for MSDs.

[1] Pennsylvania - State laws are identical to Federal regulations requiring MSDs.

Rhode Island - No laws relating specifically to marine waste disposal.

South Carolina - No laws relating specifically to marine waste disposal.

[1] South Dakota - Vessels with kitchen or toilet facilities shall not discharge wastes into waters of the State.

Tennessee - Regulations require that treatment devices must be used in conjunction with marine toilets. Effluent must be free of unsightly floating solids and must have coliform count not to exceed 240 per 100 ml.

[1,2] Texas - No person may discharge sewage, treated or untreated, from a boat into the waters of the State. Holding tanks required, and may be discharged only to a certified pump-out facility. EPA approved "no discharge" areas for 24 freshwater lakes.

[1] Utah - Marine toilets must be equipped with facilities that will adequately treat, hold, incinerate or otherwise handle sewage in a manner that is capable of preventing water pollution.

[1,2] Vermont - No discharge of sewage is allowed. Holding tanks or portable toilets are required. EPA approved "no discharge" areas for the waters of the State, including those Vermont portions of Lakes Champlain and Memphremagog.

[1] Virginia - Boats with installed toilets and regularly moored, berthed, or docked within designated shellfish growing waters of the State shall be equipped with a sewage retention device. However, such boats equipped, on the date of adoption of this regulation, with a MSD which meets the requirements of the Clean Water Act (Sec. 312) may continue with that MSD so long as the device operates properly.

[1] Washington - No laws relating specifically to marine waste disposal.

West Virginia - Regulations require holding tanks only.

[1,2] Wisconsin - Boats equipped with toilets prohibited from discharging toilet wastes into waters of the State. Holding tank or incinerator required. EPA approved "no discharge" zone for all waters of the State, except for the Wisconsin waters of Lake Superior, the Mississippi River, and the St. Croix River to North Hudson.

Wyoming - No laws relating specifically to marine waste disposal.

1 - Copy of State law on file.

2 - States having EPA approved "no discharge" zones.

Part C: OVERVIEW OF MARINE SANITATION REGULATIONS
OF THE PROVINCE OF ONTARIO, CANADA

FACTS

Ontario Ministry of the Environment

Hon. Harry C. Parrott, D.D.S., Minister
Graham W. S. Scott, Q.C., Deputy Minister

Publication code: WFS2

ABOUT WATER

Revised
January 1980

ONTARIO CONTINUES BAN ON DIRECT DISCHARGE OF TREATED OR UNTREATED SEWAGE FROM PLEASURE BOATS

The Ontario Ministry of the Environment will continue to enforce its ban against the dumping of treated or untreated sewage from pleasure boats into provincial waters.

As of June 1, 1969, all toilet-equipped pleasure craft have had to also be equipped with holding tanks or incineration systems. The macerator/chlorinator has been banned from use by pleasure craft in Ontario waters since June 1, 1971.

The Ontario regulations prohibit the overboard discharge of treated or untreated sewage from pleasure boats and require adequate shore-based pump-out facilities. Violators of the pleasure craft regulation are subject to prosecution by means of a summary conviction ticket issued by the inspecting officer.

Portable toilets must be secured to the boat, and be adapted to a deck fitting for a shore-based pump-out.

All pleasure boats, including those which are foreign-owned but maintained in Ontario, must be equipped to comply in all respects with the Ontario regulations.

The province accepts adequate flow-through systems on large vessels as an immediate interim solution. However, Ontario has strongly urged the Federal government to activate as soon as possible a program of total containment for commercial vessels.

The province has expressed a willingness to cooperate in efforts to have installed shore reception facilities for waste from commercial vessels in the event that a no-discharge policy is adopted by the Federal government.

For additional information contact the local Ministry of the Environment office or write the Ontario Ministry of the Environment, 135 St. Clair Avenue, West, Toronto, Ontario, M4V 1P5.

BOATING AND MARINA REGULATIONS

INTRODUCTION

Ontario's Boating and Marina Regulations are designed to protect and preserve the waterways of Ontario for the use and pleasure of its citizens and visitors.

Pleasure boat and marina operators have a responsibility to meet the requirements which are intended to prevent the overboard discharge of sewage and garbage, and to provide for the proper disposal of these wastes by land-based facilities.

BOATING REGULATION SUMMARY

1. Sewage in all pleasure craft, including houseboats, must be retained in suitable equipment.
2. Equipment suitable for the purpose of the Regulation includes:
   (1) Retention devices with or without recirculation features which retain all the toilet waste for disposal ashore, and,
   (2) Incineration devices which reduce to ash all sewage and toilet wastes.
3. Suitable equipment shall be (1) non-portable, (2) be constructed of structurally sound material, (3) have adequate capacity for extended use, (4) be properly installed, and (5) in the case of storage devices be equipped with the necessary pipes and fittings conveniently located for pump-out by shore-based facilities. (Although not specified a pump-out deck fitting with 1½ inch diameter National Pipe Thread (NPT) is commonly used).

MARINA REGULATION SUMMARY

An Ontario Regulation requires that marinas and yacht clubs provide or arrange pump-out services for customers and members who have toilet equipped boats. In addition all marinas and yacht clubs must provide litter containers that can be conveniently used by occupants of pleasure boats.

Many of the operators of marinas and yacht clubs offering pump out services display an illustrated sign on or near their property. Note: Marina operators have reported obstruction problems when attempting to pump toilet wastes containing wet-strength paper.

VISITORS

Visiting pleasure boats are required to be in compliance with the Ontario Regulation in all respects, and at all times.

INSPECTION

Boats operating in Ontario waters are subject to routine inspection by Ministry Staff. Operators of boats in compliance will be offered a sticker to show that their boats have passed inspection.

Ontario Provincial Police and Royal Canadian Mounted Police have also been empowered to inspect craft on behalf of the Ministry. Violators may be fined up to $5,000.00 on a first offence and $10,000.00 thereafter.

REGULATION TEXT

The following is the full text of the Boating Regulation made under the Ontario Water Resources Act.

DISCHARGE OF SEWAGE FROM PLEASURE BOATS

1. In this Regulation,
   (b) "pleasure boat" means a boat used primarily for the carriage of person or persons for pleasure, whether on charter or not, and whether for compensation or not, and includes a boat used on water for living purposes;
   (c) "sewage" means organic and inorganic waste and includes, fuel, lubricants, litter, paper, plastics, glass, metal containers, bottles, crockery, rags, junk or similar refuse or garbage and human excrement but does not include,
      (i) liquid wastes, free of solids, from water used in a pleasure boat for household purposes, or
      (ii) exhaust wastes, cooling water and bilge water from a pleasure boat;
   (ca) "storage equipment" means equipment of a design and construction suitable for the storage or the incineration and storage of human excrement in a pleasure boat including such equipment that is an integral part of a toilet;
   (d) "toilet" in relation to a pleasure boat means equipment designed and used for defecation or urination by humans.
2. No person shall discharge or deposit, or cause or permit to be discharged or deposited into any water, sewage from a pleasure boat.
3. The owner and operator of every pleasure boat in which a toilet is installed shall ensure that, while the boat is on the water,
   (a) the boat is equipped with storage equipment, and
   (b) such toilet and storage equipment are installed so as to be non-portable.
5. The owner of a pleasure boat in which a toilet or toilets and storage equipment are installed shall ensure that each toilet and the storage equipment are installed so that,
   (a) the toilet and equipment are connected in such a manner that the equipment receives all toilet waste from the toilet;
   (b) equipment designed for the storage of human excrement is provided with a deck fitting

Part C (continued)

and such connecting piping as is necessary for the removal of toilet waste by shore-based pumping equipment;

(c) no means of removal of toilet waste is provided other than the means in clause (b);

(d) equipment designed for the incineration and storage of human excrement is supplied with such electrical current or other source of heat as is necessary to reduce to ash all excrement deposited therein, and

(e) all parts of the system for removal of toilet waste are congruent with one another and the boat.

HOW TO PREVENT AND REDUCE POLLUTION

- Outboard motors should be kept tuned to the manufacturer's specifications, and motors should not be left idling at dockside.
- Care should be taken when refuelling portable fuel tanks. They should be filled away from the water, if possible, and should not be overfilled.
- The gas-to-oil ratio should be kept at the manufacturer's recommended level. Excessive oil in the fuel generates contaminants.
- Don't throw empty cans, bottles etc. overboard. Keep garbage properly contained until you reach an onshore disposal site.
- Make sure that onboard sanitary facilities are in good operating condition.
- Marina operators should ensure that fuel storage tanks are not leaking and that caution is exercised in the filling of fuel tanks on pleasure boats.

TIPS FOR YOUR WATER SUPPLY

Although not covered by the Boating and Marina Regulations, the safety of your water supply should receive your careful consideration

If you have a fresh water tank aboard your boat, refill this tank only from an assured safe supply such as a municipal water system. If you are in any doubt as to the safety of the supply, you should boil or chlorinate the water before use. Furthermore, if you suspect the purity of the water in the fresh water tank, you should disinfect and flush the tank. To do so, following this simple procedure:

Fill the tank with water to which has been added one ounce of five percent sodium hypochlorite (household bleach) for each three gallons of water and leave it in the tank for at least twelve hours. Then drain the tank and flush it throughly with water from a supply known to be safe.

If you carry water in containers for domestic use, the first requirement is that the container be clean. If the sanitary condition of the cleaned container is in doubt, the procedure for disinfection outlined above may be followed.

The container itself should be distinctive in appearance and should be constructed of a non-corroding material, have a tight-fitting lid or cover, and should not be used for any purpose other than the storage of potable water. Clear labelling of the container may prevent confusion, particularly if you have guests aboard.

ADDITIONAL INFORMATION

If additional information is required contact the local Ministry of Environment office or:

Ontario Ministry of the Environment
135 St. Clair Avenue West
Toronto, Ontario
M4V 1P5

REGIONAL OFFICES

Ministry of the Environment
Northwestern Regional Office
435 James Street South
Thunder Bay P7E 6E3
Ontario
475-1205

Ministry of the Environment
Northeastern Regional Office
469 Bouchard Street
Sudbury P3E 2K8
Ontario
522-8282

Ministry of the Environment
Southwest Regional Office
985 Adelaide Street South
London N6E 1V3
Ontario
681-3600

Ministry of the Environment
West Central Regional Office
140 Centennial Parkway North
Stoney Creek L8E 3H2
Ontario
561-7410

Ministry of the Environment
Central Regional Office
150 Ferrand Drive
Don Mills M3C 3C3
Ontario
424-3000

Ministry of the Environment
Southeastern Regional Office
133 Dalton Street
Kingston K7L 4X6
Ontario
549-4000

W4

5M/1/78

BOATING AND MARINA REGULATIONS

A30

KC561

561

Part C
(continued)

Ministry of the Environment

Hon. George R. McCague
Minister

K. H. Sharpe
Deputy Minister

JRB Associates, Inc.

APPENDIX F

BIBLIOGRAPHY AND REFERENCES

A. SCIENTIFIC LITERATURE.....F- 1
B. ENGINEERING LITERATURE.....F- 4
C. POPULAR PRESS.....F- 6
D. STATE REGULATIONS LITERATURE.....F- 9
E. FEDERAL REGULATIONS LITERATURE.....F-10
F. MARKETING LITERATURE.....F-12
G. BOATING STATISTICS.....F-13

A. SCIENTIFIC LITERATURE

1. Arthur, J., et al., "Corporative Toxicology of Sewage Effluent Disinfection to Freshwater Aquatic Life," U.S. Environmental Protection Agency, Environmental Research Laboratory (EPA-600/3-75-013), November, 1975.

2. Barbaro, R.D., et al., "Bacteriological Water Quality of Several Recreational Areas in the Ross Barnett Reservoir," Journal of Water Pollution Control Federation, Vol. 41, 1969 (p. 1330).

3. Bertges, W.C., Recreational Vessel Waste Pollution, U.S. Coast Guard, NTIS #AD/A-000-453, June, 1974.

4. Brock, T.E., Biology of Microorganisms, 2nd Edition, Prentice Hall, Inc., Englewood Cliffs, NJ, 1974.

5. Brungs, W.A., "Effects of Residual Chlorine on Aquatic Life," Journal of Water Pollution Control Federation, Vol. 45, 1973 (p. 2180).

6. Chmura, G.L., and Ross, N.W., "The Environmental Impacts of Marinas and Their Boats," Marine Advisory Service, University of Rhode Island, Kingston, RI, 1978.

7. Collins, C., and Sedgwick, S., "Recreational Boating in Rhode Island's Coastal Waters: A Look Forward," Marine Technical Report 75, University of Rhode Island, Kingston, RI, October 1979.

8. Colwell, R.R., "Bacteria and Viruses - Indicators of Unnatural Environmental Changes Occurring in the Nation's Estuaries," Conference on Estuarine Pollution Control, 1977 (p. 508).

9. "Comparison of Total Coliform and Fecal Coliform Values in Shellfish Growing Area Waters and a Proposal for a Fecal Coliform Growing Area Standard," Proceedings of the 8th National Shellfish Sanitation Workshop, 1974.

10. Davis, W.P., et al., "Effects of Chlorinated Seawater on Decapod Crustaceans and Mulina Larvae," U.S. Environmental Protection Agency, EPA No. 600/3-79-031, March, 1979.

11. Davis, W.P., and Middaugh, D.P., "Impact of Chlorination Processes on Marine Ecosystems," Conference on Estuarine Pollution Control, 1977.

12. Davis, W.P., et al., "The Chemistry and Ecological Effects of Chlorination of Seawater: A Summary of EPA Research Projects," National Technical Information Service (NTIS), Springfield, VA.

13. Dawson, G.W., et al., Determination of Harmful Quantities and Rates of Penalty for Hazardous Substances, Volume II - Technical Documentation, U.S. Environmental Protection Agency, EPA-400/9-75-005-b, October, 1974.

14. Dondero, N.S., et al., "Salmonella in Surface Waters of Central New York State," Applied and Environmental Microbiology, Vol. 33, No. 4, April, 1977 (p. 791).

15. Faust, M.A., "Contribution of Pleasure Boats to Fecal Bacteria Concentrations in the Rhode River Estuary," Chesapeake Bay Center for Environmental Studies, Smithsonian Institution, Edgewater, MD, 1979.

16. Galstoff, P.S., "Reaction of Oysters to Chlorination," Research Report II, 1945.

17. Garreis, M.J., et al., "Marina Impact on Water Quality in Kent Island Narrows, Maryland," Environmental Health Administration, Maryland Department of Health and Mental Hygiene, 1979.

18. Hocutt, C.H., et al., Power Plants Effects on Fish and Shellfish Behavior, Academic Press, New York, NY, 1980.

19. Joklik, W.J., and Willett, H.P., Microbiology, 16th Edition, Appleton-Century-Crofts, New York, NY, 1976.

20. Kelch, W.J., et al., "Modeling Techniques for Estimating Fecal Coliforms in Estuaries," Journal of Water Pollution Control Federation, May, 1978 (p. 862).

21. Kidd, D.E., "Bacterial Contamination of Lake Powell Waters: An Assessment of the Problem," NTIS, PB 261-682, December, 1975.

22. Lardis, A., and Geyer, A., "Biodegradation of Shipboard Wastewater in Collection, Holding, and Transfer Tanks," David W. Taylor Naval Ship Research and Development Center, U.S. Department of the Navy, 78/041, January, 1978.

23. Mack, W.N., et al., "Pollution of a Marina Area by Watercraft Use and Indicated by Coliform and Chemical Concentrations," NTIS, PB 200-622, 1971.

24. Mattice, J.S., and Zittel, H.E., "Site Specific Evaluation of Power Plant Chlorination, Journal of Water Pollution Control Federation, Vol. 48, 1976 (p. 2284).

25. Mattice, J.S., et al., "Chemistry and Effects of Chlorine in Aquatic Systems: A Selected, Annotated Bibliography," Oak Ridge National Laboratory, Oak Ridge, TN, March 1976.

26. Missouri Basin Region Federal Water Pollution Control Administration, "Pollution of Navigable Waters by the Operation of Watercraft in the Missouri Basin," NTIS, PB 260-146, March, 1967.

27. Panel on Treatment and Disposal of Vessel Sanitary Wastes, "Treatment and Disposal of Vessel Sanitary Wastes," National Academy of Sciences, National Academy of Engineering, Maritime Information Committee, 1971.

28. Nixon, S.W., et al., "Ecology of Small Boat Marinas," Marine Technical Report Series No. 5, University of Rhode Island, Kingston, RI, 1973.

29. Pelczar and Reid, Microbiology, 3rd Edition, McGraw Hill Book Co., New York, NY, 1972.

30. Raytheon Company, "Rhode Island Areawide Water Quality Management Plan - Marinas Task," prepared for Rhode Island Statewide Planning Program, January, 1978.

31. Rheinheimer, G., Aquatic Microbiology, John Wiley & Sons, Ltd., London, 1974.

32. Seabloom, R.W., "Bacteriological Effect of Small Boat Wastes on Small Harbors," College of Engineering, University of Washington, Seattle, WA, July, 1969.

33. Smith, E.M., et al., "Role of Sediment in the Persistence on Enteroviruses in the Estuarine Environment," Applied and Environmental Microbiology, April, 1978 (p. 685).

34. Stewart, K.R., et al., "Drug-Resistance Transfer in Escherichia coli in New York Bight Sediment," Marine Pollution Bulletin, 1980.

35. Stone, R.W., et al., "Long-Term Effects of Toxicants and Biostimulants on the Water of Central San Francisco Bay," Sanitary Engineering Research Laboratory, University of California, Berkeley, CA, May, 1973.

36. Wetzel, R.G., Limnology, W.B. Saunders Company, Philadelphia, PA, 1975.

37. Zillich, J.A., "Toxicology of Combined Chlorine Residuals to Freshwater Fish," Journal of Water Pollution Control Federation, Vol. 44, February, 1972 (p. 212).

B. ENGINEERING LITERATURE

38. Ackinson, O.J., and Graves, R.E., "Study of a Marine Sanitation System Operating on Saline Water," National Maritime Research Center, Galveston, TX, May 1974.

39. Bartley, C.B., et al., "Disposal of Vessel Wastes: Shipboard and Shoreside Facilities, Phase One: Blackwater," Environmental Research Group, Inc., U.S. Department of Commerce, Maritime Administration, February 1979.

40. Bartley, C.B., and Titcomb, A.N., "Disposal of Vessel Wastes: Shipboard and Shoreside Facilities, Phase Two: Graywater," Environmental Research Group, Inc., U.S. Department of Commerce, Maritime Administration, July, 1979.

41. General Dynamics, Inc., "Storage of Wastes from Watercraft and Disposal at Shore Facilities," Environmental Protection Agency, Office of Water Quality, April, 1970.

42. Gluekert, A.J., and Saigh, P.A., "Onshore Treatment System for Sewage from Watercraft Retention Systems," National Environmental Research Center, U.S. Environmental Protection Agency, EPA-670/2-75-007, March, 1975.

43. Information Concepts, Inc., "A System for Estimating Recreational Boats and Their Sanitation Facilities in the United States," prepared for the Environmental Protection Agency, 1971.

44. Mackenthun, K.M., The Practice of Water Pollution Biology, U.S. Department of the Interior, 1969.

45. Metcalf & Eddy, Inc., Wastewater Engineering, 2nd Edition, McGraw-Hill, Inc., New York, NY, 1979.

46. Monogram Industries, Inc., "Progress Report: Solving the Problem of Pollution from Pleasurecraft Through the Retention of Wastes on Board for Disposal at Shoreside Pump Stations," Redondo Beach, CA.

47. Rimkus, R.R., et al., "MSD Systems for Solids Handling: Six Options," Water and Sewage Works, December, 1978 (p. 31).

48. Robins, J.H., and Green, A.C., "Development of On-Shore Treatment Systems for Sewage from Watercraft Waste Retention System," National Environmental Research Center, Office of Research and Development, U.S. Environmental Protection Agency, EPA-670/2-74-056, July, 1964.

49. Stinson, J.W. (Ed.), Proceedings of the Technology Transfer Seminar/Workshop in the Application of Pollution Abatement Technology to Local Governments, held at the U.S. Naval Academy, Annapolis, MD, October 16, 1974, sponsored by the David W. Taylor Naval Ship Research and Development Center.

50. Turney, W.G., "Control of Pollution from Pleasure Boats," Journal of Water Pollution Control Federation. (Undated reprint used.)

51. U.S. Department of Commerce, "Shipbuilding and Repair," U.S. Industrial Outlook, 1976.

52. U.S. Environmental Protection Agency, Office of Solid Waste, "Fate and Transport of Hazardous Constituents," Background Document, Resource Conservation and Recovery Act, Appendix B, 1980.

C. POPULAR PRESS

53. Alig, G.C., "Marine Sanitation Devices," Yachting, April, 1978 (p. 96).

54. Bottomley, T., "Head Law Primer," Motor Boating and Sailing, February, 1978.

56. Bruce, Grady, "Recreational Boating: Problems and Prospects," presented at 2nd Annual National Conference, National Marine Manufacturers Association, Scottsdale, Arizona, October 26-29, 1980, in brochure New Horizons.

57. Burdick, W., "Unnecessary, No Benefits, Senate Told," MRAA Newsletter, June, 1980.

58. Clark, T., "Additions to MSD Fact Base," Cruising World, November, 1980.

59. Crawford, J., "The Toilet Fiasco," Sail, October, 1979.

60. Crickmer, B., "Regulation" How Much is Enough?", Nation's Business, March, 1980.

61. Day, G., and Brennan, B., "Readers Speak Out on MSDs," Cruising World, October, 1980.

62. Emanuel, K., "MSDs: Protection from Ourselves," Sail, July, 1978.

63. German, M., "Sea Grant '80, A Project Outlook," Marine Resource Bulletin, Vol. XIII, No. 1, Spring, 1980.

64. Hart, D., "Flushing Out the Facts," Motor Boating and Sailing, December, 1979.

65. Hummel, S.D., "High Pollutin'," Soundings, February, 1981.

66. Johnson, K., "Maryland Clamping Down on Pump-Out Issue," Soundings, January, 1979.

67. Johnson, K., "MSDs: No Miracle at Marathon," Boating, June, 1970.

68. Krause, K., "Getting A-Head," Motorboat, July, 1979.

69. Malone, J., "Boating's New Laws," Miami Herald, February 24, 1980.

70. Matheson, G., "From W.C. to Shining Sea," Pacific Yachting, June, 1980.

71. McKernan, W.J., "Poo Poo Boo Boo," Motor Boating and Sailing, May, 1980.

72. Mueller, P., "On Patrol with the Coast Guard Auxiliary," Lakeland Boating, January, 1981.

73. Phillips, N., "Gov't in the Head," W.O. News, December 12, 1980.

74. Pittman, F., "MSD's - The Problem Is Under Our Noses," Lakeland Boating, January, 1981.

75. Ragland, S., Jr., "Additions to MSD Fact Base," Cruising World, 1980.

76. Rath, D., "Parting the MSD Waters a Little," Boating, June, 1978.

77. Schwartz, R., "Is the MSD Waiver Forever?," Boating, November, 1978.

78. Sharp, D., "A Head by Any Name," Motorboat, March, 1978.

79. Sieck, M., "Boating Guide to Marine Sanitation Devices," Boating, October, 1979.

80. Snellings, B., "New Marine Sanitation Rules Due," New Orleans Picayune, December 26, 1979.

81. Spurr, D., "The Shellfish Gambit," Cruising World, August, 1980.

82. Sullivan, D., "Marine Sanitation: How to Comply," The Work Boat, February, 1978.

83. Tuttle, B., "MSD Critics Head for Congress," Soundings, December, 1980.

Author Unidentified

84. "Alternatives Suggested for Boats Lacking Space for MSDs," Boating Industry, November, 1979, The Boating Industry, Inc., New York, NY.

85. "A.W.O. Progress Report," The Work Boat, June, 1976, H.L. Peace Publications.

86. "Boat Owners Decision Due on Anti-MSD Suit," Soundings, August, 1980.

87. "Boat Owners Left to Hold Their Own," Soundings, September, 1980.

88. "CG Plant Inspection of Marine Heads," Marine and Recreational News, May 16, 1980.

89. "Clean Waters - A Common Sense Approach to Marine Sanitation," The Boating Industry, Vol. II, December, 1975.

90. "Coast Guard Officers Report Plans for MSD Enforcement," The Boating Industry, November, 1979, The Boating Industry, Inc., New York, NY.

91. "Hard Times Come to Environmentalists," U.S. News & World Report, March 10, 1980.

92. "MSD Foes Dealt Setback," Soundings, September, 1980.

93. "NFB Meets in Ohio," Inter/Port, Marex, National Marine Manufacturers Association, October 20, 1980.

94. "New Regulations Tighten U.S. Grip on Vessel Sewage Discharges," Marine Engineering Log, June, 1978.

95. "Recreational Boating Costs Plenty Study Shows," The Work Boat, December, 1980.

96. "Rum Bay Shares Sanitation Dilemma," Go Boating, March, 1977.

97. "Sea Guide: The HEAD-Ache for Midwestern Boatmen," Sea, Inland Edition, February, 1979.

98. "Some MSD Waivers May Be Granted," The Boating Industry, November, 1979.

99. "Strong Gains for 1976," The Boating Industry, January, 1976.

100. "The Boating Business - 1975," The Boating Industry, January, 1976.

101. "The MSD Problem is Coming to a Head," Connecticut Maritime Trades Association, Inc., October, 1980.

102. "USCG Steps Up MSD Boat Checks," The Boating Industry, November, 1980.

103. "What's A 'Head' in '80," Pleasure Boating, March, 1980.

104. "Virginia Head Regs," Marine Resource Bulletin, Virginia Institute of Marine Sciences, Spring, 1980.

105. "Virginia State Supreme Court Refuses to Hear Pump-Out Facility Case," Intercom, National Association of Engine and Boat Manufacturers, New York, NY, July 5, 1979.

106. "Waiver Set on Type II MSD's for Pleasure Boats," Intercom, April 6, 1978.

D. STATE REGULATIONS LITERATURE

107. Letters from States to Reginald Dean, Executive Director, National Marina Association, in reply to request for information on States' handling of pumpout requirements for new marinas.

108. "State Boat Registrations, 1968-1978," Marex Marketing Committee, International Marine Expositions, Inc., 1979.

109. "Summary of State Laws Governing Watercraft Waste Disposal," Boating Industries Association.

E. FEDERAL REGULATIONS LITERATURE

110. U.S. Department of the Interior, Federal Water Pollution Control Administration, "Wastes from Watercraft - Report to the Congress of the United States," Senate Document 90-48, August 7, 1967.

111. Zener, B.S., "The Federal Law of Water Pollution Control," in Federal Environmental Law, edited by Dolgin and Guilbert, West Publishing Co., St. Paul, MN, 1974.

U.S. Coast Guard Documents

112. "Boating Safety, Circular 19," U.S. Department of Transportation, U.S. Coast Guard, February, 1975.

113. "Federal Marine Saniation Device Regulations," U.S. Department of Transportation, U.S. Coast Guard, CG 485 also CG 485 (Rev. 6-78).

114. "Federal Requirements for Recreational Boats," U.S. Department of Transportation, U.S. Coast Guard, CG 290, July, 1976.

115. "Marine Engineering Regulations, Subchapter F," U.S. Department of Transportation, U.S. Coast Guard, June 1, 1973.

116. "MSDs, A Comprehensive Guide to the New Marine Sanitation Device Regulations," U.S. Department of Transportation, U.S. Coast Guard, Boating Safety Detachment, 03-3.

Federal Register Notices

117. January 30, 1975, 40:4622, "Marine Sanitation Devices: Certification Procedures and Design and Construction Requirements," U.S. Department of Transportation, U.S. Coast Guard.

118. October 10, 1975, 40:47972, "Notice of Proposed Rule-Making: Proposed Amendment of 40 CFR 140," U.S. Environmental Protection Agency.

119. December 15, 1975, 40:58214, "Marine Sanitation Devices: Certifications Granted," U.S. Department of Transportation, U.S. Coast Guard.

120. January 26, 1976, 41:4452, "Marine Sanitation Devices: Standards of Performance," U.S. Environmental Protection Agency.

121. April 12, 1976, 41:15324, "Amendments of 33 CFR 159," U.S. Department of Transportation, U.S. Coast Guard.

122. January 3, 1977, 42:11, "Amendments to Holding Tank Certification," U.S. Department of Transportation, U.S. Coast Guard.

123. February 3, 1977, 42:6730, "Marine Sanitation Devices: Certifications Granted," U.S. Department of Transportation, U.S. Coast Guard.

124. November 28, 1977, 42:60619, "Marine Sanitation Devices: Waiver of the Type I MSD Installation Date," U.S. Department of Transportation, U.S. Coast Guard.

125. July 10, 1978,, 43:29637, "Marine Sanitation Devices: Waiver of Certain Requirements for Vessels of 65 Feet in Length or Less," U.S. Department of Transportation, U.S. Coast Guard.

126. February 4, 1981, 46:10723, "Removal of Bis-(Chloromethyl) Ether (BCME) from the Toxic Pollutant List Under Section 307(a)(1) of the Clean Water Act," U.S. Environmental Protection Agency.

F. MARKETING LITERATURE

127. "Annual Distribution Merchandising Survey - 1975," Boat and Motor Dealer, 1975-1976, Dietmeier-Van Zeven Publications, Inc.

128. "Boating's Outlook to Get Detailed Review at Conference," Inter/Port, Marex, National Marine Manufacturers Association, September 15, 1980.

129. "Dealers Guide to Marine Sanitation," Boating Industry, August, 1979.

130. Marketing Report, February, July, and October, 1980, Recreational Vehicle Industry Association.

131. "Pleasure Boating," Marine Buyer's Guide, 1975-1976, The Boating Industry, Inc.

132. "Recreational Boats and Boating Products Market (U.S.), Report #A678, Fall, 1979, Frost & Sullivan, Inc., New York, NY.

133. "The Buying Boatman," Boating, Publication of a Survey of Purchasing Activity Among Reader Service Inquirers, February, 1978.

134. "The Marine Market," Marex Marketing Committee, International Marine Expositions, Inc., April, 1978.

135. "U.S. Shipbuilding Outlook," Marine Engineering Log, Simmon-Boardman Publications, June 15, 1975.

G. BOATING STATISTICS

136. "Boating: A Statistical Report on America's Top Family Sport, 1980," Marketing Services Department, Marex, Chicago, IL, and New York, NY.

137. "Boating Registration Statistics, 1978," National Marine Manufacturers Association, (Marex), Chicago, IL.

138. "Boating Registration Statistics, 1979," National Marine Manufacturers Association, (Marex), Chicago, IL.

139. "Boating Statistics, 1979," U.S. Department of Transportation, U.S. Coast Guard (Comdtinst M 16754.1), May 1, 1980.

140. "Recreational Boating in the Continental United States in 1973 and 1976," U.S. Department of Transportation, U.S. Coast Guard, Report No. CG-B-003-78, March 1978.

141. Statistical Abstract of the United States: 1980, 101st Edition, U.S. Bureau of the Census, Washington, DC, 1980.

142. "The Growth of Selected Leisure Industries," Department of Commerce, Industry and Trade Administration, May, 1979.

143. Transportation Energy Conservation Data Book, Edition 3, Oak Ridge National Laboratory, ORNL-5493.

144. Waterway Guide 1980, Waterway Guide, Inc., Annapolis, MD, 1980.

145. 1977-1979 Boat Sales Data from Boat and Motor Dealer, Statistics and Research Department, Dietmeier-Van Zeven Publications, Inc., December, 1979.