DEVELOPMENT DOCUMENT

for

PROPOSED EFFLUENT LIMITATIONS GUIDELINES, NEW SOURCE PERFORMANCE STANDARDS,

and

PRETREATMENT STANDARDS

for the

INORGANIC CHEMICALS MANUFACTURING POINT SOURCE CATEGORY

Douglas M. Costle
Administrator

Robert B. Schaffer, Director
Effluent Guidelines Division

G. Edward Stigall, Chief
Inorganic Chemicals and Service Industries Branch

Elwood E. Martin
Dwight Hlustick
Project Officers

June 1980

Effluent Guidelines Division
Office of Water and Waste Management
U.S. Environmental Protection Agency
Washington, D.C. 20460

TECHNICAL REPORT DATA

(Please read Instructions on the reverse before completing)

1 REPORT NO EPA-440/1-80/007b	2	3 RECIPIENT'S ACCESSION NO
4 TITLE AND SUBTITLE Development Document for Effluent Limitations Guidelines and Standards for the Inorganic Chemicals Manufacturing Point Source Category.		5 REPORT DATE June 1980 6 PERFORMING ORGANIZATION CODE
7 AUTHOR(S) G. Edward Stigall Elwood E. Martin Dwight Blustick		8 PERFORMING ORGANIZATION REPORT NO
9 PERFORMING ORGANIZATION NAME AND ADDRESS Effluent Guidelines Division (WH-552) 401 M Street, S. W. Washington, D. C. 20460		10 PROGRAM ELEMENT NO 11 CONTRACT/GRANT NO 68-01-5767
12 SPONSORING AGENCY NAME AND ADDRESS Environmental Protection Agency 401 M Street, S. W. Washington, D. C. 20460		13 TYPE OF REPORT AND PERIOD COVERED Proposed 14 SPONSORING AGENCY CODE

15 SUPPLEMENTARY NOTES

16 ABSTRACT

This document presents the findings of a study of the Inorganic Chemicals Manufacturing Point Source Category for the purpose of developing effluent limitations and guidelines for existing point sources and standards of performance and pretreatment standards for new and existing point sources to implement Sections 301, 304, 306, 307, 308, and 501 of the Clean Water Act (the Federal Water Pollution Control Act Amendments of 1972, 33 USC 1251 et. seq., as amended by the Clean Water Act of 1977, P.L. 95-217) (the "Act"). This document was also prepared in response to the Settlement Agreement in in Natural Resources Defense Council, Inc. v. Train, 8 ERC 2120 (D.D.C. 1976), modified March 9, 1979.

The information presented in this document provides technical support for regulations proposed in July 1980 for 11 subcategories of the Inorganic Chemicals Manufacturing Point Source Category. Descriptions of the treatment technologies appropriate for achieving the limitations as well as supporting data, cost estimates, and rationale for the development of the proposed effluent limitations, guidelines, and standards of performance are contained in this report.

17 KEY WORDS AND DOCUMENT ANALYSIS

a DESCRIPTORS	b IDENTIFIERS/OPEN ENDED TERMS	c COSATI Field/Group
Water Pollution Control Effluent Limitations Guidelines Standards of Performance Treatment Technology Treatment Costs Inorganic Chemicals Manufacturing		

18 DISTRIBUTION STATEMENT Release Unlimited	19 SECURITY CLASS *(This Report)*	21 NO OF PAGES
	20 SECURITY CLASS *(This page)*	22 PRICE

4 Form 2220-1 (9-73)

TABLE OF CONTENTS

		Page
	LIST OF FIGURES	xxiii
	LIST OF TABLES	xxxiii
	ACKNOWLEDGEMENTS	li
1.0	CONCLUSIONS AND SUMMARY	1
	1.1 TOXIC POLLUTANTS	1
	1.2 CONTROL AND TREATMENT TECHNOLOGY	2
	1.3 COSTS OF ADDITIONAL IN-PLANT TREATMENT	2
	1.4 SUBCATEGORIZATION	2
	1.5 RESTUDY OF REMANDED REGULATIONS	3
2.0	RECOMMENDATIONS	5
3.0	INTRODUCTION	23
	3.1 AUTHORITY	23
	3.1.1 The Federal Water Pollution Control Act Amendments	23
	3.1.2 Court Remand Regulations	26
	3.1.3 The Settlement Agreement	28
	3.2 GENERAL APPROACH AND METHODOLOGY	36
	3.2.1 Industry Data Based Development and Subcategorization Review	37
	3.2.2 The Screening and Verification Sampling Programs	37
	3.2.3 Engineering Evaluations	37
	3.2.4 Treatment System Cost Estimates	38
	3.3 GENERAL CRITERIA FOR EFFLUENT LIMITATIONS	38
	3.3.1 BPT Effluent Limitations	38
	3.3.2 BAT Effluent Limitations	39
	3.3.3 BCT Effluent Limitations	39
	3.3.4 New Source Performance Standards	42
	3.3.5 Pretreatment Standards for Existing Sources	42
	3.3.6 Pretreatment Standards for New Sources	42

TABLE OF CONTENTS - Continued

			Page
4.0	SUBCATEGORIZATION REVIEW		45
	4.1	BASIS FOR SUBCATEGORIZATION	45
		4.1.1 Factors Considered	45
		4.1.2 General Conclusions	49
	4.2	SECONDARY SUBCATEGORIZATION	49
		4.2.1 Chlor-Alkali	49
		4.2.2 Titanium Dioxide	49
		4.2.3 Hydrogen Cyanide	51
	4.3	REVIEW OF POSSIBLE INTEGRATION OF SUBCATEGORIES	51
		4.3.1 Hydrofluoric Acid and Aluminum Fluoride	51
	4.4	SUMMARY	52
5.0	SCREENING AND VERIFICATION SAMPLING PROGRAMS		53
	5.1	SCOPE AND METHODOLOGY	53
		5.1.1 Selecting Plants and Making Preliminary Contacts	54
		5.1.2 Screening and Verification Sampling	55
		5.1.3 Analytical Methodology for Toxic Pollutants	57
		5.1.4 Quality Assurance Provisions	64
	5.2	SUMMARY OF ANALYTICAL RESULTS	65
6.0	PROCESS AND WASTE TREATMMENT INFORMATION DEVELOPMENT AND EVALUATION		71
	6.1	INDUSTRY DATA BASE DESCRIPTION	71
		6.1.1 Literature Review	71
		6.1.2 Plant Visits	71
		6.1.3 Telephone and Direct Contact	72
		6.1.4 308 Questionnaire Responses	72
	6.2	PROCESS WASTE SOURCES AND CURRENT TREATMENT PRACTICES	74
		6.2.1 Data Acquisition	74
		6.2.2 Evaluation of Data	74
		6.2.3 Model Plant and BPT Treatment System Specification	75
		6.2.4 Dissolved Solids in Waste Water Effluents	76

TABLE OF CONTENTS - Continued

			Page
7.0	ASSESSMENT OF TECHNOLOGY FOR ADVANCED TREATMENT AND CONTROL		79
	7.1	INTRODUCTION	79
	7.2	HYDROXIDE PRECIPITATION	80
	7.3	FERRITE COPRECIPITATION	85
	7.4	SULFIDE PRECIPITATION	85
	7.5	THE XANTHATE PROCESS	87
	7.6	ION EXCHANGE	89
	7.7	REDUCTION PROCESSES	91
	7.8	OXIDATION PROCESSES	93
	7.9	MEMBRANE PROCESSES	96
	7.10	ADSORPTION	98
	7.11	FLUORIDE REMOVAL	101
	7.12	CHLORINE REMOVAL	102
8.0	TREATABILITY ESTIMATES AND LONG-TERM DATA ANALYSIS		103
	8.1	THE DEVELOPMENT OF TREATABILITY ESTIMATES	103
	8.2	THE USE OF HISTORICAL POLLUTANT DATA	117
		8.2.1 Determination of Limitation Guidelines Based Upon Historical Performance	117
		8.2.2 Assumptions Concerning Daily Pollutant Level Measurements	118
		8.2.3 Assumptions Concerning 30-Day Average Pollutant Level Observation	123
9.0	TREATMENT TECHNOLOGY APPLICATIONS FOR TOXIC POLLUTANT REMOVAL		131
	9.1	SELECTION OF POLLUTANTS TO BE CONTROLLED	131
	9.2	APPLICATION OF ADVANCE LEVEL TREATMENT AND CONTROL ALTERNATIVES	131
		9.2.1 General Design Objectives	131
		9.2.2 Pretreatment Technology	134
		9.2.3 New Source Performance Standards	134
	9.3	ESTIMATED ACHIEVABLE PERFORMANCE CHARACTERISTICS FOR ADVANCED LEVEL APPLICATIONS	134
		9.3.1 Advanced Level Removal of BPT Pollutants	135
		9.3.2 Advanced Level Removal of Toxic Pollutants	135

TABLE OF CONTENTS - Continued

			Page
	9.4	POLLUTION CONTROL PARAMETERS TO BE REGULATED	136
		9.4.1 Conventional Pollutants	136
		9.4.2 Nonconventional Pollutants	136
		9.4.3 Toxic Pollutants	137
10.0	COST OF TREATMENT AND CONTROL SYSTEMS		139
	10.1	INTRODUCTION	139
		10.1.1 Purpose of Cost Data	139
		10.1.2 General Approach	140
		10.1.3 Cost References and Rationale	140
		10.1.4 Definition of Levels of Treatment and Control Cost Development	141
		10.1.5 Treatment and Disposal Rationale Applied to Cost Development	141
		10.1.6 Expression of Costs	142
	10.2	COST ESTIMATES FOR EACH SUBCATEGORY	149
11.0	CHLOR-ALKALI INDUSTRY		151
	11.1	MERCURY CELL PROCESS INDUSTRY PROFILE	151
		11.1.1 General Description	151
		11.1.2 General Process Description and Raw Materials	151
	11.2	WATER USE AND WASTE WATER SOURCE CHARACTERISTICS	155
		11.2.1 Water Use	155
		11.2.2 Waste Sources	155
	11.3	DESCRIPTION OF SPECIFIC PLANTS	158
		11.3.1 Screening Program	158
		11.3.2 Verification	160
		11.3.3 Descriptions of Plants Not Sampled	166
		11.3.4 Summary of the Toxic Pollutant Data	169
	11.4	POLLUTION ABATEMENT OPTIONS	174
		11.4.1 Toxic Pollutants of Concern	174
		11.4.2 Prevailing Control and Treatment Practices	174
		11.4.3 Process Modifications and Technology Transfer Options	174
		11.4.4 Best Management Practices	176
		11.4.5 Advanced Treatment Technologies	176

TABLE OF CONTENTS - Continued

			Page
11.5	SELECTION OF APPROPRIATE TECHNOLOGY AND EQUIPMENT		177
	11.5.1	Technologies for Different Treatment Levels	177
	11.5.2	Equipment for Different Treatment Levels	177
11.6	TREATMENT COST ESTIMATES		180
	11.6.1	General Discussion	180
	11.6.2	Chlorine Bearing Wastes	181
	11.6.3	Model Plant Treatment Costs	181
11.7	BASIS FOR REGULATIONS		182
	11.7.1	Basis for BPT Limitations	182
	11.7.2	Basis for Proposed BAT Effluent Limitations	194
	11.7.3	Basis for Proposed BCT Effluent Limitations	205
	11.7.4	Basis for New Source Performance Standards	205
	11.7.5	Basis for Proposed Pretreatment Standards	205
11.8	DIAPHRAGM CELL PROCESS INDUSTRY PROFILE		206
	11.8.1	General Description	206
	11.8.2	General Process Description	206
11.9	WATER USE AND WASTE WATER SOURCES		209
	11.9.1	Water Use	209
	11.9.2	Waste Sources	211
11.10	DESCRIPTIONS OF SPECIFIC PLANTS		214
	11.10.1	Screening	214
	11.10.2	Verification	214
	11.10.3	Descriptions of Plants Not Sampled	221
	11.10.4	Toxic Pollutant Concentrations	224
11.11	POLLUTION ABATEMENT OPTIONS		231
	11.11.1	Toxic Pollutants of Concern	231
	11.11.2	Prevailing Control and Treatment Practices	236
	11.11.3	Process Modifications and Technology Transfer Options	237
	11.11.4	Best Management Practices	238
	11.11.5	Advanced Treatment Technologies	239
11.12	SELECTION OF APPROPRIATE TECHNOLOGY AND EQUIPMENT		239
	11.12.1	Technologies for Different Treatment Levels	239
	11.12.2	Equipment for Different Treatment Levels	244

TABLE OF CONTENTS - Continued

			Page
11.13	TREATMENT COST ESTIMATES		244
	11.13.1	General Discussion	244
	11.13.2	Model Plant Treatment Costs	247
11.14	BASIS FOR REGULATIONS		248
	11.14.1	Basis for BPT Limitations	248
	11.14.2	Basis for BAT Effluent Limitations	263
	11.14.3	Basis for BCT Limitations	268
	11.14.4	Basis for New Source Performance Standards	270
	11.14.5	Basis for Pretreatment Standards	273
12.0	HYDROFLUORIC ACID INDUSTRY		275
12.1	INDUSTRY PROFILE		275
	12.1.1	General Description	275
	12.1.2	General Process Description and Raw Materials	275
12.2	WATER USE AND WASTE SOURCE CHARACTERISTICS		279
	12.2.1	Water Use	279
	12.2.2	Waste Sources	279
12.3	DESCRIPTION OF PLANTS VISITED AND SAMPLED		285
	12.3.1	Screening	285
	12.3.2	Verification	291
	12.3.3	Summary of the Toxic Pollutant Data	291
12.4	POLLUTION ABATEMENT OPTIONS		295
	12.4.1	Toxic Pollutants of Concern	295
	12.4.2	Process Modifications and Technology Transfer Options	298
	12.4.3	Best Management Practices	299
	12.4.4	Prevailing Control and Treatment Practices	299
	12.4.5	Advanced Treatment Technologies	300
12.5	SELECTION OF APPROPRIATE TECHNOLOGY AND EQUIPMENT		301
	12.5.1	Technologies for Different Treatment Levels	301
	12.5.2	Equipment for Different Treatment Levels	306
12.6	TREATMENT COST ESTIMATES		308
	12.6.1	General Discussion	308
	12.6.2	Model Plant Control Costs for Existing Sources	313

TABLE OF CONTENTS - Continued

			Page
	12.6.3	Model Plant Control Costs for New Sources	317
12.7	BASIS FOR REGULATIONS		324
	12.7.1	Evaluation of BPT Treatment Practices	324
	12.7.2	Basis for Proposed BPT Effluent Limitations	329
	12.7.3	Basis for Proposed BCT Effluent Limitations	340
	12.7.4	Basis for Proposed BAT Effluent Limitations	341
	12.7.5	Basis for Proposed New Source Performance Standards	349
	12.7.6	Basis for Proposed Pretreatment Standards	354
13.0	HYDROGEN PEROXIDE INDUSTRY		357
13.1	SUMMARY OF DETERMINATIONS		357
13.2	ASSESSMENT OF THE WATER POLLUTATION POTENTIAL		357
	13.2.1	Production Processes and Effluents	357
	13.2.2	Plants	358
	13.2.3	Toxic Pollutants	358
13.3	STATUS OF REGULATIONS		358
14.0	TITANIUM DIOXIDE INDUSTRY (RUTILE/UPGRADED ILMENITE--CHLORIDE PROCESS)		361
14.1	INDUSTRY PROFILE		361
	14.1.1	General Description	361
	14.1.2	General Process Description and Raw Materials	361
14.2	WATER USE AND WASTE SOURCE CHARACTERISTICS		365
	14.2.1	Water Use	365
	14.2.2	Waste Sources	365
14.3	DESCRIPTION OF PLANTS VISITED AND SAMPLED		368
	14.3.1	Screening	368
	14.3.2	Verification	371
	14.3.3	Toxic Pollutant Concentrations	371
14.4	POLLUTION ABATEMENT OPTIONS		375
	14.4.1	Toxic Pollutants of Concern	375
	14.4.2	Process Modification and Technology Transfer Options	377

TABLE OF CONTENTS - Continued

			Page
	14.4.3	Best Management Practices	377
	14.4.4	Prevailing Control and Treatment Practices	377
	14.4.5	Advanced Treatment Technologies	378
14.5	SELECTION OF APPROPRIATE TECHNOLOGY AND EQUIPMENT		379
	14.5.1	Technologies for Different Treatment Levels	379
	14.5.2	Equipment for Different Treatment Levels	379
14.6	TREATMENT COST ESTIMATES		383
	14.6.1	General Discussion	383
14.7	BASIS FOR REGULATIONS		385
	14.7.1	Evaluation of BPT Treatment Practices	385
	14.7.2	Basis for Proposed BPT Effluent Limitations	392
	14.7.3	Basis for Proposed BCT Effluent Limitations	400
	14.7.4	Basis for Proposed BAT Effluent Limitations	400
	14.7.5	Basis for Proposed New Source Performance Standards	403
	14.7.6	Basis for Pretreatment Standards	406
14.8	TITANIUM DIOXIDE - SULFATE PROCESS INDUSTRY PROFILE		408
	14.8.1	General Description	408
	14.8.2	General Process Description and Raw Materials	408
14.9	WATER USE AND WASTE SOURCE CHARACTERISTICS		411
	14.9.1	Water Use	411
	14.9.2	Waste Sources	411
14.10	DESCRIPTION OF PLANTS		415
	14.10.1	Screening	415
	14.10.2	Verification	415
	14.10.3	Other Plant Descriptions	417
	14.10.4	Toxic Pollutant Concentrations	420
14.11	POLLUTION ABATEMENT OPTIONS		425
	14.11.1	Toxic Pollutants of Concern	425
	14.11.2	Process Modifications and Technology Transfer Options	426
	14.11.3	Best Management Practices	426
	14.11.4	Prevailing Control and Treatment Practices	426

TABLE OF CONTENTS - Continued

		Page
	14.11.5 Advanced Treatment Technologies	426
14.12	SELECTION OF APPROPRIATE TECHNOLOGY AND EQUIPMENT	427
	14.12.1 Technologies for Different Treatment Levels	427
	14.12.2 Equipment for Different Treatment Levels	430
14.13	TREATMENT COST ESTIMATES	431
	14.13.1 General Discussion	431
	14.13.2 Model Plant Control and Treatment Costs	432
14.14	BASIS FOR REGULATIONS	433
	14.14.1 Evaluation of BPT Practices	433
	14.14.2 Basis for Proposed BPT Effluent Limitations Technology Basis	444
	14.14.3 Basis for Proposed BCT Effluent Limitations	452
	14.14.4 Basis for Proposed BAT Effluent Limitations	452
	14.14.5 Basis for Proposed New Source Performance Standards	452
	14.14.6 Basis for Proposed Pretreatment Standards	452
14.15	TITANIUM DIOXIDE - CHLORIDE ILMENITE PROCESS INDUSTRY PROFILE	455
	14.15.1 General Description	455
	14.15.2 General Process Description and Raw Materials	455
14.16	WATER USE AND WASTE SOURCE CHARACTERISTICS	458
	14.16.1 Water Use	458
	14.16.2 Waste Sources	458
14.17	DESCRIPTION OF PLANTS VISTED AND SAMPLED	461
	14.17.1 Screening	461
	14.17.2 Verification Program	462
	14.17.3 Toxic Pollutant Concentration	462
14.18	POLLUTION ABATEMENT OPTIONS	466
	14.18.1 Toxic Pollutants of Concern	466
	14.18.2 Process Modifications and Technology Transfer Options	466
	14.18.3 Best Management Practices	466
	14.18.4 Prevailing Control and Treatment Practices	467
	14.18.5 Advanced Treatment Technology	467
14.19	SELECTION OF APPROPRIATE TECHNOLOGY AND EQUIPMENT	468

TABLE OF CONTENTS - Continued

			Page
	14.19.1	Technologies for Different Treatment Levels	468
	14.19.2	Equipment for Different Treatment Levels	471
14.20	TREATMENT COST ESTIMATES		472
	14.20.1	General Discussion	472
	14.20.2	Model Plant Control and Treatment Costs	473
14.21	BASIS FOR REGULATIONS		479
	14.21.1	Evaluation of BPT Treatment Practices	479
	14.21.2	Basis for Proposed BPT Effluent Limitation	479
	14.21.3	Basis for Proposed BCT Effluent Limitations	485
	14.21.4	Basis for Proposed BAT Effluent Limitations	485
	14.21.5	Basis for the Proposed New Source Performance Standards	485
	14.21.6	Basis for Proposed Pretreatment Standards	492
15.0	ALUMINUM FLUORIDE INDUSTRY		493
15.1	INDUSTRY PROFILE		493
	15.1.1	General Description	493
	15.1.2	General Process Description and Raw Materials	493
15.2	WATER USE AND WASTE SOURCE CHARACTERISTICS		493
	15.2.1	Water Use	493
	15.2.2	Waste Sources	497
15.3	DESCRIPTION OF PLANTS VISITED AND SAMPLED		500
	15.3.1	Screening	500
	15.3.2	Verification	500
	15.3.3	Summary of the Toxic Pollutant Data	500
15.4	POLLUTION ABATEMENT OPTIONS		510
	15.4.1	Toxic Pollutants of Concern	510
	15.4.2	Process Modifications and Technology Transfer Options	510
	15.4.3	Best Management Practices	510
	15.4.4	Prevailing Control and Treatment Practices	511
	15.4.5	Advanced Treatment Technologies	511

TABLE OF CONTENTS - Continued

			Page
15.5	SELECTION OF APPROPRIATE TECHNOLOGY AND EQUIPMENT		512
	15.5.1	Technologies for Different Treatment Levels	512
	15.5.2	Equipment for Different Treatment Levels	512
15.6	TREATMENT COST ESTIMATES		518
	15.6.1	General Discussion	518
15.7	BASIS FOR REGULATIONS		536
	15.7.1	Evaluation of BPT Treatment Practices	536
	15.7.2	BPT Effluent Limitations	536
	15.7.3	Basis for Proposed BCT Effluent Limitations	542
	15.7.4	Basis for Proposed BAT Effluent Limitations	542
	15.7.5	Basis for Proposed New Source Performance Standards	548
	15.7.6	Basis for Proposed Pretreatment Standards	549
16.0	CHROME PIGMENTS INDUSTRY		551
16.1	INDUSTRY PROFILE		551
	16.1.1	General Description	551
	16.1.2	General Process Description and Raw Materials	551
16.2	WATER USE AND WASTE SOURCE CHARACTERISTICS		560
	16.2.1	Water Use	560
	16.2.2	Waste Sources	560
16.3	DESCRIPTION OF PLANTS		564
	16.3.1	Screening	564
	16.3.2	Verification	567
	16.3.3	Toxic Pollutant Concentrations	570
16.4	POLLUTION ABATEMENT OPTIONS		577
	16.4.1	Toxic Pollutants of Concern	577
	16.4.2	Process Modifications and Technology Transfer Options	578
	16.4.3	Best Management Practices	579
	16.4.4	Prevailing Control and Treatment Practices	579
	16.4.5	Advanced Treatment Technologies	580
16.5	SELECTION OF APPROPRIATE TECHNOLOGY AND EQUIPMENT		581

TABLE OF CONTENTS - Continued

			Page
	16.5.1	Technologies for Different Treatment Levels	581
	16.5.2	Equipment for Different Treatment Levels	581
16.6	TREATMENT COST ESTIMATES		584
	16.6.1	General Discussion	584
	16.6.2	Model Plant Costs	592
16.7	BASIS FOR REGULATIONS		592
	16.7.1	Evaluation of BPT Treatment Practices	592
	16.7.2	Basis for Proposed BPT Effluent Limitations	595
	16.7.3	Basis for Proposed BCT Limitations	602
	16.7.4	Basis for Proposed BAT Effluent Limitations	602
	16.7.5	Basis for Proposed New Source Performance Standards	604
	16.7.6	Basis for Proposed Pretreatment Standards	609
17.0	HYDROGEN CYANIDE INDUSTRY		611
17.1	INDUSTRY PROFILE		611
	17.1.1	General Description	611
	17.1.2	General Process Description and Raw Materials	611
17.2	WATER USE AND WASTE SOURCE CHARACTERISTICS		614
	17.2.1	Water Use	614
	17.2.2	Waste Source	614
17.3	DESCRIPTION OF PLANTS VISITED AND SAMPLED		617
	17.3.1	Screening	617
	17.3.2	Verification	619
	17.3.3	Toxic Pollutant Concentrations	623
17.4	POLLUTION ABATEMENT OPTIONS		628
	17.4.1	Toxic Pollutants of Concern	628
	17.4.2	Process Modifications and Technology Transfer Options	628
	17.4.3	Best Management Practices	630
	17.4.4	Prevailing Control and Treatment Practices	630
	17.4.5	Advanced Treatment Technologies	630
17.5	SELECTION OF APPROPRIATE TECHNOLOGY AND EQUIPMENT		631

TABLE OF CONTENTS - Continued

			Page
	17.5.1	Technologies for Different Treatment Levels	631
	17.5.2	Equipment for Different Treatment Levels	633
17.6	TREATMENT COST ESTIMATES		635
	17.6.1	General Discussion	635
17.7.	BASIS FOR REGULATIONS		636
	17.7.1	Evaluation of BPT Treatment Practices	636
	17.7.2	Basis for Proposed BPT Limitations	636
	17.7.3	Basis for Proposed BCT Limitations	649
	17.7.4	Basis for Proposed BAT Limitations	649
	17.7.5	Basis for Proposed New Source Performance Standards	652
	17.7.6	Basis for Proposed Pretreatment Standards	652
18.0	SODIUM DICHROMATE INDUSTRY		655
18.1	INDUSTRY PROFILE		655
	18.1.1	General Description	655
	18.1.2	General Process Description and Raw Materials	655
18.2	WATER USE AND WASTE SOURCE CHARACTERISTICS		658
	18.2.1	Water Use	658
	18.2.2	Waste Sources	658
18.3	DESCRIPTION OF PLANTS VISITED AND SAMPLED		661
	18.3.1	Screening	661
	18.3.2	Verification	664
	18.3.3	Toxic Pollutant Concentrations and Loadings	664
18.4	POLLUTION ABATEMENT OPTIONS		668
	18.4.1	Toxic Pollutants of Concern	668
	18.4.2	Process Modifications and Technology Transfer Options	671
	18.4.3	Best Management Practices	671
	18.4.4	Prevailing Control and Treatment Practices	671
	18.4.5	Advanced Treatment Technologies	672
18.5	SELECTION OF APPROPRIATE TECHNOLOGY AND EQUIPMENT		672
	18.5.1	Technology for Different Treatment Levels	672

TABLE OF CONTENTS - Continued

			Page
18.6	TREATMENT COST ESTIMATES		676
	18.6.1	General Discussion	676
	18.6.2	Model Plant Control Costs	677
18.7	BASIS FOR REGULATIONS		681
	18.7.1	BPT Effluent Limitations	681
	18.7.2	BCT Effluent Limitations	688
	18.7.3	BAT Effluent Limitations	690
	18.7.4	NSPS Effluent Limitations	693
	18.7.5	Pretreatment Standards	694
19.0	CARBON DIOXIDE INDUSTRY		697
19.1	SUMMARY OF DETERMINATIONS		697
19.2	ASSESSMENT OF THE WATER POLLUTION POTENTIAL		697
	19.2.1	Production Processes and Effluents	697
19.3	STATUS OF REGULATIONS		699
20.0	CARBON MONOXIDE AND BY-PRODUCT HYDROGEN INDUSTRY		701
20.1	SUMMARY OF DETERMINATIONS		701
20.2	ASSESSMENT OF THE WATER POLLUTION POTENTIAL		701
	20.2.1	Production Processes and Effluents	701
20.3	STATUS OF REGULATIONS		703
21.0	COPPER SULFATE INDUSTRY		705
21.1	INDUSTRIAL PROFILE		705
	21.1.1	General Description	705
	21.1.2	General Process Description and Raw Materials	705
21.2	WATER USE AND WASTE SOURCE CHARACTERISTICS		708
	21.2.1	Water Use	708
	21.2.2	Waste Sources	708
21.3	DESCRIPTION OF PLANTS VISITED AND SAMPLED		711
	21.3.1	Screening	711
	21.3.2	Verification	713
	21.3.3	Toxic Pollutant Concentrations	716
21.4	POLLUTION ABATEMENT OPTIONS		719
	21.4.1	Toxic Pollutants of Concern	719
	21.4.2	Process Modifications and Technology Transfer Options	719

TABLE OF CONTENTS - Continued

			Page
	21.4.3	Best Management Practices	719
	21.4.4	Prevailing Control and Treatment Practices	720
	21.4.5	Advanced Treatment Technologies	720
21.5	SELECTION OF APPROPRIATE TECHNOLOGY AND EQUIPMENT		721
	21.5.1	Technologies for Different Treatment Levels	721
	21.5.2	Equipment for Different Treatment Levels	721
21.6	TREATMENT COST ESTIMATES		724
	21.6.1	General Discussion	724
	21.6.2	Model Plant Cost Estimates	726
21.7	BASIS FOR REGULATIONS		726
	21.7.1	Evaluation of BPT Treatment Practices	726
	21.7.2	Basis for Proposed BPT Effluent Limitations	731
	21.7.3	Basis for Proposed BCT Effluent Limitations	733
	21.7.4	Basis for Proposed BAT Effluent Limitations	733
	21.7.5	Basis for Proposed New Source Performance Standards	738
	21.7.6	Basis for Proposed Pretreatment Standards	740
22.0	NICKEL SULFATE INDUSTRY		741
22.1	INDUSTRIAL PROFILE		741
	22.1.1	General Description	741
	22.1.2	General Process Description and Raw Materials	741
22.2	WATER USE AND WASTE SOURCE CHARACTERISTICS		744
	22.2.1	Water Use	744
	22.2.2	Waste Sources	744
22.3	DESCRIPTION OF PLANTS VISITED AND SAMPLED		747
	22.3.1	Screening	747
	22.3.2	Verification	747
	22.3.3	Summary of Toxic Pollutant Data	752
22.4	POLLUTION ABATEMENT OPTIONS		755
	22.4.1	Toxic Pollutants of Concern	755
	22.4.2	Process Modifications and Technology Transfer Options	755
	22.4.3	Best Management Practices	756

TABLE OF CONTENTS - Continued

			Page
	22.4.4	Prevailing Control and Treatment Practices	756
	22.4.5	Advanced Treatment Technologies	757
22.5	SELECTION OF APPROPRIATE TECHNOLOGY AND EQUIPMENT		757
	22.5.1	Technologies for Different Treatment Levels	757
	22.5.2	Equipment for Different Treatment Levels	757
22.6	TREATMENT COST ESTIMATES		760
	22.6.1	General Discussion	760
	22.6.2	Model Plant Control Costs	761
22.7	BASIS FOR REGULATIONS		767
	22.7.1	Evaluation of BPT Treatment Practices	767
	22.7.2	Basis for Proposed BPT Effluent Limitations	770
	22.7.3	Basis for Proposed BCT Effluent Limitations	770
	22.7.4	Basis for Proposed BAT Effluent Limitations	770
	22.7.5	New Source Performance Standards	777
	22.7.6	Basis for Proposed Pretreatment Standards	777
23.0	SILVER NITRATE INDUSTRY		779
23.1	SUMMARY OF DETERMINATIONS		779
23.2	ASSESSMENT OF THE WATER POLLUTATION POTENTIAL		779
	23.2.1	Production Processes and Effluents	779
23.3	STATUS OF REGULATIONS		781
24.0	SODIUM BISULFITE INDUSTRY		783
24.1	INDUSTRY PROFILE		783
	24.1.1	General Description	783
	24.1.2	General Process Description and Raw Materials	783
24.2	WATER USE AND WASTE SOURCE CHARACTERISTICS		783
	24.2.1	Water Use	783
	24.2.2	Water Sources	787

TABLE OF CONTENTS - Continued

			Page
24.3	DESCRIPTION OF PLANTS VISITED AND SAMPLED		787
	24.3.1	Screening	787
	24.3.2	Verification	787
	24.3.3	Toxic Pollutant Analytical Results	795
24.4	POLLUTION ABATEMENT OPTIONS		800
	24.4.1	Toxic Pollutants of Concern	800
	24.4.2	Prevailing Control and Treatment Practices	800
	24.4.3	Advanced Treatment Technologies	800
24.5	SELECTION OF APPROPRIATE TECHNOLOGY AND EQUIPMENT		801
	24.5.1	Technologies for Different Treatment Levels	801
	24.5.2	Equipment for Different Treatment Levels	801
24.6	TREATMENT COST ESTIMATES		805
	24.6.1	General Discussion	805
	24.6.2	Cost Estimates	806
24.7	BASIS FOR REGULATIONS		813
	24.7.1	Evaluation of BPT Treatment Practices	813
	24.7.2	Basis for Proposed BPT Effluent Limitations	813
	24.7.3	Basis for Proposed BCT Effluent Limitations	822
	24.7.4	Basis for Proposed BAT Effluent Limitations	822
	24.7.5	Basis for Proposed New Source Performance Standards	823
	24.7.6	Basis for Proposed Pretreatment Standards	823
25.0	SODIUM HYDROSULFITE INDUSTRY		827
25.1	INDUSTRY PROFILE		827
	25.1.1	General Description	827
	25.1.2	General Process Description and Raw Materials	827
25.2	WATER USE AND WASTE SOURCE CHARACTERISTICS		830
	25.2.1	Water Use	830
	25.2.2	Waste Sources	830
25.3	DESCRIPTION OF PLANTS VISITED AND SAMPLED		832
	25.3.1	Screening and Verification	832
	25.3.2	Toxic Pollutant Concentrations	834

TABLE OF CONTENTS - Continued

			Page
25.4	POLLUTION ABATEMENT OPTIONS		841
	25.4.1	Toxic Pollutants of Concern	841
	25.4.2	Prevailing Control and Treatment Practices	841
	25.4.3	Advanced Treatment Technologies	842
25.5	SELECTION OF APPROPRIATE TECHNOLOGGY AND EQUIPMENT		842
	25.5.1	Technologies for Different Treatment Levels	842
	25.5.2	Equipment for Different Treatment Levels	842
25.6	TREATMENT COST ESTIMATES		846
	25.6.1	General Discussion	846
	25.6.2	Cost Estimates	846
25.7	BASIS FOR REGULATIONS		846
	25.7.1	Evaluation of BPT Treatment Practices	846
	25.7.2	Basis for Proposed BPT Effluent Limitations	853
	25.7.3	Basis for Proposed BCT Effluent Limitations	855
	25.7.4	Basis for Proposed BAT Effluent Limitations	855
	25.7.5	Basis for Proposed New Source Performance Standards	860
	25.7.6	Basis for Proposed Pretreatment Standards	861
26.0	EXCLUDED SUBCATEGORIES		863
26.1	ALUMINUM SULFATE		863
26.2	AMMONIUM CHLORIDE		864
26.3	AMMONIUM HYDROXIDE		866
26.4	BARIUM CARBONATE		868
26.5	BORAX		870
26.6	BORIC ACID		871
26.7	BROMINE		873
26.8	CALCIUM CARBIDE		874
26.9	CALCIUM CARBONATE		874
26.10	CALCIUM CHLORIDE		877
26.11	CALCIUM HYDROXIDE		878
26.12	CHROMIC ACID		879
26.13	CUPROUS OXIDE		879
26.14	FERRIC CHLORIDE		880
26.15	FERROUS SULFATE		881
26.16	FLUORINE		882

TABLE OF CONTENTS - Continued

		Page
26.17	HYDROCHLORIC ACID	882
26.18	HYDROGEN	885
26.19	IODINE	886
26.20	LEAD MONOXIDE	887
26.21	LITHIUM CARBONATE	887
26.22	MANGANESE SULFATE	888
26.23	NITRIC ACID	889
26.24	OXYGEN AND NITROGEN	890
26.25	POTASSIUM CHLORIDE	894
26.26	POTASSIUM DICHROMATE	895
26.27	POTASSIUM IODIDE	896
26.28	POTASSIUM METAL	899
26.29	POTASSIUM PERMANGANATE	899
26.30	POTASSIUM SULFATE	900
26.31	SODIUM BICARBONATE	901
26.32	SODIUM CARBONATE	901
26.33	SODIUM CHLORIDE	902
26.34	SODIUM FLUORIDE	904
26.35	SODIUM HYDROSULFIDE	905
26.36	SODIUM METAL	906
26.37	SODIUM SILICATE	909
26.38	SODIUM SILICOFLUORIDE	912
26.39	SODIUM SULFITE	912
26.40	SODIUM THIOSULFATE	914
26.41	STANNIC OXIDE	914
26.42	STRONG NITRIC ACID	916
26.43	SULFUR DIOXIDE	918
26.44	SULFURIC ACID INDUSTRY	919
26.45	ZINC OXIDE	922
26.46	ZINC SULFATE	923
REFERENCES		925
BIBLIOGRAPHY		931
APPENDIX A	Analysis of Long-Term Effluent Monitoring Data for the Inorganic Chemicals Industry	A-1
APPENDIX B	pH Control of Industrial Waste Waters in the Inorganic Chemicals Industry	B-1

LIST OF FIGURES

		Page
5-1	Sample flow sheet for metal analysis	59
7-1	Solubility of metal hydroxides and sulfides as a function of pH.	82
7-2	Electrodialysis process	97
8-1	Cumulative distribution of daily concentrations of mercury in treated effluent from plant #251.	120
8-2	Cumulative distribution of daily concentrations of cyanide in treated effluent from plant #765.	121
8-3	Statistical distribution for daily pollution measurements.	124
8-4	Cumulative distribution of 30-day averages of total cyanide in treated effluent from plant #782.	126
8-5	Cumulative distribution of 30-day averages of ammonia in treated effluent from plant #782.	127
8-6	Statistical distributions for 30-day average pollution measurements.	129
11-1	General process diagram for production of chlorine/caustic by mercury cells	156
11-2	General process flow diagram at plant #299 showing the sampling points. Chlorine/caustic (mercury cell) manufacture	161
11-3	General process flow diagram at plant #747 showing the sampling points. Chlorine/caustic (mercury cell) manufacture	165

LIST OF FIGURES - Continued

		Page
11-4	General process flow diagram at plant #167 showing the sampling points. Chlorine/caustic (mercury cell) manufacture	165
11-5	General process flow diagram at Plant #317 showing the sampling points. Chlorine/caustic (mercury cell) manufacture	167
11-6	Level 1 waste water treatment for chlorine-mercury cell subcategory	178
11-7	Level 2 waste water treatment for chlorine-mercury cell subcategory	179
11-8	Annual treatment cost versus production for the chlorine subcategory (mercury cell process)	186
11-9	Annual unit treatment cost versus production for the chlorine subcategory (mercury cell process)	187
11-10	Annual treatment cost versus production for the chlorine subcategory (mercury cell process)	189
11-11	Annual unit treatment cost versus production for the chlorine subcategory (mercury cell process)	190
11-12	Annual treatment cost versus production for the chlorine subcategory (mercury cell process)	191
11-13	Annual unit treatment cost versus production for the chlorine subcategory (mercury cell process)	192
11-14	General process flow diagram for production of chlorine/caustic by diaphragm cells	210
11-15	General process flow diagram at plant #014 showing the sampling points. Chlorine/caustic (diaphragm cell) manufacture	215
11-16	General process flow diagram at plant #261 showing the sampling points. Chlorine/caustic (diaphragm cell) manufacture	218

LIST OF FIGURES - Continued

		Page
11-17	General process flowsheet at Plant #738-A showing the sampling points. Chlorine/caustic (diaphragm cell) manufacture	219
11-18	General process flow diagram at Plant #738-B showing the sampling points. Chlorine/caustic (diaphragm cell) manufacture	220
11-19	General process flow diagram at Plant #736 showing the sampling points. Chlorine/caustic (diaphragm cell) manufacture	222
11-20	General process flow diagram at Plant #967 showing the sampling points. Chlorine/caustic (diaphragm cell) manufacture	223
11-21	Level 1 waste water treatment for chlorine-diaphragm cell subcategory	241
11-22	Level 2 waste water treatment for chlorine-diaphragm cell subcategory	242
11-23	Level 3 waste water treatment for chlorine-diaphragm cell subcategory	243
11-24	Annual treatment cost versus production for the chlorine subcategory (diaphragm cell process)	253
11-25	Annual unit treatment cost versus production for the chlorine subcategory (diaphragm cell process)	254
12-1	General process flow diagram for production of hydrofluoric acid	280
12-2	Production vs. waste flow data for HF plants	284
12-3	General process flow diagram at plant #705 showing the sampling points. Hydrofluoric acid manufacture	289
12-4	General process flow diagram at Plant #251 showing the sampling points. Hydrofluoric acid manufacture	293
12-5	Level 1 waste water treatment for hydrofluoric acid subcategory	302

LIST OF FIGURES - Continued

		Page
12-6	Level 2 waste water treatment for hydrofluoric acid subcategory	303
12-7	Level 3 waste water treatment for hydrofluoric acid subcategory	304
12-8	Level 4 waste water treatment for hydrofluoric acid subcategory	305
12-9	Waste water treatment new source performance standard for hydrofluoric acid subcategory	307
12-10	Annual treatment cost versus production for the hydrofluoric acid subcategory	314
12-11	Annual unit treatment cost versus production for the hydrofluoric acid subcategory	315
12-12	Annual treatment cost versus production for the hydrofluoric acid subcategory (NSPS)	321
12-13	Annual unit treatment cost versus production for the hydrofluoric acid subcategory (NSPS)	322
12-14	Fluoride loads and concentrations discharged at selected hydrofluoric acid plants	330
14-1	General process diagram for production of titanium dioxide (chloride process) from high grade ores	366
14-2	General flow diagram at Plant #559 showing the sampling points. (Titanium dioxide -chloride process manufacture)	370
14-3	General flow diagram at Plant #172 showing the sampling points. Titanium dioxide (chloride process) manufacture	373
14-4	Level 1 waste water treatment for titanium dixoide - chloride process	380
14-5	Level 2 waste water treatment for titanium dioxide - chloride process	381
14-6	Level 3 waste water treatment for titanium dioxide - chloride process	382

LIST OF FIGURES - Continued

		Page
14-7	Annual treatment cost versus production for the titanium dioxide subcategory, chloride process	389
14-8	Annual unit treatment cost versus production for the titanium dioxide subcategory, chloride process	390
14-9	General process flow diagram for production of titanium dioxide by sulfate process	412
14-10	General flow diagram at Plant #559 showing the sampling points. (Titanium dioxide -sulfate process)	418
14-11	Level 1 waste water treatment for titanium dixoide - sulfate process	428
14-12	Level 2 waste water treatment for titanium dioxide - sulfate process	429
14-13	Annual treatment cost versus production for the titanium dioxide subcategory, sulfate process	437
14-14	Annual unit treatment cost versus production for the titanium dioxide subcategory, sulfate process	438
14-15	General process flow diagram of the titanium tetrachloride portion of a titanium dioxide plant using the chloride-ilmenite process.	457
14-16	Level 1 waste water treatment for titanium dioxide - chloride (ilmenite ore) process	469
14-17	Level 2 waste water treatment for titanium dioxide - chloride (ilmenite ore) process	470
15-1	General process flow diagram for production of aluminum fluoride	496
15-2	General process flow diagram at Plant #705 showing the sampling points. (Aluminum fluoride manufacture)	501

LIST OF FIGURES - Continued

		Page
15-3	General process flow diagram at Plant #251 showing the sampling points. Aluminum fluoride manufacture	503
15-4	Level 1 waste water treatment for aluminum fluoride subcategory	513
15-5	Level 2 waste water treatment for aluminum fluoride subcategory	514
15-6	Level 3 waste water treatment for aluminum fluoride subcategory	515
15-7	Level 4 waste water treatment for aluminum fluoride subcategory	516
15-8	Annual treatment cost versus production for the aluminum fluoride subcategory	523
15-9	Annual unit treatment cost versus production for the aluminum fluoride subcategory	524
15-10	Effect of variation of pollutant load on treatment cost at level 1 technology	527
15-11	Effect of variation of pollutant load on treatment cost at level 4 technology	528
15-12	Effect of variation of hydraulic load on treatment cost at level 2 technology	532
15-13	Effect of variation of hydraulic load on treatment cost at level 3 technology	533
15-14	Effect of variation of hydraulic load on treatment cost at level 4 technology	534
16-1	General process diagram for production of anhydrous chrome oxide	555
16-2	General process diagram for production of hydrated chromic oxide	556
16-3	General process diagram for production of chrome yellow	558
16-4	General process diagram for production of molybdenum orange	559

LIST OF FIGURES - Continued

		Page
16-5	General process diagram for production of chrome green	561
16-6	General process diagram for production of zinc yellow	562
16-7	General process diagram for production of chrome pigment complexes	565
16-8	General waste water treatment process flow diagram at Plant #002 showing the sampling points. (Chrome pigment manufacture)	568
16-9	General waste water treatment process flow diagram at Plant #894 showing the sampling points. (Chrome pigment manufacture)	571
16-10	Level 1 waste water treatment for chrome pigments	582
16-11	Level 2 waste water treatment for chrome pigments	583
16-12	Annual treatment cost versus production for the chrome pigments subcategory	590
16-13	Annual unit treatment cost versus production for the chrome pigments subcategory	591
17-1	General process flow diagram for production of hydrogen cyanide by the Andrussow Process	615
17-2	General waste water treatment process flow diagram at Plant #765 showing the sampling points. (Hydrogen cyanide manufacture)	620
17-3	General waste water treatment process flow diagram at Plant #782 showing sampling points. (Hydrogen cyanide manufacture)	624
17-4	Level 1 waste water treatment for hydrogen cyanide subcategory	632
17-5	Level 2 waste water treatment for hydrogen cyanide subcategory	634
17-6	Annual treatment cost as a function of production for the hydrogen cyanide subcategory	640

LIST OF FIGURES - Continued

		Page
17-7	Annual unit treatment cost as a function of production for the hydrogen cyanide subcategory	641
18-1	General process diagram for production of sodium dichromate	659
18-2	General waste water treatment process flow diagram at Plant #493 showing the sampling points. (Sodium dichromate manufacture)	662
18-3	General waste water treatment process flow diagram at Plant #376 showing the sampling points. (Sodium dichromate manufacture)	665
18-4	Level 1 waste water treatment for sodium dichromate subcategory	674
18-5	Level 2 waste water treatment for sodium dichromate subcategory	675
18-6	Relationship of annual treatment cost to production for the sodium dichromate subcategory	682
18-7	Relationship of annual unit treatment cost to production for the sodium dichromate subcategory	683
21-1	General block diagram of the manufacture of copper sulfate	709
21-2	General process flow diagram at plant #034 showing the sampling points. (Copper Sulfate manufacture)	714
21-3	Level 1 waste water treatment for copper sulfate subcategory - batch process	722
21-4	Level 2 waste water treatment for copper sulfate subcategory - batch process	723
22-1	General process flow diagram for nickel sulfate manufacture	745
22-2	General waste water treatment process flow diagram showing sampling points at Plant #369. (Nickel sulfate subcategory.)	748

LIST OF FIGURES - Continued

		Page
22-3	General process flow diagram at Plant #572 showing the sampling points. (Nickel sulfate manufacture.)	750
22-4	General waste water treatment process flow diagram at Plant #120 showing the sampling points. (Nickel sulfate manufacture)	751
22-5	Level 1 waste water treatment for nickel sulfate subcategory - batch process	758
22-6	Level 2 waste water treatment for nickel sulfate subcategory - batch process	759
22-7	Relationship of annual treatment cost to production for the nickel sulfate subcategory	765
22-8	Relationship of annual unit treatment cost to production for the nickel sulfate subcategory	766
24-1	General process flow diagram at Plant #282 showing the sampling points. Sodium bisulfite manufacture	790
24-2	General flow diagram at Plant #586 showing the sampling points. Sodium bisulfite manufacture	791
24-3	General process flow diagram at Plant #987 showing the sampling points. Sodium bisulfite manufacture	794
24-4	Level 1 waste water treatment for sodium bisulfite subcategory - batch process	802
24-5	Level 2 waste water treatment for sodium bisulfite subcategory - batch process	803
24-6	Level 3 waste water treatment for sodium bisulfite subcategory	804
24-7	Variation of annual treatment cost with production for the sodium bisulfite subcategory	810
24-8	Variation of annual unit treatment cost with production (sodium bisulfite subcategory)	811

LIST OF FIGURES - Continued

		Page
25-1	General process flow diagram at Plant #672. (Sodium hydrosulfite manufacture)	831
25-2	General process flow diagram at Plant #672 showing the sampling points. (Sodium hydrosulfite manufacture)	835
25-3	Level 1 waste water treatment for sodium hydrosulfite subcategory	843
25-4	Level 2 waste water treatment for sodium hydrosulfite subcategory	844

LIST OF TABLES

		Page
2-1	Summary of Proposed Regulations - Best Practicable Control Technology Currently Available (BPT)	6
2-2	Summary of Proposed Regulations - Best Available Technology (BAT)	9
2-3	Summary of Proposed Regulations - Pretreatment Standards for Existing Sources (PSES)	12
2-4	Summary of Proposed Regulations - New Source Performance Standards (NSPS)	15
2-5	Summary of Proposed Regulations - Pretreatment Standards for New Sources (PSNS)	19
2-6	Summary of Proposed Regulations - Best Conventional Pollutant Control Technology (BCT)	22
3-1	Recommended List of Toxic Pollutants	28
3-2	Scope of Industry Coverage within the Inorganic Chemicals Manufacturing Point Source Category	34
5-1	Analytical Detection Limits for Metals	62
5-2	Pollutant Frequency Based on Sampling Program Results Including Raw Waste	66
5-3	Distribution of Pollutants According to Subcategory	67
6-1	308 Questionnaire Response Data	73
7-1	Solubility Products of Trace Metals	83
7-2	Comparison of Reverse Osmosis Concepts	99

LIST OF TABLES - Continued

		Page
8-1	Waste Water Treatment Options and Performance Data Summary - Antimony and Arsenic Removal	104
8-2	Waste Water Treatment Options and Performance Data Summary - Beryllium and Cadmium Removal	105
8-3	Waste Water Treatment Options and Performance Data Summary - Copper Removal	106
8-4	Waste Water Treatment Options and Performance Data Summary - Chromium III and Chromium VI Removal	107
8-5	Waste Water Treatment Options and Performance Data Summary - Lead Removal	108
8-6	Waste Water Treatment Options and Performance Data Summary - Mercury II Removal	109
8-7	Waste Water Treatment Options and Performance Data Summary - Nickel Removal	110
8-8	Waste Water Treatment Options and Performance Data Summary - Silver Removal	111
8-9	Waste Water Treatment Options and Performance Data Summary - Selenium and Thallium Removal	112
8-10	Waste Water Treatment Options and Performance Data Summary - Zinc Removal	113
8-11	Estimated Achievable Maximum 30-Day Averages for the Applied Technologies	115
9-1	Prioritization of Toxic Metals Found in Each Subcategory	132
11-1	Subcategory Profile Data Summary	152
11-2	Status of Regulations - Effluent Limitation Guidelines	153
11-3	Summary of Waste Water Flow Data for Chlorine Mercury Cell Plants	159
11-4	Pollutant Concentration and Loads at Plant #299	162

LIST OF TABLES - Continued

		Page
11-5	Pollutant Concentrations and Loads at Verification Plants (1)	163
11-6	Toxic Pollutant Raw Waste Concentrations and Loads at Verification Plants $\frac{mg/l}{kg/kkg}$	172
11-7	Summary of Raw Waste Loadings at Verification Plants	173
11-8	Model Plant Treatment Costs	183
11-9	Model Plant Treatment Costs	184
11-10	Model Plant Treatment Costs	185
11-11	Model Plant Unit Treatment Costs	188
11-12	Estimated Chemical Dechlorination Costs for the Chlor-Alkali Industry	193
11-13	Mercury Discharges from Selected Chlor-Alkali Mercury Cell Plants*	195
11-14	Residual Chlorine Discharges at Selected Chlor-Alkali Plants*	196
11-15	Comparison of Raw Waste Concentrations of Toxic Pollutants with Treatability	198
11-16	Proposed Limitations, BAT	199
11-17	Effluent Concentrations of Toxic Pollutants from Verification Sampling	202
11-18	Subcategory Profile Data Summary	207
11-19	Status of Regulations - Effluent Limitation Guidelines	208
11-20	Waste Water Flows at Diaphragm Cell Chlorine Plants	213
11-21	Pollutant Concentrations and Loads at Screening and Verification Plants	216

LIST OF TABLES - Continued

		Page
11-22	Results of Asbestos Sampling at Diaphragm Cell Plants	225
11-23	Maximum Raw Waste Concentrations of Toxic Metals Observed at Diaphragm Cell Chlorine Plants (mg/l)	226
11-24	Toxic Metal Concentrations and Loads at Screening and Verification Plants $\left(\frac{mg/l}{kg/kkg}\right)$	229
11-25	Summary of Raw Waste Loadings at Screening and Verification Metal Anode Plants	230
11-26	Toxic Metal Concentrations and Loads in Cell Room Waste Waters at Screening and Verification Plants $\left(\frac{mg/l}{kg/kkg}\right)$	232
11-27	Raw Waste Toxic Metals Concentration and Loads in Process Streams Other Than Cell Room Wastes from Screening and Verification Plants	233
11-28	Raw Waste Toxic Organics at a Graphite Anode Plant	234
11-29	Raw Waste Toxic Organics by Waste Water Source at a Graphite Anode Plant	235
11-30	Model Plant Treatment Costs	249
11-31	Model Plant Treatment Costs	250
11-32	Model Plant Treatment Costs	251
11-33	Model Plant Treatment Costs	252
11-34	Summary of Unit Flows at Diaphragm Cell Plants	255
11-35	Comparison of Toxic Metals Treatability with Screening and Verification Sampling Data	257
11-36	Proposed Limitations, BPCTCA	258

LIST OF TABLES - Continued

		Page
11-37	Lead and TSS Discharges from Selected Diaphragm Cell Chlorine Plants (1)	261
11-38	Toxic Pollutants in Diaphragm Cell Plant Effluents	262
11-39	Proposed Limitations, BAT	265
11-40	Proposed Limitations, BCT	269
11-41	Proposed Limitations, NSPS	271
11-42	Comparison of Raw Waste Characteristics at a New Metal Anode Plant with Treatability of Toxic Metals	272
12-1	Subcategory Profile Data Summary	276
12-2	Status of Regulations - Effluent Limitation Guidelines	277
12-3	Water Usage in the Hydrofluoric Acid Subcategory	281
12-4	Waste Water Flow and Reuse Data for the Hydrofluoric Acid Subcategory	282
12-5	Waste Flow from Hydrofluoric Acid Manufacturing Plants	286
12-6	Solid Waste Generated at the Hydrofluoric Acid Plants Sampled	287
12-7	Gypsum Solids Production in the Hydrofluoric Acid Subcategory	288
12-8	Flow and Pollutant Concentration Data of the Sampled Waste Streams for Plant #705 Producing Hydrofluoric Acid	290
12-9	Flow and Pollutant Concentration Data of the Sampled Waste Streams for Plants #705, #251, and #167 Producing Hydrofluoric Acid	292
12-10	Toxic Pollutant Raw Waste Data	296
12-11	Summary of Raw Waste Loadings Found in Screening and Verification Sampling	297

LIST OF TABLES - Continued

		Page
12-12	Model Plant Treatment Costs	310
12-13	Model Plant Treatment Costs	311
12-14	Model Plant Treatment Costs	312
12-15	Model Plant Treatment Costs	316
12-16	Model Plant Treatment Costs	318
12-17	Model Plant Treatment Costs	319
12-18	Model Plant Treatment Costs	320
12-19	Model Plant Treatment Costs	323
12-20	Summary of Waste Water Control and Treatment Technology Employed at Hydrofluoric Acid Plants	325
12-21	Summary of Long-Term Monitoring Data from Four Hydrofluoric Acid Plants	327
12-22	Toxic Pollutant Treated Effluent Data	328
12-23	Development of TSS and Fluoride Limitations	334
12-24	Proposed Limitations, BPCTCA	335
12-25	Proposed Limitations, BAT	343
12-26	Performance of Alternative Technology, Level 3 Treatment	345
12-27	Performance of Alternative Technology, Level 4 Treatment	346
12-28	Toxic Pollutant Raw Waste Data Used to Represent New Sources*	351
12-29	Proposed Limitations, NSPS	353
13-1	Subcategory Profile Data Summary	359
14-1	Subcategory Profile Data Summary	362
14-2	Status of Regulations - Effluent Limitation Guidelines	363

LIST OF TABLES - Continued

		Page
14-3	Water Usage in Titanium Dioxide-Chloride Process/High Grade Ores Subcategory	367
14-4	Waste Water Flow for Titanium Dioxide-Chloride Process Subcategory	369
14-5	Flow and Pollutant Concentration Data of the Sampled Waste Streams of Plant #172 Producing Titanium Dioxide by Chloride-Rutile Process	372
14-6	Flow and Pollutant Concentration Data of the Sampled Waste Streams for Plant #172 Producing Titanium Dioxide (Chloride Process)	374
14-7	Raw Waste Pollutant Data Summary of the Sampled Streams	376
14-8	Model Plant Treatment Costs	386
14-9	Model Plant Treatment Costs	387
14-10	Model Plant Treatment Costs	388
14-11	Model Plant Treatment Costs	391
14-12	Historical Effluent Monitoring Data Summary with Variability Factor	393
14-13	Historical Effluent Monitoring Data Summary with Variability Factors Daily Measurements	394
14-14	Treatment Performance Data of Sampled Plants #599 and #172	395
14-15	Proposed Limitations, BPCTCA	401
14-16	Proposed Limitations, BAT	402
14-17	Proposed Limitations, NSPS	407
14-18	Subcategory Profile Data Summary	409
14-19	Analysis of Ilmenite Ores	410
14-20	Water Usage in Titanium Dioxide - Sulfate Process Subcategory	413

LIST OF TABLES - Continued

		Page
14-21	Raw Waste Characteristics (Industry Data) for Plant #555 (Production of TiO_2 by Sulfate Process)	416
14-22	Flows and Pollutant Concentrations for the Waste Streams Sampled for Plant #559 Producing Titanium Dioxide	419
14-23	Process Waste Water Flow at Plants #555, #694 and #559 Titanium Dioxide (Sulfate Process)	421
14-24	Summary of Raw Waste Loadings Found in Screening and Verification Sampling	423
14-25	Toxic Pollutants: Average Raw Waste Loads and Concentrations	424
14-26	Model Plant Treatment Costs	434
14-27	Model Plant Treatment Costs	435
14-28	Model Plant Treatment Costs	436
14-29	Model Plant Treatment Costs	439
14-30	Historical Effluent Monitoring Data Summary	440
14-31	Verification Results from - Sulfate Process Titanium Dioxide Plant #559	443
14-32	Proposed Limitations, BPTCTA	451
14-33	Proposed Limitations, BAT	453
14-34	Proposed Limitations, NSPS	454
14-35	Subategory Profile Data Summary	456
14-36	Average Water Usage for TiO_2 Production by the Chloride - Ilmenite Process	459
14-37	Average Raw Waste Loads for TiO_2 Production by the Chloride - Ilmenite Process	460
14-38	Summary of Raw Waste Loadings Found in Screening and Verification Sampling	464

LIST OF TABLES - Continued

		Page
14-39	Toxic Pollutant Average Raw Waste Loads and Concentrations	465
14-40	Model Plant Treatment Costs	474
14-41	Model Plant Treatment Costs	475
14-42	Model Plant Treatment Costs	476
14-43	Model Plant Treatment Costs	477
14-44	Model Plant Treatment Costs	478
14-45	Proposed Limitations, BPCTCA	482
14-46	Proposed Limitations, NSPS	487
15-1	Subcategory Profile Data Summary	494
15-2	Status of Regulations - Effluent Limitation Guidelines	495
15-3	Water Usage in the Aluminum Fluoride Subcategory	498
15-4	Waste Water Flow at Plants #837, #705 and #251 for Aluminum Fluoride Subcategory	499
15-5	Solids Generated at Plant #705 and #251 Producing Aluminum Fluoride	499
15-6	Flow and Pollutant Concentration Data of the Sampled Waste Streams for Plant #705 Producing Aluminum Fluoride	502
15-7	Flow and Pollutant Concentration Data of the Sampled Streams for Plant #251 Producing Aluminum Fluoride	504
15-8	Toxic Pollutant Average Raw Waste Loads and Concentrations	507
15-9	Toxic Pollutant Effluent Concentrations During Sampling	508
15-10	Summary of Raw Waste Loadings Found in Screening and Verification Sampling	509

LIST OF TABLES - Continued

		Page
15-11	Model Plant Treatment Costs	520
15-12	Model Plant Treatment Costs	521
15-13	Model Plant Treatment Costs	522
15-14	Model Plant Treatment Costs	525
15-15	Model Plant Treatment Costs	526
15-16	Model Plant Treatment Costs	530
15-17	Model Plant Treatment Costs	531
15-18	Model Plant Treatment Costs	535
15-19	Proposed Limitations, BPCTCA	541
15-20	Proposed Limitations, BAT	544
15-21	Performance of Alternative Technology Level 3 Treatment	545
15-22	Performance of Alternative Technology Level 4 Treatment	546
15-23	Proposed Limitations, NSPS	550
16-1	Subcategory Profile Data Summary	552
16-2	Status of Regulations - Effluent Limitation Guidelines	553
16-3	Water Usage in the Chrome Pigments Subcategory	563
16-4	Summary of Waste Water Flow	566
16-5	Flow, Pollutant, Concentration and Load Data of the Sampled Waste Streams for Plant #002	569
16-6	Flow, Pollutant, Concentration and Load Data for the Sampled Streams at Plant #894	572
16-7	Toxic Pollutant Raw Waste Data	574

LIST OF TABLES - Continued

		Page
16-8	Summary of Raw Waste Loadings Found in Screening and Verification Sampling	575
16-9	Toxic Pollutant Treated Waste Data	576
16-10	Model Plant Treatment Costs	586
16-11	Model Plant Treatment Costs	587
16-12	Model Plant Treatment Costs	588
16-13	Model Plant Treatment Costs	589
16-14	Model Plant Treatment Costs	593
16-15	Summary of Long Term and Verification Effluent Sampling Results at Plant #894	596
16-16	Proposed Limitations, BPCTCA	603
16-17	Proposed Limitations, NSPS	606
17-1	Subcategory Profile Data Summary	612
17-2	Status of Regulations - Effluent Limitation Guidelines	613
17-3	Water Usage in Hydrogen Cyanide - Andrussow Process Subcategory	616
17-4	Waste Flow Data for HCN Production by the Andrussow Process	618
17-5	Flow and Pollutant Data for the Raw and Treated Waste Streams of Plant #765 Producing Hydrogen Cyanide by Andrussow Process	621
17-6	Flow and Pollutant Concentration Data of the Sampled Waste Streams for Plant #765 Producing Hydrogen Cyanide	622
17-7	Flow and Pollutant Concentration Data of the Sampled Waste Streams for Plant #782 Producing Hydrogen Cyanide	625
17-8	Unit Flow and Unit Pollutant Loading for Raw and Treated Waste Effluents at Plant #782	626

LIST OF TABLES - Continued

		Page
17-9	Summary of Pollutant Raw Waste Loading Found in Screening and Verification Sampling	629
17-10	Model Plant Treatment Costs	637
17-11	Model Plant Treatment Costs	638
17-12	Model Plant Treatment Costs	639
17-13	Model Plant Treatment Costs	642
17-14	Statistical Analysis of the 28-Day Effluent Sampling Results on Total Cyanide and Ammonia from Plant #765	645
17-15	Statistical Analysis of Historical Effluent Monitoring Data on Free Cyanide from Plant #765	648
17-16	Proposed Limitations, BPCTCA	650
17-17	Proposed Limitations, BAT	653
17-18	Control Parameter Limitations, NSPS	654
18-1	Subcategory Profile Data Summary	656
18-2	Status of Regulations - Effluent Limitation Guidelines	657
18-3	Water Usage in Sodium Dichromate Subcategory	660
18-4	Flow and Pollutant Concentration Data of the Sampled Waste Streams for Plant #493 Producing Sodium Dichromate	663
18-5	Flow and Pollutant Loading Data of the Sampled Waste Streams for Plant #376 Producing Sodium Dichromate	666
18-6	Flow and Pollutant Loading Data of the Sampled Waste Streams for Plant #398 Producing Sodium Dichromate	667
18-7	Toxic Pollutant Raw Waste Data	669

LIST OF TABLES - Continued

		Page
18-8	Summary of Raw Waste Loadings Found in Screening and Verification Sampling	670
18-9	Model Plant Treatment Costs	678
18-10	Model Plant Treatment Costs	679
18-11	Model Plant Treatment Costs	680
18-12	Model Plant Treatment Costs	684
18-13	Effluent Sampling Data from Sodium Dichromate Plants	687
18-14	Proposed Limitations, BPCTCA	689
18-15	Proposed Limitations, BAT	695
18-16	Control Parameter Limitations, NSPS	696
19-1	Subcategory Profile Data Summary	698
20-1	Subcategory Profile Data Summary	702
21-1	Subcategory Profile Data Summary	706
21-2	Status of Regulations - Effluent Limitation Guidelines	707
21-3	Water Usage in Copper Sulfate Subcategory	710
21-4	Waste Water Flow for the Copper Sulfate Subcategory	712
21-5	Flow and Pollutant Concentration Data of the Sampled Waste Streams for Plant #034 Producing Copper Sulfate	715
21-6	Raw Waste Data	718
21-7	Model Plant Treatment Costs	727
21-8	Model Plant Treatment Costs	728
21-9	Summary of Long-Term Monitoring Data from Plant #034	729

LIST OF TABLES - Continued

		Page
21-10	Treated Effluent Data	730
21-11	Average Pollutant Levels and Removal Efficiency for Plant #034	732
21-12	Proposed Limitations, BAT	736
21-13	Performance of Alternative Technology, Treatment Level 2	739
22-1	Subcategory Profile Data Summary	742
22-2	Status of Regulations - Effluent Limitation Guidelines	743
22-3	Water Use in the Nickel Sulfate Subcategory	746
22-4	Flow and Pollutant Concentration Data of the Sampled Waste Streams for Plants Producing Nickel Sulfate	749
22-5	Toxic Pollutant Raw Waste Data	754
22-6	Model Plant Treatment Costs	762
22-7	Model Plant Treatment Costs	763
22-8	Model Plant Treatment Costs	764
22-9	Model Plant Treatment Costs	768
22-10	Toxic Pollutant Treated Effluent Data	769
22-11	Proposed Effluent Limitations, BAT	773
22-12	Proposed Effluent Limitations, Treatment Level 2	776
23-1	Subcategory Profile Data Summary	780
24-1	Subcategory Profile Data Summary	784
24-2	Status of Regulations - Effluent Limitation Guidelines	785
24-3	Water Usage in the Sodium Bisulfate Subcategory	786

LIST OF TABLES - Continued

		Page
24-4	Waste Water Flow at Plant #987 and #282 for Sodium Bisulfite Subcategory	788
24-5	Flow and Pollutant Load Data of the Sampled Waste Streams for Plant #282 Producing Sodium Bisulfite	789
24-6	Flow and Pollutant Load Data of the Sampled Waste Streams for Plant #586	792
24-7	Flow and Pollutant Load Data of the Sampled Waste Streams for Plant #987	793
24-8	Toxic Pollutant Raw Waste Loads	797
24-9	Summary of Raw Waste Loadings Found in Screening and Verification Sampling	798
24-10	Toxic Pollutant Concentrations Observed in Treated Effluent During Verification Sampling	799
24-11	Model Plant Treatment Costs	807
24-12	Model Plant Treatment Costs	808
24-13	Model Plant Treatment Costs	809
24-14	Model Plant Treatment Costs	812
24-15	Plant Performance Evaluation Summary for Conventional and Nonconventional Pollutants	814
24-16	Proposed Limitations, BPCTCA	818
24-17	Performance of Alterantive Technology, Treatment Level 2	824
24-18	Performance of Alternative Technology, Treatment Level 3	825
25-1	Subcategory Profile Data Summary	828
25-2	Status of Regulations - Effluent Limitation Guidelines	829
25-3	Waste Source Data at Plant #672	833

LIST OF TABLES - Continued

		Page
25-4	Flow, Pollutant, Concentration, and Load Data of the Sampled Waste Streams for Plant #672 Producing Sodium Hydrosulfite	836
25-5	Sampling Results and Treatment System Performance for Toxic Pollutants Plant #672	839
25-6	Summary of Raw Waste Loadings and Concentration Found at a Sodium Hydrosulfite Plant (Formate Process)	840
25-7	Model Plant Treatment Costs	847
25-8	Model Plant Treatment Costs	848
25-9	Subcategory Performance Evaluation Summary at Plant #672 for Conventional and Nonconventional Pollutants in the Effluent	850
25-10	Proposed Limitations, BPCTCA	854
25-11	Proposed Limitations, BAT	858
25-12	Proposed Limitations, NSPS	862
26.2-1	Subcategory Profile Data Summary	865
26.3-1	Subcategory Profile Data Summary	867
26.4-1	Subcategory Profile Data Summary	869
26.6-1	Subcategory Profile Data Summary	872
26.9-1	Subcategory Profile Data Summary	876
26.17-1	Subcategory Profile Data Summary	884
26.23-1	Subcategory Profile Data Summary	891
26.24-1	Subcategory Profile Data Summary	893
26.27-1	Subcategory Profile Data Summary	898
26.32-1	Subcategory Profile Data Summary	903
26.35-1	Subcategory Profile Data Summary	907

LIST OF TABLES - Continued

		Page
26.36-1	Subcategory Profile Data Summary	908
26.37-1	Subcategory Profile Data Summary	911
26.38-1	Subcategory Profile Data Summary	913
26.40-1	Subcategory Profile Data Summary	915
26.42-1	Subcategory Profile Data Summary	917
26.43-1	Subcategory Profile Data Summary	920
26.44-1	Subcategory Profile Data Summary	921

Intentionally Blank Page

ACKNOWLEDGEMENTS

The technical study supporting the proposed regulation was conducted by Jacobs Environmental Division of Jacobs Engineering Group Inc. of Pasadena, California under the direction of Mr. Henry Cruse, Vice President and Mr. Michael Warner, Project Manager. Major contributors were Ms. Bonnie J. Parrott, Mr. Mazhar Mohiuddin, Mr. Mahendra L. Shah, Mr. Carl B. Johnston, Mr. Dennis Merklin, Mr. Mark A. Jackson, Mr. Dale Newkirk, Mr. William E. Rorie, Mr. John H. Taylor, Jr., Dr. Nelson F. Phelan, Ms. Maureen Smith, Mr. Dale Rushneck, Dr. Ben C. Edmondson and Dr. Martin D. Schwartz.

Cooperation and assistance of the Chemical Manufacturers Association and the Chlorine Institute and numerous individual corporations is appreciated for their review and comment on the draft development document. The numerous company and plant personnel who submitted information, opened their plants to the program staff, and otherwise cooperated are acknowledged and thanked for their patience and help.

The guidance and assistance of Mr. Swep Davis, Associate Assistant Admimistrator for Water and Waste Management is greatly appreciated.

Mr. Steve Schatzow, Deputy Assistant Administrator for Water Planning and Standards is gratefully acknowledged for his contributions to the project, both as an administrator and as a member of the Office of General Counsel.

Mr. Walter J. Hunt, former Chief of the Inorganic Chemicals and Services Industries Branch, is acknowledged for a significant contribution in the initial stages of the project.

Ms. Susan Lepow and Staff of the Office of General Counsel are specially acknowledged for their extensive contribution to the drafting of the regulations and this development document.

Ms. Emily Hartnell and Mr. Richard Catz of the Office of Analysis and Evaluation, Mr. Mark Segal, Monitoring and Data Support Division, and Fred Talcott, Office of Planning and Evaluation are acknowledged for their assistance.

Word processing for this project was performed by Ms. Nancy Zrubech with assistance from Ms. Kaye Starr. Their work is especially appreciated.

Preceding page blank

Intentionally Blank Page

SECTION 1

CONCLUSIONS AND SUMMARY

1.1 TOXIC POLLUTANTS

For the purpose of establishing waste water effluent limitation guidelines for existing sources and standards of performance for new sources in this study, the following 35 inorganic chemical product subcategories were screened:

1. Chlor-Alkali
2. Hydrofluoric Acid
3. Titanium Dioxide
4. Aluminum Fluoride
5. Chrome Pigments
6. Hydrogen Cyanide
7. Sodium Dichromate
8. Copper Sulfate
9. Nickel Sulfate
10. Sodium Bisulfite
11. Sodium Hydrosulfite
12. Hydrogen Peroxide
13. Hydrochloric Acid
14. Nitric Acid
15. Sodium Carbonate
16. Sodium Metal
17. Sodium Silicate
18. Sulfuric Acid
19. Carbon Dioxide
20. Carbon Monoxide and by-product Hydrogen
21. Silver Nitrate
22. Ammonium Chloride
23. Ammonium Hydroxide
24. Barium Carbonate
25. Boric Acid
26. Calcium Carbonate
27. Cuprous Oxide
28. Manganese Sulfate
29. Strong Nitric Acid
30. Oxygen and Nitrogen
31. Potassium Iodide
32. Sodium Hydrosulfide
33. Sodium Silicofluoride
34. Sodium Thiosulfate
35. Sulfur Dioxide

The screening studies showed that the plant process waste waters from subcategories 1 through 11 contain the toxic metals (see Table 3-1), cyanide and asbestos. Very few of the organic toxic pollutants were found in process waste streams and those that were identified, in most cases, were present in low level concentrations.

The screening results which indicated the presence of toxic pollutants in significant amounts were largely confirmed by the results of the verification program. Verification sampling

accounted for 50 to 75 percent of the current inorganic chemical production rate in the subcategories covered.

The sources of most of the toxic pollutants found in the raw wastes and treated effluents can be traced to specific process-related raw materials and chemicals used in the manufacturing operations. In the case of certain pollutants found in widely varying amounts or with erratic frequencies of occurrence, the precise identities of the sources remain unknown at this time, but are suspected to be process-related.

1.2 CONTROL AND TREATMENT TECHNOLOGY

A considerable amount of toxic pollutant removal is presently achieved in the industry by the existing control and treatment practices. Additional removal can be accomplished by the application of available and demonstrated technologies which would add to or modify existing treatment systems. Recovery of the heavy metals for value or reuse in a process does not appear to be an attractive alternative in those industries where the product recovery practices now in effect do not already accomplish this.

The treatment of toxic metal-bearing waste streams results in the production of sludges or residues which are potentially hazardous and may require special means for handling and disposal under the Resource Conservation and Recovery Act (RCRA) regulations.

1.3 COSTS OF ADDITIONAL IN-PLANT TREATMENT

The estimated incremental costs of applying the candidate BAT treatment options represent a relatively small proportion of the investment and operating and maintenance costs already committed to the existing BPT level treatment systems. These costs, however, vary widely from industry to industry and are highly dependent on site-specific factors.

1.4 SUBCATEGORIZATION

A review of the product/process basis for subcategorization of the inorganic chemical product subcategories designated for study revealed that certain modifications may be appropriate in the interest of developing effective regulations. The toxic pollutant problem per se impacts subcategorization directly only in the Chlor-Alkali Industry where the use of graphite anodes contributes to the generation of chlorinated hydrocarbons. In the Titanium Dioxide Industry, major process and raw material

differences justify the creation of a separate segment for the sulfate process, the chloride process, and for the chloride process using ilmenite ore. Consideration was given to creating a subcategory for the combined production of hydrofluoric acid and aluminum fluoride in view of their similar waste characteristics and the current practice of combined treatment at several plants. However, combining these products into a single subcategory does not appear to offer any regulatory advantages.

Hydrogen cyanide is produced by the Andrussow process and as a by-product in the manufacture of acrylonitrile. By-product hydrogen cyanide will be covered under its primary product, acrylonitrile, in the Inorganic Chemicals Manufacturing Category. The hydrogen cyanide subcategory includes only manufacture by the Andrussow process.

1.5 RESTUDY OF REMANDED REGULATIONS

The Fourth Circuit, U.S. Court of Appeals remanded effluent limitations guidelines promulgated for 11 major inorganic chemical products. E.I. du Pont de Nemours v. Train, 541 F.2d 1018 (4th. Cir. 1976) revised in Part 430 U.S. 112 (1977). The factors affecting the control and treatment of pollutant discharges in those industries have been studied in response to the remanded issues. It has been concluded that alternative control and treatment technologies to those originally considered for BAT and NSPS may be appropriate.

Intentionally Blank Page

SECTION 2

RECOMMENDATIONS

On the basis of the toxic pollutant screening and verification results and the evaluation of applicable technologies for discharge control and treatment, it is recommended that effluent limitation guidelines, new source performance standards and pretreatment standards for new and existing sources be proposed for the following 11 inorganic chemical manufacturing subcategories:

Chlor-Alkali	Sodium Dichromate
Hydrofluoric Acid	Copper Sulfate
Titanium Dioxide	Nickel Sulfate
Aluminum Fluoride	Sodium Bisulfite
Chrome Pigments	Sodium Hydrosulfite
Hydrogen Cyanide	

Table 2-1 summarizes the proposed regulations for Best Practicable Control Technology Currently Available (BPT). Summaries of proposed regulations for Best Available Technology (BAT), Pretreatment Standards, and New Source Performance Standards are given in Tables 2-2, 2-3, 2-4, 2-5, and 2-6. These tables indicate that Chlor-Alkali has been divided into two segments and Titanium Dioxide in three segments before listing the numerical effluent limitations for the proposed regulations.

In addition, in the following subcategories, although toxic pollutant discharges have not been found in significant quantities, discharge of conventional and nonconventional pollutants should be controlled by the permitting authority.

Hydrogen Peroxide	Sodium Metal
Hydrochloric Acid	Sodium Silicate
Nitric Acid	Sulfuric Acid
Sodium Carbonate	

TABLE 2-1. SUMMARY OF PROPOSED REGULATIONS - BEST PRACTICABLE CONTROL TECHNOLOGY CURRENTLY AVAILABLE (BPT)

Subcategory	Parameter	Effluent Limitations		
		Max 30-day Avg	24-hr Max	pH Range
		kg/kkg (or lb/1000 lb.) of product		
Chlor-alkali, Mercury Cells	TSS	0.32	0.64	
	Mercury	0.00014	0.00028	
	pH			6.0 to 9.0
Chlor-alkali, Diaphragm Cells	TSS	0.51	1.1	
	Chromium (T)	0.00088	0.0023	
	Copper (T)	0.0044	0.011	
	Lead (T)	0.010	0.026	
	Nickel (T)	0.0044	0.011	
	Zinc (T)	0.0044	0.011	
	pH			6.0 to 9.0
Hydrofluoric Acid	TSS	5.3	11.0	
	Flouride (T)	2.9	6.1	
	Antimony (T)	0.044	0.088	
	Chromium (T)	0.0055	0.011	
	Copper (T)	0.027	0.054	
	Lead (T)	0.016	0.033	
	Nickel (T)	0.0093	0.019	
	Zinc (T)	0.030	0.060	
	pH			6.0 to 9.0
Sodium Dichromate	TSS	0.22	0.44	
	Hexavalent Chromium	0.0044	0.0088	
	Chromium (T)	0.00050	0.0009	
	pH			6.0 to 9.0
Titanium Dioxide (sulfate process)	TSS	30	110	
	Iron (T)	1.2	4.1	
	Arsenic (T)	0.24	0.46	
	Antimony (T)	0.38	0.71	
	Cadmium (T)	0.070	0.11	
	Chromium (T)	0.070	0.13	

(continued)

TABLE 2-1. Continued

Subcategory	Parameter	Effluent Limitations		
		Max 30-day Avg	24-hr Max	pH Range
		kg/kkg (or lb/1000 lb.) of product		
Titanium Dioxide (sulfate process)	Copper (T)	0.24	0.46	
	Lead (T)	0.14	0.21	
	Nickel (T)	0.10	0.18	
	Zinc (T)	0.24	0.50	
	pH			6.0 to 9.0
Titanium Dioxide (Chloride Process)	TSS	6.4	23	
	Iron (T)	0.25	0.84	
	Chromium (T)	0.14	0.027	
	pH			6.0 to 9.0
Titanium Dioxide (Chloride Ilmenite Process)	TSS	7.7	28	
	Iron (T)	0.30	1.0	
	Antimony (T)	0.096	0.18	
	Arsenic (T)	0.060	0.11	
	Cadmium (T)	0.012	0.019	
	Chromium (T)	0.012	0.023	
	Copper (T)	0.060	0.11	
	Lead (T)	0.036	0.054	
	Nickel (T)	0.024	0.046	
	Zinc (T)	0.060	0.013	
	pH			6.0 to 9.0
Aluminum Fluoride	TSS	1.2	2.4	
	Fluoride (T)	0.63	1.3	
	Chromium (T)	0.0012	0.0024	
	Nickel (T)	0.0024	0.0048	
	pH			6.0 to 9.0
Copper Sulfate	TSS	0.023	0.069	
	Copper (T)	0.0010	0.0030	
	Nickel (T)	0.0020	0.0060	
	Selenium (T)	0.00050	0.0015	
	pH			6.0 to 9.0

(continued)

TABLE 2-1. Continued

Subcategory	Parameter	Effluent Limitations		
		Max 30-day Avg	24-hr Max	pH Range
		kg/kkg (or lb/1000 lb.) of product		
Hydrogen Cyanide	TSS	2.0	5.4	
	Ammonia-N	4.3	12	
	Cyanide (Free)	0.016	0.043	
	Cyanide (T)	0.23	0.65	
	pH			6.0 to 10.5
Nickel Sulfate	TSS	0.032	0.096	
	Nickel (T)	0.0020	0.0060	
	pH			6.0 to 9.0
Chrome Pigments	TSS	3.9	9.4	
	Antimony (T)	0.051	0.12	
	Cadmium (T)	0.020	0.048	
	Chromium (T)	0.12	0.29	
	Copper (T)	0.042	0.10	
	Lead (T)	0.15	0.36	
	Nickel (T)	0.018	0.043	
	Zinc (T)	0.12	0.29	
	pH			6.0 to 9.0
Sodium Bisulfite	TSS	0.033	0.12	
	COD	1.2	3.6	
	Chromium (T)	0.00017	0.00032	
	Copper (T)	0.00075	0.0014	
	Lead (T)	0.00045	0.00086	
	Nickel (T)	0.00030	0.00057	
	Zinc (T)	0.00075	0.0014	
	pH			6.0 to 9.0
Sodium Hydrosulfite	TSS	0.12	0.44	
	COD	13	46	
	pH			6.0 to 9.0

TABLE 2-2. SUMMARY OF PROPOSED REGULATIONS - BEST AVAILABLE TECHNOLOGY (BAT)

Subcategory	Parameter	Effluent Limitations	
		Max 30-day Avg	24-hr Max
		kg/kkg (or lb/1000 lb.) of product	
Chlor-alkali Mercury Cells	Arsenic (T)	0.00021	0.00046
	Cadmium (T)	0.00011	0.00024
	Copper (T)	0.00011	0.00024
	Lead (T)	0.00034	0.00074
	Mercury (T)	0.00010	0.00022
	Nickel (T)	0.00021	0.00046
	Silver (T)	0.00015	0.00032
	Zinc (T)	0.00042	0.00092
	Total Residual Chlorine	0.00042	0.00071
Chlor-alkali Diaphragm Cells	Chromium (T)	0.00044	0.00097
	Copper (T)	0.0035	0.00077
	Lead (T)	0.0019	0.0042
	Nickel (T)	0.00088	0.0019
	Zinc (T)	0.0035	0.0077
	Total Residual Chlorine	0.0018	0.0030
Hydrofluoric Acid	Fluoride (T)	1.0	2.2
	Antimony (T)	0.023	0.047
	Chromium (T)	0.0013	0.0027
	Copper (T)	0.0097	0.019
	Lead (T)	0.0020	0.0040
	Nickel (T)	0.0050	0.010
	Zinc (T)	0.017	0.035
Sodium Dichromate	Chromium (T)	0.0022	0.0045
	Hexavalent Chromium	0.00035	0.00070
	Nickel (T)	0.0012	0.0024
	Zinc (T)	0.0033	0.0066

(continued)

TABLE 2-2. Continued

Subcategory	Parameter	Effluent Limitations	
		Max 30-day Avg	24-hr Max
		kg/kkg (or lb/1000 lb.) of product	
Titanium Dioxide Sulfate Process	Iron (T)	1.2	4.1
	Arsenic (T)	0.24	0.46
	Antimony (T)	0.38	0.71
	Cadmium (T)	0.070	0.11
	Chromium (T)	0.070	0.13
	Copper (T)	0.24	0.46
	Lead (T)	0.14	0.21
	Nickel (T)	0.10	0.18
	Zinc (T)	0.24	0.52
Titanim Dioxide Chloride Process	Iron (T)	0.25	0.84
	Chromium (T)	0.014	0.027
Titanium Dioxide Chloride Ilmenite Process	Iron (T)	0.30	1.0
	Antimony (T)	0.096	0.18
	Arsenic (T)	0.060	0.11
	Cadmium (T)	0.012	0.019
	Chromium (T)	0.012	0.023
	Copper (T)	0.060	0.11
	Lead (T)	0.036	0.054
	Nickel (T)	0.024	0.046
	Zinc (T)	0.060	0.013
Aluminum Fluoride	Fluoride (T)	0.036	0.75
	Chromium (T)	0.00048	0.00096
	Nickel (T)	0.0020	0.0040
Chrome Pigments	Antimony (T)	0.051	0.12
	Cadmium (T)	0.020	0.048
	Chromium (T)	0.12	0.29
	Copper (T)	0.042	0.10
	Lead (T)	0.15	0.36
	Nickel (T)	0.018	0.043
	Zinc (T)	0.12	0.29

(continued)

TABLE 2-2. Continued

Subcategory	Parameter	Effluent Limitations	
		Max 30-day Avg	24-hr Max
		kg/kkg (or lb/1000 lb.) of product	
Copper Sulfate	Antimony (T)	0.00038	0.00072
	Arsenic (T)	0.00047	0.00089
	Cadmium (T)	0.000047	0.000089
	Chromium (T)	0.000047	0.000089
	Copper (T)	0.00038	0.00072
	Lead (T)	0.000047	0.000089
	Nickel (T)	0.000094	0.00018
	Selenium (T)	0.000094	0.00018
	Zinc (T)	0.00038	0.00072
Hydrogen Cyanide	Ammonia - N	4.3	12
	Cyanide (Free)	0.16	0.043
	Cyanide (T)	0.23	0.65
	Total Residual Chlorine	0.011	0.031
Nickel Sulfate	Antiomony (T)	0.00027	0.00081
	Chromium (T)	0.000010	0.000034
	Copper (T)	0.00027	0.00081
	Lead (T)	0.000034	0.00010
	Nickel (T)	0.00014	0.00042
	Zinc (T)	0.00027	0.00080
Sodium Bisulfite	COD	1.2	3.6
	Chromium (T)	0.00017	0.00032
	Copper (T)	0.00075	0.0014
	Lead (T)	0.00045	0.00086
	Nickel (T)	0.00030	0.00057
	Zinc (T)	0.00075	0.0014
Sodium Hydrosulfite	COD	13	46
	Zinc (T)	0.0024	0.0046
	Nickel (T)	0.00094	0.0018
	Lead (T)	0.0014	0.0027
	Chromium (T)	0.00047	0.00087

TABLE 2-3. SUMMARY OF PROPOSED REGULATIONS - PRETREATMENT STANDARDS FOR EXISTING SOURCES (PSES)

Subcategory	Parameter	Effluent Limitations			
		Max 30-day Avg		24-hr Max	
		(mg/l) or	(kg/kkg)	(mg/l) or	(kg/kkg)
Chlor-alkali Mercury Cells	Arsenic (T)	0.10	0.00021	0.22	0.00046
	Cadmium (T)	0.050	0.00011	0.11	0.00024
	Copper (T)	0.050	0.00011	0.11	0.00024
	Lead (T)	0.16	0.00034	0.35	0.00074
	Mercury (T)	0.048	0.00010	0.10	0.00022
	Nickel (T)	0.10	0.00021	0.22	0.00046
	Silver	0.070	0.00015	0.15	0.00032
	Zinc	0.20	0.00042	0.44	0.00092
Chlor-alkali Diaphragm Cells	Chromium (T)	0.050	0.00044	0.11	0.00097
	Copper (T)	0.40	0.0035	0.88	0.0077
	Lead (T)	0.22	0.0019	0.48	0.0042
	Nickel (T)	0.10	0.00088	0.22	0.0019
	Zinc (T)	0.40	0.0035	0.88	0.0077
Hydrofluoric Acid	Fluoride (T)	30	1.0	66	2.2
	Antimony (T)	0.70	0.023	1.4	0.047
	Chromium (T)	0.040	0.0013	0.080	0.0027
	Copper (T)	0.29	0.0097	0.58	0.019
	Lead (T)	0.060	0.0020	0.12	0.0040
	Nickel (T)	0.15	0.0050	0.30	0.010
	Zinc (T)	0.52	0.017	1.0	0.035
Sodium Dichromate	Chromium (T)	0.32	0.0022	0.64	0.0045
	Hexavalent Chromium	0.050	0.00035	0.10	0.0070
	Nickel (T)	0.17	0.0012	0.34	0.0024
	Zinc (T)	0.47	0.0033	0.94	0.0066
Titanium Dioxide Sulfate Process	Iron (T)	2.5	1.2	8.5	4.1
	Arsenic (T)	0.50	0.24	0.95	0.46
	Antimony (T)	0.80	0.38	1.5	0.71
	Cadmium (T)	0.15	0.07	0.24	0.11
	Chromium (T)	0.14	0.07	0.27	0.13
	Copper (T)	0.50	0.24	0.95	0.46

(continued)

TABLE 2-3. Continued

Subcategory	Parameter	Effluent Limitations			
		Max 30-day Avg (mg/l)	or (kg/kkg)	24-hr Max (mg/l)	or (kg/kkg)
	Lead (T)	0.30	0.14	0.45	0.21
	Nickel (T)	0.20	0.10	0.37	0.18
	Zinc (T)	0.50	0.24	1.1	0.52
Titanium Dioxide Chloride Process	Iron (T)	2.5	0.25	8.4	0.84
	Chromium (T)	0.14	0.014	0.27	0.027
Titanium Dioxide Chloride Ilmenite Process	Iron (T)	2.5	0.30	8.5	1.0
	Antimony (T)	0.80	0.096	1.5	0.18
	Arsenic (T)	0.50	0.060	0.95	0.11
	Cadmium (T)	0.10	0.012	0.16	0.019
	Chromium (T)	0.10	0.012	0.19	0.023
	Copper (T)	0.50	0.060	0.95	0.11
	Lead (T)	0.30	0.036	0.45	0.054
	Nickel (T)	0.20	0.024	0.38	0.046
	Zinc (T)	0.50	0.060	1.1	0.013
Aluminum Fluoride	Fluoride (T)	30	0.36	63	0.75
	Chromium (T)	0.040	0.00048	0.080	0.00096
	Nickel (T)	0.17	0.0020	0.34	0.0040
Chrome Pigments	Antimony (T)	0.48	0.051	1.2	0.12
	Cadmium (T)	0.19	0.020	0.46	0.048
	Chromium (T)	1.1	0.12	2.6	0.29
	Copper (T)	0.40	0.042	0.96	0.10
	Lead (T)	1.4	0.15	3.4	0.36
	Nickel (T)	0.17	0.018	0.41	0.043
	Zinc (T)	1.1	0.12	2.6	0.29
Copper Sulfate	Copper (T)	0.40	0.00038	0.76	0.00072
	Nickel (T)	0.10	0.000094	0.19	0.00018
	Arsenic (T)	0.50	0.00047	0.95	0.00089
	Selenium (T)	0.10	0.000094	0.19	0.00018
	Cadmium (T)	0.050	0.000047	0.095	0.000089
	Zinc (T)	0.40	0.00038	0.76	0.00072

(continued)

TABLE 2-3. Continued

Subcategory	Parameter	Effluent Limitations			
		Max 30-day Avg		24-hr Max	
		(mg/l) or	(kg/kkg)	(mg/l) or	(kg/kkg)
	Chromium (T)	0.050	0.000047	0.095	0.00089
	Lead (T)	0.05	0.000047	0.095	0.000089
	Antimony (T)	0.40	0.00038	0.76	0.00072
Hydrogen Cyanide	Cyanide (Free)	0.27	0.016	0.74	0.043
	Cyanide (T)	4.0	0.23	11	0.65
	Ammonia-N	75	4.3	210	12
Nickel Sulfate	Antimony (T)	0.40	0.00027	1.2	0.00081
	Chromium (T)	0.050	0.00010	0.15	0.000034
	Copper (T)	0.40	0.00027	1.2	0.00081
	Lead (T)	0.050	0.000034	0.15	0.00010
	Nickel (T)	0.20	0.00014	0.60	0.00042
	Zinc (T)	0.40	0.00027	1.2	0.00080
Sodium Bisulfate	COD	680	1.2	2400	3.6
	Chromium (T)	0.11	0.00017	0.22	0.00032
	Zinc (T)	0.50	0.00075	1.0	0.0014
	Copper (T)	0.50	0.00075	1.0	0.0014
	Lead (T)	0.30	0.00045	0.57	0.00086
	Nickel (T)	0.20	0.003	0.38	0.00057
Sodium Hydrosulfite	COD	2700	13	9700	46
	Zinc (T)	0.50	0.0024	0.95	0.0046
	Nickel (T)	0.20	0.00094	0.38	0.0018
	Lead (T)	0.30	0.0014	0.57	0.0027
	Chromium (T)	0.10	0.00047	0.19	0.00089

TABLE 2-4. SUMMARY OF PROPOSED REGULATIONS - NEW SOURCE PERFORMANCE STANDARDS (NSPS)

Subcategory	Parameter	Effluent Limitations		
		Max 30-day Avg	24-hr Max	pH Range
		kg/kkg (or lb/1000 lb.) of product		
Chlor-alkali Mercury Cells	TSS	0.32	0.64	
	Arsenic (T)	0.00021	0.00046	
	Cadmium (T)	0.00011	0.00024	
	Copper (T)	0.00011	0.00024	
	Lead (T)	0.00034	0.00074	
	Mercury (T)	0.00010	0.00022	
	Nickel (T)	0.00021	0.00046	
	Silver	0.00015	0.00032	
	Zinc	0.00042	0.00092	
	Total Residual Chlorine	0.00042	0.00071	
	pH			6.0 to 9.0
Chlor-alkali Diaphragm Cells	TSS	0.10	0.20	
	Chromium (T)	0.00047	0.00097	
	Lead (T)	0.00044	0.00097	
	Total Residual Chlorine	0.0018	0.0030	
	pH			6.0 to 9.0
Hydrofluoric Acid	TSS	0.41	0.86	
	Fluoride (T)	0.18	0.38	
	Chromium (T)	0.00024	0.00048	
	Nickel (T)	0.0009	0.0018	
	Zinc (T)	0.0030	0.0060	
	pH			6.0 to 9.0
Sodium Dichromate	TSS	0.18	0.35	
	Chromium (T)	0.0022	0.0045	
	Hexavalent Chromium	0.00035	0.00070	
	Nickel (T)	0.0012	0.0024	
	Zinc (T)	0.0033	0.0066	
	pH			6.0 to 9.0

(continued)

TABLE 2-4. Continued

Subcategory	Parameter	Effluent Limitations		
		Max 30-day Avg	24-hr Max	pH Range
		kg/kkg (or lb/1000 lb.) of product		
Titanium Dioxide (Sulfate Process)	TSS	30	110	
	Iron (T)	1.2	4.1	
	Arsenic (T)	0.24	0.46	
	Antimony (T)	0.38	0.71	
	Cadmium (T)	0.07	0.11	
	Chromium (T)	0.07	0.13	
	Copper (T)	0.24	0.46	
	Lead (T)	0.14	0.21	
	Nickel (T)	0.10	0.18	
	Zinc (T)	0.24	0.52	
	pH			6.0 to 9.0
Titanium Dioxide (Chloride Process)	TSS	4.5	16	
	Iron (T)	0.18	0.59	
	Chromium (T)	0.005	0.01	
	pH			6.0 to 9.0
Titanium Dioxide (Chloride Ilmenite process)	TSS	1.2	4.3	
	Iron (T)	0.050	0.17	
	Antimony (T)	0.025	0.048	
	Arsenic (T)	0.016	0.030	
	Cadmium (T)	0.0023	0.0037	
	Chromium (T)	0.0012	0.0023	
	Copper (T)	0.0090	0.017	
	Lead (T)	0.0019	0.0029	
	Nickel (T)	0.0053	0.010	
	Zinc (T)	0.015	0.032	
	pH			6.0 to 9.0
Aluminum Fluoride	TSS	0.81	1.7	
	Fluoride (T)	0.36	0.75	
	Chromium (T)	0.00050	0.0010	
	Nickel (T)	0.0020	0.0040	
	pH			6.0 to 9.0

(continued)

TABLE 2-4. Continued

Subcategory	Parameter	Effluent Limitations		
		Max 30-day Avg	24-hr Max	pH Range
		kg/kkg (or lb/1000 lb.) of product		
Chrome Pigments	TSS	3.9	9.4	
	Antimony (T)	0.042	0.10	
	Cadmium (T)	0.0011	0.0026	
	Chromium (T)	0.0053	0.013	
	Copper (T)	0.0053	0.013	
	Lead (T)	0.0053	0.013	
	Mercury (T)	0.0011	0.0026	
	Nickel (T)	0.0053	0.013	
	Zinc (T)	0.0021	0.0050	
	pH			6.0 to 9.0
Copper Sulfate	TSS	0.023	0.069	
	Copper (T)	0.00038	0.00072	
	Nickel (T)	0.000094	0.00018	
	Arsenic (T)	0.00047	0.00089	
	Selenium (T)	0.000094	0.00018	
	Cadmium (T)	0.000047	0.000089	
	Zinc (T)	0.00038	0.00072	
	Chromium (T)	0.000047	0.000089	
	Lead (T)	0.000047	0.000089	
	Antimony (T)	0.00038	0.00072	
	pH			6.0 to 9.0
Hydrogen Cyanide	TSS	2.0	5.4	
	Cyanide (Free)	0.016	0.043	
	Cyanide (T)	0.23	0.65	
	Ammonia-N	4.3	12	
	Total Residual Chlorine	0.011	0.031	
	pH			6.0 to 10.5
Nickel Sulfate	TSS	0.032	0.096	
	Antimony (T)	0.00027	0.00081	
	Chromium (T)	0.000010	0.000034	
	Copper (T)	0.00027	0.00081	
	Lead (T)	0.000034	0.00010	
	Nickel (T)	0.00014	0.00042	
	Zinc (T)	0.00027	0.00080	
	pH			6.0 to 9.0

(continued)

TABLE 2-4. Continued

Subcategory	Parameter	Effluent Limitations		
		Max 30-day Avg	24-hr Max	pH Range
		kg/kkg (or lb/1000 lb.) of product		
Sodium Bisulfite				
	TSS	0.033	0.12	
	COD	1.2	3.6	
	Chromium (T)	0.00017	0.00032	
	Zinc (T)	0.00075	0.0014	
	Copper (T)	0.00075	0.0014	
	Lead (T)	0.00045	0.00086	
	Nickel (T)	0.00030	0.00057	
	pH			6.0 to 9.0
Sodium Hydrosulfite				
	TSS	0.18	0.44	
	COD	13	46	
	Chromium (T)	0.00047	0.00089	
	Lead (T)	0.0014	0.0027	
	Nickel (T)	0.00094	0.0018	
	Zinc	0.0024	0.0046	
	pH			6.0 to 9.0

TABLE 2-5. SUMMARY OF PROPOSED REGULATIONS - PRETREATMENT STANDARDS FOR NEW SOURCES (PSNS)

Subcategory	Parameter	Effluent Limitations			
		Max 30-day Avg (mg/l)	or (kg/kkg)	24-hr Max (mg/l)	or (kg/kkg)
Chlor-alkali Mercury Cells	Arsenic (T)	0.10	0.00021	0.22	0.00046
	Cadmium (T)	0.050	0.00011	0.11	0.00024
	Copper (T)	0.050	0.00011	0.11	0.00024
	Lead (T)	0.16	0.00034	0.35	0.00074
	Mercury (T)	0.048	0.00010	0.10	0.00022
	Nickel (T)	0.10	0.00021	0.22	0.00046
	Silver	0.070	0.00015	0.15	0.00032
	Zinc	0.20	0.00042	0.44	0.00092
Chlor-alkali Diaphragm Cells	Chromium (T)	0.050	0.00044	0.11	0.00097
	Lead (T)	0.050	0.00044	0.11	0.00097
Hydrofluoric Acid	Fluoride (T)	30	0.18	63	0.38
	Chromium (T)	0.040	0.00024	0.080	0.00048
	Nickel (T)	0.15	0.00090	0.30	0.0018
	Zinc (T)	0.50	0.0030	1.0	0.0060
Sodium Dichromate	Chromium (T)	0.32	0.0022	0.64	0.0045
	Hexavalent Chromium	0.050	0.00035	0.10	0.00070
	Nickel (T)	0.17	0.0012	0.34	0.0024
	Zinc (T)	0.47	0.0033	0.94	0.0066
Titanium Dioxide (sulfate process)	Iron (T)	2.5	1.2	8.5	4.1
	Arsenic (T)	0.50	0.24	0.95	0.46
	Antimony (T)	0.80	0.38	1.5	0.71
	Cadmium (T)	0.15	0.07	0.24	0.11
	Chromium (T)	0.14	0.07	0.27	0.13
	Copper (T)	0.50	0.24	0.95	0.46
	Lead (T)	0.30	0.14	0.45	0.21
	Nickel (T)	0.20	0.10	0.37	0.18
	Zinc (T)	0.50	0.24	1.1	0.52
Titanium Dioxide (chloride process)	Iron (T)	1.8	0.18	5.9	0.59
	Chromium (T)	0.05	0.005	0.10	0.01

(continued)

TABLE 2-5. Continued

Subcategory	Parameter	Effluent Limitations			
		Max 30-day Avg (mg/l)	or (kg/kkg)	24-hr Max (mg/l)	or (kg/kkg)
Titanium Dioxide Chloride Ilmenite Process	Iron (T)	1.6	0.050	5.4	0.017
	Antimony (T)	0.80	0.025	1.5	0.048
	Arsenic (T)	0.50	0.016	0.95	0.030
	Cadmium (T)	0.075	0.0023	0.12	0.0037
	Chromium (T)	0.040	0.0012	0.076	0.0023
	Copper (T)	0.029	0.0090	0.055	0.017
	Lead (T)	0.060	0.0019	0.090	0.0029
	Nickel (T)	0.17	0.0053	0.32	0.010
	Zinc (T)	0.47	0.015	0.99	0.032
Aluminum Fluoride	Fluoride (T)	30	0.36	63	0.75
	Chromium (T)	0.04	0.00050	0.08	0.0010
	Nickel (T)	0.17	0.0020	0.34	0.0040
Chrome Pigments	Antimony (T)	0.40	0.042	0.96	0.10
	Cadmium (T)	0.010	0.0011	0.024	0.0026
	Chromium (T)	0.050	0.0053	0.12	0.013
	Copper (T)	0.050	0.0053	0.12	0.013
	Lead (T)	0.050	0.0053	0.12	0.013
	Mercury (T)	0.010	0.0011	0.024	0.0026
	Nickel (T)	0.050	0.0053	0.12	0.013
	Zinc (T)	0.020	0.0021	0.048	0.0050
Copper Sulfate	Antimony (T)	0.40	0.00038	0.76	0.00072
	Arsenic (T)	0.50	0.00047	0.95	0.00089
	Cadmium (T)	0.050	0.000047	0.095	0.000089
	Chromium (T)	0.050	0.000047	0.095	0.000089
	Copper (T)	0.40	0.00038	0.76	0.00072
	Lead (T)	0.050	0.000047	0.095	0.000089
	Nickel (T)	0.10	0.000094	0.19	0.00018
	Selenium (T)	0.10	0.000094	0.19	0.00018
	Zinc (T)	0.40	0.00038	0.76	0.00072
Hydrogen Cyanide	Ammonia - N	75	4.3	210	12
	Cyanide (Free)	0.27	0.016	0.74	0.043
	Cyanide (T)	4.0	0.23	11	0.65

(continued)

TABLE 2-5. Continued

Subcategory	Parameter	Effluent Limitations			
		Max 30-day Avg (mg/l)	or (kg/kkg)	24-hr Max (mg/l)	or (kg/kkg)
Nickel Sulfate	Antimony (T)	0.40	0.00027	1.2	0.00081
	Chromium (T)	0.05	0.000010	0.15	0.000034
	Copper (T)	0.40	0.00027	1.2	0.00081
	Lead (T)	0.05	0.000034	0.15	0.00010
	Nickel (T)	0.20	0.00014	0.60	0.00042
	Zinc (T)	0.40	0.00027	1.2	0.00080
Sodium Bisulfite	COD	680	1.2	2400	3.6
	Chromium (T)	0.11	0.00017	0.22	0.00032
	Zinc (T)	0.5	0.00075	1.0	0.0014
	Copper (T)	0.5	0.00075	1.0	0.0014
	Lead (T)	0.3	0.00045	0.57	0.00086
	Nickel (T)	0.2	0.00030	0.38	0.00057
Sodium Hydrosulfite	COD	2700	13	9700	46
	Zinc (T)	0.50	0.0024	0.95	0.0046
	Nickel (T)	0.20	0.00094	0.38	0.0018
	Lead (T)	0.30	0.0014	0.57	0.0027
	Chromium (T)	0.10	0.00047	0.19	0.00089

TABLE 2-6. SUMMARY OF PROPOSED REGULATIONS - BEST CONVENTIONAL POLLUTANT CONTROL TECHNOLOGY (BCT)

Subcategory	Parameter	Effluent Limitations		
		Max 30-day Avg	24-hr Max	pH Range
		kg/kkg (or lb/1000 lb.) of product		
Chlor-alkali Diaphragm Cell	TSS	0.36	0.72	
	pH			6.0 to 9.0
Hydrofluoric Acid	TSS	2.3	4.8	
	pH			6.0 to 9.0

SECTION 3

INTRODUCTION

3.1 AUTHORITY

3.1.1 The Federal Water Pollution Control Act Amendments

The Federal Water Pollution Control Act (the Act) Amendments of 1972, 33 USC 1251 et seq., stated the national goal of attaining by July 1, 1983, a water quality which provides for the protection and propagation of fish and shellfish, for recreation in or on the nation's waters, and the goal of eliminating the discharge of pollutants into navigable waters by 1985.

Purpose and Authority

The Federal Water Pollution Control Act Amendments of 1972 established a comprehensive program to "restore and maintain the chemical, physical, and biological integrity of the Nation's waters," Section 101(a). By July 1, 1977, existing industrial dischargers were required to achieve "effluent limitations requiring the application of the best practicable control technology currently available" ("BPT"), Section 301(b)(1)(A); and by July 1, 1983, these dischargers were required to achieve "effluent limitations requiring the application of the best available technology economically achievable...which will result in reasonable further progress toward the national goal of eliminating the discharge of all pollutants" ("BAT"), Section 301(b)(2)(A). New industrial direct dischargers were required to comply with Section 306 new source performance standards ("NSPS"), based on best available demonstrated technology; and new and existing dischargers to publicly owned treatment works ("POTW") were subject to pretreatment standards under Sections 307(b) and (c) of the Act. While the requirements for direct dischargers were to be incorporated into National Pollutants Discharge Elimination System (NPDES) permits issued under Section 402 of the Act, pretreatment standards were made enforceable directly against dischargers to POTW (indirect dischargers).

Although Section 402(a)(1) of the 1972 Act authorized the setting of requirements for direct dischargers on a case-by-case basis, Congress intended that for the most part control requirements would be based on regulations promulgated by the Administrator of EPA. Section 304(b) of the Act required the Administrator to promulgate regulations providing guidelines for effluent limitations setting forth the degree of effluent reduction attainable through the application of BPT and BAT. Moreover, Sections 304(c) and 306 of the Act required promulgation of regulations for NSPS, and Sections 304(f), 307(b), and 307(c) required promulgation of regulations for pretreatment standards. In addition to these regulations for designated industry categories, Section 307(a) of the Act required the Administrator to promulgate effluent standards applicable to all dischargers of toxic pollutants. Finally, Section 501(a) of the Act authorized the Administrator to prescribe any additional regulations "necessary to carry out his functions" under the Act.

The EPA was unable to promulgate many of these regulations by the dates contained in the Act. In 1976, EPA was sued by several environmental groups, and in settlement of this lawsuit EPA and the plaintiffs executed a "Settlement Agreement" which was approved by the Court. This Agreement required EPA to develop a program and adhere to a schedule for promulgating BAT effluent limitations guidelines, pretreatment standards, and new source performance standards for 65 "priority" pollutants and classes of pollutants for 21 major industries. See Natural Resources Defense Council, Inc. v. Train, 8 ERC 2120 (D.D.C. 1976), modified March 9, 1979.

On December 27, 1977, the President signed into law the Clean Water Act of 1977. Although this law makes several important changes in the Federal water pollution control program, its most significant feature is its incorporation of several of the basic elements of the Settlement Agreement program for toxic pollution control. Sections 301(b)(2)(A) and 301(b)(2)(C) of the Act now require the achievement by July 1, 1984 of effluent limitations requiring application of BAT for "toxic" pollutants, including the 65 "priority" pollutants and classes of pollutants which Congress declared "toxic" under Section 307(a) of the Act. Likewise, EPA's programs for new source performance standards and pretreatment standards are now aimed principally at toxic pollutant controls. Moreover, to strengthen the toxics control program Section 304(e) of the Act authorizes the Administrator to prescribe "best management practices" ("BMPs") to prevent the release of toxic and hazardous pollutants from plant site runoff,spillage or leaks, sludge or waste disposal, and drainage from raw material storage associated with, or ancillary to, the manufacturing or treatment process.

In keeping with its emphasis on toxic pollutants, the Clean Water Act of 1977 also revises the control program for non-toxic pollutants. Instead of BAT for "conventional" pollutants identified under Section 304(a)(4) (including biochemical oxygen demand, suspended solids, fecal coliform and pH), the new Section 301(b)(2)(E) requires achievement by July 1, 1984, of "effluent limitations requiring the application of the best conventional pollutant control technology" ("BCT"). The factors considered in assessing BCT for an industry include the cost of attaining a reduction in effluents and the effluent reduction benefits derived compared to the costs and effluent reduction benefits from the discharge of publicly owned treatment works (Section 304(b)(4)(B). For non-toxic, nonconventional pollutants, Sections 301(b)(2)(A) and (b)(2)(F) require achievement of BAT effluent limitations within three years after their establishment or July 1, 1984, whichever is later, but not later than July 1, 1987.

The purpose of these proposed regulations is to provide effluent limitations guidelines for BPT, BAT, and BCT, and to establish NSPS, pretreatment standards for existing sources (PSES), and pretreatment standards for new sources (PSNS), under Sections 301, 304, 306, 307, and 501 of the Clean Water Act.

The United States Environmental Protection Agency (the Agency) was entrusted with the responsibility to carry out the requirements of the Act, and initiated an intensive effort to develop the necessary regulatory means which would achieve the stepwise reduction and elimination of pollutant discharge practices in all major U.S. Industries. For the Inorganic Chemicals Manufacturing Point Source Category, the Agency designed a comprehensive, two phase program to identify the control parameters and establish the technological basis for regulations development. Phase I covered 22 Major Inorganic Chemical Products (1), and the final regulations for these industrial subcategories were published in the Federal Register on March 12, 1974. The regulations included specific numerical effluent limitations and standards of performance for both existing and new sources. Zero-discharge requirements specified for many of the subcategories were to be applied either at the 1977 BPT step or later. Phase II of the Agency's effort resulted in the promulgation of BPT based effluent limitations for an additional group of 27 subcategories referred to as Significant Inorganic Chemical Products (2). The interim final regulations were published on May 22, 1975. Taken together, the two groups of regulations cover 49 inorganic chemical subcategories many of which include more than one specific chemical product. Although some toxic pollutant parameters were covered in cases where a direct relationship to the process was obvious (e.g., mercury and/or lead in the Chlor-Alkali Industry), the main thrust of the regulations was the

control of the bulk pollutant parameters which accounted, in terms of quantity, for most of the pollution loading of navigable waters attributable to the manufacture of inorganic chemicals.

3.1.2 Court Remand of Regulations

On March 10, 1976, the United States Court of Appeals for the Fourth Circuit decided in E.I. duPont de Nemours & Company, et al. v. Train, 541 F.2d 1018 (4th Cir. 1976), to set aside and remand for reconsideration a number of general definitions and specific discharge regulations promulgated in 1974. These regulations are all within Title 40, Parts 401 and 415 of the Code of Federal Regulations and are listed below:

General Provisions
- 401.11 (i) - Definition of effluent limitations
- 401.11 (q) - Definition of process waste water
- 401.11 (r) - Definition of process waste water pollutant

Chlor-Alkali
- 415.63 - BATEA

Hydrochloric Acid
- 415.72 - BPCTCA
- 415.73 - BATEA
- 415.75 - New sources

Hydrofluoric Acid
- 415.82 - BPCTCA
- 415.83 - BATEA
- 415.85 - New sources

Hydrogen Peroxide
- 415.93 - BATEA
- 415.95 - New sources

Nitric Acid
- 415.102 - BPCTCA
- 415.103 - BATEA
- 415.105 - New sources

Sodium Carbonate
415.152 - BPCTCA
415.153 - BATEA
415.155 - New sources

Sodium Dichromate
415.173 - BATEA

Sodium Metal
415.182 - BPCTCA
415.183 - BATEA
415.185 - New sources

Sodium Silicate
415.192 - BPCTCA
415.193 - BATEA
415.195 - New sources

Sulfuric Acid
415.210 - Applicability
415.212 - BPCTCA
415.213 - BATEA
415.215 - New sources

Titanium Dioxide
415.220 - Applicability
415.222 - BPCTCA
415.223 - BATEA
415.225 - New sources

For the most part, the main target of the remand was the zero discharge regulations from which the industry petitioners sought relief on grounds of technological infeasibility. During 1975, the Agency funded a special study of the remand issues (3) and was prepared to propose amended regulations. Where appropriate, the results of that study are included in an Addendum to the present report covering those remanded regulations for subcategories which have been excluded from the present study.

Following the court remand of the Phase I final regulations, the Agency revoked the Phase II interim final and proposed regulations published in May, 1975, for Aluminum Fluoride, Chrome Pigments, Hydrogen Cyanide, and Sodium Silicofluoride. In this instance, the Agency's intent was to reconsider the specific effluent limitations established for

these industries (1977 step) in the light of information made available on process differences between plants and additional data on the actual concentrations and treatability of the regulated discharge constituents. The information was presented to the Agency in the form of various documents prepared by members of the industries concerned. These sources are also cited in the appropriate sections of this report.

3.1.3 The Settlement Agreement

A consent decree was issued in a suit filed by four environmental groups in Natural Resources Defense Council v. Train, 8 ERC 2120 (June 8, 1976) modified 12 ERC 1833 (December 15, 1978). The consent decree contained a Settlement Agreement wherein the Agency agreed to regulate 65 toxic pollutants under Sections 301, 304, 306, and 307 of the Act in accordance with the schedule and provisions stipulated. The original list of 65 chemicals and classes of chemicals attached to the Settlement Agreement was redefined to cover 129 chemical substances, including specific organic compounds, pesticides and their metabolites, polychlorinated biphenyls (PBC's), cyanide, 13 heavy metals and asbestos. Table 3-1 lists the 129 toxic pollutants (sometimes referred to in the literature as "priority pollutants").

TABLE 3-1. RECOMMENDED LIST OF TOXIC POLLUTANTS

Compound Name

1. *Acenaphthene
2. *Acrolein
3. *Acrylonitrile
4. *Benzene
5. *Benzidine
6. *Carbon tetrachloride (tetrachloromethane)

*Chlorinated benzenes (other than dichlorobenzenes)

7. *Chlorobenzene
8. 1,2,4-Trichlorobenzene
9. Hexachlorobenzene

*Chlorinated ethanes (including 1,2-dichloroethane, 1,1,1,-trichloroethane and hexachloroethane)

10. 1.2-Dichloroethane
11. 1,1,1-Trichloroethane

12. Hexachloroethane
13. 1,1-Dichloroethane
14. 1,1,2-Trichloroethane
15. 1,1,2,2-Tetrachloroethane
16. Chloroethane

*Chloroalkyl ethers (chloromethyl, chloroethyl and mixed ethers)

17. Bis(chloromethyl) ether
18. Bis(2-chloroethyl) ether
19. 2-Chloroethyl vinyl ether (mixed)

*Chlorinated naphthalene

20. 2-Chloronaphthalene

*Chlorinated phenols (other than those listed elsewhere; includes trichlorophenols and chlorinated cresols)

21. 2,4,6-Trichlorophenol
22. Parachlorometa cresol
23. *Chloroform (trichloromethane)
24. *2-Chlorophenol

*Dichlorobenzenes

25. 1,2-Dichlorobenzene
26. 1,3-Dichlorobenzene
27. 1,4-Dichlorobenzene

*Dichlorobenzidine

28. 3,3'-Dichlorobenzidine

*Dichloroethylenes (1,1-dichloroethylene and 1,2-dichloroethylene)

29. 1,1-Dichloroethylene
30. 1,2-Trans-dichloroethylene
31. *2,4-Dichlorophenol

*Dichloropropane and dichloropropene

32. 1,2-Dichloropropane
33. 1,2-Dichloropropylene (1,3-dichloropropene)
34. *2,4-Dimethylphenol

*Dinitrotoluene

35. 2,4-Dinitrotoluene
36. 2,6-Dinitrotoluene
37. *1,2-Diphenylhydrazine
38. *Ethylbenzene
39. *Fluoranthene

*Haloethers (others than those listed elsewhere)

40. 4-Chlorophenyl phenyl ether
41. 4-Bromophenyl phenyl ether
42. Bis(2-chloroisopropyl) ether
43. Bis(2-chloroethoxy) methane

*Halomethanes (other than those listed elsewhere)

44. Methylene chloride (dichloromethane)
45. Methyl chloride (chloromethane)
46. Methyl bromide (bromomethane)
47. Bromoform (tribromomethane)
48. Dichlorobromomethane
49. Trichlorofluoromethane
50. Dichlorodifluoromethane
51. Chlorodibromomethane
52. *Hexachlorobutadiene
53. *Hexachlorocyclopentadiene
54. *Isophorone
55. *Naphthalene
56. *Nitrobenzene

*Nitrophenols (including 2,4-dinitrophenol and and dinitrocresol)

57. 2-Nitrophenol
58. 4-Nitrophenol
59. 2,4-Dinitrophenol
60. 4,6-Dinitro-o-cresol

*Nitrosamines

61. N-nitrosodimethylamine
62. N-nitrosodiphenylamine
63. N-nitrosodi-n-propylamine
64. *Pentachlorophenol
65. *Phenol

*Phthalate esters

66. Bis(2-ethylhexyl) phthalate
67. Butyl benzyl phthalate
68. Di-n-butyl phthalate
69. Di-n-octyl phthalate
70. Diethyl phthalate
71. Dimethyl phthalate

*Polynuclear aromatic hydrocarbons

72. Benzo(a)anthracene (1,2-benzanthracene)
73. Benzo (a) pyrene (3,4-benzopyrene)
74. 3,4-Benzofluoranthene
75. Benzo(k)fluoranthane (11,12-benzofluoranthene)
76. Chrysene
77. Acenaphthylene
78. Anthracene
79. Benzo(ghi)perylene (1,12-benzoperylene)
80. Fluorene
81. Phenanthrene
82. Dibenzo (a,h)anthracene (1,2,5,6-dibenzanthracene)
83. Indeno (1,2,3-cd)pyrene (2,3,-o-phenylenepyrene)
84. Pyrene
85. *Tetrachloroethylene
86. *Toluene
87. *Trichloroethylene
88. *Vinyl chloride (chlorethylene)

*Pesticides and metabolites

89. *Aldrin
90. *Dieldrin
91. *Chlordane (technical mixture & metabolites)

DDT and metabolites

92. 4,4'-DDT
93. 4,4'-DDE (p,p'-DDX)
94. 4,4'DDD (p,p'-TDE)

*Endosulfan and metabolites

95. A-endosulfan-Alpha
96. B-endosulfan-Beta
97. Endosulfan sulfate

*Endrin and metabolites

98. Endrin
99. Endrin aldehyde

*Heptachlor and metabolites

100. Heptachlor
101. Heptachlor epoxide

*Hexachlorocyclohexane (all isomers)

102. A-BHC-Alpha
103. B-BHC-Beta
104. R-BHC (lindane)-Gamma
105. G-BHC-Delta

*Polychlorinated biphenyls (PCB's)

106. PCB-1242 (Arochlor 1242)
107. PCB-1254 (Arochlor 1254)

108. PCB-1221 (Arochlor 1221)
109. PCB-1232 (Arochlor 1232)
110. PCB-1248 (Arochlor 1248)
111. PCB-1260 (Arochlor 1260)
112. PCB-1016 (Arochlor 1016)
113. *Toxaphene
114. *Antimony (Total)
115. *Arsenic (Total)
116. *Asbestos (Fibrous)
117. *Beryllium (Total)
118. *Cadmium (Total)
119. *Chromium (Total)
120. *Copper (Total)
121. *Cyanide (Total)
122. *Lead (Total)
123. *Mercury (Total)
124. *Nickel (Total)
125. *Selenium (Total)
126. *Silver (Total)
127. *Thallium (total)
128. *Zinc (Total)
129. **2,3,7,8-Tetrachlorodibenzo-p-dioxin (TCDD)

*Specific compounds and chemicals classes as listed in the Consent Decree.

**This compound was specifically listed in the Consent Decree. Because of the extreme toxicity of TCDD, the Agency recommended that laboratories not acquire analytical standards for this compound. Categories and specified the scope of application of effluent limitations, new source performance standards, and pretreatment standards within each category in terms of the Standard Industrial Classification (SIC) code numbers. For the Inorganic Chemicals Manufacturing Point Source Category, the major industries included are:

SIC 2812 - Alkalies and Chlorine
SIC 2813 - Industrial Gases
SIC 2816 - Inorganic Pigments
SIC 2819 - Industrial Inorganic Chemicals, Not Elsewhere Classified

Within these industries, the Agency has identified 63 subcategories listed in Table 3-2 for the initial study of the toxic pollutant problem. Most of these subcategories, 49 in all, had already been covered by BPT and BAT discharge regulations promulgated in 1974 and 1975. Those regulations established point of discharge control levels for the conventional parameters such as pH, TSS, TOC, BOD, and oil and grease. In many cases, specific chemical parameters were regulated, particularly Arsenic, Chromium, Copper, Mercury,

TABLE 3-2. SCOPE OF INDUSTRY COVERAGE WITHIN THE INORGANIC CHEMICALS MANUFACTURING POINT SOURCE CATEGORY

Subcategories Designated for Initial Study	
1. Chlor-Alkali	33. Sodium Silicofluoride
2. Hydrofluoric Acid	34. Sodium Thiosulfate
3. Hydrogen Peroxide	35. Sulfur Dioxide
4. Titanium Dioxide	36. Bromine
5. Aluminum Fluoride	37. Calcium Hydroxide
6. Chrome Pigments	38. Chromic Acid
7. Hydrogen Cyanide	39. Fluorine
8. Sodium Dichromate	40. Hydrogen
9. Carbon Dioxide	41. Iodine
10. Carbon Monoxide/Hydrogen	42. Potassium Chloride
11. Copper Sulfate	43. Stannic Oxide
12. Nickel Sulfate	44. Zinc Sulfate
13. Silver Nitrate	45. Calcium Carbide
14. Sodium Bisulfite	46. Calcium Oxide
15. Sodium Hydrosulfite	47. Potassium Metal
16. Hydrochloric Acid	48. Potassium Sulfate
17. Nitric Acid	49. Sodium Bicarbonate
18. Sodium Carbonate	50. Borax
19. Sodium Metal	51. Ferric Chloride
20. Sodium Silicate	52. Lead Monoxide
21. Sulfuric Acid	53. Sodium Fluoride
22. Ammonium Chloride	54. Aluminum Chloride
23. Ammonium Hydroxide	55. Aluminum Sulfate
24. Barium Carbonate	56. Potassium Dichromate
25. Boric Acid	57. Calcium Chloride
26. Calcium Carbonate	58. Sodium Chloride
27. Copper Oxide	59. Sodium Sulfite
28. Manganese Sulfate	60. Potassium Permanganate
29. Strong Nitric Acid	61. Zinc Oxide
30. Oxygen and Nitrogen	62. Lithium Carbonate
31. Potassium Iodide	63. Ferrous Sulfate
32. Sodium Hydrosulfide	

Nickel, Lead, Selenium, Zinc, and Cyanide, which are now included in the list of toxic pollutants. Other regulated parameters such as Al, Ba, Fe, ammonia, fluoride and sulfide are not presently listed as toxic chemicals but are to be treated as nonconventional pollutants under future discharge limitations and standards of performance.

Nearly half of the initial 63 subcategories have been recommended for exclusion from this study on the basis of specific provisions for such exclusion under Paragraph 8 of the Settlement Agreement. The bases for these exclusions are as follows:

No. 63, Ferrous Sulfate, is already covered by the Titanium Dioxide - Sulfate Process subcategory and does not require separate consideration.

No's. 60, 61, and 62 (Potassium Permanganate, Zinc Oxide, and Lithium Carbonate) have only one plant each (or one plant with a wet process discharge), and represent nonsignificant discharges of toxic pollutants. No's. 27 and 28 (Copper Oxide and Manganese Sulfate) are also single plants, but were covered in screening.

No's. 36 through 59 have existing BPT or BAT regulations requiring zero discharge of process waste water to navigable water and there are no known discharges to a POTW. Continued enforcement of the existing regulations will provide adequate control of toxic pollutants.

The remaining 35 nonexcluded subcategories (Table 3-2, No's. 1 through 35) are covered in this report. This group also includes the 11 subcategories whose final regulations were remanded for restudy in E.I. duPont de Nemours and Company, et al. v. Train, supra, and the four additional subcategories whose interim, final or proposed regulations were revoked and reserved by the Agency.

It was anticipated by the Agency that a substantial number of the 35 industries to be screened would also qualify for exclusion under Paragraph 8 on the basis of the analytical results obtained from the process waste water toxic pollutant screening program. A preliminary prioritization indicated that the initial detailed study and regulation development would focus on the first 15 subcategories.

This judgment has been substantially supported by the analytical results of the screening programs and a number of additional exclusions are being recommended for subcategories in which nonsignificant toxic pollutant discharges have been determined. A detailed presentation of the analytical

results is given under the individual subcategory sections of this report. The additional recommended exclusions include the following:

No.	Subcategory
1.	Hydrogen Peroxide
2.	Carbon Dioxide
3.	Carbon Monoxide/Hydrogen
4.	Hydrochloric Acid
17.	Nitric Acid
18.	Sodium Carbonate
19.	Sodium Metal
21.	Sulfuric Acid
22.	Ammonium Chloride
23.	Ammonium Hydroxide
24.	Barium Carbonate
25.	Boric Acid
26.	Calcium Carbonate
27.	Copper Oxide (one plant)
28.	Manganese Sulfate (one plant)
29.	Strong Nitric Acid
30.	Oxygen and Nitrogen
31.	Potassium Iodide
32.	Sodium Hydrosulfide
34.	Sodium Thiosulfate
35.	Sulfur Dioxide

Silver Nitrate, No. 13, and Sodium Silicofluoride, No. 33, are being deferred for future study under Phase II of the BAT regulation development program for Inorganic Chemicals. This deferrment was caused by problems with plant access during the course of the present study.

3.2 GENERAL APPROACH AND METHODOLOGY

Initiating and undertaking a comprehensive study of the toxic pollutant problem in the Inorganic Chemicals Industry was preceded by an intensive evaluation by the Agency of the kinds of data and supporting information that should be assembled as a basis for the development of regulations. All major decisions on the identity of pollutants and the establishment of effluent limitations and standards of performance for each subcategory had to be supportable by documented evidence collected from operating production facilities. Similarly, the necessary information on production rates, processes, raw materials, water use, waste sources, and treatment technologies in practice had to be acquired with sufficient detail and breadth of coverage to permit an analysis of the engineering and economic variables that are characteristic of each subcategory. Toxic pollutant

control regulations would be based on the application of best available technology for treatment and reliable performance evaluations for the removal of specific waste substances.

The following paragraphs briefly describe the major study tasks and their results as they are presented in this report.

3.2.1 Industry Data Base Development and Subcategorization Review

Information from individual manufacturers and previous study documents were reviewed in detail and an evaluation of the appropriateness of subcategorization was performed. Section 4 presents a discussion of the factors considered in subcategorization and presents the rationale for maintaining the present scheme of subcategorization for the industries studied.

3.2.2 The Screening and Verification Sampling Programs

The collection of detailed analytical data on conventional, nonconventional and toxic pollutant concentrations in raw and treated process waste streams was completed in a two-phase sampling program. The first phase, screening, was designed to provide a representative, one-time 72-hour sampling of a plant in each subcategory in order to determine the presence of toxic pollutants and to evaluate their potential environmental significance. The sampling and analytical methodology is described in Section 5, along with the basis for making a decision on the need for verification sampling in each subcategory.

3.2.3 Engineering Evaluations

Section 6 describes the procedures and sources used in developing the industry productions and waste water generation characteristics that form the basis of the model plant concept. The sources of detailed process and waste treatment information are also presented. Section 7 contains an evaluation of treatment technology presently applied in BPT systems and advanced technologies that may be recommended for BAT and NSPS applications. Section 8 provides estimates of the treatability of selected toxic and nonconventional pollutants to be applied in the development of achievable performance characteristics for specific technologies. Section 8 also presents a discussion of the approach taken in the statistical analysis of long-term monitoring data. The statistically derived parameters, including variability factors for 24-hour maxima and maximum 30-day averages are presented in Appendix A. Section 9 lays the groundwork for the estimation of pollutant removal performances for each nonexcluded subcategory. The candidate toxic pollutants to be controlled in each subcategory are identified

on the basis of the screening and verification data and the rationale for the application of advanced level technologies is presented.

3.2.4 Treatment System Cost Estimates

Section 10 presents the general approach to cost estimating, discusses the assumptions made, and gives the detailed cost estimates for alternative levels of treatment and control. For each subcategory verified, the total estimated installed cost of a typical BPT treatment system is developed on the basis of the model plant design specifications and estimated incremental costs are given for each of the advanced level treatment alternatives.

3.3 GENERAL CRITERIA FOR EFFLUENT LIMITATIONS

3.3.1 BPT Effluent Limitations

The factors considered in defining best practicable control technology currently available (BPT) include the total cost of applying such technology in relation to the effluent reductions derived from such application, the age of equipment and facilities involved, the process employed, non-water quality environmental impacts (including energy requirements), and other factors the Administrator considers appropriate (Section 304(b)(1)(B)). In general, the BPT technology level represents the average of the best existing performances of plants of various ages, sizes, processes, or other common characteristics. Where existing performance is uniformly inadequate, BPT may be transferred from a different subcategory or category. BPT focuses on end-of-pipe treatment rather than process changes or internal controls, except where such are common industry practice. The cost/benefit inquiry for BPT is a limited balancing, committed to EPA's discretion, which does not require the Agency to quantify benefits in monetary terms. See, e.g., American Iron and Steel Institute v. EPA, 526 F.2d 1027 (3rd Cir. 1975). In balancing costs in relation to effluent reduction benefits, EPA considers the volume and nature of existing discharges, the volume and nature of discharges expected after application of BPT, the general environmental effects of the pollutants, and the cost and economic impacts of the required pollution control level. The Act does not require or permit consideration of water quality problems attributable to particular point sources or industries, or water quality improvements in particular water bodies. Therefore, EPA has not considered these factors. See Weyerhaeuser Company v. Costle, 590 F.2d 1011 (D.C. Cir. 1978).

3.3.2 BAT Effluent Limitations

The factors considered in assessing best available technology economically achievable (BAT) include the age of equipment and facilities involved, the process employed, process changes, non-water quality environmental impacts (including energy requirements), (Section 304(b)(2)(B)). At a minimum, the BAT technology level represents the best economically achievable performance of plants of various ages, sizes, processes, or other shared characteristics. As with BPT, uniformly inadequate performance may require transfer of BAT from a different subcategory or category. BAT may include process changes or internal controls, even when these technologies are not common industry practice. The statutory assessment of BAT "considers" costs, but does not require a balancing of costs against effluent reduction benefits (see Weyerhaeuser v. Costle, supra). In developing the proposed BAT, however, EPA has given substantial weight to the reasonableness of costs. The Agency has considered the volume and nature of discharges, the volume and nature of discharges expected after application of BAT, the general environmental effects of the pollutants, and the costs and economic impacts of the required pollution control levels. Despite this expanded consideration of costs, the primary determinant of BAT is effluent reduction capability. As a result of the Clean Water Act of 1977, 33 USC 1251 et seq., the achievement of BAT has become the principal national means of controlling water pollution due to toxic pollutants.

3.3.3 BCT Effluent Limitations

The 1977 amendments added Section 301(b)(2)(E) to the Act, establishing "best conventional pollutant control technology" (BCT) for discharges of conventional pollutants from existing industrial point sources. Conventional pollutants are those defined in Section 304(b)(4) - BOD, TSS, fecal coliform, and pH and oil and grease, designated by the Administrator as "conventional" on July 30, 1979, 44 FR 44501. BCT is not an additional limitation, but replaces BAT for the control of conventional pollutants. BCT requires that limitations for conventional pollutants be assessed in light of a new "cost reasonableness" test, which involves a comparison of the cost and level of reduction of conventional pollutants from the discharge of publicly owned treatment works to the cost and level of reduction of such pollutants from a class or category of industrial sources. In its review of BAT for industries not covered by the NRDC Consent Decree, the Agency promulgated BCT levels based on a methodology described at 44 FR 50732 (August 26, 1979). This methodology compares subcategory removal costs (dollars per pound of pollutant, measuring from BPT to BAT) with costs experienced by POTWs. EPA applied this methodology to the costs of removal of conventional pollutants in the 11

subcategories of the inorganic chemicals manufacturing industry affected by these proposed regulations. Models were chosen to represent the average size plant in each subcategory. The total annualized cost of each control technology and the total pounds per year of TSS removed were then computed for each of these model plants. The Agency is proposing, based on this analysis, that BCT should be equal to BPT except in the case of the diaphragm cell portion of the Chlor-Alkali subcategory. In this subcategory, EPA is proposing limitations based on dual media filtration. The costs of this technology in the diaphragm cell portion of the Chlor-Alkali subcategory are explained below in the discussion of the treatment options for that subcategory. For all other subcategories, EPA is proposing that BCT equal BPT either because additional removal failed the cost test or because EPA is proposing BAT equal to BPT.

For Aluminum Fluoride and Sodium Dichromate, the cost in dollars per pound for removal of additional conventional pollutants is $2.06 and $13.40, respectively. For Chlor-Alkali - mercury cell process, Hydrogen Cyanide, and Sodium Hydrosulfite, BCT is being proposed equal to BPT because the technology added for BAT does not impact the removal of conventional pollutants. EPA is proposing a distinct BCT standard for the Chlor-Alkali - diaphragm cell process and Hydrofluoric Acid as discussed below. In the remaining subcategories, BPT is proposed equal to BAT which automatically makes BCT equal to BPT.

In the Chlor-Alkali - mercury cell process segment and the Hydrogen Cyanide and Sodium Hydrosulfite Subcategories, BCT is being proposed equal to BPT because the technology added for BAT does not impact the removal of conventional pollutants.

In the Aluminum Fluoride subcategory, the cost for removal of additional conventional pollutants is $2.06 per pound. Thus, BCT is proposed equal to BPT because the cost is greater than the $1.15 per pound cost for removal of conventional pollutants from a publically owned treatment works (POTW). The calculation is as follows:

$$\frac{\$1.77\ (\text{kg}/2.2\ \text{lb.})}{(1.2\ \text{kg/kkg} - 0.81\ \text{kg/kkg})} = \$2.06 \text{ per pound of TSS removed}$$

Where $1.77 is the increased cost for BAT treatment over BPT treatment cost in dollars per kkg of production from Table 15-9, 1.2 kg/kkg is proposed for the BPT suspended solids limitation from Table 15-19, 0.81 kg/kkg is achievable by use of BAT technology applied to suspended solids removal developed for Table 15-23. A conversion factor of 2.2 pounds per kilogram is used.

In the Sodium Dichromate Subcategory, the cost for removal of additional conventional pollutants is $13.40 per pound. Thus, BCT is proposed equal to BPT because the cost is greater then the $1.15 per pound cost for removal of conventional pollutants from a publically owned treatment works. The calculation is as follows:

$$\frac{\$1.18\ (kg/2.2\ lb.)}{(0.22\ kg/kkg - 0.18\ kg/kkg)} = \$13.40 \text{ per pound of TSS removed}$$

Where $1.18 is the increased cost for BAT treatment over BPT treatment cost in dollars per kkg of production from Table 18-12, 0.22 kg/kkg is proposed for the BPT suspended solids limitation from Table 18-15, and 0.18 kg/kkg is achievable by use of BAT technology applied to suspended solids removal for Table 18-16.

In the Hydrofluoric Acid Subcategory, the cost for removal of additional conventional pollutants is $0.37 per pound. Thus, a BCT regulation is established because the cost for removal of additional conventional pollutants is less than the $1.15 per pound cost for removal of conventional pollutants from a publically owned treatment works. The calculation is as follows:

$$\frac{\$2.42\ (kg/2.2\ lb.)}{(5.3\ kg/kkg - 2.3\ kg/kkg)} = \$0.37 \text{ per pound of TSS removed}$$

Where $2.42 is the increased cost for BAT treatment over BPT treatment cost in dollars per kkg of production from Table 12-15, where 5.3 kg/kkg is proposed for the BPT total suspended solids limitation from Table 12-24, where 2.3 kg/kkg is reduction of TSS achievable by application of filtration to the waste waters. Because additional removal of conventional pollutants passes the cost test, the regulation for BCT for TSS is set at 2.3 kg/kkg as a 30-day maximum average and using a variability factor ratio (VFR) of 2.1 to establish a daily maximum of 4.8 kg/kkg.

In the diaphragm cell segment of the Chlor-Alkali Subcategory, the cost for removal of additional conventional pollutants is $1.09 per pound. This is less than the $1.15 per pound cost of conventional pollutant removal in a publically owned treatment works. This determination was made by estimating the BAT cost (Table 11-33) of a 30 percent reduction in the BPT maximum 30-day average TSS effluent loading (Table 11-36) as follows:

$$\frac{(\$0.36/kkg)(kg/2.2\ lb.)}{0.51\ kg/kkg - (1.00 - 0.30)(0.51\ kg/kkg)} = \$1.09/lb.$$

Thus, on the basis of adding dual media filtration to the BPT treatment, the Agency is proposing a BCT regulation of TSS. The proposed maximum 30-day average effluent limitation is:

$$(1.00 - 0.30)(0.51 \text{ kg/kkg}) = 0.36 \text{ kg/kkg}$$

and the proposed daily maximum is obtained by applying the variability factor ratio (VFR) value of 2.0 as follows:

$$(2.0)(0.36 \text{ kg/kkg}) = 0.72 \text{ kg/kkg}$$

In the remaining subcategories, BPT is proposed equal to BAT which automatically makes BCT equal to BPT.

3.3.4 New Source Performance Standards

The basis for new source performance standards (NSPS) under Section 306 of the Act is the best available demonstrated technology. New plants have the opportunity to design the best and most efficient inorganic chemicals manufacturing processes and waste water treatment technologies, and Congress therefore directed EPA to consider the best demonstrated process changes, in-plant controls, and end-of-pipe treatment technologies which reduce pollution to the maximum extent feasible.

3.3.5 Pretreatment Standards for Existing Sources

Section 307(b) of the Act requires EPA to promulgate pretreatment standards for existing sources (PSES) which must be achieved within three years of promulgation. PSES are designed to prevent the discharge of pollutants which pass through, interfere with, or are otherwise incompatible with the operation of POTWs. The Clean Water Act of 1977 adds a new dimension by requiring pretreatment for pollutants, such as heavy metals, that limit POTW sludge management alternatives, including the beneficial use of sludges on agricultural lands. The legislative history of the 1977 Act indicates that pretreatment standards are to be technology-based, analogous to the best available technology for removal of toxic pollutants. The general pretreatment regulations which served as the framework for these proposed pretreatment regulations can be found at 40 CFR Part 403, 43 FR 27736 (June 26, 1978). In some instances PSES regulations have been established for subcategories not presently discharging to a POTW. This establishes regulation for plants that may choose to change their discharge to a POTW.

3.3.6 Pretreatment Standards for New Sources

Section 307(c) of the Act requires EPA to promulgate pretreatment standards for new sources (PSNS) at the same time that it promulgates NSPS. New indirect dischargers, like new

direct dischargers, have the opportunity to incorporate the best available demonstrated technologies including process changes, in-plant controls, and end-of-pipe treatment technologies, and to use plant site selection to ensure adequate treatment system installation.

Intentionally Blank Page

SECTION 4

SUBCATEGORIZATION REVIEW

4.1 BASIS FOR SUBCATEGORIZATION

4.1.1 Factors Considered

The inorganic chemicals industry is very large and diversified and has been segmented into subcategories for the purpose of establishing effluent guidelines. Factors taken into consideration for subcategorization include: raw materials used, product produced, manufacturing process employed, geographical location, size and age of equipment and facility involved, nonwater quality aspects of waste characteristics, water pollution control technology, treatment costs, energy requirements and solid waste disposal. Following is a discussion of each of the general factors considered for this industry.

Raw Materials

Different raw materials are used to manufacture a wide variety of products, and vary from raw brines and ores to pure reagent chemicals. Some proceses use waste or by-product streams from other plants or from other processes within the same plant.

Because of this diversification, raw material characteristics generally do not constitute a logical basis for subcategorization. Variations in raw material quality or purity are not normally sufficient to cause a great difference in waste water treatment needs, except in the case of trace toxic materials which may occur in some sources but not in others.

Dominant Product

Subcategorization by chemical name of the dominant inorganic chemical produced involves the least ambiguity in applying standards to a given point source. This is critical because of the great variety of product mix,

manufacturing processes, waste water constituents, and other factors at existing plants. Subcategorization by product becomes less useful as product mix increases in complexity because multi-product waste water also becomes more complex and less susceptible to simple uniform treatment.

A subcategory established on the basis of product manufactured might have two or more different processes but, in the majority of cases, the characteristic of the waste waters is similar and the same treatment technology can be applied for different process waste waters. If two or more dissimilar processes produce waste water of different quality, and different treatment technologies have to be used, then the subcategory has to be further classified or segmented, for example, the Chlor-alkali Industry.

Manufacturing Process

Typically, inorganic chemicals are manufactured for captive or merchant use in four or more steps starting from raw material to final product. Two or more different products might use the same process but then the raw materials used, process sequence, control, recycle potential, handling, and quality control will vary, producing wastes of different quality. Primary subcategorization, therefore, by process is unlikely to be useful. However, secondary subcategorization by process has been necessary in some cases.

Geographical Location

Inorganic chemical plants exist in all parts of the United States but subcategorization on this basis is not appropriate. Geographical location is important in analyzing the feasibility of various treatment alternatives. Evaporation ponds are functional only in areas where evaporation exceeds rainfall. Ocean dumping and deep well disposal are possible only in certain areas, and must be consistent with local, State and Federal laws. Theppossibility of ground water contamination may preclude the use of unlined holding and settling ponds in many locations.

In the northern regions, climatic conditions may necessitate the inclusion of special provisions to prevent freezing of treatment system components, particularly biological oxidation units, clarifiers, ponds, and open collection systems. The costs of utilizing waste heat sources from the process or providing various types of thermal protection, such as insulation or burial of pipes and tanks and building structural shelters, may add considerably to the capital and O & M cost associated with a treatment technology.

Thus, the influence of geography, climate, geology, etc. is reflected in waste treatment modifications and is primarily manifested in the cost of treatment. This, of itself, is not a good basis for subcategorization.

Plant Size

Plant size and production capacity were not found to affect the characteristics of the waste produced. Although plant size can affect treatment cost, this variability can be expressed graphically or mathematically without the need for further segmentation of the category.

Plant Age

Plant age can have an important bearing on waste water volume and quality and is, therefore, a significant factor to consider in evaluating the applicability of treatment technologies and assessing the relative costs of treatment for plants of widely differing age producing the same or similar products. A particular problem with older plants is that their present patterns of water use may have evolved over a long period of time with little consideration for the principles of efficient waste segregation, collection, and treatment. To a limited degree, plant modernization can correct or at least mitigate some of these shortcomings in older facilities, however, only a small proportion of the cost of revamping collection systems or of converting from contact to noncontact cooling systems can be offset by the resulting lower cost of treatment. In general, older plants, even after considerable modernization, normally have a higher volume of waste water flow and higher waste loadings (although pollutant concentrations may be lower due to poor segregation from noncontact sources) in comparison to relatively new plants. The present and forthcoming requirements for pollution control may impose a severe treatment cost penalty on older plants due to the need for backfitting and replumbing of outdated collection systems. Land availability and land use restrictions are also factors which may translate into higher treatment costs for older facilities which find themselves surrounded by highly developed industrial and residential areas.

Unfortunately, plant age does not readily lend itself to an unambiguous definition where a series of plant modifications has taken place. The extent of modifications also varies greatly among plants within the same product industry. For those plants that have been enlarged or modified from their original status, plant age is not unambiguously calculable and therefore not a reasonable basis for subcategorization.

Nonwater Quality Characteristics

Airborne emissions from manufacturing operations can be kept within air quality control limits through the use of cyclones, wet scrubbers and other methods. The nature of the air pollution is related to the products(s) manufactured and/or the raw material used. Since both of these elements vary widely within the inorganic chemicals industry, there is no logic in subcategorization on the basis of nonwater quality characteristics.

Treatment Cost

From a technical viewpoint, subcategorization by common technological requirements for treatment processes could provide a logical basis for selecting one or more unit processes to accomplish the same treatment function, regardless of the source of the waste water. For example, residuals of dissolved heavy metals will respond to lime precipitation and sedimentation at high pH without respect to the specific origin of the metals. This "building block" concept could conceivably result in selecting various combinations of unit processes to meet the treatment requirements. However, if the treatment cost must be expressed in terms of dollars per unit production, this method of subcategorization crosses product lines and interferes with comparison of treatment costs based on the production of a specific chemical. Even if the unit operation is commonly applicable for treating waste flows of different products, the cost of treatment will fluctuate because of variations in quality, loading and flow rates and subcategorization on the basis of treatment cost is not recommended.

Energy Cost

Manufacturing processes in the Inorganic Chemicals Industry typically have large energy requirements. In contrast, waste water treatment processes consume a small fraction of the total energy used. There appears to be no major energy requirements for the waste water treatment facility and subcategorization on the basis of energy cost is not justified.

Solid Waste

Not all inorganic manufacturing processes produce solid wastes. Solid waste producers practice various disposal methods, such as on-site landfills, contract hauling to approved dump sites or incineration. Solid waste disposal becomes very site specific and exhibits a wide range

of costs. Because of the lack of uniformity within the industry, solid waste generation and disposal practices are not a staisfactory basis for subcategorization.

4.1.2 General Conclusions

If effluent limitations are to be tied to units of production, only one method of primary subcategorization is broadly applicable to the inorganic chemicals point source category; viz., subdivision by dominant product. However, there are three subcategories, Chlor-Alkali, Titanium Dioxide, and Hydrogen Cyanide which require further subdivision based on the difference in the quantity and quality of the waste water from the processes, and two others, Hydrofluoric Acid and Aluminum Fluoride, have been reviewed for possible integration (see Section 4.3).

4.2 SECONDARY SUBCATEGORIZATION

4.2.1 Chlor-Alkali

Mercury and diaphragm cells are the two distinct types of electrolytic cells that are used in the production of chlorine and caustic soda. Major process differences between mercury cell and diaphragm cell plants produce corresponding differences in the volume and nature of waste water generated. A principal difference is the presence of mercury as a contaminant in the waste waters from the mercury cell process and asbestos in the diaphragm cell plant wastes. The TSS discharges from diaphragm cell plants are generally larger than from mercury cell plants, due to the higher volumes of contact and noncontact water used. Also, in diaphragm cells a large amount of water is used and an appreciable quantity of waste water is produced in the caustic evaporation process. Such water is not produced in mercury cell plants. The quantity of waste water generated from the diaphragm cell plants is almost double that of the mercury cell plants for the same chlorine production capacity. Based on the quantity and characteristics of the waste water, further subcategorization is justified.

4.2.2 Titanium Dioxide

Two major ores, rutile and ilmenite, are used for the manufacture of titanium dioxide. The ilmenite ore contains 40-70 percent titanium dioxide (TiO_2), up to 35 percent ferrous oxide (FeO), and 25 percent ferric oxide (Fe_2O_3). Rutile ore contains more than 90 percent TiO_2. Two processing techniques, the sulfate process and the chloride process, are used to extract titanium dioxide from the ores.

The sulfate process uses ilmenite ore and sulfuric acid as raw materials. The chloride process uses rutile ores and chlorine. The high grade rutile ore is expensive and its availability is declining. In recent years, new technological advances have alleviated the raw material shortage problem. By upgrading the ilmenite ore quality, the chloride process can be used to produce titanium dioxide of high purity. Because of the difference in quality and quantity of waste waters generated from the sulfate and chloride processes using the two different ores, the titanium dioxide industry may be further subdivided into three segments as follows:

a. Sulfate process

b. Chloride process using rutile ore

c. Chloride process using ilmenite ore (one step).

The sulfate process generates large amounts of strong and weak sulfuric acid water-borne wastes. Application of pollution control technology to the acid wastes generates about five times as much gypsum as product. The chloride process generates large amounts of dissolved metal chlorides and the treatment technology is expensive. Solid waste from both processes present difficult disposal problems. These solids include ferrous sulfate ($FeSO_4$) and a hydrated by-product from the sulfate process and heavy metal sludges from the chloride process. Ilmenite ore has to be upgraded before it is used to extract titanium dioxide by the chloride process, and this beneficiation process step generates additional wastes.

The application of the chloride process to ilmenite ore may proceed in either one or two steps. A patented one-step process accomplishes both beneficiation and chlorination of the ore in a single fluidized bed reactor and generates raw waste loadings which are similar to those from the sulfate process in terms of acidity and metals, and similar to wastes from the chloride-rutile process in terms of spent coke solids and still residues. In the two-step process, ore beneficiation resulting in either a synthetic rutile or an enriched titanium oxide slag is carried out separately at the mine or the plant. The discharge of waste water generated by the beneficiation step would be regulated under the Ore Mining and Dressing Point Source Category and will not be considered in this document. The second step of the two-step process generates wastes that are very similar in quantity and quality to those from the chloride-rutile process and will be governed by the discharge regulations for that segment of the TiO_2 subcategory.

Therefore, further subclassification based on the amount and characteristics of the waste water appears to be justified, and the three process subdivisions indicated above are appropriate for this purpose.

4.2.3 Hydrogen Cyanide

Hydrogen cyanide (HCN) is made from two different processes, the Andrussow process and as a by-product of acrylonitrile manufacture. In the Andrussow process, air, ammonia, and natural gas are reacted to produce the dominant product hydrogen cyanide.

Water-borne wastes from the process consist principally of ammonia and sulfates in addition to cyanide and nitriles.

The primary product in the other process is acrylonitrile ($CH_2 = CHCN$) and the hydrogen cyanide is a by-product. Because the hydrogen cyanide is a by-product it will be covered in the organic chemicals manufacturing category with the primary product.

4.3 REVIEW OF POSSIBLE INTEGRATION OF SUBCATEGORIES

4.3.1 Hydrofluoric Acid and Aluminum Fluoride

Aluminum fluoride (AlF_3) usually is produced by the reaction of hydrated alumina ($Al_2O_3.3H_2O$) with hydrogen fluoride (HF), although one plant produces aluminum fluoride from fluorosilicic acid (H_2SiF_6), a by-product of phosphoric acid (H_3PO_4). With one exception, all the aluminum fluoride plants are integrated with hydrogen fluoride (or hydrofluoric acid) production.

The two major uses of hydrogen fluoride are in the fluorocarbon industry and as raw material in the manufacture of aluminum fluoride. A ban on the fluorocarbon propellants has curtailed the use of hydrogen fluoride in that industry and it was completely stopped in 1978. The selling of hydrogen fluoride in the merchant market has declined and the primary use is limited to the production of aluminum fluoride and fluorocarbon plastics until some other major use is found.

For both products (HF and AlF_3), process waste waters are generated by the various gas scrubbers and by leaks and spills. In both cases, air pollution control scrubber effluents contain mainly fluoride, acidity and sulfate. The fluoride is present as the free ion as well as various complex

fluoro anions. Calcium fluoride (CaF_2), generated as a solid waste, is a disposal problem for both the subcategories because of its moderate toxicity. Only one additional solid waste, gypsum ($CaSO_4.2H_2O$), is generated from the hydrogen fluoride manufacture alone, and it can be treated and handled independently.

Combining hydrofluoric acid and aluminum fluoride into a single subcategory does not appear to offer any regulatory advantages when the two products are manufactured at the same plant location. The waste waters associated with the two products are similar and a common treatment facility is normally utilized. In addition, the combined manufacture of these products does not create a unique or unusual situation, either with regard to the waste water treatment requirements or compliance with discharge regulations. Although the waste gypsum produced at an HF plant supplies enough calcium for adequate fluoride removal from neutralized scrubber waste waters generated by both HF and AlF_3 production, the applied treatment technology is essentially the same as that applied by manufacturers of either product alone. However, the effluent water quality and the toxic pollutant loadings would not be expected to be the same. Further, the opportunities for drip acid recycle (or the hydrolysis of complex fluorides prior to treatment) and scrubber water recycle are a function of plant design and age, rather than product mix.

In view of these considerations, a recommendation for the creation of an HF/AlF_3 combined product subcategory is not being made at this time.

4.4 SUMMARY

The recommended subcategorization with process subdivisions include the following:

Subcategory	Process Subdivisions
Chlor-Alkali	Mercury Cell
	Diaphragm Cell
Titanium Dioxide	Sulfate
	Chloride-Rutile
	Chloride-Ilmenite
Hydrogen Cyanide	Andrussow Process
	Acrylonitrile By-Product

SECTION 5

SCREENING AND VERIFICATION SAMPLING PROGRAMS

5.1 SCOPE AND METHODOLOGY

The specific objective of the sampling programs was to establish the extent of the required regulation of toxic pollutant discharges in the inorganic chemicals industry in terms of factual information derived from the chemical analysis and flow measurement of representative process raw waste water streams and treated effluents. Prior to this study, most of the information available on toxic pollutants has been concerned with a relatively small number of known process-related substances contaminating a variety of direct and indirect contact process waters discharged from a production facility. There had been no previous requirement for a comprehensive survey of waste water chemistry addressing the possibility that a large number of other potentially toxic substances could be present, albeit at extremely low concentrations.

The screening phase of the sampling program was designed to ascertain the presence in each subcategory of any of the 129 listed toxic pollutants at raw waste concentrations or daily loadings which, if untreated, could be environmentally significiant. Screening is based on the sampling of one or more typical manufacturing operations in each subcategory. Where significant pollutant concentrations were found, additional plants were sampled during the verification phase for confirmation and further quantification of data on the particular toxic pollutants in question. A goal was set for screening and verification sampling of a sufficient number of plants to account for at least 75 percent of the total U.S. production, in each subcategory having significant concentrations of priority pollutants.

A detailed description of the screening and verification programs is presented in the paragraphs below.

5.1.1 Selecting Plants and Making Preliminary Contacts

In each subcategory, plants were selected for screening on the basis of the following general criteria:

1. Minimal product mix and no organic product lines which could increase the potential for interprocess cross contamination of waste waters.

2. Presence of a physical chemical treatment facility rather than a biological one, or no treatment system. (Biological systems are neither widely used nor generally applicable in the inorganic chemicals industries.)

3. Manufacture of industrial grade products in volume, rather than low volume reagent grade products.

4. Median production capacity within the subcategory.

5. Segregated waste streams to facilitate sampling.

6. NPDES discharges rather than POTW discharges, since treatment for a NPDES discharge is usually more extensive.

7. Geographical clustering of selected plants to facilitate field logistics, but only extent that other factors are equal.

Preliminary phone contacts were made with plant representatives of those facilities which satisfied the above criteria. If requested, a letter was written to describe the objectives of the sampling program and to cite the legal authority of the Agency and its sampling contractor under Section 308 of the Federal Water Pollution Control Act Amendments of 1972. Secrecy agreements, when required, were executed at this time for the protection of any company proprietary information disclosed to the sampling contractor.

Prior to the actual sampling of waste streams, a lead visit to the selected plant was made to gather background information, confirm and update any 308 Questionaire responses, and to obtain additional technical information regarding processes and waste treatment practices. Sampling sites were selected and described relative to a detailed waste source inventory and a flow diagram of the process and waste treatment system. Arrangements were made for the subsequent sampling visit and the details of the lead visit and sampling point descriptions were documented in an interim report to the Agency.

5.1.2 Screening and Verification Sampling

Collection of Samples for Screening

In the screening phase of the sampling program, the specific objective was the detection and quantification of water-borne waste constituents included on the list of 129 toxic pollutants (Table 3-1). Each sample of an individual raw waste stream, a combined waste stream, or a treated effluent was collected where possible by an automatic, time series, compositor over a single 72-hour sampling period. Where automatic compositing was not possible, grab samples were taken at intervals during the same sampling period and composited manually.

Each sample was divided into several portions and preserved, as required for different types of analysis, in accordance with the procedure established by EPA (4) for the measurement of toxic pollutants.

Samples were also taken from the composites, or as individual grabs, for the analysis of the conventional and nonconventional pollutants.

Collection of Samples for Verification

The objective of verification sampling was to confirm the first observations from screening and further quantify the concentrations and waste loadings of the toxic pollutants and conventional and nonconventional pollutants. Where any toxic pollutant metals were found during screening sampling of a particular plant, analyses were made for all toxic pollutant metals during the verification sampling.

The established protocol for verification sampling required the collection of three 24-hour composites at each sampling point. Again, where composites could not be taken with automatic samplers, grab samples were taken periodically over the same time period and composited manually.

Sample Shipping

All samples, individually labeled, were placed in large plastic bags, which were then placed in a waterproof insulated shipping container. Enough ice was included to maintain a temperature of approximately 4 degrees C. during shipment to the laboratory.

Containers were shipped by the best available route, usually air freight, usually arriving at the laboratory on the same day, but occasionally taking overnight. Upon receipt, all samples were immediately placed in a walk-in refrigerator maintained at 4 degrees C.

In order to maintain the chain of custody and to keep track of samples, sampling personnel kept logs of samples taken in ink in page numbered hard-bound books. The data recorded included: date, time, plant code, number, sample type, and sampler. This information was also included on the label of individual samples. Prior to their arrival at the laboratory, a list of samples shipped, including number, type of samples, and analysis to be performed, was sent to each department supervisor to alert him of incoming work.

A master analytical control chart was maintained which included: date sample was received, date due, number and type of each sample, and the analysis required.

At the time of analysis, the individual samples were distributed to the analytical chemists along with a list which included: I.D. number of sample, type of sample, analysis required, date samples received, and due dates.

Upon completion of analysis, the sample was sent back to the refrigerator and placed in identified bins. All samples were kept in the refrigerator at 4 degrees C. when not being analyzed. A list of completed samples was then sent to the EPA Sample Control Center.

Verification Sampling Plant Selection

After the decision was made to verify the presence of toxic pollutants found in the screening of a subcategory, verification plants were selected. The basis for selection was essentially the same as that used in selecting screening plants.

The screening program results were evaluated to identify those toxic pollutants that were present at significant concentration or significant daily loadings. Concentrations or loadings which could be reduced by the highest quality treatment systems were considered significant. Two situations occurred:

1. A subcategory which had a significant raw waste concentration of any toxic pollutant would be subject to verification sampling, and BAT-based regulations would likely be proposed by the Agency for the treatment and control of that toxic pollutant.

2. A subcategory which had no significant raw waste concentration of any toxic pollutant would not be subject to verification sampling and would likely be excluded from regulatory coverage at this time in accordance with the provisions for exclusion under Paragraph 8 of the Settlement Agreement.

In analyzing screening data, only those pollutants attributable to process sources were considered. Pollutants which result from cooling tower operations, corrosion or corrosion control, control of biological growth, or any other operation not directly tied to the production process were not used as a basis for verification.

The number of plants selected for verification in each subcategory was roughly proportional to the number of existing plants in that subcategory with a maximum of five plants selected. In small subcategories (relatively few production facilities), an effort was made to select a sufficient number of plants to account for the majority of the total U.S. Production.

When the verification phase of the program was initiated, an important decision was made with regard to metals analysis. First, in view of the frequent presence of metal contamination in the wastes screened, and the inability in some cases to show a direct relationship between certain metals found and the known process chemicals or the materials of construction, it was decided that all 13 of the toxic metals should be determined again during verification, regardless of whether they were found in screening. This was intended to provide a much more complete data base than would be obtained by running verification analyses for only those metals found in screening to exceed the verification criteria levels at the time of sampling.

5.1.3 Analytical Methodology for Toxic Pollutants

The analytical protocol for the screening and verification of toxic pollutants was established in Sampling and Analysis Procedures for Priority Pollutants by U.S. Environmental Protection Agency, Environmental Monitoring and Support Laboratory, Cincinnati, Ohio, April 1977.

The specified analytical methodologies were employed without modification except where noted below in connection with toxic metals analysis during verification.

Implementation of the methodology and quality assurance provisions required the establishment of special sample handling and control procedures specifically suited to each type of analysis. These procedures, together with a discussion of the achievable detection limits for each parameter or group of similar parameters are presented in the following paragraphs.

Trace Metal Analysis

Figure 5-1 shows a data flow diagram for metals analysis. Atomic absorption methods described in 40 CFR 136 per Section 304(h) were used. A set procedure was followed in the laboratory to generate the analytical values and the quality control data. The data flow diagram shows the actual sequence employed in verification analysis and the following notes, which are keyed to the diagram, provide additional information on the procedures:

1. Blanks -- two for each set of analyses digested.
   Duplicates -- one every seventh sample.

2. Quality Control at Operator Level (Atomic Absorption):

   Blanks -- These were run at the beginning and the end of every set analyzed for each metal. Also, air blanks were run on furnace, or heated graphite atomizer, (HGA), after any sample with a large positive value.

   Standards -- Three different concentrations were run at the beginning and end of every set analyzed for each metal. Standards were also run every tenth sample during the analysis of a set.

   Spikes -- These were run every seventh sample, and were made by taking a mixture of equal parts of a sample and standard and comparing the resulting absorbance with individual sample and standard absorbances.

   Duplicates -- For furnace analysis, the sample was run twice when the absorbance was low to identify errors. The average of the two values was used as the determinate value.

3. UTD = "Unable To Determine" due to matrix interferences.

4. Criteria Employed in Spike Selection:

   a. Samples were chosen to be spiked based upon the following criteria:

      -- those which were not subject to interference effects.

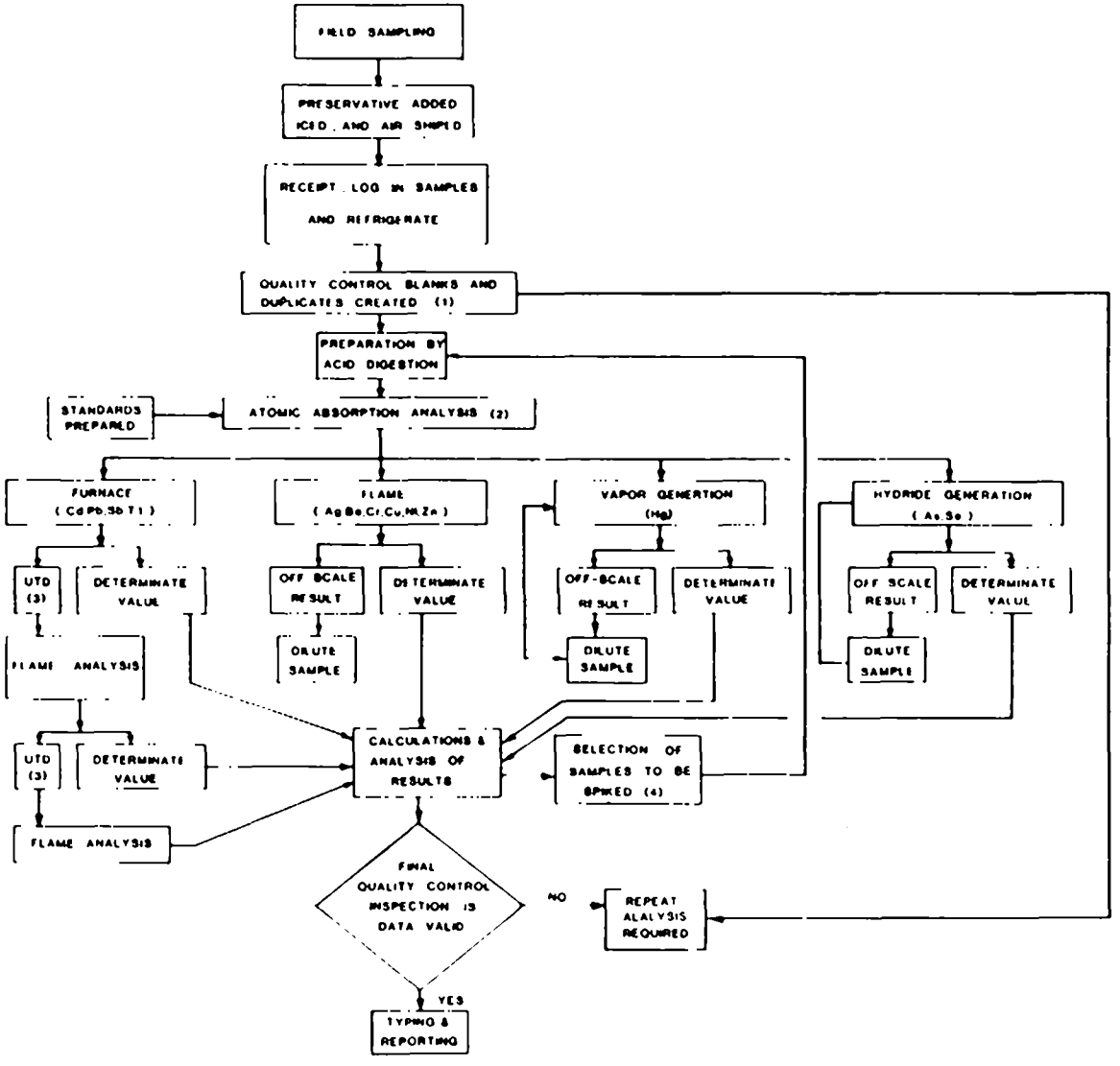

Figure 5-1. Sample flow sheet for metal analysis.

-- those that had a measurable concentration of the metal being determined.
-- those whose concentration was in the linear range of the instrument.
-- approximately every seventh sample.

b. The level of spike chosen was controlled by the following factors:

-- it should be approximately 40-60 percent of the determinate value.
-- the determinate value absorbance + spike absorbance must give total absorbance that was within the linear range.

c. A reagent blank was run with each set of spiked samples prepared.

During the screening phase of the sampling program, the standard protocol followed for metals analysis was:

1. Twelve elements were determined by AA spectrophotometry in the furnace (HGA) mode.

2. If subject to matrix interference (UTD), they were then determined in the flame mode.

3. Mercury was determined by the standard cold vapor method.

Certain changes in analytical protocol were instituted during verification analysis in order to avoid the excessive matrix interference experienced during screening when the heated graphite atomizer (HGA) was the primary method applied to the analysis of 12 of the metals. The modified protocol for metals was:

1. Six elements were determined by flame only, namely, Ag, Be, Cu, Cr, Ni and Zn.

2. Four elements were determined by furnace (HGA), namely, Cd, Pb, Tl and Sb. If interference occurred, Cd, Pb, Tl and Sb were determined by flame.

3. Hg was still analyzed by the cold vapor method.

This modification reduced the number of preparations per sample from three to two and achieved adequate detection limits which were still well below the verification criteria levels.

Additional modifications were made during the verification program to improve the reproducibility and precision for Hg, As and Se. These were:

1. The cold vapor procedure for Hg was modified to eliminate the pump and allow dilution and rerun from the same sample. This saved time and increased reproducibility.

2. Selenium and arsenic were determined by hydride generation using sodium borohydride ($NaBH_4$). This greatly minimized problems associated with matrix interference. The method is very reproducible and the detection limits were at levels well below the verification criteria for these two elements.

After the above modifications were adopted, screening samples which originally were unable to be analyzed, or which were recorded as below excessively high detection limits due to the effects of matrix interferences, were rerun. Satisfactory results were then obtained in nearly all cases due to the greatly improved sensitivity and reproducibility.

It should be noted that these modifications of the analytical protocol were in the direction of improved precision and reproducibility and not towards lower detection limits. The original screening procedures generally had a lower detection limit when it was achievable. However, the methods were too susceptible to giving no result at all with complex industrial matrices, and so the revised protocols sacrificed some sensitivity for precision and reproducibility. The final detection limits were still below levels that would be regarded as significant.

Table 5-1 presents a summary of the analytical detection limits for each of the 13 toxic metals using the original protocol and the two subsequent modifications which were applied.

Organic Compound Analysis

The organic toxic pollutants were determined by the standard protocol (40 CFR 136 proposed December 3, 1979) which includes sample preparation, extraction, and analytical methodologies. Extractions were carried out using methylene chloride in the case of the acid and base/neutral organic fractions and with hexane/methylene chloride to obtain the pesticide-containing fractions. The acid and base/neutral fractions were reduced in volume and analyzed by gas chromatography-mass spectrometry (GC/MS). The pesticides were analyzed by electron capture gas chromatography followed by

TABLE 5-1. ANALYTICAL DETECTION LIMITS FOR METALS[1]

Element	Original Screening Protocol[2]		First Modification of Protocol[3]		Second Modification of Protocol[4]	
	Method	(µg/l)	Method	(µg/l)	Method	(µg/l)
Antimony, Sb	HGA*	10	HGA	10	HGA	10
Arsenic, As	HGA	3	HGA	3	Hydride	10
Beryllium, Be	HGA	0.2	Flame	15	Flame	15
Cadmium, Cd	HGA	1	HGA	1	HGA	1
Chromium, Cr	HGA	1	Flame	25	Flame	25
Copper, Cu	HGA	1	Flame	20	Flame	20
Lead, Pb	HGA	10	HGA	10	HGA	10
Mercury, Hg	Cold Vapor	0.5	Cold Vapor	0.5	New Cold Vapor	0.5
Nickel, Ni	HGA	1	Flame	25	Flame	25
Selenium, Se	HGA	9	HGA	9	Hydride	10
Silver, Ag	HGA	0.5	Flame	15	Flame	15
Thallium, Tl	HGA	2	HGA	2	HGA	2
Zinc, Zn	HGA	1	Flame	25	Flame	1

* Heated Graphite Atomizer

(1) Assuming no matrix interferences requiring dilution of sample.

(2) EPA Contract No. 68-01-4492 (September 29, 1977), Exhibit C, "Protocol for the Measurement of Toxic Substances", Environmental Monitoring and Support Laboratory, Cincinnati, Ohio

(3) June, 1978

(4) August, 1978

GC/MS confirmation of positive results. Volatile organics were analyzed by the purge and trap method of introducing the material into the GC/MS inlet system.

Cyanide Analysis

The standard methods for the wet chemical analysis of total cyanide and cyanide amenable to chlorination (Cyanide, A). were utilized (40 CRF 136) Cyanide analysis is subject to several sources of interference including:

Metals - The presence of Fe, Cd, Ca, Ni, Ag, and Zn may cause low results due to the formation of stable complexes with cyanide. The iron complexes may form insoluble precipitates which are particularly difficult to break up both at the time of alkaline chlorination of the sampled waste water and during the chemical analysis for cyanide.

Oxidizing agents - The presence of free chlorine in the waste water sample will destroy cyanide and cause low analytical results. The addition of ascorbic acid to destroy chlorine at the time of sampling is intended to mitigate this problem. Other oxidizing agents such as peroxides and chromates may also react with cyanides over a period of time and cause low results.

Sulfides - Sulfide or bisulfide will interfere in the analysis of cyanide by reacting with the colorometric reagents.

The presence of sulfur dioxide or bisulfite in the waste water sample should have no appreciable effect on cyanide results. Detection limits on the order of 1-4 ug/l can be achieved by the analytical method employed, but the results have to be interpreted with regard to the possible interfering components of the sample.

Hexavalent Chromium (Cr VI) Analysis

The determination of Cr VI in waste water samples is also subject to a number of interferences which can take effect either during sampling and storage or during analysis.

Acids - Samples taken and held at a very low pH can experience the conversion of other forms of chromium into Cr VI causing a positive interference.

Reducing agents - Samples containing sulfur dioxide, bisulfite, bisulfide, sulfide, ferrous iron, and other reducing agents will result in low values of Cr VI by converting it to trivalent chromium (Cr III). Under these conditions the chromates originally present would be included in the total chromium determination but the analytical results for hexavalent chromium would be proportionately low. (See Reference 52.)

The detection limits for Cr VI using the diphenylcarbazide colorometric method are on the order of 1-3 ug/l in the absence of substances which interfere with color development.

Asbestos Fiber Analysis

The analysis of selected samples for asbestos fiber (chrysotile) was conducted by the recommended method utilizing transmission electron microscopy with selected area electron diffraction as described by Dr. Charles Anderson (EPA, Athens, Georgia) at the Analytical Protocol Meeting in Denver (November, 1977) (56).

Conventional and Nonconventional Pollutants

All techniques used for the analysis of BPT control parameters (conventional and nonconventional pollutants) were those recommended by the Agency. The list of approved test procedures was published in the Federal Register on October 16, 1973 (38 FR 28758) and may be also found in Title 40 of the Code of Federal Regulations (40 CFR 136).

5.1.4 Quality Assurance Provisions

The Agency and the contractor's analytical laboratories maintain consistently high standards for accuracy and quality control. As an in-house requirement, a minium of ten percent of all samples are routinely run in duplicate. Quantitation is based on standards that are prepared in the same matrix as the samples. The standards are also checked by participation in the EPA Reference Sample Program that utilizes a double blind technique. (EMSL, Cincinnati, Ohio, Office of Research and Development.)

Additionally, outside laboratories are retained for checks on quality by analyzing split samples and running submitted standards. Accuracy is also insured by analysis of a minimum of fifteen percent of all samples with spikes by the method of standard additions. The spikes are added prior to sample preparation and are carried through the entire sample analysis procedure.

The contractor's laboratories have consistently maintained the standards for laboratory certification which are imposed by the State of California. Certification is dependent upon the accurate performance of routine analyses on check samples submitted by the State, as well as on-site inspections by the State of California's Sanitation and Radiation Laboratory, Department of Fish and Game, and the U. S. Environmental Protection Agency, NEIC, Denver, Colorado.

The quality assurance provisions outlined in the EPA Protocol for GC/MS Analysis of Toxic Pollutants are rigorously adhered to with one added precaution, namely, the use of internal standards as a means of measuring recovery. Although not required by the protocol for pesticide analysis, this technique is utilized as an in-house quality control requirement to insure the accuracy of results in this analysis.

The high sensitivity of instrumentation used in trace organic chemical analysis dictates that contamination of the samples from any possible source must be diligently guarded against. Accordingly, only glass sample containers with Teflon-lined lids were used and these were subjected to a three step cleaning procedure prior to use, even though only new liners and glass containers were used. All glassware used for sample preparation and analysis was subjected to a dual cleaning system.

The sample extraction and preparation rooms are dedicated solely to toxic pollutant analysis, and have their own ventilation systems that are isolated from the other sample preparation and receipt areas of the laboratories.

A documented system of existing practices, including calibrations and operational checks is maintained to assure uniformity of performance and to serve as a basis for alteration of standardization intervals. A chemist is assigned full time to maintain this system, assure strict record formating and controls, and to direct the quality control program of the laboratories. The primary vehicle of this system is the quality assurance manual containing the detailed procedures used in sample preparation and analysis, and the complete records of all quality control standards, blanks, spikes and duplicates.

5.2 SUMMARY OF ANALYTICAL RESULTS

The results obtained during the screening and verification sampling program are summarized in Table 5-2 and Table 5-3. These tables show the frequency and distribution of the pollutants according to selected plant groupings, concentration ranges, and subcategories in which the pollutants occur.

Pollutant frequencies as shown in columns 5, 6, 7, and 8 of Table 5-2 are based on the highest individual pollutant concentration found for each plant's raw waste during the screening and verification sampling program.

The toxic pollutant asbestos has not been included in either of the two tables mentioned above. Asbestos

TABLE 5-2. POLLUTANT FREQUENCY BASED ON SAMPLING PROGRAM RESULTS INCLUDING RAW WASTE

Pollutants Detected	Pollutant Occurrence Based on Plant Grouping			Pollutant Occurrence Based on Concentration Classification (µg/l)			
	5 or <5 Plants	>5 but ≤10 Plants	>10 Plants	≤50	>50 but ≤500	>500 but ≤2,500	>2,500
Antimony			X	28	19	4	1
Arsenic			X	38	12	3	
Beryllium			X	49	4		
Cadmium			X	45	4	4	
Chromium			X	20	13	9	10
Copper			X	21	16	9	7
Cyanide	X						2
Lead			X	25	15	7	6
Mercury			X	46	2		5
Nickel			X	17	20	8	8
Selenium			X	46	7		
Silver			X	45	7	1	
Thallium			X	41	11	1	
Zinc			X	9	18	14	12
Benzene				6	1		
Carbon Tetrachloride				2			
Chlorobenzene				1			
1,2-Dichloroethane				2			
1,1,1-Trichloroethane				4	1		
Hexachloroethane				1			
1,1,2-Trichloroethane				2			
1,1,2,2-Tetrachloroethane	X			3			
Chloroform			X	15	2	1	
1,2-Dichlorobenzene	X			1			
1,1-Dichloroethylene	X			3			
1,2-Dichloropropylene	X				1		
2,6-Dinitrotoluene	X			1			
Ethylbenzene		X		7	1		
Fluoranthene	X			1			
Bis(2-Chloroisopropyl) ether	X			1			
Methylene chloride			X	11	3	1	
Dichlorobromomethane	X			5			
Trichlorofluoromethane	X			2		1	
Chlorodibromomethane	X			2			
Naphthalene	X			1	1		
Nitrophenol	X			1			
Pentachlorophenol	X			2	1	1	1
Phenol	X			2	3		
Bis(2-Ethylhexyl) phthalate	X			20		1	1
Butyl benzyl phthalate	X			3			
Di-n-butyl phthalate			X	15			
Diethyl phthalate	X			5			
Dimethyl phthalate	X			2			
Benzo(a) anthracene	X			1			
Benzo(a) pyrene	X			1			
3,4-Benzofluoroethane	X			1			
Chrysene	X			1			
Anthracene	X			1			
Fluorene	X			1			
Phenanthrene	X			1			
Pyrene	X			1			
Tetrachloroethylene	X			4			
Toluene		X		7		1	
Trichloroethylene	X			3			
Nitrobenzene	X					2	
2,4-Dinitrophenol	X					2	

TABLE 5-3. DISTRIBUTION OF POLLUTANTS ACCORDING TO SUBCATEGORY [1]

Pollutants Detected	Subcategory Numbers Where Pollutants Found
Antimony	All[2] but 7, 23, 27, 28, 33
Arsenic	" " " " " "
Beryllium	" " " " " "
Cadmium	" " " " " "
Chromium	" " " " " "
Copper	" " " " " "
Cyanide	7
Lead	All[2] but 7, 23, 27, 28, 33
Mercury	" " " " " "
Nickel	" " " " " "
Selenium	" " " " " "
Silver	" " " " " "
Thallium	" " " " " "
Zinc	" " " " " "
Benzene	1, 3, 4, 10, 11, 25, 32
Carbon Tetrachloride	1, 2
Chlorobenzene	1, 35
1,2-Dichloroethane	1, 11, 13, 22, 35
1,1,1-Trichloroethane	1
Hexachloroethane	4,11
1,1,2-Trichloroethane	1, 10, 35
1,1,2,2-Tetrachloroethane	1, 3, 4, 10, 13, 15, 19, 21, 22, 25, 32, 35
Chloroform	24
1,2-Dichlorobenzene	1, 11, 13
1,1-Dichloroethylene	26
1,2-Dichloropropylene	1
2,6-Dinitrotoluene	1
Ethylbenzene	1, 3, 4, 9, 11, 21, 25, 32
Fluoranthene	8
Bis(2-Chloroisopropyl) ether	22
Methylene chloride	1, 4, 8, 9, 12, 13, 19, 21, 22, 25,26, 32, 35
Dichlorobromomethane	1, 4, 19, 32
Trichlorofluoromethane	1, 4, 25
Chlorodibromomethane	19, 32
Naphthalene	1, 32
4-Nitrophenol	17
Pentachlorophenol	2, 3, 4, 8, 15
Phenol	2, 15, 26, 31, 32
Bis(2-Ethylhexyl) phthalate	1, 4, 7, 8, 10, 11, 12,13,15,18,24,25,26,30,31,35
Butylbenzyl phthalate	1, 2, 12
Di-n-butyl phthalate	1, 4, 8, 11, 17, 18, 19, 21, 22, 30, 31, 34, 35
Diethyl phthalate	8, 10, 11, 19, 31
Dimethyl phthalate	12, 31
Benzo(a) anthracene	8
Benzo (a) pyrene	8

[1] For name of subcategory, refer to Table 3-2. (Continued)

[2] "All" means subcategory numbers 1 through 35 of Table 3-2.

TABLE 5-3. Continued

Pollutants Detected	Subcategory Numbers Where Pollutants Found
3,4-Benzofluoranthane	8
Chrysene	8
Anthracene	8
Fluorene	8, 12
Phenanthrene	8
Pyrene	8
Tetrachloroethylene	1, 4, 10, 22
Toluene	1, 3, 4, 10, 11, 15, 18, 32
Trichloroethylene	1, 4, 25

concentration is reported in million fibers per liter (MFL) which is not compatible with the concentration units in which the other pollutants have been reported. Asbestos was found in three plants at concentration levels of 2.1E8, 2.0E7, and 9.4E4 MFL, respectively, where E is exponential on base 10. All three plants belong to the Chlor-Alkali subcategory.

Intentionally Blank Page

SECTION 6

PROCESS AND WASTE TREATMENT INFORMATION DEVELOPMENT AND EVALUATION

6.1 INDUSTRY DATA BASE DESCRIPTION

Information and data on the inorganic chemicals industry were obtained from a number of sources. These sources included literature reviews, plant visits, telephone contacts, and industry responses to the Section 308 Questionnaires. The type material gathered from these sources is discussed below.

6.1.1 Literature Review

A review of the literature has been conducted to identify and collect information related to manufacturing processes, raw materials, water use, waste water sources, waste water treatment technology, raw waste characteristics, and economic data. Relevant information from reports, books, papers, conference presentations and periodicals were identified by computer search and are presented in the reference section of this report. This information was incorporated into a broad based assessment of process and technology practices aimed at selecting the best available treatment technology and best demonstrated technology for the various industry subcategories. It also provided the background required for evaluating the subcategorization of the industries.

6.1.2 Plant Visits

During the screening and verification phase of this project, much information was gathered from individual plants relating to production capacity, manufacturing processes, waste flows, water reuse, waste water treatment systems and performance, and best management practices (BMP). The lead visits also provided an opportunity to update and clarify some of the information given in the 308 responses.

6.1.3 Telephone and Direct Contact

Numerous contacts were made with knowledgeable persons in both industry and government to gather and exchange information concerning all phases of this study. These sources are cited in the text as personal communications.

6.1.4 308 Questionnaire Responses

The basis for much of the work in this study is the responses from industrial inorganic chemical firms to the 308 data requests.

Data from 284 manufacturers' responses were utilized by the project team for the development of appropriate guidelines for the inorganic chemicals subcategory. Industrial firms, through their compliance with the needs of the 308 Questionnaire, provided a valuable industry-wide data base used extensively in this analysis.

Essential data elements from each questionnaire were extracted for the purpose of creating a working data base for this report. Specific elements selected for this smaller, more-manageable data base are given in Table 6-1.

These data provided the basis for the subcategory review through a profile of each industry. After compilation of the questionnaire data, industry totals for capacity and production (for the respondents) were available. In addition, derivative quantities such as percent utilization, effluent per ton of product, and conversion to metric units were compiled.

TABLE 6-1. 308 QUSTIONNAIRE RESPONSE DATA
DATA ELEMENTS
INORGANIC CHEMICALS GUIDELINES STUDY

Datum Reference	Description	Comments
Manufacturer	Name	Confidential
	Location	
	EPA Region	
Product	Name	
	Subcategory	Inorganic Chemicals
	Number of other Products	
		Fiscal year
Plant	Capacity	1976
	Production	1976
	Age	1976
Process	Name	
	Volume of Process Effluent	
	Volume of Noncontact Effluent	
Effluent Treatment	Type	
	Permit	
	Major Pollutants	

6.2 PROCESS WASTE SOURCES AND CURRENT TREATMENT PRACTICES

6.2.1 Data Acquisition

The information presented in this section was obtained from a variety of published sources and the available industry responses to the 308 Questionnaires as well as from plant visits and interviews with industry personnel conducted by the Agency and its contractor during the toxic pollutant screening and verification program. The results of visits and interviews are documented in field notebooks, interim plant visit reports, and telephone communication records which are part of the rule making record.

Plant visits were particularly useful for confirming and updating the detailed technical information contained in the 308 Questionnaire responses. The cooperative attitude displayed by industry greatly facilitated the acquisition of reliable operating data and meaningful sampling results.

6.2.2 Evaluation of Data

Each of the various industrial subcategories in which verification sampling was conducted was the subject of an extensive evaluation to provide the technical basis for selecting candidate advanced treatment technologies and developing the related base and incremental cost estimations. In the subsections which follow, individual plant descriptions are presented according to the general format for each subcategory:

General Process Description
- Description of process reactions and unit operations.
- Inventory of raw materials used.
- Typical process flow diagram.

Water Use and Waste Source Inventory
- Description of individual plants visited, sampled and plant information from other sources.
- Inventory of water uses for contact and noncontact purposes.
- Inventory of raw process waste water sources and identification of sampling points.
- Process waste water quality and flow data.
- Solid waste generation and disposal.

Control and Treatment Practices
- Description of specific treatment technologies and operating facilities.
- Description of the total input to the treatment system including sources attributed to other production operations and noncontact water (e.g., cooling water, etc.).

Evaluation of Production and Waste Flow Data
- Tabular summary of plant-specific data.
- Waste flows per unit of production (unit waste flows) with the range and average values.
- Solid waste quantities.
- Treatment chemical requirements.

Process Modifications and Technology Transfer Options

Best Management Practices (BMP)
- Plant area operations and housekeeping.
- Runoff control.
- Solid waste handling (e.g., fugitive dust and leachate control, etc.).

6.2.3 Model Plant and BPT Treatment System Specification

The model plant concept plays a central role in both the development of alternative treatment system designs for priority pollutant removal and for estimating the related internal costs of such treatment in each subcategory. In order to be representative of a subcategory, each set of model plant specifications was composited from a profile data summary derived from the available information on production and waste flow.

Based on the typically achievable waste flow rate per unit of production, the model plant was used as a starting point for an appropriately designed and sized BPT level waste water treatment system. Certain assumptions were made regarding the possible process variations and the specific raw waste sources incorporated into each model. In most cases, it was appropriate to assume that the waste flow per unit of production did not vary over the particular range of production capacities covered. Production rates were selected in most subcategories to represent the small, mid-range and large size plants presently in operation. Small subcategories were represented by single mid-range production rates for the model plants. Cost estimates were developed for each set of base level (BPT) and advanced level (BAT/NSPS) treatment system design specifications.

Beginning with Section 11, the model plant and BPT level treatment system descriptions and specifications for each subcategory include the following information:

Production rates and mode of operation.
Specific process type and waste sources.
Waste flow per unit of production.
Solid waste generation and handling.
Treatment chemical requirements.

If applicable, the new source model plant is also described and the design specifications given for its waste treatment system.

The model plants do not represent exemplary or specific existing plants, but are typical plants of adequate design derived from the range of plants and treatment facilities found in the entire subcategory. For the purpose of cost estimating, it is necessary to specify cost rationale, define a set of initial assumptions, and consider the variability of factors such as waste water flows, pollutant load, unit treatment process, plant age, etc. General assumptions have been detailed under Section 10 of this report and are employed as the basis for developing baseline model plant cost estimates presented in the subsequent sections dealing with individual industries.

6.2.4 Dissolved Solids in Waste Water Effluents

Many waste treatment plants discharge final effluent into watercourses which feed fresh water streams used as sources of water supply by downstream agencies or industries. Groundwater aquifers which underlie large portions of the country are tapped to supply fresh water through wells serving public and industrial water needs. Saline wastes discharged into streams or into unlined lagoons can significantly alter the salt content (total dissolved solids) of the fresh water. Although Federal regulations seldom limit the total dissolved solids or the various ions such as chloride, sulfate, bicarbonate, and nitrate, these constituents can be of serious concern to local water users.

To protect the mineral quality of ground and surface waters State and local water pollution control agencies typically establish limits on the discharge of substances which contribute sodium, potassium, hardness, chloride, sulfate, or conductivity, which is a measure of total solids in solution. This restriction can affect the chemicals chosen for waste treatment. For example, alkaline precipitation can be accomplished by using lime, which forms an insoluble calcium sludge, or by adding caustic soda, forming a soluble sodium salt.

In choosing an acid for neutralization of alkaline wastes, it is important to weigh the overall effects of chloride (from hydrochloric acid) and sulfate (from sulfuric acid), particularly with respect to irrigational use of the receiving water.

Chemicals used in the model plant processes were selected on the basis of best performance, including consideration of scaling problems, which can be severe when calcium and sulfate are at saturation levels. It may be necessary to alter the nature of chemicals used at a specific plant, in order to meet local water quality requirements.

Intentionally Blank Page

SECTION 7

ASSESSMENT OF TECHNOLOGY FOR ADVANCED TREATMENT AND CONTROL

7.1 INTRODUCTION

In the inorganic chemicals industry, pollution abatement practices vary and a wide range of treatment technologies can be found, ranging from no treatment to the application of highly advanced technologies for the removal of specific pollutants.

Until the NRDC Consent Decree, industry attention was primarily directed towards general pollution problems including removal of trace metals, but not towards treatment of over 100 individual specific organic compounds now listed as toxic pollutants. Even with the classical (conventional and nonconventional) pollutants, treatment technology has been directed to removal down to the part per million level, whereas now the thrust is towards part per billion level requirements. For both these reasons, higher level technologies are not in place in the inorganic chemicals industry, and it is necessary to look into technologies that have been applied in other industries or developed at the laboratory or pilot plant scale specifically for the removal of these toxic substances from industrial waste water, and determine whether they can be adopted as viable technological options.

A list of candidate technologies was compiled from the literature, in-house expertise, and industry contacts. These were evaluated with respect to:

1. Treatment effectiveness
2. Cost
3. Nonwater pollution environmental effects
4. Applications in the inorganic chemicals industry or on other industrial wastes with similar waste water characteristics.

The anticipation that few of the organic toxic pollutants would be found in inorganic chemical wastes was justified by the results of the analytical programs. Only one industrial subcategory, namely, Chlor-Alkali production using graphite anodes had potentially significant levels of organic toxic pollutants. As a result, the initial search for candidate BAT technologies became limited to treatment technologies for the thirteen metals, cyanide, and asbestos.

The technologies finally adopted were not new or untried technologies since it was found that most treatment requirements could be met by taking conventional techniques--for example, chemical precipitation--and developing them to a higher degree of engineering and design sophistication, so that optimum removal efficiencies could be achieved.

The following pages describe the theoretical basis for treatment systems adopted for BAT application.

7.2 HYDROXIDE PRECIPITATION

Hydroxide precipitation is the most widely used technology for removing trace metals from waste waters, with lime or caustic soda commonly used to supply the hydroxide ions. Under suitable conditions the metals form insoluble metal hydroxides which can be separated from solution.

The chemistry of the process is not simple, and must be understood for each metal. Many metals are amphoteric, the optimum pH for precipitation varies, and organic complexes can interfere. A simple form of the reaction may be written as:

$$M^{++} + 2OH^{-} = M(OH)_2 \qquad (1)$$

Metal ion + two hydroxyl ion = insoluble metal hydroxide

If the pH is below the optimum for hydroxide precipitation soluble complexes form:

$$M^{++} + OH^{-} = M(OH)^{+} \qquad (2)$$

Metal ion + hydroxyl ion = soluble metal complex

Since most metals have the capability of coordinating with other ions or molecules, these simple equations assume that the hydroxonium ion is the coordinated species. However, if organic radicals are present, they can form chelates and mask the typical precipitation reactions:

$$M^{++} + OH^{-} + nR = M(R)nOH^{+} \quad (3)$$

Metal ion + hydroxyl ion + organic ions = soluble metal chelate

Such complexes may require unusual treatment to hydrolyze them, and their presence often explains why some treatment practices yield relatively poor results.

Assuming the absence of organic complexing agents, the treatment levels attainable by hydroxide precipitation can be forecast from a knowledge of the pH of the system. Figure 7-1 shows the theoretical solubility of those metals which form insoluble hydroxides, while Table 7-1 shows the solubility product constants. For comparison, the values for sulfides are also given.

It is clear from the range of optimum pH's illustrated that for waste waters containing more than one metal, no single optimum pH exists, and problems arise at the threshold of the alkaline range (circa pH 10) where some metals have least solubility, while others are at the point of redissolving as an anionic species. For successful application as a waste water treatment technology, careful control of pH must be practiced if the best removals are to be achieved.

In practice the solubility of metallic hydroxides, and the tendency for fine insolubles to remain in suspension may yield effluents which will not meet ug/l standards, and hydroxide precipitation is often supplemented by the use of coagulating agents to improve solids removal, or sulfide co-precipitation to reduce ultimate solubilities.

In practice, the technology uses unit process steps which are simple, well-established, and well-understood by the industry.

Depending on the quantity of waste flow, the treatment can either be a batch or continuous operation, with batch treatment being favored when waste flows are small. In batch treatment the equipment usually consists of two tanks, each with a capacity to treat the total waste water volume expected during the treatment period. These systems can be economically designed for flows up to 50,000 gallons per day (5).

The treatment tanks serve the multiple functions of equalizing the flow, acting as a reactor and as a settler. During operation the waste water is stirred, and a homogeneous sample is taken and analyzed to determine the chemical dosage requirements. The chemicals are then added, mixed and stirred for about 10 minutes. After the reaction is complete, the solids

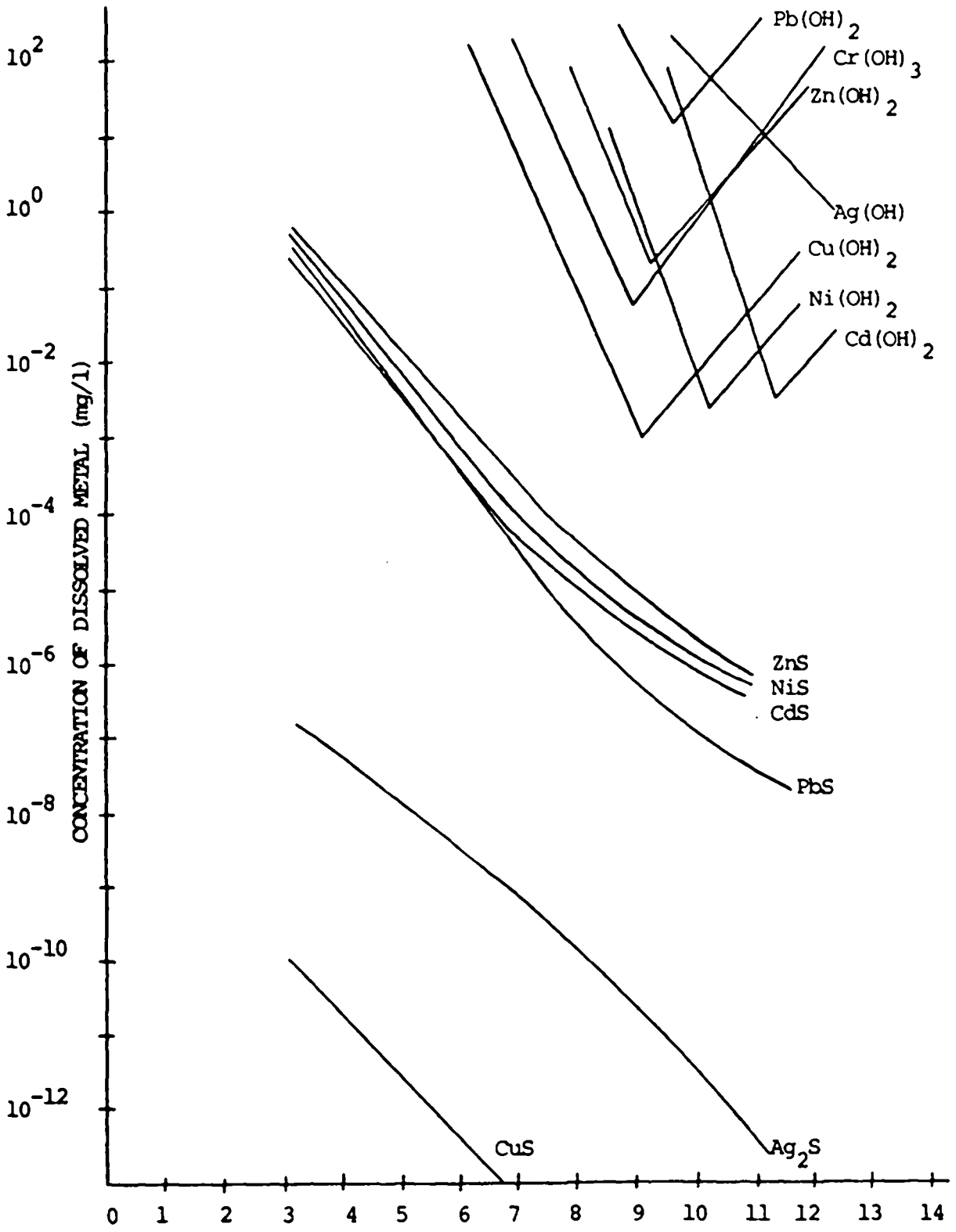

Figure 7-1. Solubility of metal hydroxides and sulfides as a function of pH.

TABLE 7-1. SOLUBILITY PRODUCTS OF TRACE METALS

Metal	Solubility Product Constant (log K_{sp}) Metal Hydroxide	Metal Sulfide	Ethyl Xanthate
Cadmium, Cd	13.6	26.1	13.6
Copper, Cu	18.6	35.2	-
Ferrous, Fe^{+2}	15.3	16.9	7.1
Lead, Pb	16.1	26.6	16.9
Mercury, Hg	25.4	52.2	37.8
Nickel, Ni	14.8	25.7	11.9
Zinc, Zn	15.7	25.2	8.3
Chromium (VI), Cr^{+6}	8.9	-	-

are allowed to settle for a few hours. The clear liquid is then decanted and discharged. Settled sludge is retained to serve as a seed for crystal growth for the next batch, but must be drawn off periodically and disposed of, usually in a chemical landfill.

For layer daily flows a typical continuous flow treatment scheme consists of a flash mixer, flocculator, settling unit with sludge storage tank, and, in some cases, a filtration system.

The ability to separate the solids from the waste water is important. Metallic hydroxides tend to be gelatinous and separate poorly in gravity separators. Finely suspended solids tend to pass out with the effluent and increase the total metal content. Thus, improvements in precipitation applications have been directed toward fine solids removal, and this is reflected in the addition of various filtration systems and the use of flocculant aids as improved levels of treatment.

Hydrated lime suspensions are more commonly used than caustic soda as the hydroxide source because they are cheaper. However, if there is sulfate ion present in the waste water, gypsum will be formed:

$$Ca\ (OH)2 + (SO4)^{--} = CaSO4 + 2OH^- \qquad (4)$$

Hydrated lime + sulfate ion = calcium sulfate (gypsum) + hydroxyl ions

This increases the sludge produced, may cause scaling problems in pipelines, and may clog a dual media filter. Using caustic soda is more expensive, but it generally eliminates the scaling problem. Total dissolved solids in the form of sodium salts are increased in the caustic soda treated waste waters. Although low concentrations of sodium are not regarded as polluting, high levels can make drinking water unpalatable, limit the use of water for agriculture, and promote degradation of the structure of arable soils. Thus, where high total dissolved solids are of concern, lime would be the preferred neutralizing agent.

This treatment technology is widely applied in treating industrial waste waters. Industries that are using hydroxide precipitation include:

Inorganic Chemicals
Plating and Metal Finishing
Mining
Textiles
Steel and Iron
Non-Ferrous Metal Processing and Electronics

Better than 99 percent removal of trace metals have been reported in the literature with final concentrations in the treated effluents ranging from sub ppm to low ppm (see Tables 8-1 through 8-10).

7.3 FERRITE COPRECIPITATION

An interesting variation on the theme of hydroxide precipitation is a process developed in Japan for the removal of heavy metals from acidic waste water. The process, known as ferrite coprecipitation, has the potential for producing a marketable residual by converting the metal ions in solution into insoluble ferromagnetic oxides or ferrites which can be removed magnetically or by filtration (5). The treatment is applied by adding a ferrous salt to the metal-bearing waste water, then neutralizing and oxidizing the complex heavy metal-ferrous hydroxide precipitate by aeration to form the stable ferrite coprecipitate. Particle sizes are reported to be relatively large and sludges formed can be safely disposed of by landfilling.

Although extensive performance data have not been developed, the information available indicates that very high removal efficiencies can be achieved for most of the common heavy metals, including mercury and hexavalent chromium. The method has not been considered here as an available technology due to the lack of sufficient information on chemical dosing requirements, energy requirements, and performance in situations similar to those found in the inorganic chemicals industry. In connection with waste water treatment in the Titanium Dioxide Subcategory for the sulfate process, the wastes contain considerable amounts of ferrous iron from the processing of ilmenite ore and the current practice of neutralization and aeration may involve the same chemistry as the ferrite coprecipitation process.

7.4 SULFIDE PRECIPITATION

The basic principle of sulfide treatment technology is similar to that of hydroxide precipitation. Sulfide is added to precipitate the metals as metal sulfides and the sludge formed is separated from solution by gravity settling or filtration. Sodium sulfide and sodium bisulfide are the two chemicals commonly used, with the choice between these two precipitation agents being strictly an economic consideration.

Metal sulfides form according to the following equation:

$$M^{++} + Na_2S = MS + 2Na^{+} \qquad (5)$$

Metal ion + sodium sulfide = insoluble metal sulfide + sodium ions

Figure 7-1 shows the theoretical solubility of the metals that form insoluble sulfides, while Table 7-1 shows the corresponding solubility product constant.

The major problem in applying sulfide precipitation techniques is associated with the toxicity of sulfides. This warrants both care in application and post treatment systems to remove excess sulfide. Pretreatment involves raising the pH of the waste stream to minimize evolution of hydrogen sulfide gas.

A recently developed and patented process to eliminate the potential hazard of excess sulfide in the effluent and the formation of gaseous hydrogen sulfide uses ferrous sulfide as the sulfide source (6). The fresh ferrous sulfide is prepared by adding sodium sulfide to ferrous sulfate. The ferrous sulfide slurry formed is added to a waste water to supply sufficient sulfide ions to precipitate metal sulfides which have lower solubilities than ferrous sulfide. Typical reactions are:

$$FeS + Cu^{++} = CuS + Fe^{++} \qquad (6)$$

Ferrous sulfide + copper ion = insoluble copper sulfide + iron ion

$$FeS + Ni\ (OH)2 - Fe(OH)2 + NiS \qquad (7)$$

Ferrous sulfide + nickel hydroxide = ferrous hydroxide + insoluble nickel sulfide

A detention time of 10-15 minutes is sufficient to allow the reaction to go to completion (7). Ferrous sulfide itself is also a relatively insoluble compound. Thus the sulfide ion concentration is limited by the solubility of ferrous sulfide, which amounts to about 0.02 mg/l, and the inherent problems associated with conventional sulfide precipitation are minimized (8).

One other advantage of this process is that if chromium (VI) is present, it will also be reduced at the pH of normal operation (8 to 9) and precipitate as the trivalent hydroxide (Cr III).

Treatment systems for sulfide precipitation are similar to those used for hydroxide precipitation. A continuous treatment scheme generally consists of a pH adjustment tank, flash mixer, flocculator, settling units with sludge storage, and a dual media filter.

Before the addition of sodium sulfide or bisulfide the pH of the incoming wasteflow is adjusted to pH of 7-8 in the first

reaction tank to reduce the formation of obnoxious hydrogen sulfide gas. The chemicals are then added to the flash mixer where they are thoroughly mixed with the waste water.

After the flash mix, the waste water passes through a flocculating basin where the floc agglomerates and settles in the settling unit. The overflow from the settling unit generally passes through a filter to remove any fine precipitates. Any excess sulfide will need to be removed before final discharge. This can be achieved either by aeration or other chemical oxidation techniques.

Sulfide precipitation is being practiced in the inorganic chemicals industry, mining industry, textile industry, and nonferrous metal processing industry. Most of the Chlor-Alkali industry is applying this technology to remove lead or mercury from its waste streams.

Literature citations on the efficiency of sulfide precipitation (9, 10, 11) indicate that most results are in the sub ppm range, and that sulfide treatment is superior to hydroxide treatment for the removal of several trace metals. A recent report concluded that, with no complexing agents in the waste, the following effluent quality can be achieved (11).

Metals	Concentration
Cadmium	0.01 mg/l
Copper	0.01 mg/l
Zinc	0.01 mg/l
Nickel	0.05 mg/l
Chrome (total)	0.05 mg/l

Adding ferrous sulfide as a polishing step to remove residual metals appears to be a promising, economical technology. Although there is no full-scale treatment system operating in the inorganic chemicals industry, pilot studies on chrome pigment waste indicate that this process is superior to sulfur dioxide reduction followed by hydroxide precipitation (12).

7.5 THE XANTHATE PROCESS

The use of xanthates for the removal of metals from waste streams appears to be a new, promising technology for treating metal-bearing waste waters. Xanthates contain functional groups capable of forming insoluble complexes with metals, and the sludge so formed can be separated by conventional means.

Xanthates can be generated by mixing starch or cellulose with carbon disulfide in a caustic medium. Three types of xanthates have been proven in bench pilot scale studies to be effective in removing cadmium, chromium (III), copper, iron, lead, mercury, nickel, silver and zinc from industrial waste waters (13-20). These are:

Soluble starch xanthate with a cationic polymer,

Insoluble starch xanthate, and

Fibrous cellulose xanthate

The general removal mechanism is as follows:

$$2\ [ROCS(=S)Na] + M^{++} = [ROCS(=S)2M] + 2Na^{+} \qquad (8)$$

Xanthate + metal ion = insoluble metallic xanthate + sodium ions

where R = starch or cellulose

Unlike hydroxide precipitation, this process is reported to be effective in removing metals over a wide pH range of 3 to 11, with an optimum range between 7 and 9.

Brass mill waste waters, lead battery effluent, circuit board rinse waters, electroless copper plating rinse waters, pyrophosphate electroplating rinse waters, and copper etching rinse waters were studied in a pilot plant with insoluble starch xanthate as the complexing agent (20). This pilot study demonstrated that the xanthates can either be added to a reactor to mix with the waste waters or be applied as a precoat on a pressure filter (20). Results of these pilot studies showed that metals were reduced to below 50 µg/l (ppb).

Another study indicated cellulose xanthate is as effective as starch xanthate in removing trace metals. The following table summarizes the result of the study with a cellulose xanthate dosage of 90 mg/l and a contact time of 30 minutes (18-19):

	Concentration, mg/l	
Metals	Influent	Effluent
Cadmium	1.35	0.027
Chromium	0.30	0.022
Copper	1.6	0.06-0.14
Iron	3.1	0.08-0.36
Lead	3.9	0.008-0.021
Nickel	2.4	0.077
Zinc	1.0	0.03-0.04

This study also concluded that cellulose xanthate is superior to starch xanthate in terms of sludge settling characteristics, filterability, and handling.

Xanthate may also be used as a complexing agent to prevent the formation of soluble anions from insoluble amphoteric metal hydroxides.

The xanthate process is a relatively new technology, and the reagent compounds are not yet available in commercial quantities. More information is needed on dosage rates in continuous flow operations. Potentially the metals can be recovered by leaching the xanthate complex with nitric acid, but metal recovery has not been demonstrated yet. Sludge disposal problems may arise if the sludge complex is unstable and, if xanthates are to be generated on site, care will be needed in handling the hazardous carbon bisulfide.

7.6 ION EXCHANGE

Ion exchange is a chemical reaction between the ions in solution and the ionic sites on an exchange resin. Many natural solids (e.g., soils, proteins, and zeolites) exhibit such exchange characteristics. However, synthetic resins are the predominant ones used for ion exchange applications in modern industrial technology. These resins contain functional groups that can react with the ions in solution. Depending on these functional groups, the resins can be classified into:

Strongly acidic cation exchanger,
Weakly acidic cation exchanger,
Strongly basic anionic exchanger, and
Weakly basic anionic exchanger.

Cation exchangers are capable of exchanging with cations in solution. Strongly acidic cation exchangers contain functional groups such as sulfonates, (-SO3H and -SO3Na), while weakly acidic exchangers have functional groups derived from carboxylic acids, (-COOH and -COONa).

Anionic exchangers are used to exchange with the anions in solution. In general, strongly basic exchangers contain amine functional groups (-R3NOH and -R3NCl), and weakly basic exchangers contain ammonia functional groups (-NH3OH and -NH3Cl)

When the functional groups are used up in the reaction, the resins can usually be regenerated. Cationic resins can be regenerated by sodium chloride, hydrochloric acid, sulfuric acid or sodium hydroxide. Anionic resins are regenerated by sodium

hydroxide, ammonium hydroxide, sodium carbonate, sodium chloride, or hydrochloric acid.

The exchanger can either be added to the waste waters in batch operations or be packed in a fixed bed or column. Fixed bed is by far the more effective and hence more popular. The operation generally follows a four-step cycle: exchange (service), backwash, regeneration, and rinse.

During the exchange step, the reaction between the ions in solution and the ionic sites in the resin takes place as the waste water passes down the bed. The reaction is generally regarded as a result of electrostatic attraction (20). Therefore, the size of the hydrated ion and the charge on the ion are the determining factors for the exchange reaction. A trivalent ion is attracted more strongly than a bivalent ion which is in turn attracted more strongly than a monovalent ion. For ions with the same charge, the smaller hydrated ion is capable of moving closer to the exchange site, and is thus favored.

Many synthetic resins contain functional groups that are selective to certain metals. For example, a resin manufactured by a European company reacts preferentially with mercury (Hg++) and mercuric chloride (HgCl+) ions according to the following equations:

$$2RSH + Hg^{++} = RSHgSR + 2H^{+} \quad (9)$$

Resin + mercury ion = insoluble resin complex + hydrogen ions

$$RSH + HgCl^{+} = RSHgCl + H^{+} \quad (10)$$

Resin + mercuric chloride ion = insoluble resin complex + hydrogen ions

The exchange reaction is governed by the law of mass action. During the reaction, the affinity of the resin for the two ions is so great that essentially all the mercury or mercury chloride-resin complex formation equilibria are shifted toward the formation of Hg++ and HgCl+ which are rapidly removed. A 5 ppb residual mercury concentration in the effluent is achieved by this process (22).

After all the exchangeable sites in the resin are used up, the bed is backwashed by passing clean water through to loosen up the bed and to remove any fine particulates that are trapped inside the bed.

After the backwash cycle the resins can be regenerated with the appropriate regenerant.

$$RSHgCl + HCl = RSH + HgCl_2 \quad (11)$$

Insoluble resin complex + hydrochloric acid = regenerated resin + mercuric chloride

One attractive feature of the ion exchange process is that it concentrates the metals in the regeneration step, and thus provides a potential for their recovery. However, if recovery is not feasible, this creates a secondary stream which needs to be treated.

A recent study found that sodium alumino silicates (zeolites) might be a low-cost exchanger that can be discarded after a one-time use (22). This would eliminate the regeneration step. On a batch study with a five-minute contact time, cadmium and mercury were removed to below 10 ppb. Thermodynamic considerations show this exchanger to have a high affinity for cadmium, copper, mercury, nickel, silver, zinc, cesium, and barium.

Ion exchange is a proven technology that can reduce metal concentrations down to low levels. However this technology is used only in limited industrial pollution abatement applications because of the high cost associated with the process. Consequently, ion exchange has not been recommended in this report for BAT technology.

7.7 REDUCTION PROCESSES

Many metals can exist in solution in several oxidation states, and it may be necessary to convert from a higher valency state to a lower one in order to apply a given chemical reaction. The classic example is chromium, which as the trivalent chromic ion will precipitate as the hydroxide in alkaline solution, while the hexavalent chromate or dichromate ion will not. The latter needs to be reduced if precipitation is to occur.

Hexavalent chromium (e.g., $CrO_4^{=}$ and $Cr_2O_7^{=}$) is toxic and soluble. The most efficient way of removing this from solution is a two-step process of reduction followed by precipitation.

Chromium (III) is much less toxic than chromium (VI), and forms an insoluble hydroxide which can be removed from solution by settling and filtration.

A number of chemicals are used for the reduction of chromium. Most common are sodium bisulfite, sodium metabisulfite, sulfur dioxide and ferrous salts. The reduction is accomplished readily at low pH with these reagents. Typical reduction reactions are:

$$3SO_2 + Cr_2O_7^{=} + 2H^+ = 2Cr^{+++} + 3SO_4^{=} + H_2O \quad (12)$$

Sulfur dioxide + dichromate ion + hydrogen ion = trivalent chromium ion + sulfates and water

$$3SO_3^{=} + Cr_2O_7^{=} + 8H^+ = 2Cr^{+++} + 3SO_4 = +4H_2O \quad (13)$$

Sulfite ion + dichromate ion + hydrogen ion = trivalent chromium ion + water

$$6Fe^{++} + Cr_2O_7^{=} + 14H^+ = 2Cr^{+++} + 6Fe^{+++} + 7H_2O \quad (14)$$

Ferrous ion + dichromate ion + hydrogen ion = trivalent chromium ion + ferric ion + water

The reduced chromium and the ferric ions produced in the third equation will exist as the soluble sulfate at acid pH's. If the pH is above 5, the reaction rate is drastically reduced, and although dithionite will effect reduction at neutral pH's, it is very costly and its use may be contraindicated.

After the reduction step, lime or caustic soda is added to raise the pH to 8.5-9.0. Trivalent chromium will be precipitated.

$$Cr^{+++} + 3OH^- = Cr(OH)_3 \quad (15)$$

Trivalent chromium ion + hydroxide ion = insoluble chromium hydroxide

The theoretical solubility limit of chromium hydroxide is above 0.02 mg/l (8). It is reported that applying sulfur dioxide to a pigment waste consistently reduces Cr (VI) and Cr(T) to 0.5 mg/l and 1.5 mg/l respectively as 30-day averages (9) (10). By applying ferrous sulfide to a plating waste with an initial Cr(VI) concentration of 128 mg/l and Cr(T) concentration of 153 mg/l, an effluent quality of less than 0.05 mg/l of either species is achieved (12).

A one-step precipitation-reduction process using sodium bisulfide is used in a dichromate plant to remove chromium from its waste water. An effluent quality with less than 1 mg/l Cr(VI), and less than 5 mg/l Cr(T) was reported (3).

One other common reduction process is the application of sodium borohydride to reduce metals in waste streams. Sodium borohydride is a mild but effective reducing agent (3), and is currently used in some chlor-alkali plants to reduce the soluble mercury ion to metallic mercury which is removed from solution by carbon adsorption:

$$4Hg^{++} + BH_4^- + 8OH^- = 4Hg + B(OH)_4^- + 4H_2O \quad (16)$$

Mercury ion + borohydride ion + hydroxyl ion = insoluble mercury metal + borate ion + water

A mercury level of 0.01 mg/l in the final effluent has been reported (3).

Sodium borohydride is also reported to be effective in removing silver, mercury, gold, lead, and cadmium (5). However, this technology is only being applied in limited cases, the cost of the chemical being the major drawback. The cost of sodium borohydride was $16.00 per pound in 1978 (23).

7.8 OXIDATION PROCESSES

The oxidation of organic substances is generally carried out by thermal processes such as wet oxidation and incineration, or by biological processes such as the activated sludge process, trickling filters, biodiscs, and aerated lagoons.

Incineration is actually a combination of oxidation and pyrolysis. Both involve chemical changes resulting from heat. Oxidation involves actual reaction with oxygen, while pyrolysis refers to rearrangement or breakdown of molecules at high temperatures in the absence of oxygen. There are five types of incinerators available commercially. These are rotary kiln, multiple hearth, liquid injection, fluidized bed, and pyrolysis (24). A minimum temperature of 1000 degrees C and a residence time of two seconds is required for the reaction to proceed. This process has been shown to be successful in reducing pesticides to harmless molecules (25).

Wet oxidation is a process in which an aqueous waste can be oxidized in the liquid phase in a closed, high-temperature, high pressure vessel. This reduces some of the problems (such as air pollution from exhaust gas), inherent in incineration. Wet oxidation has been used for a variety of wastes including pulping waste and acrylonitrile liquor (26). A percent reduction in excess of 99.8 of some of the toxic pollutants has been reported (27).

Thermal oxidation processes are not expected to have much application in the inorganic chemicals industry, mainly because of the high energy cost required and the low level of organic contamination found in the wastes.

The application of chemical oxidation to industrial wastes is well established for cyanides, sulfite, ammonia, and other

harmful species in dilute waste streams (phenols, mercaptans, polysulfides, etc.). Common chemicals used as oxidizing agents included chlorine, hypochlorite, hydrogen peroxide, potassium permanganate, ozone, and chlorine dioxide. Air and oxygen are also used.

The most widely used chemical oxidation technology applicable to the inorganic chemicals industry is the oxidation of cyanide. The oxidation reaction between chlorine and cyanide is believed to proceed in two steps as follows:

$$CN^- + Cl_2 = CNCl + Cl^- \quad (17)$$

Cyanide + chlorine = cyanogen chloride + chloride ion

$$CNCl + 2OH^- = CNO^- + Cl^- + H_2O \quad (18)$$

Cyanogen chloride + hydroxyl ion = cyanate ion + chloride ion + water

The formation of cyanogen chloride (CNCl) is essentially instantaneous. The second reaction, the formation of cyanate, is accomplished most rapidly and completely at a pH of 10 or higher (9, 28). A detention time of 30 minutes to two hours is usually allowed.

The cyanates can be further decomposed into nitrogen and carbon dioxide by excess chlorination or acid hydrolysis:

$$2CNO^- + 4OH^- + 3Cl_2 = 6Cl^- + 2CO_2 + N_2 + 2H_2O \quad (19)$$

Cyanate + hydroxyl ion + chlorine = chloride ion + carbon dioxide + nitrogen + water

$$CNO^- + 2H_2O = CO_2 + NH_3 + OH^- \quad (20)$$

Cyanate + water = carbon dioxide + ammonia + hydroxyl ion

The first reaction can be accomplished in about one hour if the pH is adjusted to 8.0-8.5. Acid hydrolysis usually takes place at pH 2-3 and care must be taken to avoid the liberation of the toxic cyanogen chloride as a gas. Hydrolysis is not usually the chosen option.

Other common chemicals used to oxidize cyanide include sodium hypochlorite, ozone, and hydrogen peroxide. The reaction for sodium hypochlorite is essentially the same as for chlorine. For ozone and hydrogen peroxide, the oxidation step proceeds as follows:

$$O_3 + CN^- = O_2 + CNO^- \quad (21)$$

Ozone + cyanide = oxygen + cyanate ion

$$H_2O_2 + CN^- = CNO^- + H_2O \quad (22)$$

Hydrogen peroxide + cyanide = cyanate ion + water

The advantage of using these two oxidizing reagents is that no dissolved solids are added to the waste water. In addition, excess chlorine is not discharged.

A patented process uses hydrogen peroxide and formaldehyde to decompose cyanide at about 120 Deg. F. This has the advantage of precipitating cadmium and zinc simultaneously (9).

Alkaline chlorination is currently being practiced in one hydrogen cyanide production plant. Laboratory studies in the plant indicated that the presence of ammonia in the waste water reduces the efficiency of cyanide removal. It is well known that ammonia reacts with chlorine or hypochlorous acid to form chloramines:

$$NH_3 + HOCl = NH_2Cl + H_2O \quad (23)$$

Ammonia + hypochlorous acid = monochloramine + water, etc.

$$NH_2Cl + HOCl = NHCl_2 + H_2O \quad (24)$$

$$NHCl_2 + HOCl = NCl_3 + H_2O \quad (25)$$

If excess chlorine is added, chloramines can be converted into nitrogen oxide(s):

$$2NH_3 + 4HOCl = N_2O + 4HCl + 3H_2O \quad (26)$$

This equation is not exact because the final form of nitrogen oxide is believed to be a mixture of nitrous oxide, nitrogen dioxide and nitric oxide.

The treatment of cyanide by chemical oxidation is currently practiced in the following industries:

Inorganic Chemicals (Hydrogen Cyanide Production)

Mining

Plating

The free cyanide level after treatment is generally below 0.1 mg/l (9).

7.9 MEMBRANE PROCESSES

Membrane processes have emerged in the last decade as a promising new technology for the treatment of saline water and waste waters. A membrane is a semi-permeable barrier which allows the transport of some molecules (ions) and retains others. The driving force can either be electropotential differences (electrodialysis) or pressure difference (reverse osmosis and ultrafiltration). The major application of these processes has been the desalination of brackish water and sea water. More recently, these have also found application in a number of industries, including:

Mining
Electroplating
Metal Finishing
Printed Circuit Board Manufacturing
Battery Manufacturing
Pulp and Paper
Food Processing

In electrodialysis, an even number of alternating anion and cation selective membranes are placed between two electrodes. When current is applied the anions are attracted to the anode, and cations are attracted to the cathode. In the process of migration, the cations pass through the cation-permeable membrane and are blocked by the anion-permeable membrane. Likewise, the anions pass through the anion-permeable membrane and are blocked by the cation membrane. This results in alternating paths of purified water and concentrated reject (Figure 7-2).

The electrodialysis membranes are made very thin and are assembled in stacks. The flow path is the active portion of the cells. Pretreatment to remove suspended materials is absolutely essential. Other materials in the waste feed that may lead to membrane fouling include high organic content, calcium sulfate, and certain complex ions such as $ZnCl^-$ which can partially convert the anion membrane to the cation form, with significant loss in system performance (28).

As ionic concentration decreases, the electroconductivity of the water also decreases, making it less efficient to remove the remaining salt. Most operations do not produce a product water of less than 500 mg/l total dissolved solids.

Reverse osmosis (RO) and ultrafiltration (UF) are similar in basic concepts. Both are pressure-driven separation processes that employ high-flux semi-permeable membranes operating under

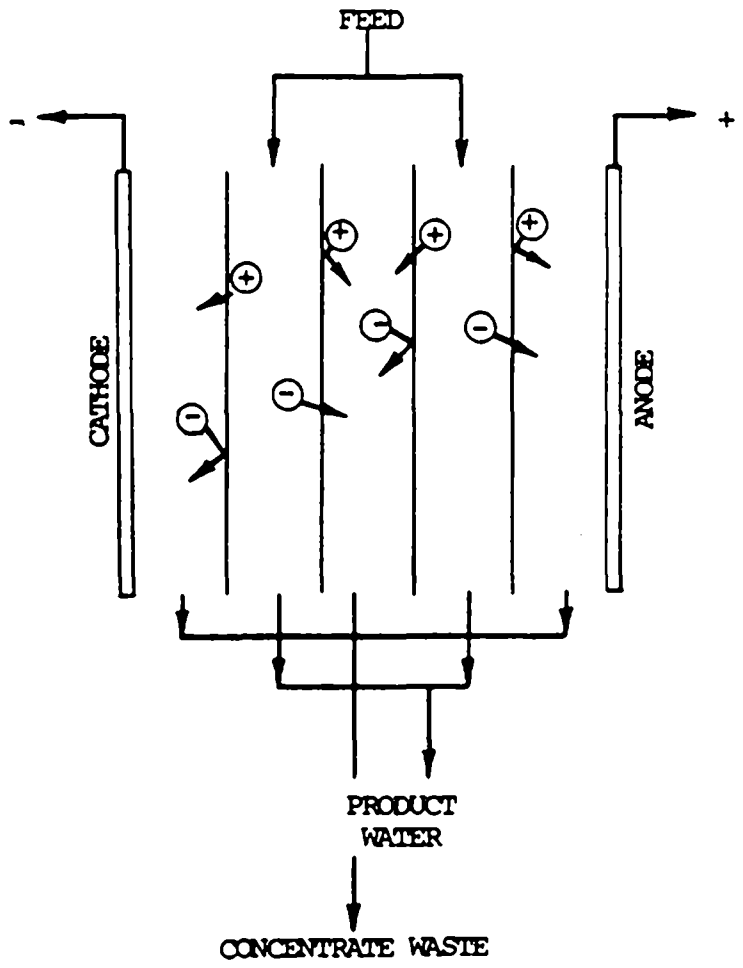

Figure 7-2. Electrodialysis process.

dynamic flow conditions (29). In contrast to electrodialysis, these involve the transport of solvent, not solute, across the membrane.

Osmosis is a process in which solvent from a dilute solution is transported spontaneously across a semi-permeable membrane into a concentrated solution. By applying enough pressure to overcome this osmotic pressure, reverse osmosis, i.e., the passage of solvent from a concentrated solution to a dilute solution through a semi-permeable membrane, occurs. The operating pressure of reverse osmosis units is usually between 350 and 600 psi. Ultrafiltration usually operates at a much lower pressure (5 to 100 psi). The predominant transport mechanism is selective sieving through pores. The membrane retains high molecular weight dissolved solids such as synthetic resins, colloids, and proteins. The upper and lower molecular weight limit is generally defined as 500,000 and 500 respectively.

Membranes are usually fabricated in flat sheets or tubular forms. The most common material is cellulose acetate but other polymers such as polyamides are used. There are four basic module designs: plate-and-frame, tubular, spiral-wound, and hollow fiber. Table 7-2 is a comparison between the various reverse osmosis modules. Membrane processes are effective in removing (concentrating) inorganic and organic substances from a wastestream. Usually extensive pretreatment is required to reduce the suspended solids and control pH. There are uncertainties about operation efficiency, membrane lifetime, rejection specificity, and other factors. If recovery is not feasible, the concentrated reject must be disposed or treated by other methods. The high operation and capital cost limits the widespread application of these technologies. For these reasons membrane technique is not recommended as a BAT technology for this industry.

7.10 ADSORPTION

Adsorption is a surface phenomenon in which a substance is accumulated on the surface of another substance. Sorption of a solute on a solid surface is widely used in pollution abatement practices. The term "adsorbate" refers to the substance being concentrated, and the term "adsorbent" refers to the material that provides the surface.

Activated carbon is the prevalent adsorbent used. Both inorganic and organic substances are known to be removed effectively by activated carbon. Certain chlor-alkali plants are currently using activated carbon as a polishing step to remove mercury.

TABLE 7-2. COMPARISON OF REVERSE OSMOSIS CONCEPTS

	Packing Density (ft^2/ft^3)	Water Flux at 600 psi (gal/ day/ft^2)	Water Output Per Unit Volume (gal/ day/ft^2)	Sodium Chloride Rejection	Parasitic Pressure Losses (psi) Feed Channel	Parasitic Pressure Losses (psi) Product Channel	Useful pH Range	Ease of Cleaning
Plate-and-Frame	150	10	1500	Very good	30	30	2-8	Fair
Large tubes	50	10	500	Very good	50	10	2-8	Very good
Spiral	250	10	2500	Very Good	10	50	2-8	Good to very good
Polyamide hollow fine fibers	5000	1 (400 psi)	5000	Fair	10	50	0-12	Fair
Cellulose acetate hollow fine fibers	2500	3 (250 psi)	7500	Good	10	50	3-7	Fair

Source: Weber, Physicochemical Processes, 1972.

Activated carbon is made by charring basic substrates, such as wood, coke, coal, shell, husks, etc., at 600 degrees C in a controlled atmosphere, where oxygen is kept low by adding carbon dioxide or steam. This process drives out volatiles, leaving a porous carbon lattice in an "activated" state.

Activated carbon can be obtained in powdered and granular form. Powdered carbon is about 50-70 microns in diameter, and 90 percent should pass through a 300-mesh screen. Granular carbon is about 0.1-1 mm in diameter, and because of this is three times more expensive than powdered carbon.

The application involves the passage of the waste waters through a contact bed. When the bed is exhausted, the carbon is either regenerated or sent to landfill. It is economical for large plants to regenerate the carbon. This can be done either by thermal regeneration in a rotary kiln or multihearth incinerator, or by chemical regeneration by using oxidizing agents such as hydrogen peroxide or acids and bases.

The application of carbon adsorption has been mainly in organic waste treatment. Recently, there are studies indicating the effectiveness of carbon adsorption in removing mercury, cadmium, cyanide, chromium, lead, nickel, zinc, arsenic, and copper (30, 31).

An interesting development in carbon technology is its use after the waste water is ozonized. This combination (known as Bacteriologically Activated Carbon or BAC) has proved effective in treating otherwise biologically inactive organic compounds. The process involves chemical modification of the organics by the ozone. Maintenance of an aerobic region on the carbon allows a biologically activated film to develop and the modified organics are further treated by a mixed process of biological oxidation and carbon adsorption. The system has the advantage of being a potential add-on to existing BPT systems, and should be cost effective since it has been found that the carbon only needs regeneration at infrequent intervals.

No industrial applications of this technology are known, although research is under way (32).

Bacteriologically Activated Carbon is a very attractive potential BAT technology for the removal of organic toxic pollutants from waste streams, although no application to the industry subcategories studied in this report was found.

7.11 FLUORIDE REMOVAL

The conventional method of treating fluoride-bearing wastes is to precipitate the fluoride as calcium fluoride by the addition of lime. The reaction is:

$$Ca(OH)2 + 2F- = CaF2 + 2OH- \quad (27)$$

Hydrated lime + fluoride ion = insoluble calcium fluoride + hydroxyl ion

Using this process alone, it is difficult to remove fluoride to below 8 mg/l due to the solubility of calcium fluoride (9, 33). Adding alum with the lime generally improves the removal efficiency. Fluoride ions are removed as follows:

$$Al(OH)3 + F- = Al(OH)2F + OH- \quad (28)$$

Aluminum hydroxide + fluoride ion =
aluminum monofluorohydroxide + hydroxyl ion, etc.

$$Al(OH)2F + F- = Al(OH)F2 + OH- \quad (29)$$

$$Al(OH)F2 + F- = AlF3 + OH- \quad (30)$$

Complexed fluorides are also adsorbed to some extent on the aluminum hydroxide surface and removed in the coagulation process (33). Large amounts of alum (5000 mg/l) are required to reduce the fluoride concentration to below 1 ppm.

Activated alumina has been shown to be effective in removing fluoride and arsenic in waste water (34) and fluoride from drinking water in municipal water treatment practice (35-38). Typically, the fluoride content of raw water can be reduced from about 8 to 1 ppm (38). Application of activated alumina to high fluoride industrial wastes shows that a low ppm effluent can be achieved (39), although high capital and operation costs generally limit the wide application of this process.

Certain process operations used in the manufacture of inorganic fluoride compounds involve the use of sulfuric acid and starting materials which contain silicate or borate impurities. This may lead to the formation of wastes containing fluorosulfonate, hexafluorosilicate or tetrafluoroborate complex ions. Although tetrafluoroborate is usually a very minor constituent and the hexafluorosilicate is readily hydolyzed in treatment systems, the fluorosulfonate ion is fairly stable and presents a serious problem where low levels of total fluoride are required. The lime precipitation method is not effective in removing the fluorosulfonate and the effectiveness of adsorption techniques is not known.

7.12 CHLORINE REMOVAL

The removal of residual chlorine (in the form of hypochlorite) in industrial waste water is normally accomplished by the addition of sulfur dioxide or a related reducing agent such as sodium bisulfite or sodium metabisulfite. Typical reactions are shown in Equations 31 and 32.

$$SO_2 + OCl^- + H_2O = H_2SO_4 + Cl^- \quad (31)$$

Sulfur dioxide + hypochlorite ion + water = sulfuric acid + chloride ion

$$Na_2SO_3 + OCl^- = Na_2SO_4 + Cl^- \quad (32)$$

Sodium sulfite + hypochlorite ion = sodium sulfate + chloride ion

Alternatively, hydrogen peroxide, although relatively expensive may also be used for dechlorination according to Equation 33.

$$H_2O_2 + OCl^- = H_2O + O_2 + Cl^- \quad (33)$$

Hydrogen peroxide + hypochlorite ion = water + oxygen + chloride ion

In the chlor-alkali industry, certain waste water streams may have a sufficiently high loading of chlorine to warrant recovery of the product by air stripping, steam stripping, or extraction by carbon tetrachloride. In some locations, a market exists for sodium or calcium hypochlorite solutions which can be generated by treating the tail gases with caustic soda or lime. This may serve as a means for disposing of waste chlorine which cannot be economically recovered. As alternatives for waste chlorine disposal, the streams may be treated to form the hypochlorite and then decomposed thermally or catalytically. These technologies are discussed in Section 11 dealing with the chlor-alkali industry. Chlorine residuals remaining after the recovery and/or decomposition steps have been taken would be amenable to treatment with reducing agents such as sulfur dioxide, bisulfite, or hydrogen peroxide as described above.

SECTION 8

TREATABILITY ESTIMATES AND LONG-TERM DATA ANALYSIS

8.1 THE DEVELOPMENT OF TREATABILITY ESTIMATES

The review of technological treatment options applicable to the removal of toxic pollutants has led to the conclusion that the particular contaminants found in the raw process waste waters of the subject industries can be effectively controlled by the proper application of fairly well-known and demonstrated techniques. In order to proceed from a general discussion and description of techniques to a detailed evaluation for each subcategory of the levels of removal that can be expected, a summary is now presented of selected treatability data for the 13 toxic metals.

The treated waste concentrations and removal efficiencies reported in the literature are assumed to represent the best performance characteristics that can be obtained under the specified operating conditions. The treatment technologies considered can thus be assigned a set of optimum conditions and best performance estimates for removal of the particular toxic metals that are amenable to treatment. Taking each metal in turn, Tables 8-1 through 8-10 give the initial and final concentrations, the removal efficiencies, and the pH conditions for different treatment technologies. The best performance estimates for metal removal are derived from the tabulated data and are utilized in turn as the bases for making long-term achievable performance estimates. The sequence of analytical steps is:

1. Review and analyze applicable performance data.

2. Estimate best performance under optimum treatment conditions.

3. Estimate achievable performance under expected industrial operating conditions.

TABLE 8-1. WASTE WATER TREATMENT OPTIONS AND PERFORMANCE DATA SUMMARY - ANTIMONY AND ARSENIC REMOVAL

Treatment Technology	pH	Initial Concen-tration (mg/l)	Final Concen-tration (mg/l)	Removal (%)	References
Antimony					
Lime/Filter	11.5	0.6	0.4	28	40
Ferric chloride/Filter	6.2	0.5	0.2	65	40
Alum/Filter	6.4	0.6	0.2	62	40
Arsenic					
Lime Softening	-	0.2	0.03	85	9, 10
Sulfide/Filter	6-7	-	0.05	-	9, 10
Lime (260 mg/l)/Filter	10.0	5.0	1.0	80	41
Lime (600 mg/l)/Filter	11.5	5.0	1.4	72	41
Ferric sulfate	5-7.5	0.05	0.005	90	42
Ferric sulfate	6.0	5.0	0.5	90	41
Lime/Ferric Chloride/ Filter	10.3	3.0	0.05	98	9, 10
Activated alumina (2 mg/l)	6.8	0.4-10	<0.4	96-99+	43
Activated carbon (3 mg/l)	3.1-3.6	0.4-10	<4.0	63-97	43
Ferric Chloride	-	0.3	0.05	98	9, 10
Ferric Chloride	-	0.6-0.9	<0.13	-	9, 10

TABLE 8-2. WASTE WATER TREATMENT OPTIONS AND PERFORMANCE DATA SUMMARY - BERYLLIUM AND CADMIUM REMOVAL

Treatment Technology	pH	Initial Concen-tration (mg/l)	Final Concen-tration (mg/l)	Removal (%)	References
Beryllium					
Lime/Filter	11.5	0.1	0.006	99.4	40
Cadmium					
Lime (260 mg/l)/Filter	10.0	5.0	0.25	95	41
Lime (600 mg/l)/Filter	11.5	5.0	0.10	98	41
Lime Softening	5-6.5	0.44-1.0	0.008	92-98	8
Lime/Sulfide	8.5-11.3	0.3-10	0.006	98+	44
Ferrous Sulfide (Sulfex)	8.5-9.0	4.0	<0.01	99+	7,8,11
Ferrite coprecipitation/ Filter	neutral	240	0.008	99+	5

TABLE 8-3. WASTE WATER TREATMENT OPTIONS AND PERFORMANCE DATA SUMMARY - COPPER REMOVAL

Treatment Technology	pH	Initial Concen-tration (mg/l)	Final Concen-tration (mg/l)	Removal (%)	References
Lime/Filter	8.5-9.0	3.2	0.07	98	8
Lime (260 mg/l)/Filter	10.0	5.0	0.4	92	41
Lime (600 mg/l)/Filter	11.5	5.0	0.5	91	41
Ferric sulfate/Filter	6.0	5.0	0.3	95	41
Lime	>8.5	10-20	1-2	90	9,10
Lime	9.5	3.0	0.2	93	45
Alum	6.5-7.0	3.0	0.2	93	45
Lime/Sulfide	5.0-6.5	50-130	<0.5	-	44
Ferrous sulfide (Sulfex)	8.5-9.0	3.2	0.02	99	8
Ferrous sulfide (Sulfex)	8.5-9.0	4.0	0.01	99+	7,8,11
Ferrite Coprecipitation/ Filter	-		0.01	99+	5

TABLE 8-4. WASTE WATER TREATMENT OPTIONS AND PERFORMANCE DATA SUMMARY - CHROMIUM III AND CHROMIUM VI REMOVAL

Treatment Technology	pH	Initial Concentration (mg/l)	Final Concentration (mg/l)	Removal (%)	References
Chromium					
Lime (260 mg/l)/Filter	10.0	5.0	0.1	98	41
Lime (600 mg/l)/Filter	11.5	5.0	0.1	98	41
Reduction/Lime	7-8	140 (as Cr VI)	1.0	—	9,10
Reduction/Lime	7-8	1300 (as Cr VI)	0.06 CrIII	—	3,9,10
Lime Softening	10.6-11.3	—	0.15	98+	46
Lime/Filter	7-9	—	0.05	—	47
Lime	9.5	15	0.1	—	45
Lime	9.5	3.2	<0.1	—	45
Ferrite coprecipitation/ Filter	—	25	0.01	—	5
Ferric sulfate	6.5-9.3	—	—	98+	46
Ferric sulfate/Filter	—	5.0	0.05	99	41
Chromium VI					
Activated carbon (pulverized, Pittsburgh type RC)	3.0	10	1.5	85	48
Same as above	2.0	10	0.4	96	48
Activated carbon (granular)	6.0	3	0.05	98	41
Ferrite coprecipitation	—	0.5	not detectable	—	5
Sulfur dioxide reduction	—	—	0.01-0.1	—	9,10
Bisulfite reduction	—	—	0.05-1.0	—	9,10

TABLE 8-5. WASTE WATER TREATMENT OPTIONS AND PERFORMANCE DATA SUMMARY - LEAD REMOVAL

Treatment Technology	pH	Initial Concen-tration (mg/l)	Final Concen-tration (mg/l)	Removal (%)	References
Lime (260 mg/l)	10.0	5.0	0.25	95.0	41
Lime/filter	8.5-9.0	189	0.1	99.9	5
Lime (260 mg/l)/Filter	10.0	5.0	0.075	98.5	41
Lime (600 mg/l)/Filter	11.5	5.0	0.10	98.0	41
Ferrous sulfate/Filter	6.0	5.0	0.075	98.5	41
Sodium hydroxide (1 hour settling)	5.5	---	1.6	---	10
Sodium hydroxide (24 hour settling)	7.0	---	0.04	---	10
Sodium hydroxide/Filter	10.5	1700	0.60	99+	49
Sodium carbonate/Filter	10.1	1260	0.60	99+	49
Sodium carbonate/Filter	6.4-8.7	10.2-70.0	0.2-3.6	82-99+	10
Sodium carbonate/Filter	9.0-9.5	5.0	0.01-0.03	99+	9,10
Ferrous sulfide (Sulfex)	8.5-9.0	189	0.1	99.9	8
Ferrite coprecipitation/ Filter	---	480	0.01-0.05	99.9	5

TABLE 8-6. WASTE WATER TREATMENT OPTIONS AND PERFORMANCE DATA SUMMARY - MERCURY II REMOVAL

Treatment Technology	pH	Initial Concentration (mg/l)	Final Concentration (mg/l)	Removal (%)	References
Sulfide	-	0.3-50.0	0.01-0.12	-	9,10
Sulfide	10.0	10.0	1.8	96.4	50
Sulfide/Filter	5.5	16.0	0.04	99	50
Sulfide/Filter	4.0	36.0	0.06	99.8	50
Sulfide/Filter	5.8-8.0	0.3-6.0	0.01-0.125	87-99.2	50
Ferrite coprecipitation/ Filter	-	6.0-7.4	0.001-0.005	99.9	5
Activated Carbon	-	0.01-0.05	<0.0005	-	9,10
Activated Carbon/Alum	-	0.02-0.03	0.009	-	46
Activated Carbon	-	0.06-0.09	0.006	-	50

TABLE 8-7. WASTE WATER TREATMENT OPTIONS AND PERFORMANCE DATA SUMMARY - NICKEL REMOVAL

Treatment Technology	pH	Initial Concen-tration (mg/l)	Final Concen-tration (mg/l)	Removal (%)	References
Lime	8.5-9.0	75	1.5	98	8
Lime (260 mg/l)/Filter	10.0	5.0	0.3	94	41
Lime (600 mg/l)/Filter	11.5	5.0	0.15	97	41
Caustic Soda/Filter	11.0	-	0.3	-	49
Ferrous sulfide (Sulfex)	8.5-9.0	75	0.05	99.9	8,11
Ferrite coprecipitation	-	1000	0.20	99.9	5

TABLE 8-8. WASTE WATER TREATMENT OPTIONS AND PERFORMANCE DATA SUMMARY - SILVER REMOVAL

Treatment Technology	pH	Initial Concen-tration (mg/l)	Final Concen-tration (mg/l)	Removal (%)	References
Sodium hydroxide	9.0	54	15	72	13
Ferric sulfate (30 mg/l)	6-9	0.15	0.03-0.04	72-83	46
Lime Softening	9.0-11.5	0.15	0.01-0.03	80-93	46
Chloride precipitation (alkaline chlorination in the presence of cyanide)	-	105-250	1.0-3.5	97+	9,10
Ferric chloride/Filter	6.2	0.5	0.04	98.2	40
Sulfide precipitation	5-11	-	-	very high	9,10

TABLE 8-9. WASTE WATER TREATMENT OPTIONS AND PERFORMANCE DATA SUMMARY - SELENIUM AND THALLIUM REMOVAL

Treatment Technology	pH	Initial Concen-tration (mg/l)	Final Concen-tration (mg/l)	Removal (%)	References
Selenium					
Ferric chloride/Filter	6.2	0.1	0.03	75	40
Ferric chloride/Filter	6.2	0.05	0.01	80	40
Alum/Filter	6.4	0.5	0.26	48	40
Ferric sulfate	5.5	0.10	0.02	82	51
Ferric sulfate	7.0	0.10	0.03	75	51
Lime/Filter	11.5	0.5	0.3	35	40
Lime/Filter	11.5	0.06	0.04	38	40
Thallium					
Lime/Filter	11.5	0.5	0.2	60	40
Ferric chloride/Filter	6.2	0.6	0.4	30	40
Alum/Filter	6.4	0.6	0.4	31	40

TABLE 8-10. WASTE WATER TREATMENT OPTIONS AND PERFORMANCE DATA SUMMARY - ZINC REMOVAL

Treatment Technology	pH	Initial Concen-tration (mg/l)	Final Concen-tration (mg/l)	Removal (%)	References
Lime/Filter	8.5-9.0	3.6	0.25	93	8
Lime (260 mg/l)	10.0	5.0	0.85	83	41
Lime (260 mg/l)/Filter	10.0	5.0	0.80	84	41
Lime (600 mg/l)	11.5	5.0	0.35	93	41
Lime (600 mg/l)/Filter	11.5	5.0	1.2	77	41
Lime/Filter	-	16	0.02-0.23	-	5
Sodium hydroxide	9.0	33	1.0	97	13
Sulfide	-	42	1.2	97	5
Ferrous sulfide (Sulfex)	8.5-9.0	3.6	0.02	99+	8,11
Ferrite coprecipitation	-	18	0.02	99+	5

The third step involves the consideration of treatment system variables under full-scale operating conditions in industrial situations where the design objective would be the simultaneous removal of several waste load constituents. Each industry designs for maximum removal and/or recovery of the major process-related waste substances and utilizes an appropriate technology which is both reliable and cost effective. Optimum treatment conditions for the removal of a particular pollutant can rarely be achieved consistently and any given set of conditions will be somewhat less than optimum for most, if not all, of the treatable constituents. In any well-operated production facility the normal variations in production rates, raw material quality, the desired product mix in some cases, and contact water use requirements may cause severe hydraulic and pollutant load input excursions which at best can be moderated by effective equalization in the treatment system. This is considerably less of a problem in batch treatment than with a continuously operating system. The latter requires continuous feedback monitoring for pH control and chemical dosage in order to maintain the effluent quality within acceptable limits for a number of parameters. Under these conditions, the 30-day averages derived from the actual treated effluent monitoring data (NPDES, etc.) would equate to what has been identified in Step 3 above as the estimated 30-day achievable performance using the same general treatment technology.

A statistical evaluation of long-term monitoring data is described below and the results are presented in Appendix A where various derivative quantities such as long-term averages and standard deviations are tabulated and the bases for formulating the variability factors applicable to each subcategory are explained in detail.

For each nonexcluded subcategory, a step by step presentation of the logic used to develop effluent limitations is given, based on performance estimates for 30-day average concentrations for specific pollutants. When available, these concentrations are based on industry monitoring data. When long-term data are not available from industry, as is the case with most toxic pollutants, achievable concentrations are based on the treatability of these pollutants as discussed in Section 8 and summarized in Table 8-11.

Variability factors applied to these concentrations for the development of monthly average and daily maximum limitations are based on statistical analysis of long-term data as presented below and in Appendix A. In many cases, due to the limited amount of long-term data available, variability factors observed in one subcategory are applied in other subcategories where similar treatment technologies are practiced.

TABLE 8-11. ESTIMATED ACHIEVABLE MAXIMUM 30-DAY AVERAGES FOR THE APPLIED TECHNOLOGIES

	Final Concentrations (mg/l)						
	Lime Settling	Lime Filter	Sulfide Filter	Ferrite Coprecip-itation Filter	Soda Ash Settling	Soda Ash Filter	Alum
Antimony, Sb	0.8-1.5	0.4-0.8					
Arsenic V	0.5-1.0	0.5-1.0	0.05-0.1				
Beryllium, Be	0.1-0.5	0.01-0.1					
Cadmium, Cd	0.1-0.5	0.05-0.1	0.01-0.1	<0.05			
Copper, Cu	0.5-1.0	0.4-0.7	0.05-0.5	<0.05			
Chromium III, Cr^{+3}	0.1-0.5	0.05-0.5		0.01			
Lead, Pb	0.3-1.6	0.05-0.6	0.05-0.4	0.20	0.4-0.8	0.1-0.6	
Mercury II, Hg			0.01-0.05	<0.01			
Nickel, Ni	0.2-1.5	0.1-0.5	0.05-0.5				
Silver, Ag	0.4-0.8	0.2-0.4	0.05-0.2				
Selenium, Se	0.2-1.0	0.1-0.5					
Thallium, Tl	0.2-1.0	0.1-0.5					0.2-0.5
Zinc, Zn	0.5-1.5	0.4-1.2	0.02-1.2	0.02-0.5			

(continued)

TABLE 8-11 continued

	Final Concentrations (mg/l)					
	Ferric Chloride	Activated Carbon	SO_2 Reduction	Bisulfite Reduction	Lime/$FeCl_2$ Filter	Alkaline Chlorination
Arsenic V, As	0.05-0.5	0.3			0.02-0.1	
Chromium VI, Cr^{+6}		0.1	0.01-0.1	0.05-0.5		
Mercury II, Hg		0.01				
Silver, Ag	0.05-0.1					
Selenium, Se	0.05-0.1					
Thallium, Tl	0.7					
Cyanide (Free), CN_A						0.1-0.5

8.2 THE USE OF HISTORICAL POLLUTANT DATA

8.2.1 Determination of Limitation Guidelines Based Upon Historical Performance

In cases where there has been long-term monitoring of the pollution levels in the effluent stream discharged by a plant, it is possible to assess in-plant treatment performance through analysis of historical data that has been collected for this purpose. The appropriateness of standards constructed from data collected from a single plant performance is, of course, dependent on the plant's current performance in relation to the performance of other plants in the manufacturing subcategory. As economically feasible alternative waste treatment technologies become available, pollutant discharge guidelines need to be reviewed and revised to reflect these advances.

Statistical analysis of historical monitoring data is required to assess a plant's ability to discharge within set guidelines. To perform this analysis certain assumptions must be made regarding the nature of applicable statistical or probabilistic models, the constancy of the operation of the treatment facility, and the quality of the monitoring methods.

The statistical analyses contained in this development document belong to either of two principal types: those for daily observations of pollutant concentrations, and the others for 30-day average pollutant levels.

Tables in Appendix A provide a summary of traditional descriptive measures, i.e., number of observations(No), mimima(Min), arithmetic average(Avg), maxima(Max), and coefficient of variation(CV). In addition, a descriptive statistic, the variability factor, pertinent to the development of performance standards for pollution monitoring, is included. These tables, prepared for both daily measurements as well as 30-day averages, are statistical summaries derived from data offered by industry in response to Section 308 Questionnaires. Data in these tables are representative of currently achieved pollutant discharge performance levels in the several plants presented.

Formulation of variability factors to be used in determination of limitation guidelines based upon historical performance was accomplished by employing standard statistical analysis of the data resulting from long-term monitoring of effluent stream discharges of plants in the inorganic chemical manufacturing subcategory. In the following paragraphs are presented details of the theory and derivation of these statistical procedures, and of the resulting formulae which

relate variability factors to estimated long-term parameter averages, standard deviations, coefficients of variation, and "Z-values" computed from the normal probability distribution. These details are given both for the analysis applying to daily maxima criterion and for that applying to 30-day averages.

The term "variability factor" is used in referring to the multiple of the long-term average which is used in formulating performance standards. This factor allows for variation in pollution level measurements due to sampling error, measurement error, fluctuations in the amount of the pollutant in raw materials, and other process variations.

In the recording of actual data, as reported by industrial point sources in their responses to 308 Questionnaires, certain data values were entered as "less than" detectability limits. In these cases, the sample of monitoring data has been "censored" in the process of data recording since only the threshold value has been retained (i.e., if a pollutant concentration was reported as <0.050 mg/l, the values of 0.050 mg/l was used). In the statistical analysis of monitoring data, censored values were included with measured values in the sample. This practice provides a reasonable approach, both for assessing industry's capability to perform and environmental concerns for valid pollutant limitations.

First, since censoring was done only for "less than" bounds, any bias from their inclusion would cause a slight increase in the long-term average, moderately affecting (in the direction on leniency toward industry) the estimate of long-term average pollution levels.

On the other hand, the use of censored values combined with measured values tends to reduce the variability slightly (or in the direction of less leniency toward industrial point sources). For illustration, if the sample consisted solely of censored values, the estimated long-term average might be shightly overstated. Nevertheless, the point source ought have no difficulty with the threshold or detectability limit as a performance guideline, since none of the historical data exceeded that limit.

5.2.2 Assumptions Concerning Daily Pollutant Level Measurements

In the formulation and calculation of the following performance standards, individual sample measurements of pollutant levels were assumed to follow the lognormal distribution, a well known and generally accepted statistical probability model used in pollution analyses. Under this assumption the logarithms of these measurements follow a normal probability model. It was also assumed that monitoring at a

given plant was conducted responsibly and in such a way that resulting measurements can be considered statistically independent and amenable to standard statistical procedures. A final assumption was that treatment facilities and monitoring techniques had remained substantially constant throughout the monitoring period.

As an indication of the appropriateness of this assumption, the following plot of the cumulative distribution of daily pollution concentration logarithms on normal probability paper is illustrated in Figure 8-1.

The linearity of the cumulative plot indicates the degree to which actual monitoring data are in agreement with the theoretical lognormal model for their distribution.

In addition, Figure 8-2, reproduced here from a report prepared by industry for consideration by EPA, also demonstrates the validity of the lognormal assumption for daily data.

In the analysis of daily data, the inherent variability of measured pollutant levels in the effluent stream from inorganic chemical manufacturing processes must be incorporated in calculating upper limits for daily pollutant discharge levels. Even well treated and controlled plants may experience some days when an atypically high level of pollutant discharge is present in their waste stream. Such high variations may be due to a variety of factors, such as short-term maladjustments in treatment facilities, variation in flow or pollutant load, or changes in the influent stream. To allow for this variability, performance standards must necessarily be set above the plant's long-term average performance and occasional, infrequent excessive discharges permitted. Since pollutant discharge is often expressed in terms of average level, it is convenient to describe standards of performance and allow variability in term of multiples of this average. Such a method of computing standards as functions of multiples of average level performance is explained below. The ratio of the pollutant standard level to the estimated long-term average is commonly called the "variability factor".

This factor is especially useful with lognormally distributed pollutant levels because its value is independent of the long-term average, depending only upon the day-to-day variability of the process and the expected number of excessive discharge periods. For a lognormal population, the variability factor (P/A), the performance standard P, and the long-term average A, are related by:

$$\ln(P/A) = S'(Z - S'/2)$$

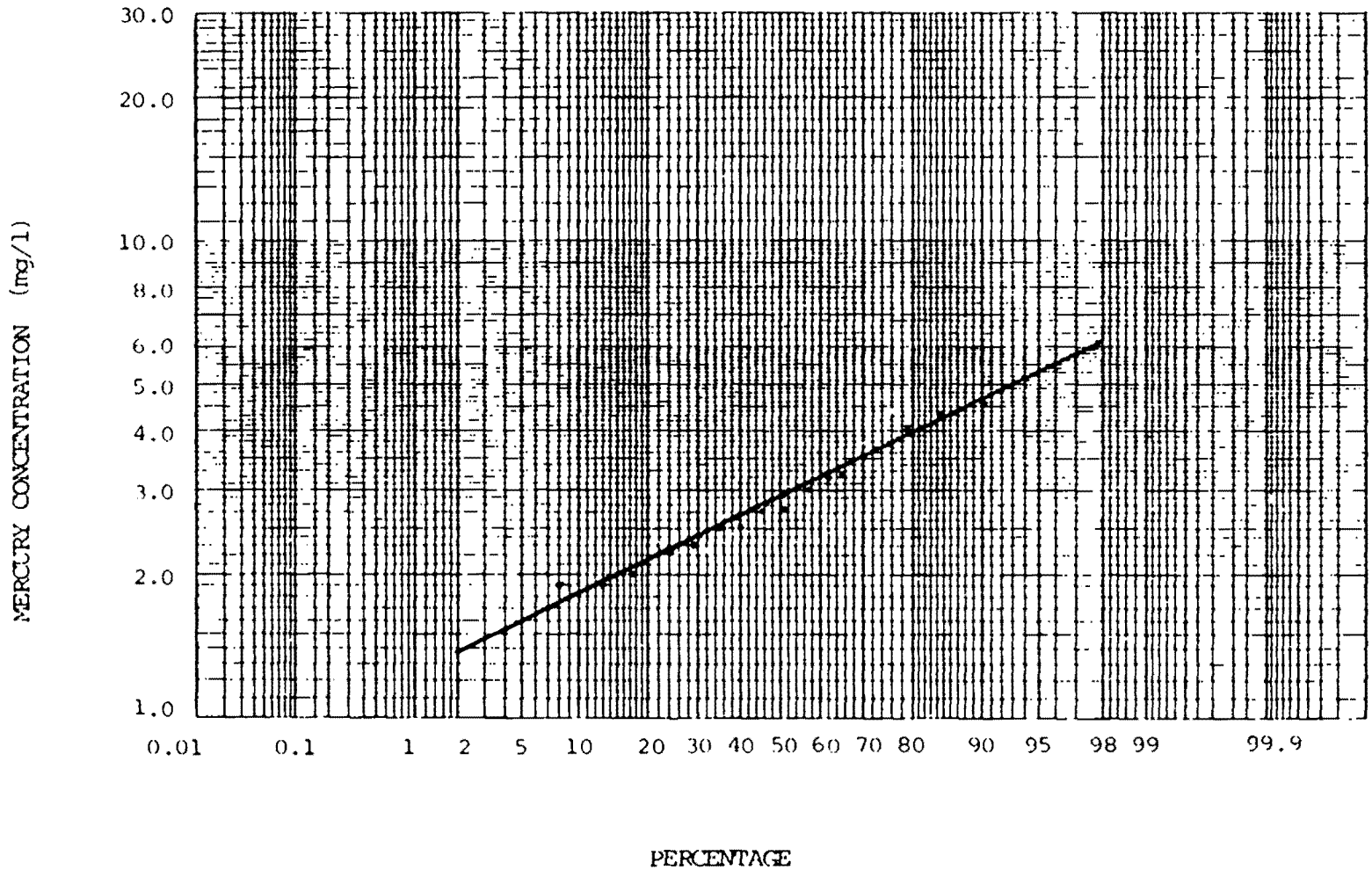

Figure 8-1. Cumulative distribution of daily concentrations of mercury in treated effluent from plant #251.

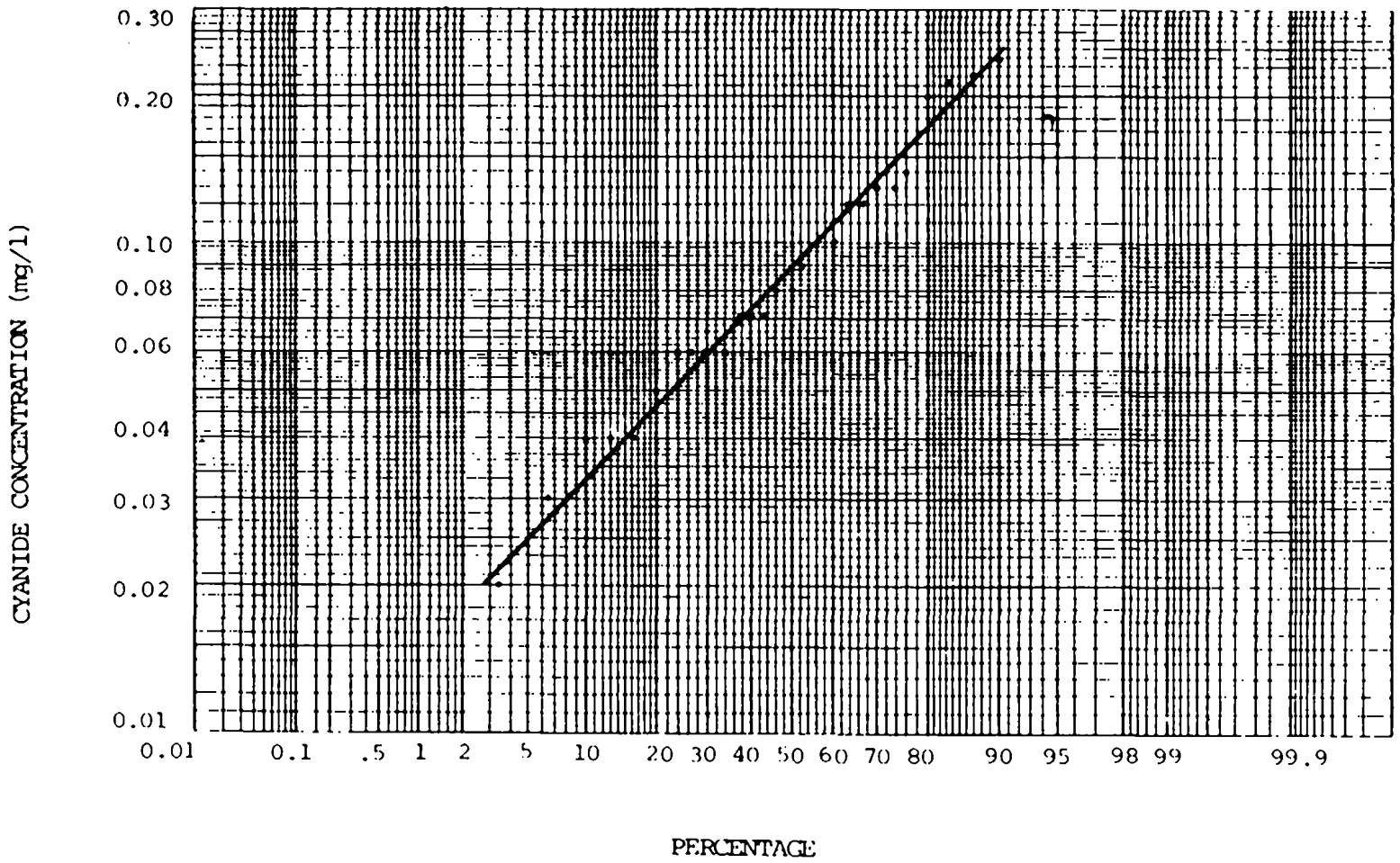

Figure 8-2. Cumulative distribution of daily concentrations of cyanide in treated effluent from plant #765.

where

1. "ln" represents the natural logarithm (base e) of a numerical quantity.

2. S' is the estimated standard deviation of the logarithms of pollutant level measurements. In the calculations which follow, S' is computed by the statistical procedure known as the "method of moments".

3. Z is a factor derived from the standard normal distribution. Z is chosen to give performance limitations which provide a balance between appropriate consideration of day to day variation in a properly operating plant and the necessity to insure that a plant is functioning properly.

The value of Z used for determining performance standards for daily measurements of pollutant concentration is chosen as Z=2.33. This Z-value corresponds to the 99th percentile of the lognormal distribution meaning that only 1 percent of the pollutant observations taken from a plant with proper operation of treatment facilities would be greater than the performance standard, P. This percentile is equivalent to allowing a plant in normal operation 3 to 4 exceedances per year.

Calculation of Variability Factors

As mentioned above, development of variability factors for daily pollution level measurements was based on the assumption that these data, (X1,X2,...Xn), follow a lognormal distribution. When this distribution is not a precise model, lognormally based procedures tend to somewhat overestimate variability and produce liberal standards which act to the benefit of permittees.

Following this assumption, if Yi=ln(Xi), where ln(Xi) represents the natural logarithm or log base e of the pollution measurement, then the Yi; i=1,2,...,n are each normally distributed. If A' and S' are the mean and standard deviation of Y=ln(X) respectively, then the probability is k percent that an individual Y will not exceed A'+ZS', where Z is the k-th percentile of the standard normal distribution, e.g. Z=2.33 is the 99-th percentile of the standard normal distribution. It follows that A'+ZS' is the natural logarithm of the k-th percentile of X and that the probability is k percent that X will not exceed a performance standard P= exp(A'+ZS'). It is also known that the average value of X is A= exp(A'+S'(S'/2)). The variability factor VF, is obtained by dividing P by A, hence,

$$VF = P/A = \exp(S'(Z - S'/2)), \text{ and}$$

$$\ln(VF) = \ln(P/A) = S'(Z - S'/2)$$

To estimate the VF for a particular set of monitoring data, where the method of moments is used, S' is calculated as the square root of $\ln(1.0 + (CV)^2)$, where the sample coefficient of variation, $CV = S/\bar{X}$, is the ratio of sample standard deviation to sample average.

Example Calculation of Variability Factors From Long-Term Data

Given the following descriptive statistics for a particular parameter, as might be found for lead (mg/l) in Appendix A.

No	Min	Avg	Max	CV
128	0.002	0.068	0.100	0.609

Calculate the estimated standard deviation of logarithms

$(S')^2 = \ln(1.0 + 0.609^2) = 0.315$

$S' = 0.56$

Then

$\ln(P/A) = 0.56(2.33 - 0.56/2) = 1.148$

The variability Factor VF is,

$VF = P/A = \exp(1.148) = 3.15$

The performance standard P;

$P = A(VF) = A(P/A) = (0.068)(3.15) = 0.214$

The statistical distributions relevant for the analysis of daily data are shown in Figure 8-3.

The statistical interpretation of P, the performance standard, is that one estimates that 99 percent (for the selected Z=2.33 value corresponding to the 99-th percentile) of the daily pollution level measurements will not exceed P. For large data sets, P is roughly equivalent to an upper 99 percent confidence bound for an individual daily measurement.

8.2.3 Assumptions Concerning 30-Day Average Pollutant Level Observation

While individual pollution level measurements should be assumed lognormally distributed, that assumption is not appropriate when analyzing 30-day averages. These averages generally are not distributed as lognormal quantities. However, for averages of daily (lognormal) measurements, a statistical

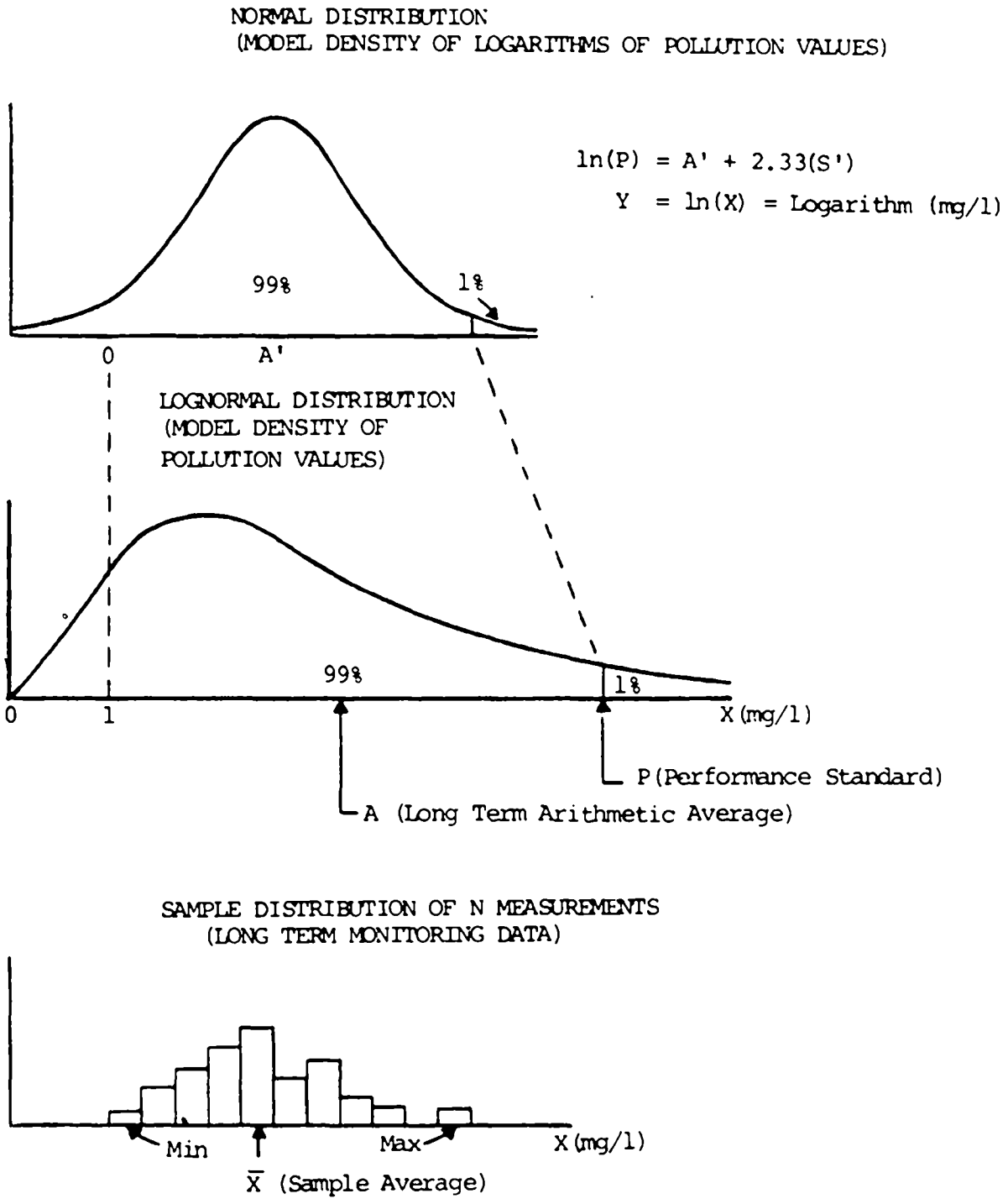

Note: (a) S' is estimated as $(S')^2 = [\ln(1 + CV^2)]$

$CV = S/\bar{X}$

$S^2 = \Sigma\ (X-\bar{X})^2/(N-1)$

$\bar{X} = \Sigma X/N$

Figure 8-3. Statistical distribution for daily pollution measurements.

principle, the "Central Limit Theorem", provides the basis for using the normal probability model. Therefore, the methods used in computing historical performance characteristics for 30-day averages differ from those used for daily samples. In this case, the sample coefficient of variation is the primary determinant of the variability factor, and there is no need to resort to logarithmic transformation. Examples of the appropriateness of this assumption is the cumulative distribution of 30-day averages shown in Figures 8-4 and 8-5. A straight line plot here on normal probability paper indicates validity of this model.

Under these conditions, the 30-day average values ($\bar{X}1$, $\bar{X}2$, ... $\bar{X}m$), for m months behave approximately as random data from a normal distribution with mean A and standard deviation S". Therefore, the probability is k percent that a monthly average $\bar{X}$ will not exceed the performance standard P, where

$$P = A + Z(S")$$

The variability factor is

$$VF = P/A = 1.0 + Z(S"/A)$$ and will be estimated by

$$VF = 1.0 + Z(CV)$$

Where

1. Z is a factor derived form the standard normal distribution. If one wishes a performance standard based upon expecting 95 percent of monthly averages to be within guidelines, then Z=1.64 should be used.

2. CV is the estimated coefficient of variation of the 30-day averages and is computed by $S\bar{x}/\bar{\bar{X}}$, the ratio of standard error of sample means to overall or grand average of monthly averages.

Calculation of Variability Factors

A sample calculation of 30-day average variablilty factor is shown below. The descriptive statistical data is for zinc (mg/l) from Appendix A.

No	Min	Avg	Max	CV
30	0.010	0.151	0.815	1.03

$$VF = 1 + Z(CV) = 1.0 + 1.64(1.03) = 2.69$$

$$P = A(VF) = (0.151)(2.69) = 0.406$$

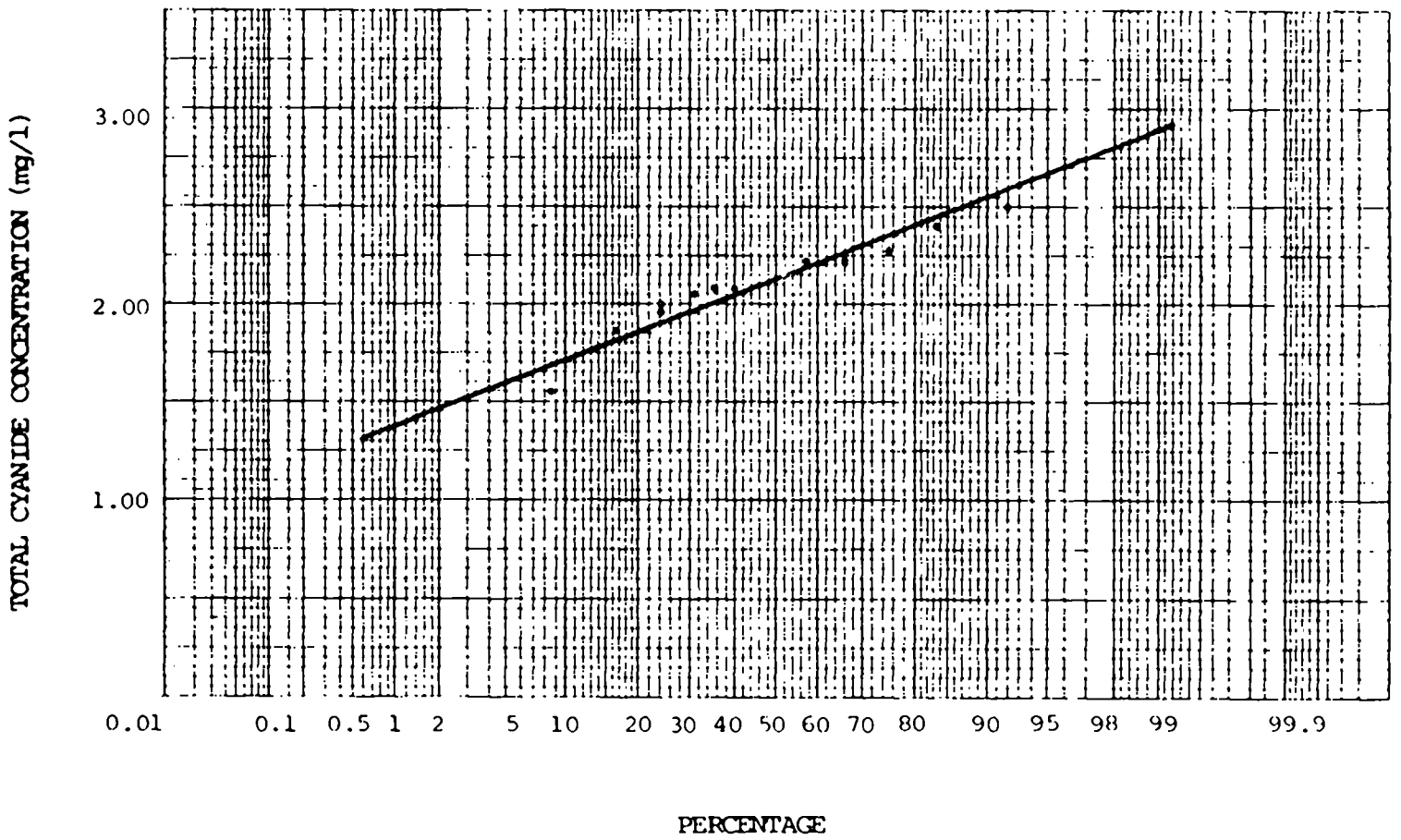

Figure 8-4. Cumulative distribution of 30-day averages of total cyanide in treated effluent from plant #782.

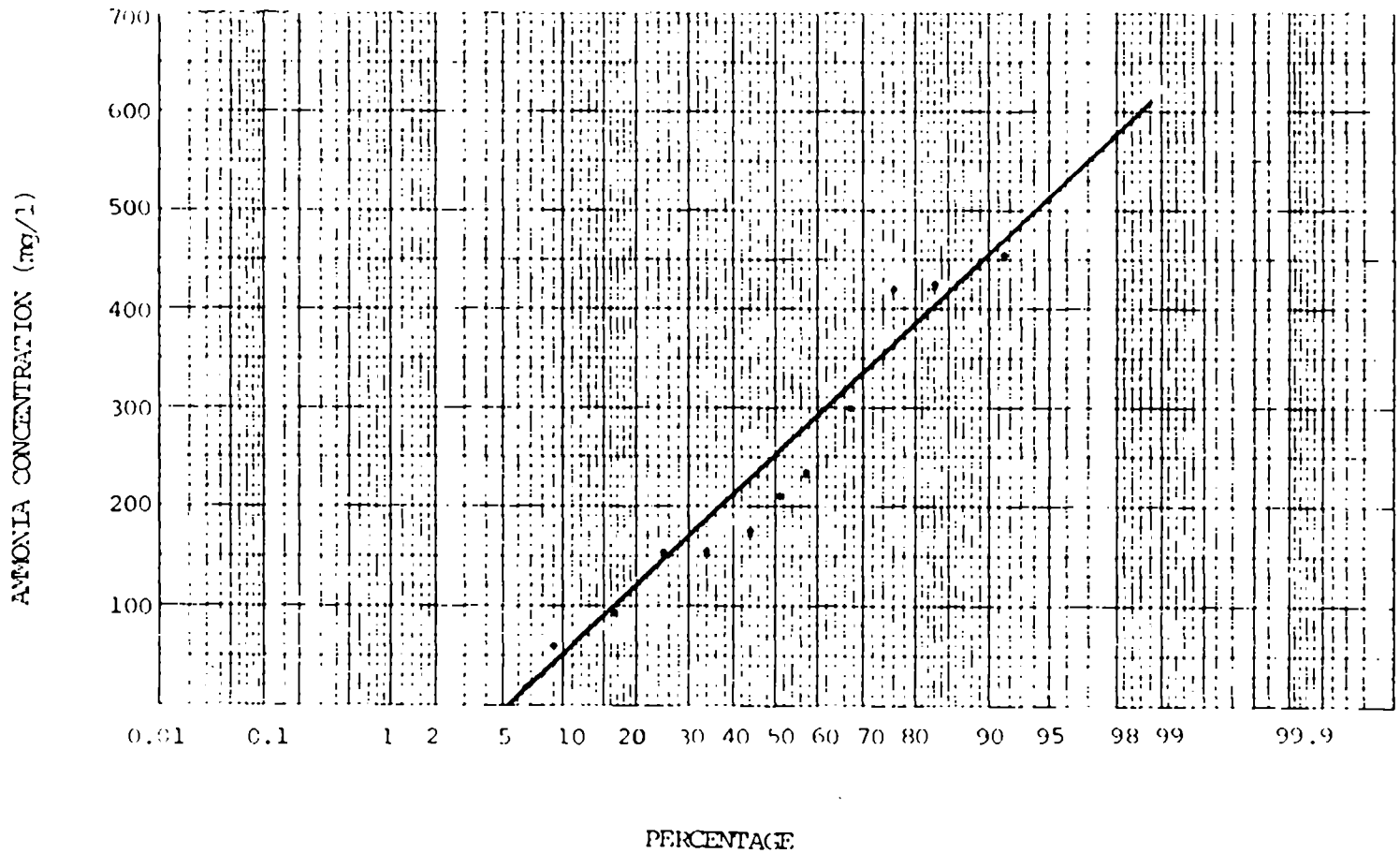

Figure 8-5. Cumulative distribution of 30-day averages of ammonia in treated effluent from plant #782.

Given the previous descriptive statistics for a particular sample, one obtains the performance standard P, by multiplying the mean of the 30-day averages in the data set by VF. An appropriate statistical interpretation is that, for the selected value of Z=1.64 corresponding to the 95th percentile of a normal distribution, one estimates that 95 percent of the 30-day average pollution level measurements will not exceed P.

Figure 8-6 shows the relationship between the normal probability model and frequency distribution of set of 30-day averages.

NORMAL DISTRIBUTION
(MODEL DENSITY OF 30-DAY AVERAGE POLLUTION MEASUREMENTS)

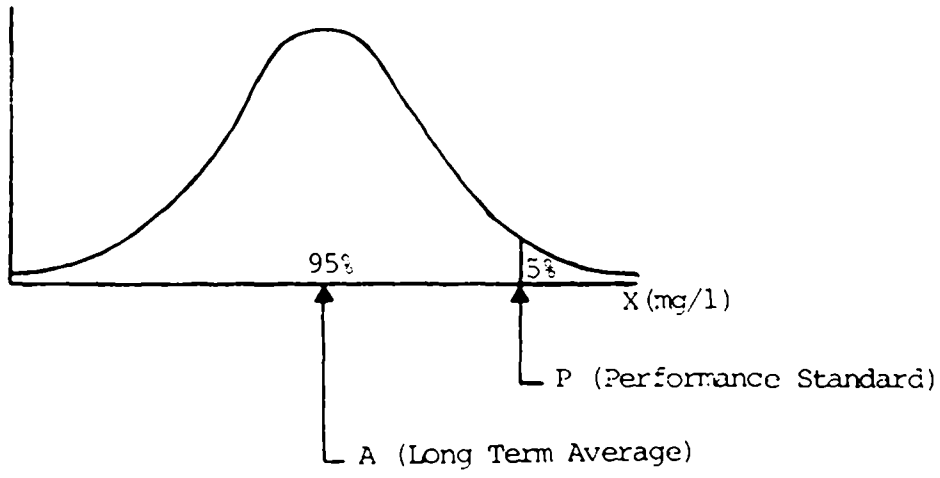

SAMPLE DISTRIBUTION OF M MONTHLY AVERAGES
(LONG TERM MONITORING DATA)

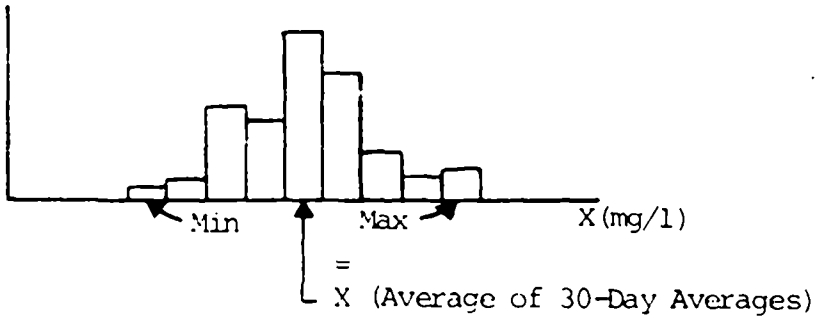

Note: (a) $P/A = 1+1.64(CV)$

$$CV = S_{\bar{X}} / \bar{\bar{X}}$$

$$(S_{\bar{X}})^2 = (\Sigma\ (\bar{X}-\bar{\bar{X}})/(M-1))$$

$$\bar{\bar{X}} = \Sigma\ \bar{X}/M$$

Figure 8-6. Statistical distributions for 30-day average pollution measurements.

SECTION 9

TREATMENT TECHNOLOGY APPLICATIONS FOR TOXIC POLLUTANT REMOVAL

9.1 SELECTION OF POLLUTANTS TO BE CONTROLLED

In order to determine which toxic pollutants, if any, may require effluent limitations, the pollutants observed in each subcategory were evaluated with regard to their treatability and potential environmental significance on the basis of the raw waste concentrations and mass loadings found during screening and verification. In an attempt to prioritize the need for regulation the toxic metals were divided into two groups:

Group 1 - Those metals which appear at concentration levels that are readily treatable using available technology and which have environmentally significant mass emission rates.

Group 2 - Potentially significant metals observed in the subcategory. These include toxic metals which exist at concentrations below the minimum treatability limit and above the minimum detection level.

Table 9-1 presents the significant toxic pollutant metals found in each group. In general, those metals occurring in the first group are of prime concern and may require regulation, while those occurring in the second group are of somewhat less concern and are not expected to require regulation.

9.2 APPLICATION OF ADVANCE LEVEL TREATMENT AND CONTROL ALTERNATIVES

9.2.1 General Design Objectives

Beginning with Section 11 of this document, the selection and application of toxic pollutant treatment and control

TABLE 9-1. PRIORITIZATION OF TOXIC METALS FOUND IN EACH SUBCATEGORY

SUBCATEGORY	Group 1 (1)	Group 2 (2)
Chlorine-diaphragm cell	Chromium Copper Lead Nickel Zinc	Antimony Arsenic Cadmium Mercury Selenium Thallium
Chlorine-mercury cell	Arsenic Cadmium Copper Lead Mercury Nickel Silver Zinc	Antimony Chromium Thallium
Hydrofluoric Acid	Antimony Chromium Copper Lead Nickel Zinc	Arsenic Cadmium Mercury Selenium Thallium
Titanium Dioxide - Chloride Process	Chromium	Lead Nickel Zinc
Titanium Dioxide - Sulfate Process and Chloride Ilmenite Process	Antimony Arsenic Cadmium Chromium Copper Lead Nickel Zinc	Selenium Thallium

(1) Group 1 - dominant raw waste pollutants selected as control parameters for the proposed effluent limitations.

(2) Group 2 - secondary raw waste pollutants found less frequently and at lower concentrations. These pollutants have not been selected as control parameters but are expected to receive adequate treatment as a result of the proposed effluent limitations on the Group 1 pollutants.

(continued)

TABLE 9-1 - continued

SUBCATEGORY	Group 1	Group 2
Aluminum Fluoride	Copper Nickel	Arsenic Cadmium Chromium Mercury Zinc
Chrome Pigments	Antimony Cadmium Chromium Cyanide Lead Nickel Zinc	Cyanide Mercury
Hydrogen Cyanide	Cyanide	
Sodium Dichromate	Chromium Nickel Zinc	Copper Selenium Silver
Copper Sulfate	Antimony Arsenic Cadmium Chromium Copper Lead Nickel Selenium Zinc	
Nickel Sulfate	Antimony Chromium Copper Lead Nickel Zinc	Arsenic Cadmium Mercury Selenium Thallium
Sodium Bisulfite	Chromium Copper Lead Nickel Zinc	Antimony Cadmium Mercury
Sodium Hydrosulfite Formate Process	Chromium Lead Nickel Zinc	Copper Pentachlorophenol Phenol

technology for model plant systems for each of the subcategories proposed for regulation are described. Several levels of treatment are proposed. Level 1 represents existing BPT treatment systems and the advanced levels (Level 2, 3, etc.) are the selected technologies for step-wise improvements in toxic pollutant removal over that achieved by the BPT system. Flow diagrams show BPT components as a starting point for advanced level treatment additions and incremental cost estimates.

For both existing and new sources, the advanced level technology options are selected as candidates for BAT with toxic pollutant removal as the primary objective. Although the advanced level systems chosen also give improved performance over the Level 1 (BPT) systems for the removal of conventional and nonconventional pollutants, this is regarded as a secondary design objective.

9.2.2 Pretreatment Technology

Since untreated heavy metal ions will usually pass through the treatment provided in a typical POTW, or will be precipitated with the POTW solid residue, pretreatment of wastes containing significant amounts of heavy metals is necessary. As a general rule, alkaline precipitation, followed by settling and removal of the solids will suffice. In certain subcategories, such as the chlorine industry, specific treatment will be required for highly critical constituents (mercury, lead, chlorinated organics and asbestos). Normally the Level 2 model treatment processes shown in the following subsections will be appropriate for pretreatment prior to discharge to a POTW.

9.2.3 New Source Performance Standards

New Source Performance Standards are at least equal to BAT. In a few cases where new plants have the opportunity to design systems for better toxic removal performance without expensive retrofitting the higher technology systems have been used as a basis.

9.3 ESTIMATED ACHIEVABLE PERFORMANCE CHARACTERISTICS FOR ADVANCED LEVEL APPLICATIONS

Advanced level control and treatment alternatives for reduction of pollutant discharges and their applicability to each subcategory are presented in the sections dealing with individual products. With few exceptions, these alternatives were selected specifically for removal of priority pollutants and were designed for end-of-pipe treatment.

Treatment technologies practiced outside the industry are recommended when appropriate and, in most cases, apply to the removal of toxic pollutant metals. The estimated 30-day average treatability levels (Sections 8, Table 8-11), long-term data parameters, and the screening and verification results are all utilized in the development of estimated performance characteristics for the recommended treatment applications in each subcategory.

9.3.1 Advanced Level Removal of BPT Pollutants

Performance estimates for these systems, when possible, were based on effluent quality achieved at plants currently practicing these technologies. However, in most cases, the advanced levels are not currently being practiced within the specific subcategory of concern, and performance information from other appropriate sources is necessarily utilized.

When established waste water treatment practices, such as clarification or filtration, form a part of advanced treatment alternatives, the specified achievable effluent quality has been based on concentrations accepted as achievable through proper design and control. The prime example of this is suspended solids reduction by filtration.

9.3.2 Advanced Level Removal of Toxic Pollutants

Performance estimates for toxic pollutants were also based, when possible, on effluent quality achieved at plants currently practicing these technologies. However, in most subcategories, toxic pollutant analyses are not conducted unless a specific pollutant is regulated and requires monitoring. Where transfer of technology is applied as a treatment alternative, performance estimates for toxic pollutant removals were based on the demonstrated performances in other industries while incorporating allowances for specific differences in process waste characteristics and operating conditions. Statistically derived long-term monitoring data parameters were described in Section 8 and are compiled in tabular form in Appendix A. The screening and verification data are used to supplement the available long-term data applied to each subcategory. A judgment is made whether the screening and verification data represent a well-performing system or one which is not performing at its technological potential. For a well-performing system, the data are regarded as representative of 30-day averages and are compared with the estimated treatability ranges from Table 8-11, as well as the 30-day averages developed from the long-term data. In this manner, the performance estimates for each pollutant, at each treatment level for the nonexcluded subcategories, are developed and

presented in tabular summaries. By starting with the estimated achievable 30-day averages, the specific variability factor ratio derived for each pollutant is used to estimate the daily maximum values.

The model plant waste flow per unit of production is then taken to calculate the estimated mass emission values of the 30-day average and daily maximum limits for each pollutant to be controlled.

9.4 POLLUTION CONTROL PARAMETERS TO BE REGULATED

9.4.1 Conventional Pollutants

Waste water quality parameters which are identified as conventional pollutants include the following:

pH
Total Suspended Solids (TSS)
Biochemical Oxygen Demand, 5-Day (BOD-5)
Fecal Coliform
Oil and Grease

Only the first two parameters (pH and TSS) in this group have been selected for regulation in the Inorganic Chemicals Manufacturing Point Source Category. For direct dischargers, the pH range of 6 to 9 has been established as the general control limitation and the permissible frequency and duration of excursions beyond this range is to be specified in individual plant discharge permits. The limitations on TSS are specified for both BPCTCA and BATEA-based regulations, the former being largely a function of industry performance and the latter stemming from treatability estimates with the appropriate technologies.

9.4.2 Nonconventional Pollutants

The waste water quality parameters classified as nonconventional pollutants include the nontoxic metals such as Al, B, Ba, and Fe along with chemical oxygen demand (COD), total residual chlorine, fluoride, ammonia, nitrate, and "phenols," etc. Of these, only Fe, COD, total residual chlorine, fluoride, and ammonia are considered for regulation in the inorganic chemicals industry. Due to its toxicity, chlorine would be controlled in direct discharges, but would be excluded from control in pretreatment regulations. A similar argument is made for the control of ammonia. However, since many POTW's are only capable of about 20 percent ammonia removal, both direct discharge and pretreatment regulations would specify NH3 limitations. Similarly, the type of COD found in inorganic

chemical industry discharges is not amenable to biochemical oxidation in a POTW. In addition, compounds which contribute to the COD are likely to create odor and corrosion problems in sewer systems. Therefore, its control would also be retained in pretreatment regulations. Fluoride control is also required for both direct and indirect discharges largely because the most practical technology for fluoride removal (precipitation as CaF_2) must be applied to relatively concentrated waste water sources. This treatment method achieves removal levels which at best are still unacceptable for direct municipal or agricultural water uses. POTW's are not effective for fluoride removal and unless sufficient dilution occurs prior to the reuse of the water, special techniques (e.g., adsorption on activated alumina) would have to be applied for further fluoride removal.

9.4.3 Toxic Pollutants

The toxic pollutants found at significant levels during screening and verification are listed by subcategory in Table 9-1. Out of these, toxic pollutant control parameters were selected largely on the basis of treatability. Since several toxic pollutants may be controlled by a common treatment technology, it is possible to select one or more control parameters which will act as a surrogate for others exhibiting the same treatability characteristics. Treatment system operating conditions would normally be optimized for the removal of the specified control parameters which would be monitored on a regular basis. The other toxic pollutants would be monitored much less frequently as a periodic check of the effectiveness of surrogate control.

The following toxic pollutants have been designated as control parameters in this point source category:

Cadmium
Chromium (Total)
Copper
Cyanide (amenable to chlorination)
Lead
Mercury
Nickel
Selenium
Zinc

The specific control parameters selected for each subcategory are presented in the tables entitled "Control Parameter Limitations" in the sections of this report dealing with the individual industries. Some general comments about them are given here.

The most common technology applied in industry for the removal of chromium from waste waters involves a reduction step, whereby Cr (VI) in solution is converted to the less toxic Cr (III) form which can then be removed by alkaline precipitation. The efficiency of this treatment depends upon the presence of excess reducing agent and pH control to drive the reduction step to completion. When treated effluent samples are taken to monitor residual Cr (VI) and total chromium levels, the analytical results for Cr (VI) are subject to several factors which adversely affect the accuracy and reproducibility of the diphenylcarbazide (DPC) colorometric method. The problem is not so much one of analytical interferences with the Cr (VI) - DPC color development, but rather the actual changes in Cr (VI) concentration that can take place during sampling, sample preservation and storage, and analysis. The major cause of such changes is the presence of excess reducing agent in the treated effluent. This tends to give false low readings for Cr (VI) although in some cases the opposite may occur as a result of sample preservation and storage under acidic oxidizing conditions.

Thus, in view of the questionable reliability of the presently accepted Cr (VI) monitoring procedure, total chromium, Cr (T), is recommended as the control parameter to be used in the inorganic chemicals industry. The adequacy of Cr (T) as a control parameter is predicated on its effectiveness as a surrogate for Cr (VI) control. Since the concentration of Cr (T) represents the summation of all forms of chromium normally found in solution or suspension including Cr (VI), the final concentration of Cr (T) in a treated effluent is dependent on the effectiveness of both the reduction and the alkaline precipitation steps. In this way, the use of Cr (T) as the control parameter assures that adequate removal of Cr (VI) is being achieved as a direct consequence of the treatment technology required.

Special consideration is given to the control of copper which may enter a POTW. At high enough concentrations, copper may impose toxicity effects on the microorganisms in a POTW and may accumulate in municipal sludges rendering them unusable for certain land applications. Thus, copper may be designated as a control parameter for pretreatment even though it may not be so designated for direct discharges.

SECTION 10

COST OF TREATMENT AND CONTROL SYSTEMS

10.1 INTRODUCTION

10.1.1 Purpose of Cost Data

More complex treatment methods and higher levels of pollutant removal are reflected in increased costs of equipment, energy, labor and chemicals. At some point, the increasing costs of treatment will outweigh the benefits of such treatment. Therefore, it is important that for each subcategory the Agency know the base cost and the incremental costs of each level of treatment which it might prescribe. These "options" of internal costs, which are the industry's annual costs of providing the necessary waste treatment, will result in related increases in product costs, which are termed external costs. Thus annual costs of waste treatment are expressed in terms of dollars per unit of annual production of the principal product.

Because plant visits revealed very few treatment plants serving a single product manufacturing line, it was not feasible to seek actual waste treatment facilities which could serve as real models for estimating purposes. Accordingly, the cost data were taken from similar construction projects by the contractor, and from unit process equipment costs assembled from vendors and other commercial sources. Because the model costs apply to a wide range of climate, material sources and labor conditions, they should be considered as preliminary estimates within plus or minus 15 to 25 percent.

Actual costs incurred by individual plants may be more or less than the presented model plant costs. The major causes of variability are:

1. Waste water treatment combined with the treatment of other product effluents.

2. Site dependent conditions, as reflected in piping lengths, climate, land availability, water and power

supply and the location of the points of final discharge and solids disposal.

3. Material (reagent) costs, due to variation in availability and distance from the source.

The construction costs are based on the Engineering News Record Construction Index for July 1978 (ENRCI=2800), and other costs are expressed in mid-1978 dollars.

10.1.2 General Approach

Since few single product waste treatment plants were available for detailed study, the costs presented in this section are based on model plants which closely resemble the types and capacities of waste treatment facilities needed for each separate product subcategory. The model plant selections are based on review of Section 308 Questionnaire responses, plant visits, development documents, contacts with the industries to verify treatment practices and to obtain data on size, waste water flow, and solid waste disposal systems. Thus, each model is synthesized from actual data as a typical plant in its subcategory with a level of waste treatment equivalent to BPT. Variations in treatment plant capacity are accounted for by selecting sets of models which represent the range of existing production plant capacities in the subcategory; large, medium and small. Thus the model plants are not set up as exemplary plants, but as typical plants of adequate design which represent the range of plants and treatment facilities found in the subcategory.

10.1.3 Cost References and Rationale

Cost information contained in this report was obtained directly from industry, engineering firms, equipment suppliers and current experience of the contractor. Whenever possible, costs are based on actual industrial installations or engineering estimates for projected facilities as supplied by industries consulted during the study. In the absence of such information, cost estimates have been developed from either current costs for similar waste treatment installations at plants making other inorganic chemicals or from general cost estimates for specific treatment technologies.

Treatment costs are based on model production plant characteristics which determine the treatment processes selected for each operation. Under set effluent limitations, treatment costs are primarily functions of the pollutant load (i.e., kg/kkg of product), waste water flow rate (i.e., cubic meters/day). Available data indicate that both pollutant loads

and flow rates can vary significantly among plants manufacturing the same product.

10.1.4 Definition of Levels of Treatment and Control Cost Development

For the purpose of establishing the base level treatment costs, each industry is assumed to be practicing Best Practicable Control Technology Currently Available (BPT), which the EPA Effluent Limitations Guidelines required by 1977 for certain pollutants (conventional and nonconventional, as well as some of the toxic pollutants) specified for each subcategory. The investment costs and annual costs of such BPT systems are shown in this report as the base level or Level 1. This level of treatment may also provide incidental removal of additional toxic pollutants not previously specified in the regulations.

The advanced treatment levels (Level 2, Level 3, etc.) are aimed primarily at reduction of toxic pollutants to levels considered acceptable for July 1, 1984, performance, utilizing Best Available Technology Economically Achievable (BAT) at incremental investment and annual costs beyond those shown for Level 1. For example, for Level 3 treatment, the incremental cost as given in the table is directly added to base or 1st Level cost to obtain the total cost of the treatment system. The addition of the Level 2 incremental cost is not required to obtain the Level 3 total. The waste water treatment flow diagrams for Levels 2, 3, etc., as given in this report, include the flow diagram for base or Level 1 of treatment.

10.1.5 Treatment and Disposal Rationale Applied to Cost Development

The following assumptions are employed in the cost development:

1. Noncontact cooling water generally is excluded from treatment (and treatment costs) provided that no pollutants are introduced.

2. Water treatment, cooling tower and boiler blowdown discharges are not considered process waste water unless such flows contain significant amounts of pollutants.

3. Sanitary sewage flow is excluded.

4. The plants are assumed to operate 24-hours per day, 350 days a year, except where otherwise noted.

5. Manufacturing plants are assumed to be single product plants.

6. The inorganic chemical industry extensively uses in-plant control techniques such as in-process abatement measures, housekeeping practices, and recycling of process waste waters to recover valuable materials or use these materials as feed for other by-products. Segregation of uncontaminated cooling and other waters prior to treatment and/or disposal, and other similar measures can contribute to waste load reduction. All such costs have not been included in the cost estimates.

7. Excluded from the estimates are any costs associated with permits, reports or hearings required by regulatory agencies.

13.1.6 Expression of Costs

Investment costs for Level 1 treatment systems are expressed in mid-1978 dollars to construct base level facilities for each single product manufacturing subcategory at various production rates.

Similarly, operation, maintenance and amortization of the investment are expressed as base level annual costs for Level 1 and as incremental annual costs for Level 2 and above. Where a single product plant produces more than one waste stream requiring treatment, the respective investment and annual costs are the combined costs of all treatment.

Total annual costs per metric ton of product are shown in the summaries for each product subcategory.

Direct Investment Costs for Land and Facilities

Types of direct investment costs for waste treatment facilities and criteria for estimating major components of the model plants are contained in the following subsections:

Construction costs - Construction costs include site preparation, grading, enclosures, buildings, foundations, earthwork, roads, paving and concrete.

The costs of constructing lagoons can vary widely, depending on local topographic and soil conditions. The required areas of lagoons and settling ponds and their consequent costs are developed as a function of volume (capacity). It is assumed that reasonably level sites are available, consisting of sandy loam with high clay content and no large rocks or rock formations. It is assumed that two rectangular lagoons are furnished in parallel, with one common dike to permit alternate dewatering for sludge removal by

the clamshell method. Using balanced cuts and fills, earth dikes with 2:1 slopes provide liquid depths from three to five meters. Earth moving costs are significantly affected by site conditions and quantities. To express these variations for a range of sizes at three depths, the cost of clearing, excavation, dewatering, compaction, finish grading, riprap and associated indirect expenses for earthen lagoons were plotted against liquid volume. Piping, valving and dike roads not included are added separately in the cost summaries. Lagoons are unlined unless the contents are highly pollutional or acidic. The liner material employed for impervious lagoons is Hypalon. The installed cost of the liner is $11.00 per square meter ($9.20 per square yard), which includes the trenching and backfilling necessary for anchoring the liner. In some subcategories, clay lining has been used in place of Hypalon at a cost of $5.40 per square meter ($0.50 per square foot).

Costs of buildings may vary from $25.00 to $45.00 per square foot. For the purpose of this study, building cost is estimated at $377.00 per square meter ($35.00 per square foot).

Concrete construction for miscellaneous work varies from $260.00 to $785.00 per cubic meter ($200.00 to $600.00 per cubic yard). For foundations and flat slabs, concrete has been estimated at $395.00 per cubic meter ($300.00 per cubic yard) in place. Asphalt paving which has been used on lagoon dikes and for miscellaneous roads, is installed at a cost of $9.70 per square meter ($0.90 per square foot). A width of three meters is generally assumed.

Equipment costs - Depending upon the method of treatment, equipment for waste water treatment consists of a combination of items such as pumps, aerators, chemical feed systems, agitators, flocculant feed systems, tanks, clarifiers, thickeners, filters, etc. Cost tables for these items were developed from vendors' quotations on a range of sizes, capacities and motor horsepowers. Except for large size tanks and chemical storage bins, the cost represents packaged, factory-assembled units. Mechanical components are generally skid mounted, prepiped and prewired; and include associated pumps, meters and instrumentation. Critical equipment is assumed to be installed in a weatherproof structure. Chemical storage, feeders and feedback equipment include such items as probes, instruments, controls, transmitters, valves, dust filters and accessories. Bulk chemical storage bins are designed to hold a standard bulk truck load, plus five days needs, between ordering and delivery. Critical pumps are furnished in duplicate and when clarifiers are used, the flow is split between two units, permitting one to be bypassed for repairs. Single units are used for small flows, batch treatment and intermittent service.

Installation cost - Installation is defined to include all services, activities, and miscellaneous material necessary to implement the described waste water treatment and control systems, including piping, fittings, and electrical work. Many factors can impact the cost of installing equipment modules. These include wage rates, manpower availability, whether the job is performed by outside contractors or regular employees, new construction versus modification of existing systems, and site-dependent conditions (e.g., the availability of sufficient electrical service). In these estimates, installation costs were chosen for each application, based upon average site conditions and considering the complexity of the system being installed. An appropriate cost is allowed for interconnecting piping, power circuits and controls.

Monitoring equipment - In this report, it is assumed that monitoring equipment will be installed at the treated effluent discharge point. It will consist of an indicating, integrating and recording type flow meter, pH meter with sensor and recorder, alarms and controls and an automatic sampler.

Land - Land availability and cost of land can vary significantly, depending upon geographical location, degree of urbanization and the nature of adjacent development. Land for waste treatment, and in some cases for inert solids disposal, is assumed to be contiguous with the production plant site and reasonably convenient to a waterway which can receive permitted discharges of waste water. Where inert solids are retained at the plant site, enough land is included in the base level model plant investment cost to accept residual solids for a normal operating period of ten years at the same production rate for which the plant is sized. For the purpose of this report, land for lagoons, treatment facilities and on-site residual waste disposal is valued at $30,000 per hectare ($12,000 per acre).

Investment costs for supporting services - Engineering design and inspection are typical services necessary to bring a project from a concept to an operating system. Such services broadly include laboratory and pilot plant work to establish design parameters, site surveys to fix elevations and plant layout, foundation and groundwater investigations, and operating instructions; in addition to design plans, specifications and inspection during construction. These costs, which vary with job conditions, are often estimated as percentages of construction cost, with typical ranges as follows:

Preliminary survey and construction surveying	1 to 2%
Soils and groundwater investigation	1 to 2%

Laboratory and pilot process work	2 to 4%
Engineering design and specifications	7 to 12%
Inspection during construction	2 to 3%
Operation and maintenance manual	1 to 2%

From these totals of 14 percent to 25 percent, a mid-value of 20 percent of in-place construction (installed equipment and construction) costs has been used in this study to represent the engineering and design costs applied to model plant cost estimates.

The contractor's fee and contingency, usually expressed as a percentage of in-place construction costs, includes such general items as temporary utilities, small tools, dewatering, field office overhead and administrative expense. The contractor is entitled to a reasonable profit on his activities and to the cost of interest on capital tied up during construction. Although not all of the above costs will be incurred on every job, an additional 20 percent of the in-place construction costs has been used to cover related costs broadly described as contractor's fees, incidentals, overhead and contingencies.

Operation and Maintenance Costs

Annual operation and maintenace costs are described and calculated as follows:

Labor and supervision costs - Plant operations are assumed to be conducted 24-hours per day 350 days per year, with attendance for only part of each working day. For batch waste water treatments systems adjustment are made for the number of working days in a year. Personnel costs are based on an hourly rate of $20.00. This includes fringe benefits and an allocated portion of costs for management, administration and supervision.

Personnel are assigned for specific activities as required by the complexity of the system, usually 4 to 12 hours per day.

Energy costs - Energy (electricity) costs are based on the cost of $306.00 per horsepower operating 24 hours per day and 350 days per year. For batch processes, appropriate adjustments are made to suit the production schedule. The cost per horsepower year is computed as follows:

$$Cy = 1.1\ (0.7457HP \times Hr \times Ckw)/(E \times P) \qquad 1)$$

where

Cy = Cost per year

HP = Total horsepower rating of motor (1 hp = 0.7457 kw)

E = Efficiency factor (0.9)

P = Power factor (1.00)

Hr = Annual operating hours (350 x 24 = 8400)

Ckw = Cost per kilowatt-hour of electricity ($0.040)

Note: The 1.1 factor in equation (1) represents allowance for incidental energy used such as lighting, etc.

It is assumed that no other forms of energy are used in the waste treatment system.

Chemicals - Prices for the chemicals were obtained from vendors and the Chemical Marketing Reporter. Unit costs of common chemicals delivered to the plant site are based on commercial grade of the strengths or active ingredient percentages as follows:

Hydrated Lime (Calcium Hyroxide)	Bulk	$ 80/metric ton
	Bag	$ 85/metric ton
Quicklime	Bulk	$ 70/metric ton
Ground Limestone		$ 13.20/metric ton
Soda Ash (58% Bulk)		$ 85/metric ton
Caustic Soda (58% NaOH)		$200/metric ton
Sodium Sulfide (60-62%)		$435/metric ton
Sulfuric Acid		$ 75/metric ton
Hydrochloric Acid (32%)		$ 70/metric ton
Aluminum Sulfate (56% Alumina)		$250/metric ton
Flocculant (Polymer)		$2.00/kg
Sulfur Dioxide (Ton Containers)		$335/metric ton

Chlorine (ton Containers)	$220/metric ton
Sodium Bisulfide (72-74%)	$385/metric ton
Ferrous Sulfate	$ 70/metric ton
Diatomaceous Earth	$ 0.30/kg
Activated Carbon	$ 2.00/kg

Maintenance - The annual cost of maintenance is estimated as 10 percent of the investment cost, exluding land.

Taxes and insurance - An annual provision of three percent of the total investment cost has been included for taxes and insurance.

Residual waste disposal - Sludge disposal costs can vary widely. Chief cost determinants include the amount and type of waste, and the choice of either on-site disposal or contract hauling which depends on the size of the disposal operation and transport distances. Off-site hauling and disposal costs are taken as $13.00 per cubic meter ($10.00 per cubic yard) for bulk hauling, with appropriate increases for small quantities in steel containers. For on-site disposal from lagoons, a clamshell at $600.00 and front end loader at $300.00 per disposal day are used. For very large sludge quantities, lower unit costs have been assumed. The computed sludge quantities are spread on land valued at $12,000 per acre.

Monitoring, analysis and reporting - The manpower requirements covered by the annual labor and supervision costs include those activities associated with the operation and maintenance of monitoring instruments, recorders, and automatic samplers as well as the taking of periodic grab samples. Additional costs for analytical laboratory services have been estimated for each subcategory assuming that sampling takes place three times a week at the point of discharge and that an analytical cost of $20.00 per constituent is incurred. Approximately 10 percent of the total analytical cost has been added for quality control and water supply samples. Unless otherwise stated, continuous discharge is assumed and the analytical costs associated with compliance monitoring at the BPT level are based on the determination of four constituents. At the advanced (BAT) levels, the determination of six constituents is assumed. A reporting cost of $1,500 per year is added for clerical support. Monitoring costs for periodic batch treatments are reduced in proportion to the number of days per year when discharges occur.

Amortization

Annual depreciation and capital costs are computed as follows:

$$CA = B \times r(1+r)^n / \times (1+r)^n - 1 \qquad (2)$$

where

CA = Annual cost

B = Initial amount invested excluding cost of land

r = Annual interest rate (assumed 10%)

n = Useful life in years

The multiplier for B in equation (2) is often referred to as the capital recovery factor, and is 0.1627 for the assumed overall useful life of 10 years. No residual or salvage value is assumed.

Items Not Included in Cost Estimates

In some subcategories, a portion of the waste water is returned to process from an intermediate treatment step. In these cases, the costs of return piping and pumping are considered as water development and not as waste treatment. Costs for subsequent treatment are based on the remaining flow after diversion of the return-to-process flows.

Although specific plants may encounter extremes of climate, flood hazard and availability of water, the costs of model plants have been estimated for average conditions of temperature, drainage and natural resources. It is assumed that any necessary site drainage, roads, water development, security, environmental studies and permit costs are already included in production facilities costs. Therefore, the model costs are only for facilities, supplies and services directly related to the treatment and disposal of waterborne wastes, including land needed for treatment and on-site sludge disposal. Air pollution control equipment required by the Clean Air Act is not included.

Dust collectors normally associated with package treatment, chemical transfer and feeding systems are included. Raw wastes from various sources are assumed to be delivered to the treatment facility at sufficient head to fill the influent equalization basin, and final effluent is discharged by gravity. Costs of pumps, pipes lines etc., necessary to deliver raw waste water to the treatment plant or to deliver the treated effluent to the point of discharge are not included in the cost estimates.

Since the treatment models are designed to serve single product manufacturing plants, no emergency holding basins or internal bypasses are provided. Any such necessary facilities are more appropriately furnished as part of a combined waste treatment system serving several product lines.

10.2 COST ESTIMATES FOR EACH SUBCATEGORY

Estimated costs for the waste water treatment plants for the different annual productions and at various levels of treatment are calculated in terms of total annual costs. The total annual cost is the summation of the annual amortization of the investment costs and the annual operation and maintenance costs.

The types of costs shown for each model plant are:

(a) Investment

(b) Annual operation and maintenance

(c) Annual amortization of investment costs (excluding land)

The total annual costs per metric ton of product have been calculated.

For the purpose of the cost estimate, the first level of treatment represents the base cost of the treatment system (BPT). The other levels (second, third, etc.) represent the incremental cost above the base cost. The actual additional costs a plant would incur in implementing the described treatment processes depend on current treatment practices, and to some extent on the availability of land.

In some cases, land for economical on-site sludge disposal for a ten year period has been provided in the BPT model plant costs. Since land cost is not amortized, its value appears in the initial investment cost but not in the total annual costs. Where land is a major factor in the BPT estimated costs, its significance will be mentioned in the separate reviews of each subcategory.

For the purpose of cost estimating, a set of generally representative model plant specifications are given for each nonexcluded subcategory starting with the Chlor-Alkali industry in Section 11. These specifications, together with the basic assumptions on cost estimating detailed in this section, form

the basis for the baseline cost estimates for alternative treatment systems. These cost estimates are presented in a tabular format in the cost development portion of each applicable subcategory section. In order to take into account more fully the wide range of plant specific variables, additional cost elements which may add to the baseline costs are then considered on a case-by-case basis. The results are either expressed graphically as a cost envelope or are given as an estimated percentage factor to be applied to the baseline costs.

SECTION 11

CHLOR-ALKALI INDUSTRY

11.1 MERCURY CELL PROCESS INDUSTRY PROFILE

11.1.1 General Description

Chlorine and its co-product caustic soda (alkali) are used in large quantities in the production of plastics, organic and inorganic chemicals, in the pulp and paper industry, in water and waste water treatment and in a number of other industries.

The production rate in the United States is approximately 9 million metric tons (10 million short tons) of chlorine per year and over 95 percent of that production is by the electrolysis of a sodium or potassium chloride solution via one of two major processes. The two processes, mercury cell and diaphragm cell, differ in cell design and in the quantity and quality of waste water generated, and because of these difference they are being addressed separately under the Chlor-Alkali Subcategory.

Other processes for chlorine production such as the recently developed membrane process are not addressed here because only pilot-scale production exists or no data is available from fully operating facilities.

Approximately 30 percent of the U.S. production of chlorine is by mercury cell plants. Of 27 known plants, 308 data was available for 15. Table 11-1 presents a summary profile of the subcategory. Table 11-2 presents the current status of discharge regulations for mercury cell chlorine plants.

11.1.2 General Process Description and Raw Materials

Brine System

The sodium chloride solution (brine or salt dissolved in water) is treated with sodium carbonate and sodium hydroxide to precipitate impurities such as calcium, magnesium and iron. The precipitated hydroxides and carbonates are then settled

TABLE 11-1. SUBCATEGORY PROFILE DATA SUMMARY

SUBCATEGORY	CHLORINE MERCURY CELL
Total subcategory capacity rate	3,545,000 kkg/year
Total subcategory production rate	2,750,000 kkg/year
Number of plants in this subcategory	27
308 Data on file for	15
With total capacity of	1,280,600 kkg/year
With total production of	1,090,000 kkg/year
Representing capacity	36 percent
Representing production	40 percent
Plant production range:	
Minimum	19,100 kkg/year
Maximum	198,000 kkg/year
Average production	77,900 kkg/year
Median production	70,400 kkg/year
Average capacity utilization	75 percent
Plant age range:	
Minimum	2 years
Maximum	26 years
Waste water flow range:	
Minimum	4 cubic meters/day
Maximum	2,100 cubic meters/day
Volume per unit product:	
Minimum	< 1 cubic meters/kkg
Maximum	11 cubic meters/kkg

Sources of data are Stanford Research Institute, Directory of Chemical Producers, U.S.A., 1977, U.S. Department of Commerce, Current Industrial Reports, December 1977; Energy and Environmental Analysis, Inc.; Draft Report, "Preliminary Economic Assessment of Effluent Limitations in the Inorganic Chemical Industry,"June, 1978, and "Economic Analysis of Proposed Revised Effluent Guidelines and Standards for the Inorganic Chemicals Industry," March, 1980.

TABLE 11-2. STATUS OF REGULATIONS - EFFLUENT LIMITATION GUIDELINES

SUBCATEGORY CHLORINE MERCURY CELL

SUBPART F (40 CFR 415.60, 3/12/74)

		STANDARDS					
		BPCTCA		BATEA*		NSPS	
Product Process	Parameters	Max.(1) (kg/kkg)	Avg.(2) (kg/kkg)	Max. (kg/kkg)	Avg. (kg/kkg)	Max. (kg/kkg)	Avg. (kg/kkg)
Mercury Cell Process	TSS	0.64	0.32	No discharge of pwwp[3]		0.64	0.32
	Hg	0.00028 0.00028	0.00014 0.00014	No discharge of pwwp		0.00014	0.00007

* Section 415.63 was remanded and is presently reserved (41 FR 51601, November 23, 1976).

(1) Max. = Maximum of any one day.

(2) Avg. = Average of daily values for thirty consecutive days shall not exceed.

(3) pwwp = Process waste water pollutant.

usually in a clarifier and the underflow, known as brine mud, is sent to a lagoon or filtered. Brine muds from mercury cell plants usually contain small amounts of mercury because the spent brine from the cells is recycled. Consequently brine mud filtrate is recycled or treated before discharge and solids are disposed of in secure landfills.

Before it is sent to the cells, treated brine is evaporated if necessary to remove excess water and then pH adjusted. Spent or depleted brine from the cells is acidified and dechlorinated using vacuum and/or air stripping before being saturated with salt and recycled.

Mercury Cell Process

The mercury cell, in general, consists of two sections: the electrolyzer and the decomposer or denuder. The electrolyzer is an elongated steel trough that is inclined slightly from the horizontal. Mercury flows in a thin layer at the bottom forming the cathode of the cell, and the brine flows cocurrently on top of the mercury. Parallel graphite or metal anode plates are suspended from the cover of the cell. Electric current flowing through the cell decomposes the brine, liberating chlorine at the anode and sodium metal at the cathode. The metallic sodium forms an amalgam with mercury.

$$2\ NaCl(aq) + Hg = Cl2 + 2\ Na(Hg)$$

The amalgam from the electrolyzer flows to a denuder and the spent brine is recycled to the brine purification process. In the denuder, the amalgam becomes an anode to a short-circuited iron or graphite cathode. Deionized water is added to the denuder which reacts with the amalgam to form hydrogen and caustic soda. In modern mercury cells, the denuder or decomposer is a horizontally or vertically laid graphite-packed bed. The water and the amalgam flow countercurrently. Mercury is then returned to the electrolyzer.

Product Purification

Chlorine from the cell is cooled to remove water and other impurities. The condensate is usually steam stripped for chlorine recovery and returned to the brine system or discharged After cooling, chlorine gas is dried further by scrubbing with sulfuric acid. The diluted acid is then usually regenerated, sold or used for pH control. When chlorine gas is compressed and liquified, it leaves behind noncondensible gases known as tail or sniff gas. The tail gas is usually scrubbed with caustic or lime, generating a hypochlorite solution which is then decomposed, used on-site, sold or discharged with or without treatment.

The sodium hydroxide or caustic product formed at the denuder has a concentration of 50 percent NaOH. Some of the impurities present in the caustic can be removed or reduced by the addition of certain chemicals, and the caustic is then filtered. In most cases it is sent to storage or is evaporated if a more concentrated product is required.

Hydrogen gas is cooled by refrigeration to remove water vapor and mercury, and can be treated further by molecular sieves or carbon. Condensate from hydrogen cooling is then discharged or recycled to the denuder after mercury recovery.

Figure 11-1 presents a general process flow diagram of chlorine production by mercury cell.

11.2 WATER USE AND WASTE WATER SOURCE CHARACTERISTICS

11.2.1 Water Use

Water is used at mercury cell plants for noncontact cooling, tailgas scrubbing, cell washing, equipment maintenance, floor washings and in the decompositon of sodium-mercury almagam in the denuder to produce sodium hydroxide. Because most brine systems at mercury cell plants are closed systems, water use in the brine system is minimal. The total water usage at plants was found to range from 7.6 to 204 cubic meters per metric ton (1800 to 49,000 gallons per short ton), with noncontact cooling water which is not covered by this effluent guideline comprising approximately 70 percent of the total.

11.2.2 Waste Sources

The following waste sources are or can be contaminated with mercury and would therefore require treatment if discharged.

Brine Mud

This is the waste produced during the purification of brine before it is introduced into the cell for electrolysis. The metals commonly removed during purification are magnesium, calcium, iron and other trace metals such as titanium, molybdenum chromium, vanadium and tungsten. Calcium and iron are removed as hydroxides. Brine mud is the major portion of the waste solids produced from the process. The solids content of the stream varies from 2 to 20 percent and the volume varies from 0.04 to 1.5 cubic meters per metric ton of chlorine produced. The waste is either sent to a pond for settling or is filtered. The overflow from the pond or the filtrate is

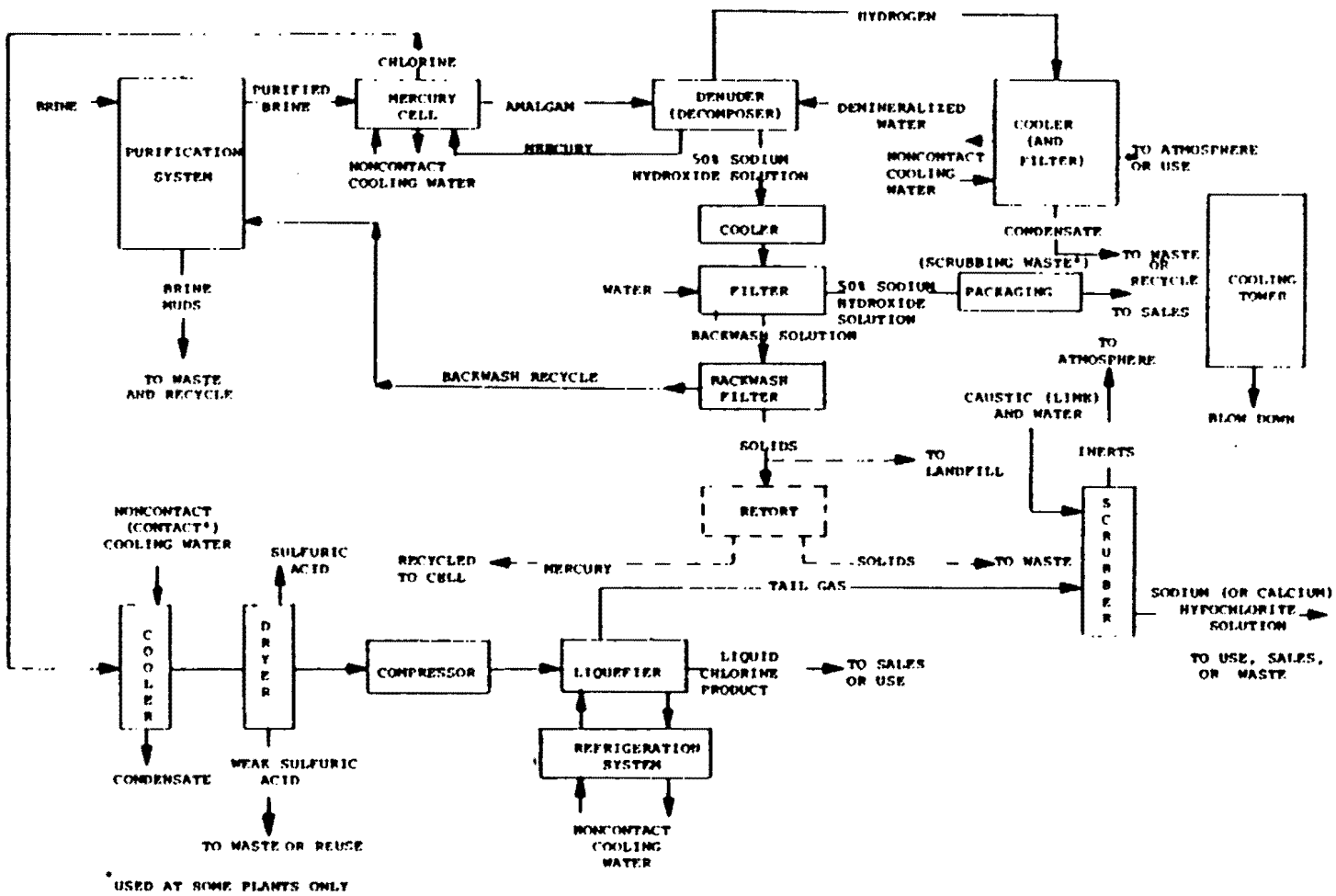

Figure 11-1. General process diagram for production of chlorine/caustic by mercury cells.

recycled to the process as makeup water for the brine. In the mercury cell process, only 16 percent of the NaCl solution is decomposed in the cell and the unconverted brine is recycled to the purification unit after dechlorination. This recycled brine is contaminated with mercury so the resulting brine mud contains small amounts of mercury.

Cell Room Wastes

The major components of this stream include leaks, spills, area washdown and cell wash waters. The amount varies from plant to plant and depends largely on housekeeping practices. Data indicate a range of from 0.01 to 1.5 cubic meters per metric ton of chlorine produced. Cell room waste constitutes the major stream requiring treatment because of the high levels of mercury present in these wastes. If graphite anodes are used in the cells, the wastes may also contain lead (used as an electrical contact at the anode) and chlorinated organics. However most mercury cell plants have converted to metal anodes.

Chlorine Condensate

Condensation from the cell gas is contaminated with chlorine. At some plants, the condensates are recycled to the process after chlorine recovery. Both contact and noncontact water is used for chlorine cooling and for removal of water vapor. Because of this, the amount and type of waste water varies from plant to plant. Data from one plant indicates a waste condensate flow of approximately 0.01 cubic meter per metric ton of chlorine produced.

Spent Sulfuric Acid

Concentrated sulfuric acid is used in the dryer to remove the residual water from the chlorine gas after the first stage of cooling. In most cases, the acid is used until a constant concentration of 50-70 percent is reached. The spent acids can be regenerated for reuse, used for pH control in a treatment system, or sold.

Tail Gas Scrubber Liquid

The tail gas containing the uncondensed chlorine gas from the liquefaction stage, along with some air and other gases, is scrubbed with sodium/calcium hydroxide to form sodium/calcium hypochlorite solution. When the equipment is purged for maintenance, the tail gas is also absorbed in calcium or sodium hydroxide, producing the corresponding hypochlorite solution. The hypochlorite can be used in another process on site, sold, discharged to treatment or decomposed before discharge or

treatment. The amount of tail gas scrubber water varies from 0.04 to 0.58 cubic meter per metric ton of chlorine.

Caustic Filter Washdown

The 50 percent caustic produced at the denuder is filtered to remove salt and other impurities. The filters are backwashed periodically as needed, and the backwash can be discharged to treatment or filtered with the filtrate recycled to the brine system and the solids sent for disposal or mercury recovery. Waste water volume from caustic filter backwashing is variable and no flow data are available.

Hydrogen Condensate

Hydrogen produced at the denuder is cooled to remove mercury and water carried over in the gas. The condensate is either sent to treatment facilities or to mercury recovery after which it can be returned to the denuder. Data on the volume of this waste stream are not available.

Summary of Waste Water Flow

Summing the flow ranges presented above for specific waste sources results in a maximum mercury-contamined waste flow of 2.1 cubic meters per metric ton (m3/kkg) for plants where specific stream data were available. This does not include brine mud flows which are reused instead of discharged, and therefore do not affect total flow.

Data available on total discharges at 13 mercury cell plants are presented in Table 11-3. The average discharge volume indicated is also 2.1 m3/kkg, although flows as high as 6.3 m3/kkg do exist.

11.3 DESCRIPTION OF SPECIFIC PLANTS

The following descriptions of specific plants includes those that were sampled during the screening and verification program. The discussion primarily covers plant practices in waste water control and treatment.

11.3.1 Screening Program

Plant #299 was visited in the screening and verification phase of the program. The mercury-contaminated waste streams include outlet end-box wash water, spills and cleanup water, brine mud saturator sludge, and pump seals waste water. The combined waste water is sent to a surge pond. The effluent from

TABLE 11-3. SUMMARY OF WASTE WATER FLOW DATA FOR CHLORINE MERCURY CELL PLANTS

SUBCATEGORY	CHLORINE MERCURY CELL
Plant Number	Waste Water Flow (m^3/kkg Chlorine)
317	0.51
907	0.36
299	1.6
167	5.6
747	0.69
343	1.6
106	0.67
131	1.7
589	5.8
898	0.98
741	0.51
553	1.0
769	6.3
Average of 13 plants	2.1

the surge pond is mixed with sodium bisulfide and sent to a settling pond. The overflow from the pond is pH adjusted, filtered (in a filter press) and passed through activated carbon towers before discharge. In the sampling program waste water influent to the surge pond and the overflow from the settling pond were sampled. Figure 11-2 gives the general process diagram and shows all the waste streams sampled. Table 11-4 presents major pollutant concentrations and loads for the sampled streams.

11.3.2 Verification

Four more plants (#747, #167, #106 and #317) producing chlorine/caustic by mercury cells were visited and sampled in the verification program. Table 11-5 presents pollutant concentrations for the sampled streams and loads for TSS and mercury.

At Plant #747, the brine dechlorination system has been converted from barometric condensers to a steam ejector system. The conversion resulted in increased chlorine recovery and reduced contact waste water. By providing settling and secondary filter facilities, the brine filter backwash has been eliminated. The tail gas scrubber liquid (hypochlorite solution) is offered for sale and if not marketed, is treated for removal of chlorine and discharged. Mercury bearing waste waters are treated with sodium sulfide (Na2S) and filtered. Solids are retorted for mercury recovery and the filtrate is mixed with the other process waste waters and the pH adjusted before discharge. A flow diagram of the manufacturing process, including the waste water treatment facility, is given in Figure 11-3.

At Plant #167, the waste water streams, consisting of filter backwash, cell room wash, rain water runoff, and leaks and spills, are combined and treated for mercury removal. The water is sent to a holding lagoon and the overflow is reduced by reaction with ferrous chloride, which precipitates mercury. The reacted solution is sent to a clarifier and the underflow from the clarifier is disposed of in a landfill. The overflow is filtered and the filtrate is passed through activated carbon and an ion exchange column prior to discharge to a lagoon. The effluent from the lagoon is pH adjusted and discharged. Figure 11-4 shows the simplified process flow diagram for Plant #167, including the sampling locations.

At Plant #317, the brine purification mud is mixed with spent sulfuric acid and sodium hypochlorite solution. The treatment removes mercury from the mud and transfers it to the solution. The solution is filtered and the solids landfilled. The filtrate is mixed with other mercury-contaminated waste

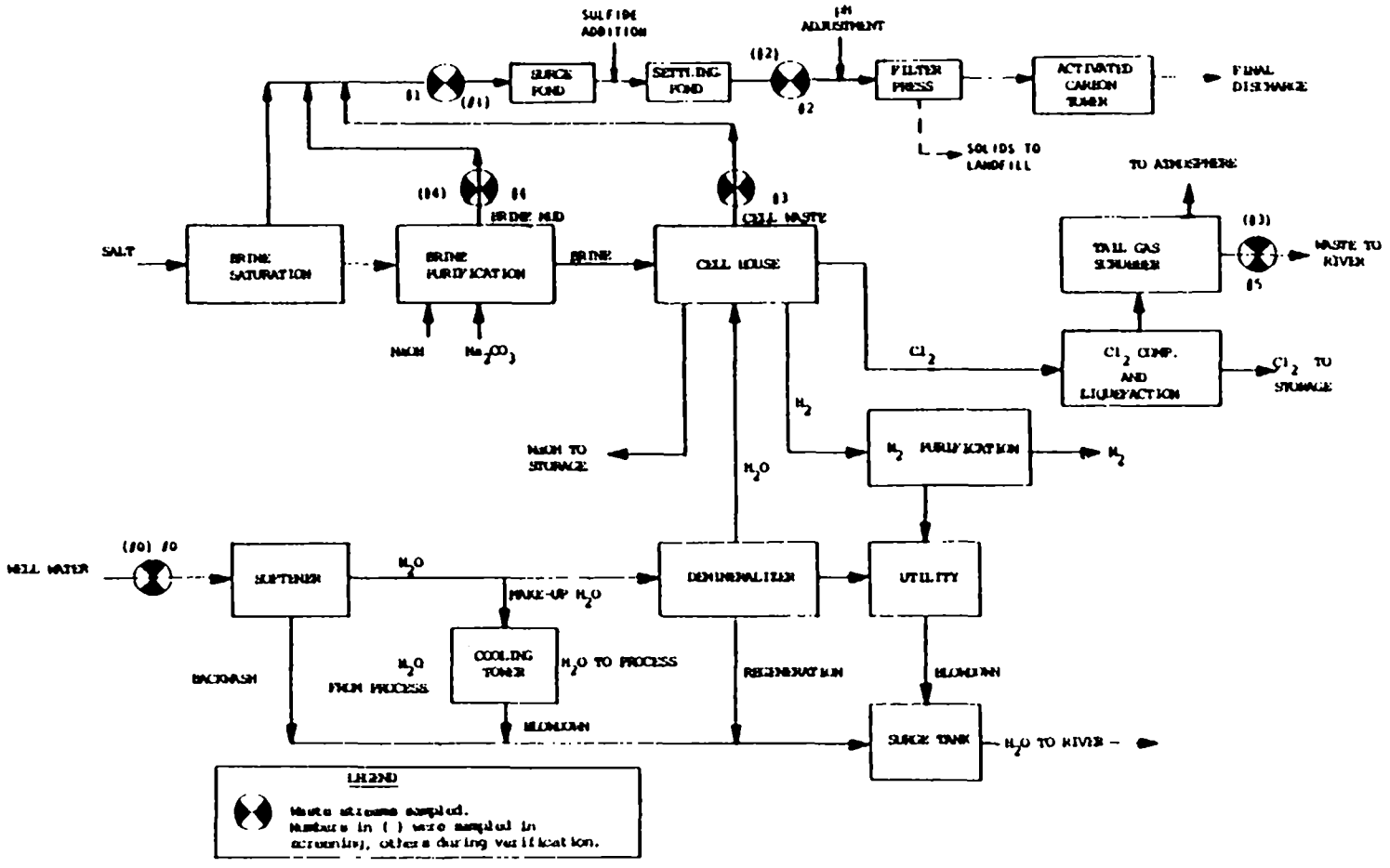

Figure 11-2. General process flow diagram at plant #299 showing the sampling points. Chlorine/caustic (mercury cell) manufacture.

TABLE 11-4. POLLUTANT CONCENTRATIONS AND LOADS AT PLANT # 299

SUBCATEGORY CHLORINE (MERCURY CELL)

Stream Number	Stream Description	TSS (mg/l)	TSS (kg/kkg)	Mercury (mg/l)	Mercury (kg/kkg)
Screening Phase: (1)					
1	Cell Waste	12	0.016	0.15	0.0002
2	Mercury Treatment Effluent	5	0.007	0.029	0.00004
3	Tail Gas Scrubber	NA	NA	0.11	NA
Verification Phase: (2)					
1	Mercury Treatment Influent	91	0.13	5.9	0.080
2	Mercury Treatment Effluent	18	0.026	0.20	0.0003
3	Cell Waste	120	0.17	11.	0.015
4	Brine Mud	13,000	NA	0.54	NA
5	Tail Gas Scrubber	180	0.022	0.17	0.00002

NA = Not available.
(1) = Data based on one 72-hour composite sample of each stream.
(2) = Data based on three 24-hour composite samples of each stream.

TABLE 11-5. POLLUTANT CONCENTRATIONS AND LOADS AT VERIFICATION PLANTS (1)

SUBCATEGORY		CHLORINE (MERCURY CELL)			
Stream Number	Stream Description	TSS (mg/l)	TSS (kg/kkg)	Mercury (mg/l)	Mercury (kg/kkg)
Plant 747					
1	Cell Waste	700	1.6×10^{-1}	18	4.3×10^{-3}
2	Treated Waste	60	1.4×10^{-2}	0.10	2.3×10^{-5}
3	Acid Input	NA	NA	0.023	3.5×10^{-6}
4	Acid Output	NA	NA	0.003	7.2×10^{-7}
5	Dechlor System	9	0.0037	0.035	1.5×10^{-5}
6	Cl_2 Condensate	2	2.7×10^{-5}	0.27	1.8×10^{-6}
7	Tail Gas Scrubber	NA	NA	0.039	8.0×10^{-7}
Plant 167					
5	All Cl_2 Wastes	560	1.9	3.8	1.3×10^{-2}
6	Cell Wash	57	5.7×10^{-4}	0.72	6.7×10^{-6}
7	Brine Process	4	7.1×10^{-3}	0.005	9.0×10^{-6}
8	Treated Waste	2	1.3×10^{-2}	0.32	1.8×10^{-3}
9	Clarifier Underflow	5,900	4.0	10.4	8.7×10^{-5}
Plant 317					
1	Cell Waste	45	NA	14	NA
2	Brine Mud Filtrate	520	NA	34	NA
3	Tank Car Wash	18	NA	0.033	NA
4	Collection Tank	21,000	8.6	123	5.0×10^{-2}
5	Treated Effluent	110	4.4×10^{-2}	0.10	4.3×10^{-5}
6	Deionizer Effluent	18	5.2×10^{-3}	0.001	2.9×10^{-7}
7	N-C Cooling	16	2.2	0.001	1.4×10^{-4}
8	Final Effluent	18	2.4	0.002	3.6×10^{-4}
Plant 106					
1	Cell Wash	79		3.9	
2	Treated Cell Wash	20		0.015	
4	Final Effluent	2.0		<0.0005	NA

NA = Not available.
(1) = Data based on three 24-hour composites.

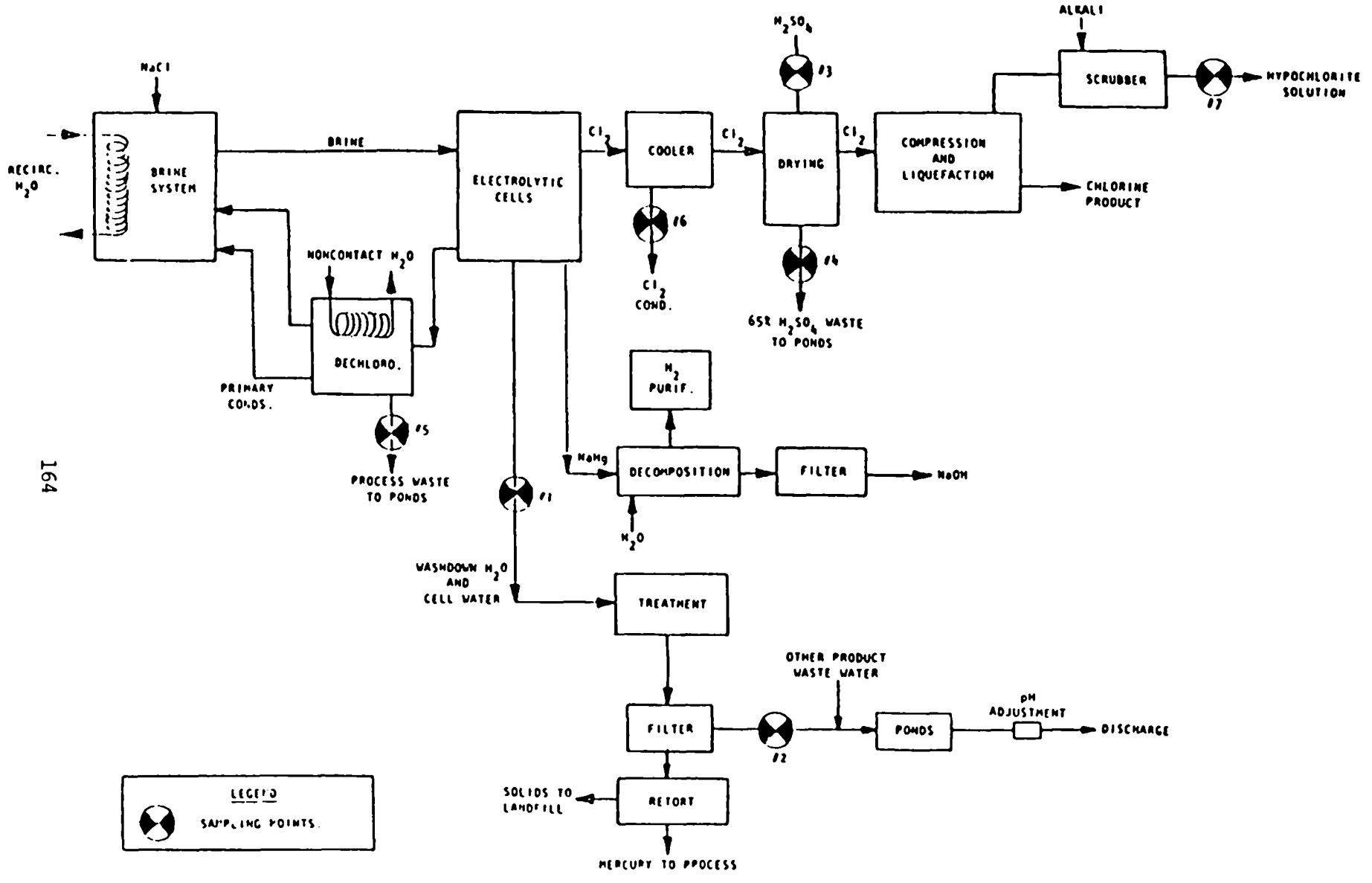

Figure 11-3. General process flow diagram at plant #747 showing the sampling points. Chlorine/caustic (mercury cell) manufacture.

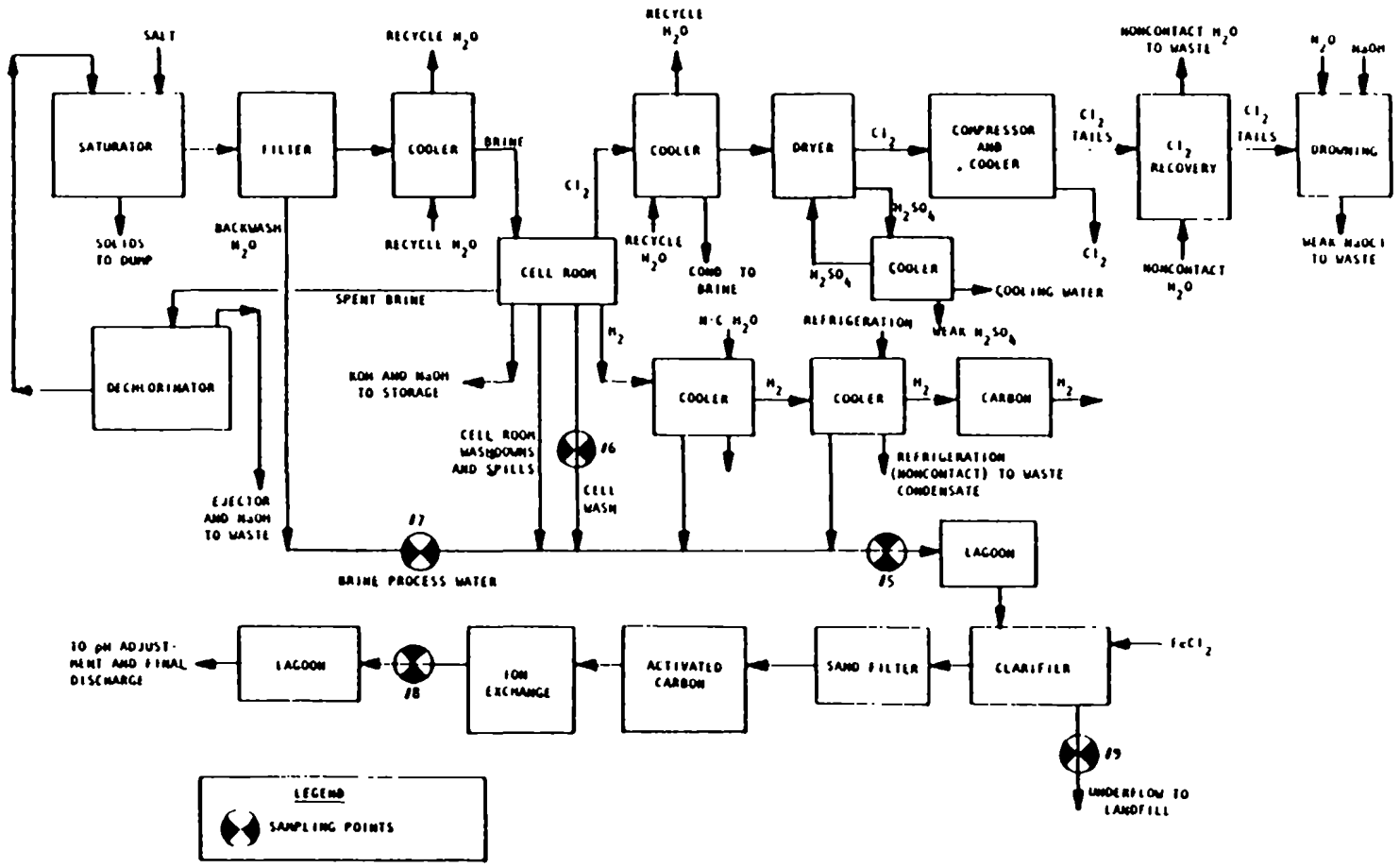

Figure 11-4. General process flow diagram at plant #167 showing the sampling points. Chlorine/caustic (mercury cell) manufacture.

waters, which includes the brine purge, cell room liquid wastes and plant area wash water. This is then reacted with sodium hydrosulfide to precipitate the mercury as mercury sulfide and then filtered. The solids are sent to a mercury recovery unit and the filtrate is sent to a holding tank. The effluent from the holding tank is mixed with de-ionizer waste and noncontact cooling water before discharge. The process flow diagram showing the waste streams sampled is given in Figure 11-5.

At Plant #106, mercury-bearing wastes are segregated from other waste waters and combined for batch treatment. Mercury-bearing leaks, spills, and precipitation are contained and collected by curbing around the cell room and collecting the wastes in a common sump. From the sump the combined waste is pumped for treatment. In the treatment system, the pH is initially adjusted using waste sulfuric acid and 20 percent caustic solution as required. Sodium sulfide and filter aid are added and the waste agitated in fiberglass reaction tanks. The effluent from the tanks is filtered and the filter cake is retorted for mercury recovery. The residual waste, after mercury recovery, is placed in a lined solid waste disposal area. The filtrate is sent to the first of two lined lagoons. Primary pH adjustment is made using waste sulfuric acid and 20 percent caustic before entry into the first lagoon; final pH adjustment is made between the first and the second lagoons.

11.3.3 Descriptions of Plants Not Sampled

At Plant #589, the waste water going to the mercury treatment system consists of cell room washdown, brine filter backwash, leaks, spills, cleanup water, and hydrogen cooling condensate. The waste waters are reacted with hydrochloric acid and sodium bisulfide and then sent to a settling basin where mercury sulfide precipitates. The overflow is passed through a series of effluent filters before discharge.

At Plant #343, the cell room wash water, brine purification sludge, and chlorine cooling condensate are combined and sent to a pond. The suspended solids settle in the pond and are dredged out once a year. The dredged sludge is "Chem Fixed" and disposed of in an appropriate landfill. The overflow from the pond is reacted with Na2S and the reacted solution is sent to a clarifier. The clarifier underflow, consisting mainly of mercury sulfide, is returned to the pond. The clarifier overflow is discharged.

All contact waste water at Plant #907 is treated for mercury removal in a patented process involving reduction of mercury to the metallic state using sodium borohydride. Previously contaminated wooden flooring in the cell room has been removed and replaced with fiberglass gratings to reduce the

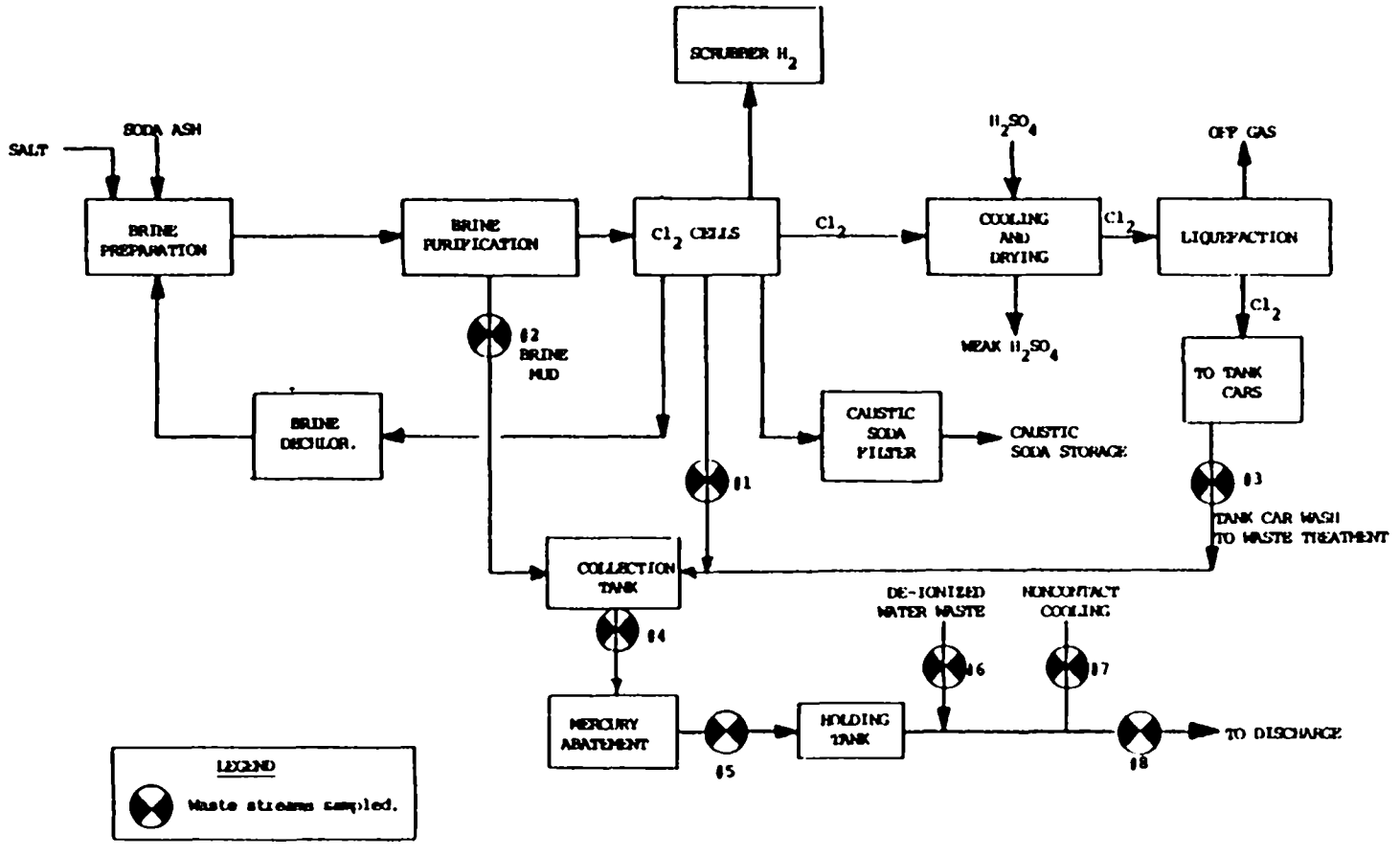

Figure 11-5. General process flow diagram at plant #317 showing the sampling points. Chlorine/caustic (mercury cell) manufacture.

amount of mercury in the effluent and for better waste control. Molecular sieves have been installed on cell end boxes to reduce the mercury content in the air vented from the cells. The treatment not only cleans the air but is also believed to reduce mercury in the plant area runoff.

In the treatment system, the mercury-contaminated waste water is reacted with sodium borohydride to reduce dissolved mercury to the metallic form. The reacted solution is filtered prior to delivery to one of the banks of three columns packed with anthracite coal. After passing through three absorption columns in series, the treated waste water is delivered to large holding tanks, from which it may be discharged or returned to treatment, depending on its mercury content. Filter cake, resulting from the filtration of the waste prior to the coal absorption step, is retorted for mercury recovery.

Waste solids at this facility, including mercury treatment sludges and brine muds, are deposited in an on-site disposal area. Chlorine discharges are essentially eliminated by three significant waste management practices: the chlorine condensate is collected and returned to the brine system, tail gas scrubbing effluents are used in the manufacture of another product, and spent sulfuric acid from chlorine drying is dechlorinated in an air stripper and shipped off-site for the manufacture of another product. Gases from the air stripper are returned to the chlorine purification header.

At Plant #324, the barometric condenser on the brine dechlorination was replaced with an indirect cooler, resulting in a reduction of chlorinated waste water. The tail gas scrubber effluent is used for the manufacture of another product, and the brine muds are sent to a pond. Small amounts of mercury, when detected in the brine mud, are leached with water and treated with other mercury-contaminated waste waters which include the cell room wash water, caustic filter backwash, and brine leaks. The combined waste water is mixed with hydrogen processing waste water, reacted with sulfuric acid, sodium borohydride, and sodium sulfide, and then filtered. The filtrate is adjusted for pH and recycled to process.

At Plant #385, the brine mud sludge is sent to a retention pond where it accumulates. All process contact waste water is collected in an unlined pond where it is treated and the treated effluent is used as the scrubber liquid for tail gases. The spent scrubber solution is sent to an adjacent paper plant for use.

At Plant #416, the cell room wastes are used for bleach manufacture. The waste water streams from the chlorine/caustic plant are sent to an adjacent paper company.

At Plant #784, the waste water, consisting of KCl brine filter backwash and area washdown and spills, is sent to a basin. The basin equalizes the flow and the overflow is treated with sulfuric acid prior to reaction with NaHS and clarification. The clarifier overflow passes through an activated carbon filter and to a final tank where it undergoes pH adjustment before discharge.

The wastes are segregated at Plant #674. The clarification pond is used for waste streams containing suspended solids. The streams going to the pond include brine purification muds and spent chlorinated lime. The mercury-contaminated waste waters are treated separately. These include the brine saturation waste, brine filter backwash, cell room sumps, and tank car washes. The combined mercury-laden waste water is sent to a collection pond and the overflow from the pond is pH adjusted before the addition of Na2S. The reacted solution is sent to a another pond and the pond overflow is passed through a carbon adsorption column before final discharge. A part of the treated effluent is re-injected into the brine well.

At Plant #012, the brine treatment area is paved to trap all spills, leaks, and rain runoff from that area. The recovered waste is recycled to the weak brine reservoir. The contaminated waste waters from the plant are re-injected into the brine wells to keep the hydraulic balance and maintain pressure in the salt deposits.

11.3.4 Summary of the Toxic Pollutant Data

Presented below are the toxic pollutants found in the raw wastes during screening and verification.

Because several waste streams usually contribute to the total raw waste at mercury cell plants, a calculation was often necessary to determine the pollutant concentrations that would exist in the streams before they were mixed prior to treatment. An example of this calculation is the "mixing" of the following hypothetical streams:

Stream A: 100 gallons per minute, 15 mg/l

Stream B: 10 gallons per minute, 60 mg/l

$$\frac{(\text{Flow x concentration}) + (\text{Flow x concentration})}{\text{Total Flow}}$$

= concentration of mixed streams

$$= \frac{(100\ \text{gpm})(15\ \text{mg/l}) + (10\ \text{gpm})(60\ \text{mg/l})}{110\ \text{gpm}} = 19\ \text{mg/l}$$

The maximum raw waste concentrations observed during any single 24-hour sampling period were:

Maximum Raw Waste Concentrations Observed
(µg/l)

Pollutant	Screening Plant (#299)	Verification Plants (#299, #747, #167, #206, #317)
Antimony	< 250	770
Arsenic	< 10	400
Cadmium	< 1	790
Chromium	8	180
Copper	350	2,300
Lead	1	1,900
Mercury	150	180,000
Nickel	< 100	2,400
Silver	< 1	870
Thallium	140	440
Zinc	230	34,000

Section 5.1.2 of this report describes the methodology of the screening and verification sampling program. In the chlorine mercury cell industry, a total of 18 days of sampling were conducted at Plants #299, #747, #167, #317 and #106. Thirty-two different sampling points were involved covering various raw waste streams and the treated effluents at these plants. The evaluation of toxic metal content of these process related waste streams was based on 949 analytical data points. The screening for toxic organic pollutants at Plants #299 and #167 generated an additional 490 analytical data points. The daily raw waste loads were calculated from the waste stream flow rates measured or estimated at the time of sampling and the measured pollutant concentration.

The daily loading is determined by:

$$\text{Daily loading (as kg of pollutant per day)} = \frac{(C)(Q)}{1000}$$

Where:

C is the concentration of the pollutant expressed in units of mg/l (Note: kg/m3 = 1000 mg/l), and

Q is the waste stream flow rate expressed in units of m3/day (m3, a cubic meter, is equal to 264.2 U.S. gallons).

Similarly, the unit loadings were calculated from the reported chlorine production rate, the waste stream flow rate, and the measured pollutant concentration:

Unit loading (as kg of pollutant per kkg of chlorine) $= \frac{(C)(Q)}{1000P}$

Where C and Q are the same as described above, and P is the chlorine production rate expressed in units of kkg/day (kkg is 1000 kg, a metric ton, which is equal to 2205 lbs).

The minimum, average, and maximum values are based on data from those plants where the particular pollutant was found at a concentration greater than the analytical detection limits and considered a "significant concentration". The term "significant concentration" means an observed concentration in any 24- or 72-hour composite raw waste sample that is above the analytical detection limit, and treatable by an available technology regardless of economic considerations.

In Table 11-6, the toxic pollutant raw waste data are presented as the average daily concentrations and the unit loadings found at the individual plants. These averages were derived by averaging the concentrations and loads based on three 24-hour composite samples from each plant.

In Table 11-7 daily loadings (in kg/day) and unit loadings (in kg/kkg) are presented as minimum, average and maximum values based on the data presented in Table 11-6.

Based on the total annual production of this subcategory and the average waste load generated per unit product, the estimated total pollutant raw waste loads generated each year by this subcategory are as follows:

Pollutant	Raw Waste load (kg/year)
Antimony	1,400
Arsenic	1,000
Cadmium	210
Chromium	360
Copper	960
Lead	880
Mercury	44,000
Nickel	820
Silver	850
Thallium	770
Zinc	7,200

TABLE 11-6. TOXIC POLLUTANT RAW WASTE CONCENTRATIONS AND LOADS AT VERIFICATION PLANTS $\left(\frac{mg/l}{kg/kkg}\right)$

SUBCATEGORY	CHLORINE (MERCURY CELL)				
Pollutant	Plant #				
	299	747	167	317	106
Antimony	0.48 0.00077	0.11 0.000078	*	*	0.49 0.00070
Arsenic	0.23 0.00037	0.030 0.000021	0.33 0.0011	0.10 0.00005	*
Cadmium	0.010 0.000016	0.020 0.000014	*	0.46 0.00023	0.031 0.000044
Chromium	0.063 0.00010	0.10 0.000071	0.12 0.00040	0.080 0.000040	0.013 0.000019
Copper	0.30 0.00047	0.38 0.00027	0.075 0.00025	1.2 0.00060	0.12 0.00017
Lead	0.060 0.000096	0.16 0.00011	0.072 0.00024	1.4 0.00070	0.33 0.00047
Mercury	5.9 0.0081	18 0.0043	3.8 0.013	123 0.048	3.9 0.006
Nickel	*	0.093 0.000066	0.060 0.00020	1.4 0.00070	0.17 0.00024
Silver	*	0.047 0.000033	*	0.11 0.000055	0.58 0.00083
Thallium	0.18 0.00029	0.022 0.000016	*	*	0.38 0.00054
Zinc	0.27 0.00043	0.69 0.00049	0.17 0.00057	20 0.010	0.96 0.0014

* - Concentration below significant level as defined in 11.3.4.

TABLE 11-7. SUMMARY OF RAW WASTE LOADINGS AT VERIFICATION PLANTS

SUBCATEGORY CHLORINE (MERCURY CELL)

Pollutant	Daily Loadings (kg/day)			Unit Loadings (kg/kkg)			Number of Plants Averaged*
	min.	avg.	max.	min.	avg.	max.	
Antimony	0.044	0.17	0.30	0.000078	0.00052	0.00077	3
Arsenic	0.0054	0.11	0.27	0.000021	0.00038	0.0011	4
Cadmium	0.0062	0.013	0.025	0.000014	0.000076	0.00023	4
Chromium	0.0043	0.037	0.098	0.000019	0.00013	0.00040	5
Copper	0.045	0.10	0.18	0.00025	0.00035	0.00060	5
Lead	0.036	0.070	0.12	0.000096	0.00032	0.00070	5
Mercury	1.6	3.1	5.1	0.0043	0.016	0.048	5
Nickel	0.037	0.056	0.075	0.000066	0.00030	0.00070	4
Silver	0.0059	0.082	0.22	0.000033	0.00031	0.00083	3
Thallium	0.0090	0.086	0.14	0.000016	0.00028	0.00054	3
Zinc	0.14	0.41	1.1	0.00043	0.0026	0.010	5

* - Only those plants where the pollutant was observed at "significant concentrations" are included in the averaging. "Significant concentrations" is defined in 11.3.4.

11.4 POLLUTION ABATEMENT OPTIONS

11.4.1 Toxic Pollutants of Concern

Mercury is the major toxic pollutant of concern in the production of chlorine by the mercury cell process. Other toxic metals often found in significant concentrations in raw wastes include arsenic, antimony, cadmium, chromium, copper, lead, nickel, silver, thallium and zinc. Sources of these metals are assumed to be impurities in the raw salt or brine and corrosion products from the reaction between chlorine and process equipment materials of constuction. No toxic organics were found at significant levels.

11.4.2 Prevailing Control and Treatment Practices

Section 11.2.3 described specific control and treatment practices at 14 plants. All known mercury cell plants practice treatment of mercury-bearing wastes, but control practices such as recycling of brine mud filtrate or pond overflow, chlorine condensates, hydrogen condensates and caustic filter backwash, and solids handling vary from plant to plant. Although all known treatment facilities precipitate mercury and separate the solids formed by clarification and/or filtration, sampling data has shown that some treatment systems including those with more advanced technologies such as adsorption or ion exchange, are not operating efficiently.

11.4.3 Process Modifications and Technology Transfer Options

The following process modifications are being practiced at one or more mercury cell plants and can significantly reduce pollutant loads discharged.

Anode Material

Nearly all mercury cell plants now use metal anodes. Their use, as opposed to graphite anodes, improves the power efficiency of the cells and reduces the potential pollutant load.

Liquefaction of Chlorine

Utilization of high pressure and refrigeration for chlorine recovery will reduce the chlorine content of tail gases.

Brine Recycling

Although practiced at many facilities not all plants are using a closed-loop brine system which eliminates a significant waste volume requiring mercury treatment.

Mercury Emissions

Hydrogen gas produced in the denuder can be refrigerated and passed through treated carbon or molecular sieves to remove the mercury escaping with the gas. This will reduce the mercury emissions and reduce atmospheric fallout in the neighborhood of the plant. This in turn will reduce mercury concentrations in storm runoff. Two plants are practicing this control technology.

Tail Gas Emission Control

When chlorine gas produced from the cell is compressed and cooled, chlorine separates as liquid chlorine, and noncondensable gases (tail or sniff gas containing residual chlorine vapor) are produced at the discharge end of the condenser. The amount of chlorine present in the tail gas is significant and has to be removed and treated or recovered before the tail gas is vented to the atmosphere. The common industrial practice is to scrub the gas with caustic soda or lime solution thus producing the corresponding hypochlorite. The hypochlorite solution is either sold, used on-site, sent to a waste water treatment plant, or discharged without treatment. Treatment of this waste is a relatively recent practice. Decomposition is a common method of treatment using catalytic, thermal, and chemical methods as described below.

Catalytic decomposition involves the addition of small quantities of cobalt, nickel, and iron chloride to the waste streams, followed by retention in reaction tanks for periods up to several days. Of the two plants employing this technology, one reports zero discharge of chlorine, and the other reports respective average and maximum chlorine discharge rates of 0.015 and 0.14 kg per metric ton of chlorine produced.

Thermal decomposition occurs when the temperature of the solution containing hypochlorite reaches 175 degrees F. Lime reacts with chlorine exothermically, producing heat and calcium hypochlorite. If the hypochlorite solution is not cooled, thermal decomposition occurs . One chlorine/caustic plant is using this treatment method and another is planning to use it. The plant using thermal decomposition reports complete conversion of hypochlorite to chloride.

Chemical decomposition takes place by reacting the hypochlorite solution with a chemical reactant which is usually sodium sulfite or hydrogen peroxide. Chemical decomposition is expensive but complete and rapid.

When chlorine is present in a dissolved form (hypochlorous acid) in water, a stripping technique may be applied to recover

the chlorine. Chlorine condensate streams and spent chlorine-drying acid are most commonly treated by steam or vacuum stripping, with the chlorine frequently returned to process for purification and recovery as a product. The tail gas is not generally scrubbed with water because water does not effectively remove chlorine and the chlorine concentration in the exhaust will reach 0.1 to 4.5 percent by volume after scrubbing with water. One effective method of chlorine recovery from the tail gas is by the passage of the gas through an absorbing material such as carbon tetrachloride and subsequent recovery of the chlorine. The process is proprietary and little information is available on its design or performance.

11.4.4 Best Management Practices

Area Runoff

Provisions can be made to divert and contain storm runoff from plant areas. Collected runoff can then be sent to the waste water treatment system.

Leaks and Spills

The brine treatment area and the cell room areas can be paved with fiberglass gratings, and provision should be made to collect the leaks and spills from the operation.

Mercury Contaminated Solids

The precipitated mercury waste should be stored in a lined pond, disposed of in a secured landfill or sent to mercury recovery operations. Brine mud should be discharged to a lined pond or a secure landfill after filtration. The brine mud contains small amounts of mercury which can leach into the ground water if proper safety precaution are not taken.

Transportation, Handling and Abnormal Operations

Provisions should be made to remove chlorine from air emissions resulting from abnormal operating conditions such as start up and shut down, or from vents on returned tank cars, cylinders, storage tanks, and process transfer tanks during handling and loading of liquid chlorine.

11.4.5 Advanced Treatment Technologies

Methods available for the removal of elemental mercury or mercuric salts from plant waste waters include precipitation with sodium sulfide to form insoluble mercuric sulfide, adsorption by activated carbon, adsorption by ion-exchange and other resins, reduction by borohydrate, hydrazine, sulfite,

hypophosphite or iron, and biological reduction (57). All of these methods are patented; many of these methods have been proven on a pilot scale only. Sulfide precipitation and adsorption techniques will also provide for the removal of other toxic metals.

11.5 SELECTION OF APPROPRIATE TECHNOLOGY AND EQUIPMENT

11.5.1 Technologies for Different Treatment Levels

Following the evaluation of significant toxic pollutants found in raw waste waters, current industry treatment practices and applicable treatment alternatives, two levels of end-of-pipe treatment were selected as alternatives for application in the mercury cell chlorine subcategory.

Level 1

This treatment consists of sulfide precipitation of mercury-bearing waste water followed by pressure filtration. This level of treatment, which will also reduce other heavy metals, includes recycle of the brine waste stream back to process, and the settling and storage of brine muds. Mercury-bearing solids can be sent to mercury recovery or disposal. The flow diagram for this treatment level is shown in Figure 11-6.

Level 2

The filtered Level 1 effluent is passed through a granular activated carbon bed where residual metal sulfides and any metallic mercury will be removed. The flow diagram for this treatment level is shown in Figure 11-7.

11.5.2 Equipment for Different Treatment Levels

Equipment Functions

In Level 1, typical of existing treatment facilities, mercury-bearing wastes are equalized in a surge tank, and following chemical mixing, sulfide precipitates are removed in a conventional plate and frame filter press followed by final pH adjustment of the filtrate before discharge. In Level 2 a conventional granular activated carbon filter is added for further removal of residual metals before pH adjustment.

Chemical Handling

Sodium bisulfide is used with filter aid after pH adjustment to pH 5-7. Care is needed to prevent escape of toxic

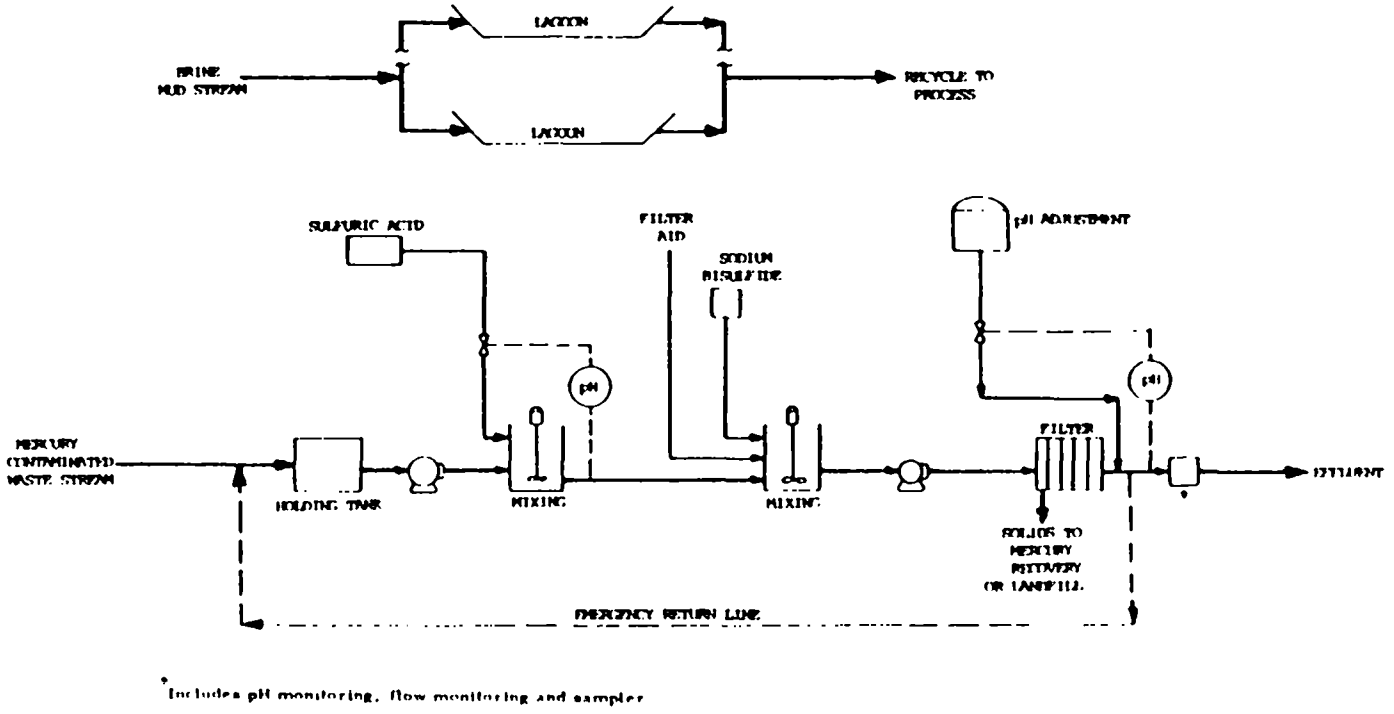

*Includes pH monitoring, flow monitoring and sampler

Figure 11-6. Level 1 waste water treatment for chlorine - mercury cell subcategory.

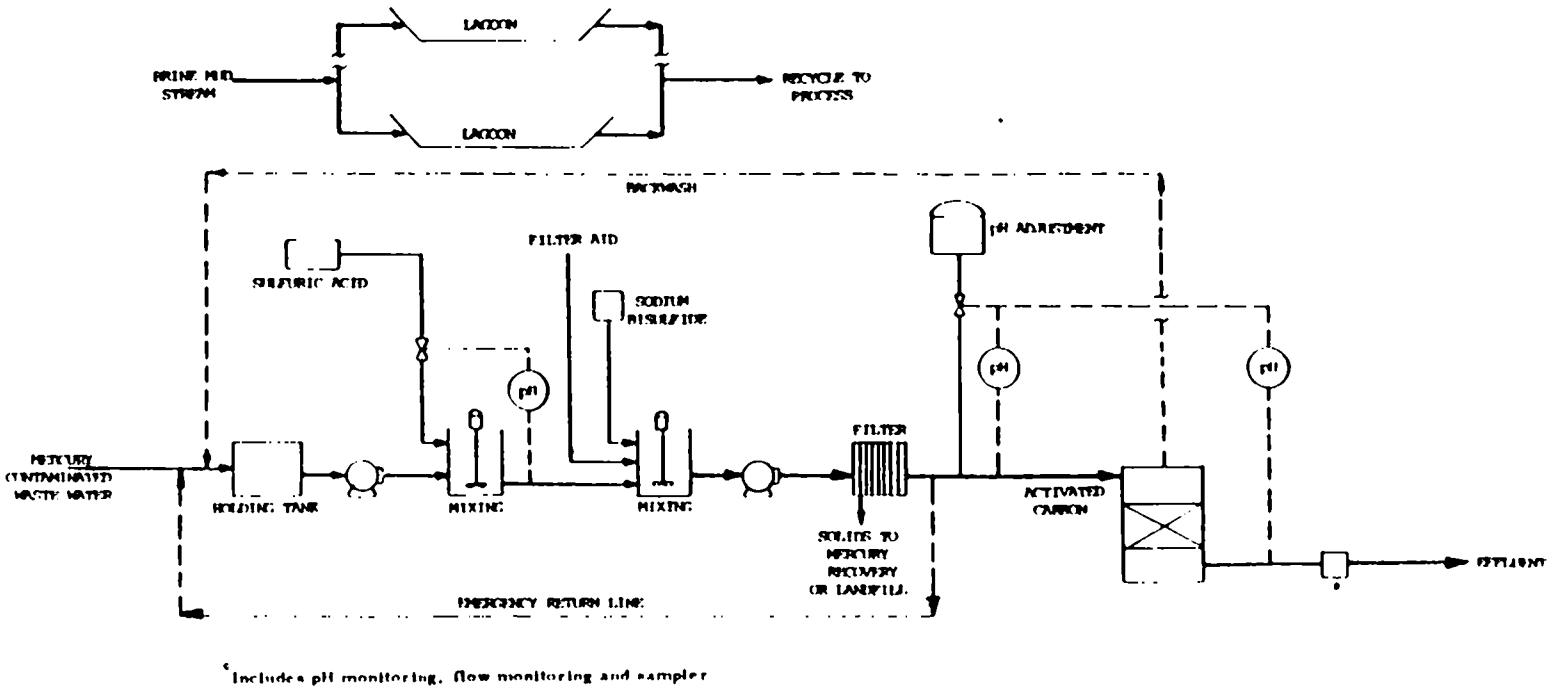

[c] Includes pH monitoring, flow monitoring and sampler

Figure 11-7. Level 2 waste water treatment for chlorine - mercury cell subcategory.

and obnoxious H2S fumes at neutral and acid pH levels. At Level 2 no additional chemicals are used since the activated carbon bed is not regenerated but is periodically removed and replaced. The handling of granular carbon may cause temporary dust problems but it causes no special hazards.

Separation and Removal of Solids

Conventional settling and filtration methods are used, but because of the toxicity of mercury, precipitated sludges should be disposed of in a safe chemical waste area.

Monitoring Requirements

Both levels of treatment include provisions for sampling and monitoring of the waste water discharge. Monitoring of heavy metals is done by atomic absorption methods at a qualified commerical laboratory: Simple field tests for heavy metals as a group are available for routine process control.

11.6 TREATMENT COST ESTIMATES

11.6.1 General Discussion

To prepare treatment cost estimates, a model plant concept was developed. The proposed model plant characteristics are:

Waste Water Flow

Data presented in Table 11-3 indicate an average waste water flow of 2.1 m3/kkg for 13 plants, while the average of the five plants surveyed during this study averaged 1.7 m3/kkg. The latter value was used for developing the detailed cost estimates presented in the cost tables because the technology base for the model plants was that observed in the field.

For effluent limitation calculations (see 11.7.2) the more conservative unit flow from the larger data base and 2.1 m3/kkg has been used. Cost estimates will be adjusted to reflect the larger unit flow before promulgation.

Chlorine Production

Approximately 50 percent of the production data for all the chlorine/caustic plants using mercury cells is available on file. Production ranges from 19,000 to 198,000 kkg of chlorine/year. Three model plants with productions of 19,100 kkg/yr, 95,500 kkg/yr and 191,000 kkg/yr were selected to

represent the subcategory production range. The flow per unit of production is assumed to be the same for each size of model plant. Seventy-seven percent of the plants for which flow data was available have flows per unit of production equal to or less than the average unit flow (Table 11-3).

Solid Waste Produced

Brine mud constitutes the major source of solid waste generated at chlorine plants. Although flows and solids content varies considerably from plant to plant, an average flow of 0.42 m3/kkg at 10 percent suspended solids gave an estimated solids load of 42 kg/kkg to be used for cost estimating purposes.

11.6.2 Chlorine Bearing Wastes

In the selection of model plants, the following assumptions have been made for the chlorine contaminated waste streams. The chlorine condensate waste stream has not been included in the waste streams going to the treatment facility. In the majority of the chlorine/caustic plants, this stream is stripped of chlorine by steam or vacuum and the chlorine is recycled to the purification operation. The waste water is then returned to the process and introduced to the brine purification unit or sent to the treatment unit. The quantity of waste water generated by this operation is small and does not significantly affect the flow determination. In some cases the chlorine gas from the cells is contact cooled with water and the scrubbed liquid, after steam stripping, is reused. The stripping operation in the recovery of chlorine is part of the process and, therefore, its cost is not included in the treatment cost. The spent tail gas scrubber solution, which contains mainly calcium or sodium hypochlorite, is assumed to be used or decomposed before it is discharged or sent to treatment. Thermal decomposition can be practiced at no additional cost at some facilities, while another efficient treatment method is catalytic decomposition. The cost estimates for decomposition are not included here because at many plants the hypochlorite stream is sold, used on-site or only infrequently discharged depending on market demand.

However, because of the environmental effects of high levels of chlorine in waste water discharges, the cost for the dechlorination of total plant discharges using sulfur dioxide has been included because this is the treatment method on which control of total residual chlorine is based.

11.6.3 Model Plant Treatment Costs

On the basis of the model plant specifications and design concepts presented earlier, the estimated costs of treatment for three models having different production levels are shown in

Table 11-8, 11-9 and 11-10. The costs of Level 2 treatment are incremental over Level 1 costs. Annual treatment costs as a function of production are shown graphically in Figure 11-8. Similarly, treatment cost per metric ton of product is shown in Figure 11-9. Table 11-11 presents a summary of the unit cost distribution between amortization and operation and maintenance components.

Variability in specific plant water use practices and treatment applications may be responsible for treatment costs that are higher than those developed for the model plant. These variations have been considered. Using the model plant annual cost curve as a baseline, consideration of the additional plant specific cost factors results in the cost analysis as shown in Figures 11-10 and 11-11 for Level 1 treatment and Figures 11-12 and 11-13 for the Level 2 treatment. The cost envelopes reflect the impact of higher flows (2.4 m3/kkg) which are required at some plant locations and the consequent increase in costs due to additional chemical requirements and the variability in the costs associated with solid waste disposal. A combination of these and other specific plant factors may result in additional costs ranging from 30 to 125 percent of the baseline costs.

Cost estimates are presented in Table 11-12 for plants requiring dechlorination of waste waters by sulfur dioxide. For the range of model plant productions, the annual cost of sulfur dioxide treatment varies from $1.72 to $0.40 per metric ton of product.

11.7 BASIS FOR REGULATIONS

11.7.1 Basis for BPT Limitations

Technology Basis

Existing mercury cell chlorine plants are controlling mercury in their waste waters in accordance with existing BPT regulations which require a discharge of less than 0.00014 kg/kkg of product as a 30-day average. These BPT regulations, 40 CFR 415.62 (a) presently in effect will not be revised. Pollutants regulated include TSS and mercury. The technology basis of sulfide precipitation and filtration of mercury bearing streams (Level 1) is currently being applied at 24 plants in this subcategory. Other plants in the industry use mercury control methods that are different in detail but with the same objective.

The existing regulations, presented in Table 11-2, are sustained by the fact that plants having properly operated BPT technology have demonstrated the achievability of the effluent

TABLE 11-8 MODEL PLANT TREATMENT COSTS

Subcategory CHLORINE Mercury cell

Production 19,100 metric tons per year (21,057 tons per year)
54 metric tons per day (60 tons per day)
Waste water flow 91 cubic meters per day.

	LEVEL OF TREATMENT*	
	FIRST	SECOND
A. INVESTMENT COST		
Construction	$49,100	$500
Equipment in place, including piping, fittings, electrical work and controls.....	68,100	15,000
Monitoring equipment in place.....	9,000	
Engineering design and inspection.....	25,240	3,100
Incidentals, overhead, fees, contingencies...	25,240	3,100
Land.....	21,000	
TOTAL INVESTMENT COST	$197,680	$21,700
B. OPERATION AND MAINTENANCE COST		
Labor and supervision.	$112,000	$14,000
Energy.....	1,250	
Chemicals.....	500	1,400
Maintenance.....	17,668	2,170
Taxes and insurance...	5,930	651
Residual waste disposal.....	4,400	
Monitoring, analysis and reporting.....	15,000	7,500
TOTAL OPERATION AND MAINTENANCE COST	$156,748	$25,721
C. AMORTIZATION OF INVESTMENT COST	$28,745	$3,530
TOTAL ANNUAL COST	$185,493	$29,251

*First level represents the base cost of treatment system.
Other levels represent the incremental cost above base cost.

TABLE 11-9 MODEL PLANT TREATMENT COSTS

Subcategory CHLORINE Mercury cell

Production 95,500 metric tons per year (105,288 tons per year)
272 metric tons per day (300 tons per day)
Waste water flow 455 cubic meters per day.

	LEVEL OF TREATMENT*	
	FIRST	SECOND
A. INVESTMENT COST		
Construction	$134,500	$1,000
Equipment in place, including piping, fittings, electrical work and controls.....	141,300	61,000
Monitoring equipment in place.....	9,000	
Engineering design and inspection.....	56,960	12,400
Incidentals, overhead, fees, contingencies...	56,960	12,400
Land.....	63,000	
TOTAL INVESTMENT COST	$461,720	$86,800
B. OPERATION AND MAINTENANCE COST		
Labor and supervision.	$112,000	$14,000
Energy.....	3,700	
Chemicals.....	2,500	7,000
Maintenance.....	39,872	8,680
Taxes and insurance...	13,851	2,604
Residual waste disposal.....	21,400	
Monitoring, analysis and reporting.....	15,000	7,500
TOTAL OPERATION AND MAINTENANCE COST	$208,323	$39,784
C. AMORTIZATION OF INVESTMENT COST	$64,871	$14,122
TOTAL ANNUAL COST	$273,194	$53,906

*First level represents the base cost of treatment system.
Other levels represent the incremental cost above base cost.

TABLE 11-10 MODEL PLANT TREATMENT COSTS

Subcategory CHLORINE Mercury cell

Production	191,000 metric tons per year	(210,577 tons per year)
	545 metric tons per day	(601 tons per day)
Waste water flow	910 cubic meters per day.	

	LEVEL OF TREATMENT*	
	FIRST	SECOND
A. INVESTMENT COST		
Construction	$257,700	$2,000
Equipment in place, including piping, fittings, electrical work and controls.....	213,200	115,000
Monitoring equipment in place.....	9,000	
Engineering design and inspection.....	95,980	23,400
Incidentals, overhead, fees, contingencies...	95,980	23,400
Land.....	123,000	
TOTAL INVESTMENT COST	$794,860	$163,800
B. OPERATION AND MAINTENANCE COST		
Labor and supervision.	$112,000	$14,000
Energy.....	6,400	
Chemicals.....	5,000	14,000
Maintenance.....	67,186	16,380
Taxes and insurance...	23,845	4,914
Residual waste disposal.....	42,600	
Monitoring, analysis and reporting.....	15,000	7,500
TOTAL OPERATION AND MAINTENANCE COST	$272,031	$56,794
C. AMORTIZATION OF INVESTMENT COST	$109,311	$26,650
TOTAL ANNUAL COST	$381,342	$83,444

*First level represents the base cost of treatment system.
Other levels represent the incremental cost above base cost.

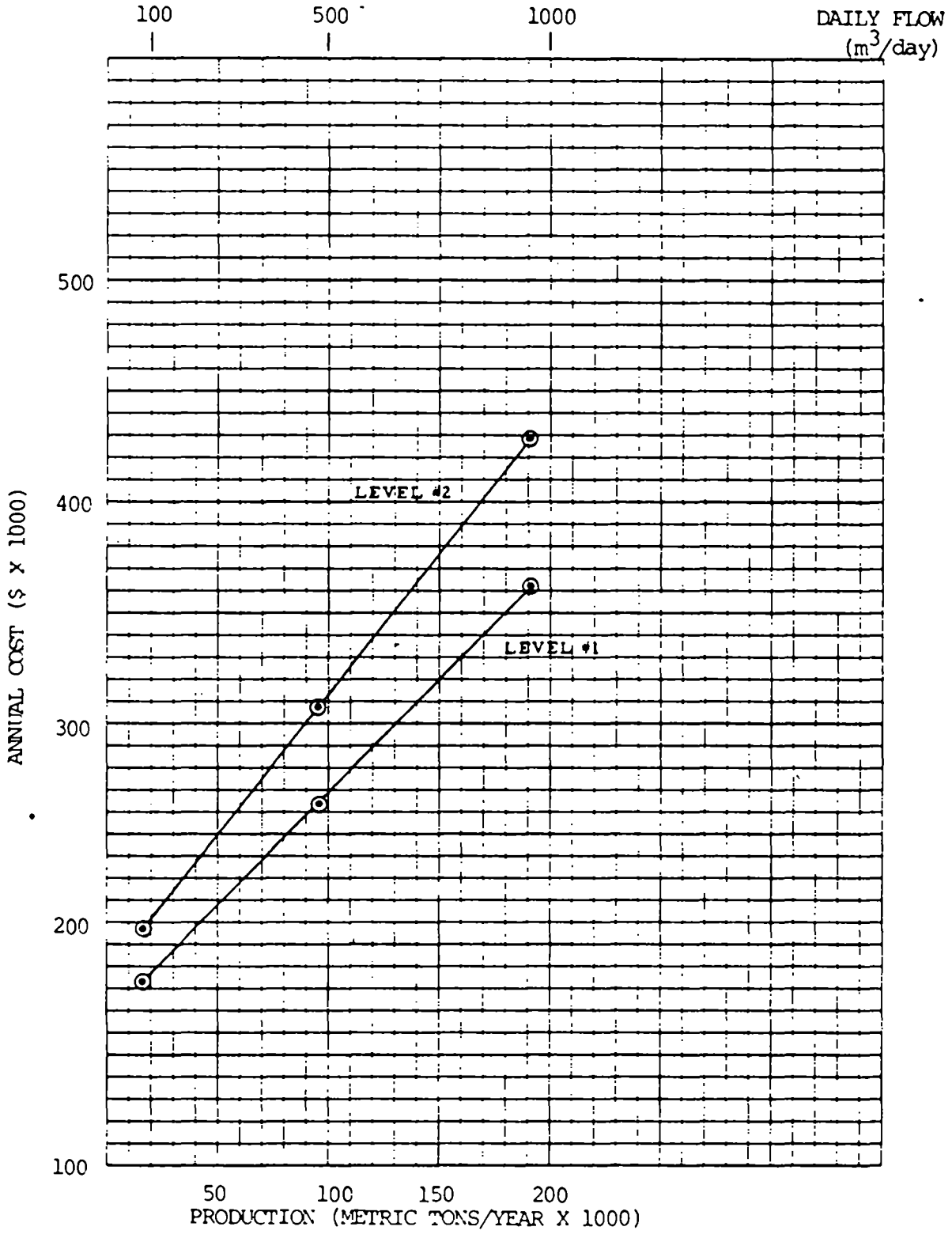

Figure 11-8. Annual treatment cost vs. production for the chlorine subcategory (mercury cell process)

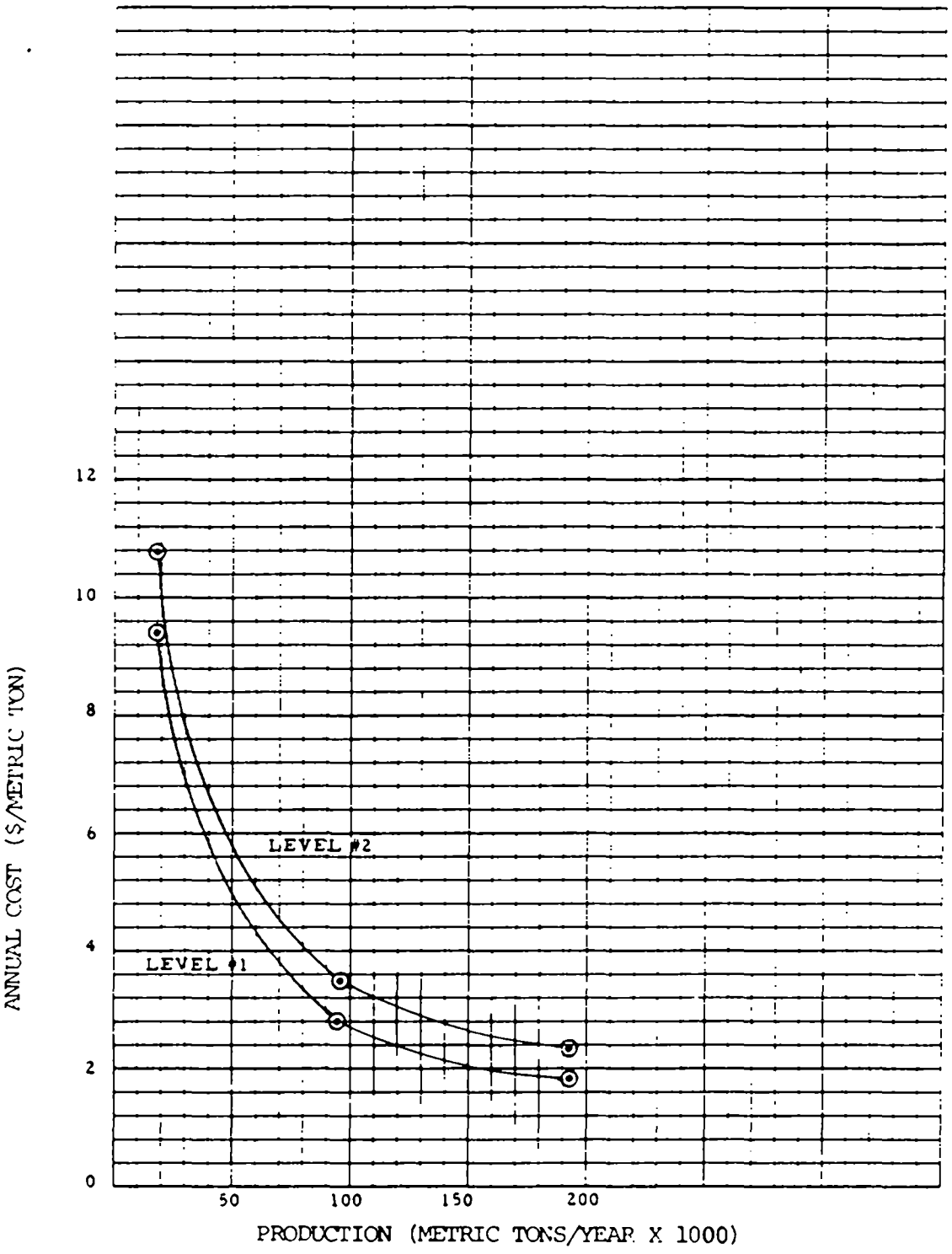

Figure 11-9. Annual unit treatment cost vs. production for the Chlorine Subcategory (Mercury Cell Process)

TABLE 11-11. MODEL PLANT UNIT TREATMENT COSTS

Subcategory CHLORINE Mercury cell

COST ITEM	PRODUCTION (kkg/yr)	FLOW (m^3/day)	Annual Treatment Costs ($/kkg) LEVEL OF TREATMENT FIRST	SECOND*	THIRD	FOURTH
Annual Operation and Maintenance	19,100	91	8.21	1.35	Not Applicable	
	95,500	455	2.18	0.42		
	191,000	910	1.42	0.30		
Annual Amortization	19,100	91	1.50	0.18		
	95,500	455	0.68	0.15		
	191,000	910	0.57	0.14		
Total Cost	19,100	91	9.71	1.53		
	95,500	455	2.86	0.56		
	191,000	910	2.00	0.44		

* = These costs are incremental to first level costs.

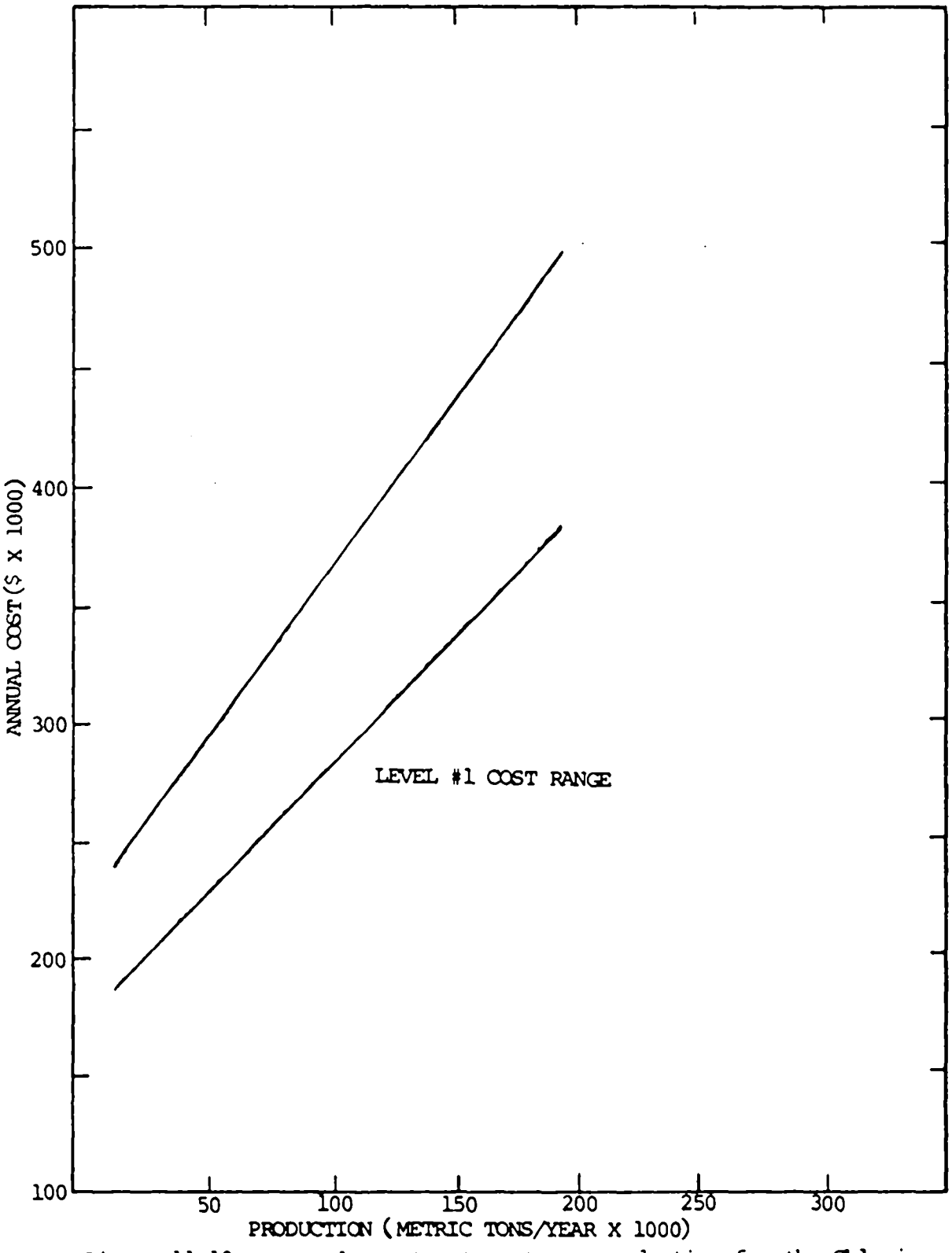

Figure 11-10. Annual treatment cost vs. production for the Chlorine Subcategory (Mercury Cell Process).

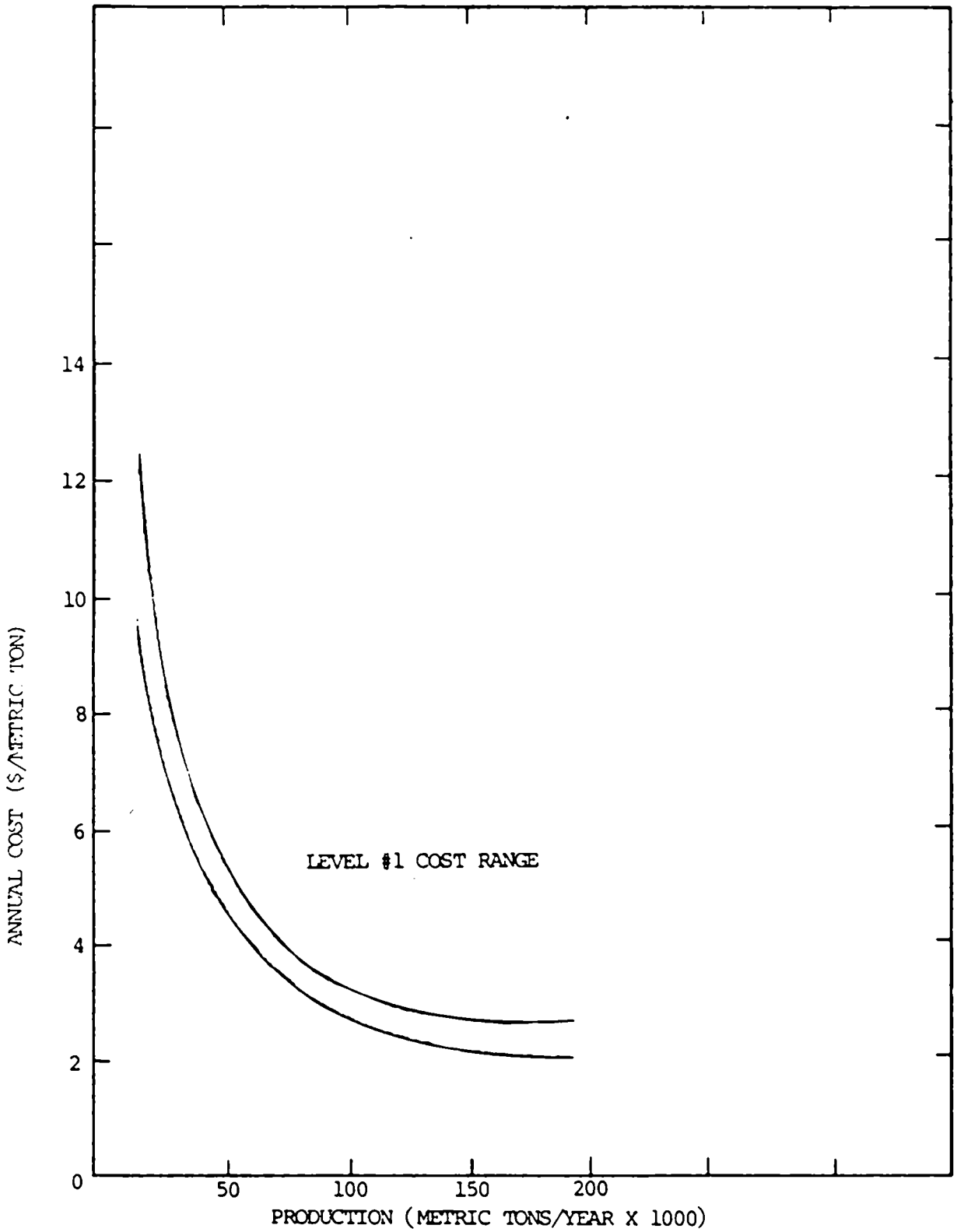

Figure 11-11. Annual unit treatment cost vs. production for the Chlorine Subcategory (Mercury Cell Process).

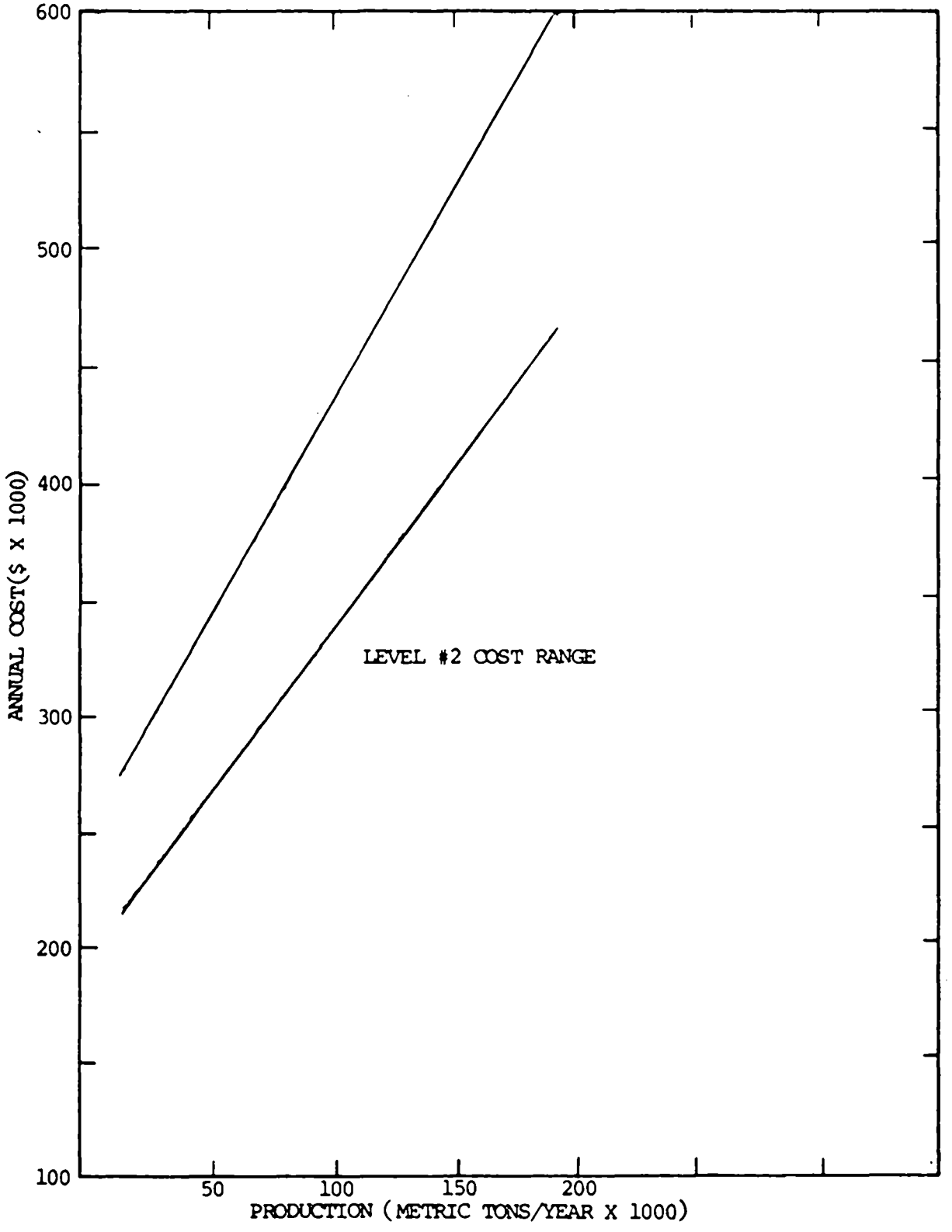

Figure 11-12. Annual treatment cost vs. production for the Chlorine Subcategory (Mercury Cell Process).

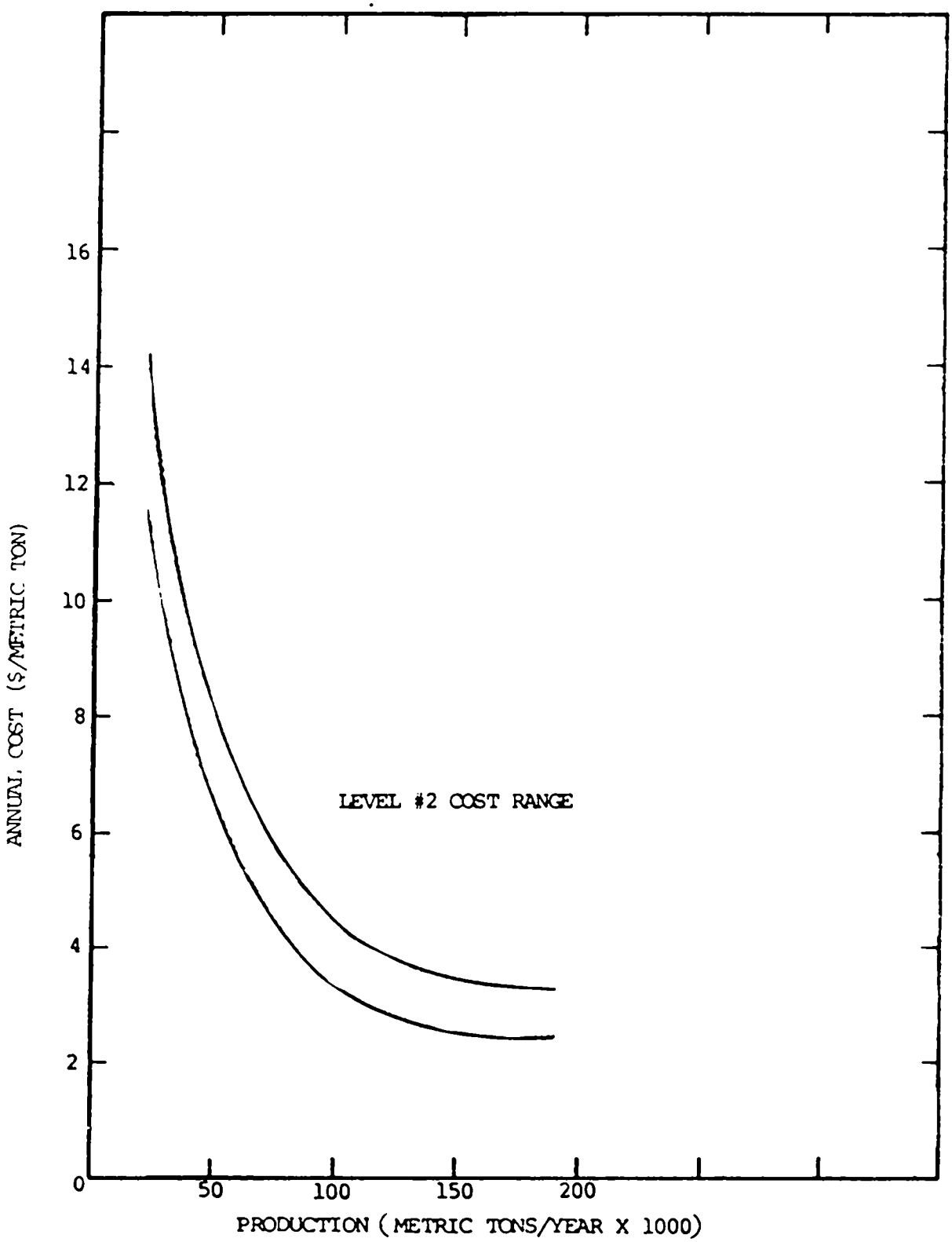

Figure 11-13. Annual unit treatment cost vs. production for the Chlorine Subcategory (Mercury Cell Process).

TABLE 11-12. ESTIMATED CHEMICAL DECHLORINATION COSTS FOR THE CHLOR-ALKALI INDUSTRY

SUBCATEGORY	CHLORINE (MERCURY CELL)		
Chlorine Production (kkg/yr)	19,100	31,850	191,000
A. INVESTMENT COST			
Construction.....	$3,000	$5,000	$10,000
Equipment in place, including piping, fittings, electrical work and controls.....	20,100	35,000	50,000
Monitoring equipment in place.....	--	--	--
Engineering design and inspection.....	4,600	8,000	12,000
Incidentals, overhead, fees, contingencies....	4,600	8,000	12,000
Land.....	--	--	--
TOTAL INVESTMENT COST	$32,200	$56,000	$84,000
B. OPERATING AND MAINTENANCE COST			
Labor and supervision..	14,000	26,000	28,000
Energy.....	500	659	1,220
Chemicals (SO_2).....	1,500	2,000	15,000
Maintenance.....	3,220	5,600	8,400
Taxes and insurance....	966	1,680	2,520
Residual waste disposal.....	--	--	--
Monitoring, analysis, and reporting.....	7,500	7,500	7,500
TOTAL OPERATING AND MAINTENANCE COST	$27,686	$43,439	$62,640
C. AMORTIZATION OF INVESTMENT COST	$5,239	$ 9,111	$13,660
TOTAL ANNUAL COST	$32,925	$52,550	$76,300
COST PER KKG OF PRODUCT (Dollars)	1.72	1.65	0.40

limitations based on available long-term monitoring data. Table 11-13 presents data from eleven mercury cell plants, seven of which are meeting the 30-day average limitations. The other four plants have mercury control technology installed but are not meeting BPT limits.

Flow Basis

The existing regulations contained only load limitations, kg/kkg, and no flow basis or concentration limit was provided. But the regulations did consider the inclusion of noncontact cooling water in determining discharge load limitations.

11.7.2 Basis for Proposed BAT Effluent Limitations

The original BAT limitations for this subcategory required zero discharge of process waste water pollutants. These regulations were remanded and are not in effect. The proposed regulations allow for the discharge of process waste water following treatment.

Technology Basis

Utilizing the cost estimates presented in this report, the Agency has analyzed the cost effectiveness of Level 1 and Level 2 treatment options for pollutant removal. The economic impact on the mercury cell chlorine subcategory has been evaluated in considering the technology basis for proposed BAT limitations.

For BAT, the Agency is proposing limitations based on BPT technology (Level 1) with the addition of dechlorination. Dechlorination is being included in BAT because the toxicity of chlorine to aquatic life is well documented (59) and it is a pollutant of concern to the Agency. Dechlorination, currently practiced at two plants, may be required only at fewer than half of the plants in the subcategory because hypochlorite produced in tail gas scrubbers is often sold or used in other operations while residual chlorine in condensates is usually stripped or recovered. Table 11-14 presents residual chlorine discharges at plants that have reported the use, sale or treatment of chlorine-bearing waste waters. This data indicates that dechlorination technology has not been successfully implemented.

The Agency considered the addition of carbon adsorption for additional mercury removal but rejected its use because of high cost and questionable performance in this industry.

TABLE 11-13. MERCURY DISCHARGES FROM SELECTED CHLOR-ALKALI MERCURY CELL PLANTS*

SUBCATEGORY	CHLORINE (MERCURY CELL)		
	Mercury Waste Load (kg/kkg)		
Plant	Average	Daily Maximum	Maximum 30-day Average
#343	0.000025	0.00094	0.00029
#907	0.000020	0.00026	0.000030
#898	0.000060	0.0025	0.00043
#195	0.000040	0.00073	0.00015
#106	0.000065	0.00022	0.000096
#589	0.000055	0.00086	0.00049
#299	0.000040	0.00019	0.000056
#747**	0.000055	0.000083	0.000065
#317**	0.000006	0.000048	0.000010
#195**	0.000022	0.00066	0.00010
#324**	0.00086	0.0022	0.0018

* See Reference 3

** From Plant Long Term Monitoring Data presented in Appendix A.

TABLE 11-14. RESIDUAL CHLORINE DISCHARGES AT SELECTED CHLOR-ALKALI PLANTS*

Plant	Chlorine Waste Load (kg/kkg) Average	Range
# 207	0.33	1.4 maximum
# 014	0.04	0 to 1.29
# 819	ND	0.016 to 0.14
# 747	0.002	0 to 0.006
# 106	0.001	0 to 0.14
# 589	0.003	0.001 to 0.011
# 747**	0.0025	ND
# 324**	3.72	0.38 to 12.2

*See Reference 3
**From Plant Long Term Monitoring Data

Flow Basis

The flow basis for BAT limitations is 2.1 m3/kkg based on the average of discharge data of 13 plants presented in Table 11-3 The order of magnitude of this unit flow volume was supported by data obtained during sampling visits to five plants at which flows ranged from 0.5 m3/kkg to 5.6 m3/kkg with an average of 1.7 m3/kkg.

Selection of Toxic Pollutants to be Regulated

The selection of pollutants for which specific effluent limitations are proposed was based on the evaluation of raw waste concentrations found during the sampling program and on the treatability of toxic pollutants using BAT technology.

Table 11-15 presents the achievable concentrations of toxic pollutants using the BAT technology of sulfide precipitation followed by filtration. The concentrations, based on literature treatability data presented in Section 8.1 and summarized in Table 8-11, reflect the lowest level achievable by this technology for arsenic, cadmium, copper, lead, nickel, silver and zinc. For antimony, chromium and thallium, literature treatability data are not available for this technology. Also presented in Table 11-15 are the maximum and average raw waste concentrations of toxic pollutants found during the sampling program with an indication of the number of plants where the treatability concentration was exceeded.

Based on the occurrence of treatable levels of specific toxic metals in raw wastes and the fact that the sulfide precipitation technology is already utilized as BPT in the chlorine mercury cell subcategory, arsenic, cadmium, copper, lead, nickel, silver and zinc were selected as additional toxic pollutants proposed for BAT regulations. Antimony, chromium and thallium were included for guidance but no limits are proposed because concentrations found in the raw waste load were below treatable levels.

Basis of Pollutant Limitations

Limitations are presented as both concentrations (mg/l) and loads (kg/kkg) for each pollutant. The relationship between the two is based on the unit flow rate. Although actual unit flow rates at plants vary by an order of magnitude due to such factors as raw materials and plant control practices, the Agency has determined that the load limitations can be met by well-operated treatment facilities. The concentration or quality limits are included below.

BAT proposed limitations are presented in Table 11-16.

TABLE 11-15. COMPARISON OF RAW WASTE CONCENTRATIONS OF TOXIC POLLUTANTS WITH TREATABILITY

SUBCATEGORY	CHLORINE (MERCURY CELL)			
Pollutant	Treatability[1] (mg/l)	Maximum Plant Average (mg/l)	Average of 5 Plants (mg/l)	Number Plants out of Five Exceeding Treatability Level
Antimony	--[2]	0.49	< 0.28	--[2]
Arsenic	0.05	0.33	0.14	3
Cadmium	0.01	0.46	0.11	3
Chromium	--[2]	0.12	0.075	--[2]
Copper	0.05	1.2	0.41	5
Lead	0.10	1.4	0.40	3
Nickel	0.05	1.4	0.35	2
Silver	0.05	0.58	0.15	2
Thallium	--[2]	0.38	0.17	--[2]
Zinc	0.20	20	4.4	4

(1) Literature-based treatability estimates from Section 8.1. Table 8-11, given as the lower limit of treatability expressed as a 30-day average.

(2) No data available on treatability with sulfide/filter.

TABLE 11-16. PROPOSED LIMITATIONS

Chlorine - Mercury Cell
Best Available Technology
Waste Water Flow: 2.1 m^3/kkg

SUBCATEGORY	CHLORINE MERCURY CELL					
			Concentration Basis		Effluent Limit	
Pollutant	Subcategory Performance (mg/l)	VFR[1]	Max (mg/l) 30-day avg.	24-hour max.	Max (kg/kkg) 30-day avg.	24-hour max.
Nonconventional Pollutants:						
Total Residual Chlorine(6)	0.2	1.7	0.20	0.34	0.00042	0.00071
Toxic Pollutants						
Antimony[5]	0.23[3]	2.2	0.23	0.51	--[4]	--[4]
Arsenic[5]	0.10[3]	2.2	0.10	0.22	0.00021	0.00046
Cadmium[5]	0.050[3]	2.2	0.050	0.11	0.00011	0.00024
Chromium[5]	0.040[3]	2.2	0.040	0.088	--[4]	--[4]
Copper[5]	0.050[2]	2.2	0.050	0.11	0.00011	0.00024
Lead[5]	0.16[3]	2.2	0.16	0.35	0.00034	0.00075
Mercury[5]	0.020[2]	2.2	0.048	0.10	0.00010	0.00022
Nickel[5]	0.10[2]	2.2	0.10	0.22	0.00021	0.00046
Silver[5]	0.070[3]	2.2	0.070	0.15	0.00015	0.00032
Thallium[5]	0.17[3]	2.2	0.17	0.37	--[4]	--[4]
Zinc[5]	0.15[3]	2.2	0.15	0.33	0.00032	0.00070

(1) VFR, the variability factor ratio, is the ratio of the variability factor for daily measurements to the variability factor for 30-day average.

(2) Lower limit of treatability for sulfide/filter technology according to literature treatability data (Table 8-11).

(3) Average effluent concentration from verification sampling.

(4) No load limits proposed; concentration limits are provided for guidance purposes.

(5) Limits are also applicable to PSES and PSNS and NSPS.

(6) Limits are also applicable to NSPS.

Chlorine - Total residual chlorine limits are based on data transfer from the utility industry (58) and the detectable concentration of chlorine (0.2 mg/l) because treatment should remove essentially all chlorine. Thus the maximum 30-day average concentration limit was set at 0.20 mg/l.

The daily maximum limit for total residual chlorine was set at 0.34 mg/l based on an evaluation of long-term monitoring data for total residual chlorine as presented in Appendix A (Table A-1a and c). The ratio of 24-hour maximum variability factors to 30-day average variability factors for two plants was 1.7, thus:

$$VFR = \frac{2.28}{1.38} = 1.7$$

$$\left(\frac{0.20 \text{ mg/l}}{\text{30-day average limit}}\right)\left(\frac{1.7}{\text{24-hour maximum limit}}\right) = 0.34 \text{ mg/l}$$

The determination of load limitations for total residual chlorine (kg/kkg) was calculated based on the unit flow rate of 2.1 m3/kkg, thus:

$$(0.20 \text{ mg/l})\ (2.1 \text{ m3/kkg})(\text{kg/m}) = \frac{0.00042 \text{ kg/kkg}}{1000 \text{ mg/l}}$$

for the 30-day average limit. The 24-hour maximum limit was calculated similarly, i.e.,

$$(0.34 \text{ mg/l})(2.1 \text{ m3/kkg})\left(\frac{\text{kg/m3}}{1000 \text{ mg/l}}\right) = 0.00071 \text{ kg/kkg}$$

Mercury - The proposed BAT limitations for mercury, although based on the same technology, are more stringent than BPT limitations. Dechlorination does not affect mercury removal. The Agency considered the following data in establishing the BAT limits of 0.00010 kg/kkg for a maximum 30-day average.

- Half of the plants with monitoring data presented in Table 11-13 are meeting the limits.
- Three of five plants were meeting the limits during sampling of their wastes.
- Three of four plants with long-term monitoring data presented in Appendix A are meeting the limits.

The daily maximum limit of 0.00022 kg/kkg for mercury was based on an evaluation of long term monitoring data from four

plants presented in Appendix A. The average variability factor ratio for the four plants was 2.2. Thus:

$$(0.00010 \text{ kg/kkg})\ (2.2) = 0.00022 \text{ kg/kkg}$$

The concentration limitations for mercury were then calculated based on the unit flow rate of 2.1 m3/kkg. That is:

$$(0.00010 \text{ kg/kkg}) \left(\frac{1000 \text{ mg/l}}{\text{kg/m3}}\right) (2.1 \text{ m3/kkg}) = 0.048 \text{ mg/l}$$

$$\text{and } (2.2)(0.048 \text{ mg/l}) = 0.11 \text{ mg/l}$$

respectively for the maximum 30-day average and 24-hour maximum.

Additional Toxic Pollutants - The effluent limitations proposed for the selected additional toxic pollutants were derived from two sources of information; sampling data and literature-based treatability estimates. Dechlorination does not affect toxic metals removal.

The results of analysis of treated effluent represents plant performance observed during three days of sampling. The effluent data for toxic pollutants found above treatable concentations in raw wastes are summarized in Table 11-17. Data are presented from four plants practicing BPT technology (sulfide precipitation followed by filtration). Sampling data for the fifth plant, #299, reflect effluent quality prior to filtration.

It is apparent from the sampling data that the BAT technology systems are generally achieving higher quality effluents than treatability literature indicates. This could be a reflection of low influent concentrations and incidental removal of metals, which indicate that applying effluent limitations to a dominant metal pollutant (mercury) assures effective control of other metals.

The concentration bases for the proposed limitations are derived from average effluent sampling unless the observed concentration was below the literature treatability level. In such cases the lowest applicable treatability level from Table 8-11 was used. Because long-term monitoring data from mercury cell chlorine plant effluents was not available for these metals, the variability factor ratio established for mercury limits (2.2) was also applied to these metals. The VFR used in the existing regulations (2) agrees with this.

A. Arsenic: Because the sampling data from five plants (Table 11-17) indicated an achievable average arsenic

TABLE 11-17. EFFLUENT CONCENTRATIONS OF TOXIC POLLUTANTS FROM VERIFICATION SAMPLING

SUBCATEGORY	CHLORINE (MERCURY CELL)						
Pollutant	Plant Effluent Concentrations (mg/l) Plant						Treatability[1] (mg/l)
	#299	#747	#317	#106	#167	Avg.	
Antimony	0.15	<0.25	<0.25	<0.45	<0.065	<0.23	(2)
Arsenic	0.063	<0.010	0.020	<0.005	0.38	<0.096	0.05
Cadmium	0.073	0.120	<0.025	0.016	0.010	<0.050	0.01
Chromium	<0.06	<0.05	<0.05	<0.01	<0.050	<0.044	(2)
Copper	0.038	<0.025	<0.030	0.043	<0.025	<0.033	0.05
Lead	<0.050	0.073	0.170	0.38	0.12	<0.16	0.10
Mercury	0.029	0.10	0.19	<0.0005	0.32	<0.13	0.01
Nickel	<0.050	<0.050	<0.067	0.140	<0.050	<0.074	0.10
Silver	<0.015	<0.015	<0.015	0.260	<0.015	<0.067	0.05
Thallium	0.20	<0.045	<0.25	0.26	0.090	<0.17	(2)
Zinc	0.100	<0.025	0.510	0.088	<0.025	<0.15	0.02

(1) Lower limit from literature-based treatability estimates from Section 8.1.

(2) No data available for treatability with sulfide/filter.

concentration of less than 0.096 mg/l, this value, rounded to 0.10 mg/l, is supported by the estimated range of treatability from Table 8-11 and was selected in the concentration basis for the proposed maximum 30-day average limitation. This effluent limitation is:

$$(0.10\ mg/l)(2.1\ m3/kkg)\left(\frac{kg/m3}{1000\ mg/l}\right) = 0.00021\ kg/kkg$$

and the proposed daily maximum arsenic limitation is obtained by applying the VFR value of 2.2 that is:

$$(2.2)(0.00021\ kg/kkg) = 0.00046\ kg/kkg$$

B. Cadmium: For cadmium, the plant sampling data indicated an achievable average concentration of less than 0.050 mg/l in the sulfide/filter treated effluent. This falls well within the range of published treatability values (Table 8-11) and was used as the concentration basis for the proposed 30-day average effluent limitations. Thus:

$$(0.050\ mg/l)(2.1\ m3/kkg)\left(\frac{kg/m3}{1000\ mg/l}\right) = 0.00011\ kg/kkg$$

for the maximum 30-day average and using the VFR value of 2.2, the proposed daily maximum is:

$$(2.2)(0.00011\ kg/kkg) = 0.00024\ kg/kkg$$

C. Copper: In the case of copper, the average plant performance derived from sampling data (Table 11-17) showed an effluent concentration of less than 0.033 mg/l which is slightly below the accepted lower limit of treatability based on literature data. The latter is approximately 0.050 mg/l and was selected as the concentration basis for the proposed maximum 30-day average limitation on copper. Thus:

$$(0.050\ mg/l)(2.1\ m3/kkg)\left(\frac{kg/m3}{1000\ mg/l}\right) = 0.00011\ kg/kkg$$

and the proposed daily maximum limitation is obtained by applying the VFR value of 2.2, that is:

$$(2.2)(0.00011\ kg/kkg) = 0.00024\ kg/kkg$$

D. Lead: The proposed maximum 30-day average limitation for lead is based on sampling data shown in Table 11-17 which indicate and achievalbe effluent concentration of less than 0.16 mg/l. Thus:

$$(0.16\ mg/l)(2.1\ m3/kkg)\left(\frac{kg/m3}{1000\ mg/l}\right) = 0.00034\ kg/kkg$$

and, applying the VFR value of 2.2, the proposed daily maximum limitation is:

$$(2.2)(0.00034\ kg/kkg) = 0.00075\ kg/kkg$$

E. Nickel: The average plant effluent concentration of less than 0.074 mg/l of nickel is slightly less than the accepted lower limit of treatability (0.10 mg/l) based on literature data. This lower limit of 0.10 mg/l was selected as the concentration basis for the proposed maximum 30-day average limitation for nickel. Thus:

$$(0.10\ mg/l)(2.1\ m3/kkg)\left(\frac{kg/m3}{1000\ mg/l}\right) = 0.0021\ kg/kkg$$

and the proposed daily maximum limitation is obtained by applying the VFR value of 2.2, that is:

$$(2.2)(0.00021\ kg/kkg) = 0.00046\ kg/kkg$$

F. Silver: For silver, the average effluent data indicated an achievable concentration of less than 0.067 mg/l. This is within the range of published treatability values (Table 8-11) and is used as the concentration basis for the proposed 30-day average effluent limitation. Thus:

$$(0.067\ mg/l)(2.1\ m3/kkg)\left(\frac{kg/m3}{1000\ mg/l}\right) = 0.00014\ kg/kkg$$

and the proposed daily maximum limitation derived from the VFR value is 2.2 is:

$$(2.2)(0.00014\ kg/kkg) = 0.00031\ kg/kkg$$

G. Zinc: The average plant effluent for zinc is less than 0.15 mg/l. This is greater than the accepted lower limit of treatability which is approximately 0.02 mg/l. The observed performance level of 0.15 mg/l is used as the concentration basis for the proposed maximum 30-day average limitation of zinc. Thus:

$$(0.15\ mg/l)(2.1\ m3/kkg)\left(\frac{kg/m3}{1000\ mg/l}\right) = 0.00032\ kg/kkg$$

and the proposed daily maximum limitation is obtained by applying the VFR value of 2.2, that is:

(2.2)(0.00032) = 0.00070 kg/kkg

H. Antimony and Thallium: The sampling data indicate an average effluent concentration of less than 0.23 mg/l antimony and less than 0.17 mg/l thallium. These relatively high concentrations are the result of analytical difficulties with some samples which gave high "less than" results. Because of this and the fact that no data are available for the treatability of antimony or thallium with sulfide/filter, these concentrations are being offered as 30-day average maximum limitations for guidance purposes only.

I. Chromium: The sampling data indicate that plants are achieving effluent concentrations of less than 0.044 mg/l chromium. Because no data is available for the treatability of chromium with sulfide/filter, this concentration is used as the basis for the proposed maximum 30-day average limitation. Since there is no treatability data, the limitation is being offered as guidance and no load limitations (kg/kkg) are presented.

11.7.3 Basis for Proposed BCT Effluent Limitations

The BCT limitation (applicable only to TSS) was set equal to BPT because the treatment technology for BAT is the same as for BPT except for dechlorination. Dechlorination does not affect conventional pollutants.

11.7.4 Basis for New Source Performance Standards

For NSPS, the Agency is proposing limitations equal to BPT for TSS and BAT for other pollutants because of the prohibitive cost of additional technology. Pollutants to be limited are pH, TSS, mercury, arsenic, cadmium, copper, lead, nickel, silver, zinc and total residual chlorine.

11.7.5 Basis for Proposed Pretreatment Standards

For pretreatment standards for new and existing sources, the Agency is proposing limitations based on BAT technology excluding dechlorination. Dechlorination is unnecessary for discharges to POTWs because chlorination of influent to treatment works is common. Pollutants to be limited are pH, mercury, arsenic, cadmium, copper, lead, nickel, silver and zinc.

11.8 DIAPHRAGM CELL PROCESS INDUSTRY PROFILE

11.8.1 General Description

Approximately 65 percent of the U.S. production of chlorine is by diaphragm cell plants. Of 40 known plants, 308 data are available for 19. Table 11-18 presents a summary profile of the subcategory. Table 11-19 presents the current status of discharge regulations for diaphragm cell chlorine plants.

11.8.2 General Process Description

Brine System

As in the mercury cell process, the sodium chloride solution (brine or salt dissolved in water) is purified before it is sent to the electrolytic cells. Precipitation of major impurities with sodium carbonate and sodium hydroxide followed by clarification generates a brine mud waste which is then sent to a lagoon or filtered. The settled brine is saturated further by the addition of salt from caustic evaporators and then is sent to the cells.

The fundamental difference between diaphragm and mercury cell brine systems is that unconverted sodium chloride in diaphragm cell processes is carried with the sodium hydroxide (caustic) from the cell and is then removed as a solid in caustic evaporators. In mercury cells the unconverted sodium chloride is discharged as a spent brine from the cell and recycled directly through the brine system.

Diaphragm Cell

The treated brine solution is electrolyzed in the diaphragm cell to form chlorine, hydrogen, and sodium hydroxide according to the reaction:

$$2NaCl + 2H_2O = Cl_2 + 2NaOH + H_2$$

The diaphragm cell contains a porous asbestos diaphragm separating the anode from the cathode. Chlorine is liberated at the anode and hydrogen and hydroxyl ions (caustic) are produced at the cathode. In the past, the predominant material used for anodes was graphite with lead used to provide an electrical contact and support. The lead was joined to the graphite anode by an organic binder. In recent years, many graphite anodes have been replaced by stabilized metal anodes made of titanium with a platinum or ruthenium oxide coating. (An industry association estimate is that approximately 49 percent of U.S. diaphragm cell capacity still involves graphite anodes.) The

TABLE 11-18. SUBCATEGORY PROFILE DATA SUMMARY

SUBCATEGORY	CHLORINE (DIAPHRAGM CELL)
Total subcategory capacity rate	8,272,600 kkg/year
Total subcategory production rate	6,427,000 kkg/year
Number of plants in this subcategory	40
308 Data on file for	19
With total capacity of	6,397,000 kkg/year
With total production of	4,200,000 kkg/year
Representing capacity	77 percent
Representing production	66 percent
Plant production range:	
Minimum	14,700 kkg/year
Maximum	1,500,000 kkg/year
Average production	221,000 kkg/year
Median production	103,000 kkg/year
Average capacity utilization	67 percent
Plant age range:	
Minimum	4 years
Maximum	74 years
Waste water flow range:	
Minimum	1,100 cubic meters/day
Maximum	7,100 cubic meters/day
Volume per unit product:	
Minimum	1 cubic meters/kkg
Maximum	23 cubic meters/kkg

Sources of data are Stanford Research Institute, Directory of Chemical Producers, U.S.A., 1977, U.S. Department of Commerce, Current Industrial Reports, December 1977; Energy and Environmental Analysis, Inc.; Draft Report, "Preliminary Economic Assessment of Effluent Limitations in the Inorganic Chemical Industry," June, 1978 and "Economic Analysis of Proposed Revised Effluent Guidelines and Standards for the Inorganic Chemicals Industry," March, 1980.

TABLE 11-19. STATUS OF REGULATIONS - EFFLUENT LIMITATION GUIDELINES

SUBCATEGORY CHLORINE (DIAPHRAGM CELL)

SUBPART F (40 CFR 415.60, 3/12/74)

		STANDARDS					
		BPCTCA		BATEA		NSPS	
Product Process	Parameters	Max.[1] kg/kkg (mg/l)	Avg.[2] kg/kkg (mg/l)	Max. kg/kkg (mg/l)	Avg. kg/kkg (mg/l)	Max. kg/kkg (mg/l)	Avg. kg/kkg (mg/l)
Diaphragm Cell Process	TSS	0.64	0.32	No discharge of pwwp		0.64	0.32
	Pb	0.005	0.0025	No discharge of pwwp		0.00008	0.00004

*Section 415.63 was remanded and is presently reserved (41 FR 51601, November 23, 1976).

[1]Max. = Maximum of any one day.

[2]Avg. = Maximum of daily values for thirty consecutive days.

[3]pwwp = Process waste water pollutant.

advantages of using metal anodes compared to graphite anodes are increased power efficiency of the cells, longer anode life and a reduction in potential pollutant loads of lead and chlorinated organics.

Product Purification

As with mercury cell plants, chlorine liberated at the anode must be cooled and dried to remove moisture and other impurities. The cooling generates a chlorine condensate stream which can be stripped to recover chlorine then returned to the brine system or discharged. Drying the chlorine gas is accomplished by scrubbing with sulfuric acid. The resulting diluted acid can subsequently be regenerated, sold or used for pH control. When the chlorine gas is compressed and liquified, noncondensible gases known as tail or sniff gases remain. These are usually scrubbed with caustic soda or lime generating a hypochlorite solution which can be sold, used on-site or discharged, with or without decomposition or treatment.

The sodium hydroxide or caustic from the diaphragm cell has a concentration of about 14 percent NaOH and a sodium chloride content as high as 17 percent. The caustic is usually filtered to remove some of the impurities and then evaporated to 50 percent NaOH by multiple effect evaporators. Sodium chloride remains as a solid salt which is then returned to the brine system. Further purification of the caustic is necessary for some applications (such as rayon production) and extraction or adsorption techniques have been used to remove small amounts of impurities. The caustic can be evaporated further if more concentrated products are required. The vapor evolved from the last of multiple effect evaporators is condensed in barometric condensers generating contact cooling water, or in surface condensers using noncontact cooling water.

The hydrogen gas generated in the process can be vented or cooled by refrigeration to remove water vapor before sale or use as a fuel.

Figure 11-14 is a general flow diagram for the manufacture of chlorine by the diaphragm cell process.

11.9 WATER USE AND WASTE WATER SOURCES

11.9.1 Water Use

Water use at diaphragm cell plants is similar to that at mercury cell plants with one exception. Common uses include noncontact cooling, tail gas scrubbers, cell wash, equipment

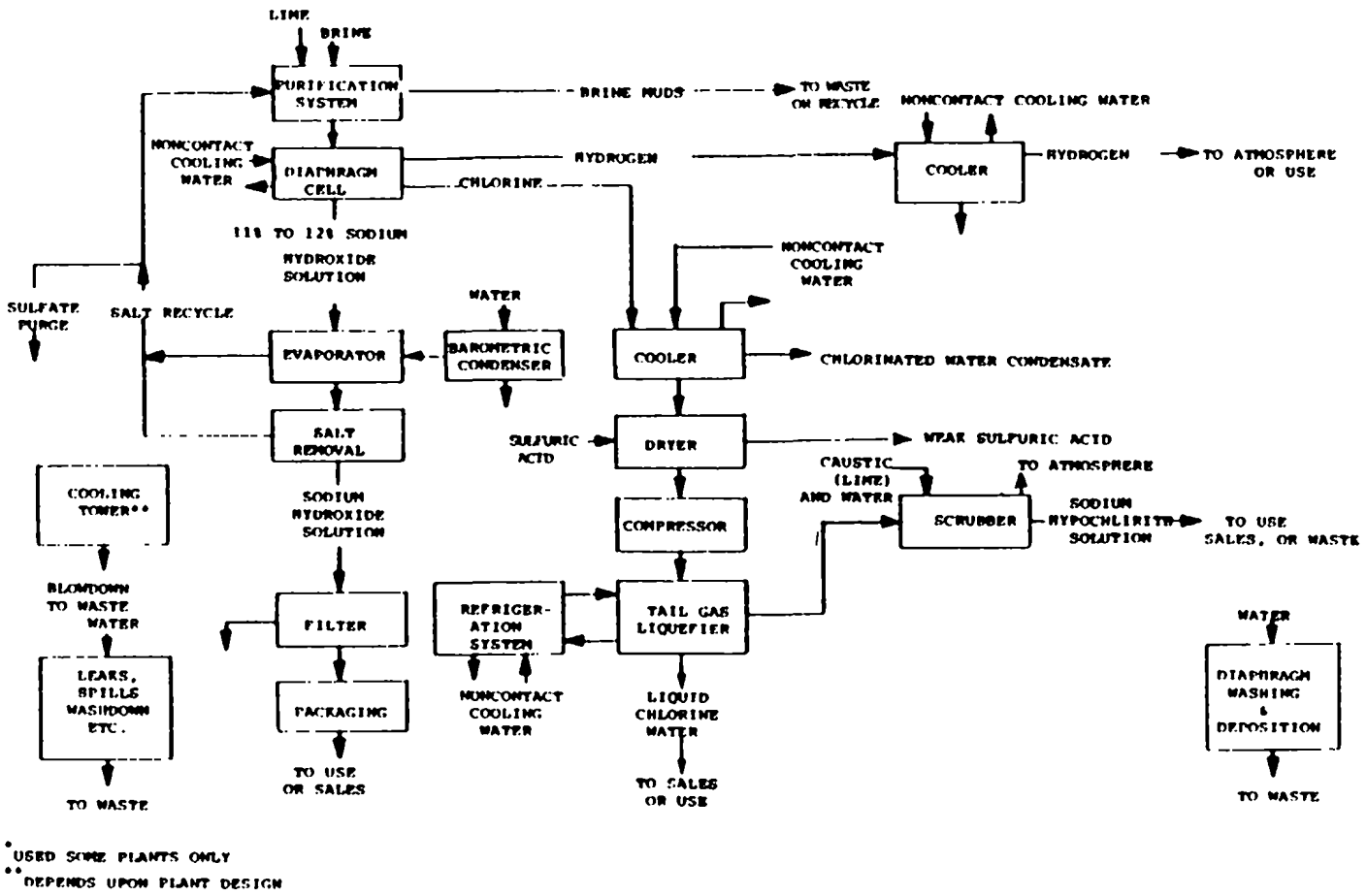

*USED SOME PLANTS ONLY
**DEPENDS UPON PLANT DESIGN

Figure 11-14. General process flow diagram for production of chlorine/caustic by diaphragm cells.

maintenance, floor washings and filter backwashing. The exception at diaphragm cell plants is the use of water for barometric condensers in the evaporation of caustic.

11.9.2 Waste Sources

Brine Mud

As with mercury cells, this is the waste produced during purification of brine before it is introduced into the cells for electrolysis. It consists of precipitated hydroxides and carbonates of calcium, magnesium, iron, and other metals. The mud can be a major source of solid waste depending on the purity of the raw salt used. At diaphragm cell plants brine muds are filtered or settled in lagoons. The solids are landfilled and the filtrate or overflow is discharged or recycled to the brine system.

Brine mud is the major source of solid waste at chlorine plants, and discharges range from 0.04 to 1.5 cubic meters per metric ton (m3/kkg), with a solids content of from two to 20 percent.

Cell Room Wastes

These wastes include leaks, spills, area washdown and cell wash waters. At diaphragm cell plants cell wash waters are heavily laden with asbestos and are therefore settled and/or filtered before chemical treatment or discharge. At plants using graphite anodes in the cells, the cell room wastes also contain lead. Data from diaphragm cell plants indicate a waste flow from 0.02 to 1.2 m3/kkg from cell room operations.

Chlorine Cooling Condensate

Condensation from the indirect cooling of cell gas is contaminated with chlorine. The chlorine is removed (stripped) or recovered from the stream before discharge or recycle. Condensate flows from three plants range from 0.16 to 0.9 m3/kkg.

Spent Sulfuric Acid

Concentrated sulfuric acid is used to dry chlorine gas after the first stage of cooling. Once diluted to 50 to 70 percent, the spent acid can be regenerated, sold or used for pH control.

Tail Gas Scrubber Liquid

The uncondensed chlorine gas from the liquefaction stage is scrubbed with sodium or calcium hydroxide producing the corresponding hypochlorite. The hypochlorite can be used in other processes, sold, decomposed, or discharged. The amount of tail gas scrubber water generated at diaphragm cell plants ranges from 0.1 to 0.29 m3/kkg.

Filter Backwashes

Backwashing of filters used to treat brine before it is sent to the cells at one graphite anode diaphragm cell plant generated a waste water flow of 0.45 m3/kkg. Backwashing of filters used to clarify caustic product at the same plant resulted in an average flow of 5.4 m3/kkg. At some diaphragm cell plants these waste waters are partially recycled to process.

The relatively high flow of caustic filter backwash is due to the need to remove sodium sulfate, an impurity in the caustic. Sulfate ions, if allowed to accumulate in the brine system at graphite anode plants will interfere with cell performance.

Hydrogen Condensate

Cooling of hydrogen gas for use or sale produces a condensate stream which can be discharged. Although no data are available on the volume of this flow, it is small.

Barometric Condenser Waste Water

When vapors from caustic evaporators are contact-cooled, a significant amount of waste water can be generated. Flows of from 90 to 300 m3/kkg have been reported at facilities where barometric condenser water is "once through" and not recirculated. Recirculation of barometric condenser water requires a cooling step and a blowdown discharge. A number of facilities are accomplishing this with a corresponding reduction in water use. The necessary blowdown of recirculating barometric condenser waste water at two plants ranges from a flow of 0.82 m3/kkg to 0.89 m3/kkg.

Summary of Waste Water Flows

Table 11-20 summarizes unit waste water flow data available by specific sources. A separate list of flows at one graphite anode plant is presented to compare waste water generation between metal anode and graphite anode plants.

TABLE 11-20. WASTE WATER FLOWS AT DIAPHRAGM CELL CHLORINE PLANTS

Stream Description	Flow (m^3/kkg) Plants with Metal Anodes			Plant with Graphite Anode
	min.	avg.	max.	
Cell room wastes and cell wash	0.02	0.38	0.67	1.2
Chlorine Condensate	0.16	0.49	0.90	0.78
Spent Sulfuric Acid		0.01		NA
Tail Gas Scrubber	0.10	0.17	0.29	0.11
Caustic Filter Wash		NA		5.4
Brine Filter Backwash		NA		0.45
Caustic Cooling Blowdown	0.82	0.86	0.89	NA
Brine Mud	0.04	0.42	1.5	NA

NA: Not Available

11.10 DESCRIPTIONS OF SPECIFIC PLANTS

The following descriptions of plants includes those plants that were sampled during the screening and verification program. The discussion primarily covers plant practices in waste water control and treatment. Plants were selected for screening and verification sampling because they were representative of the industry in that they included a wide range of sizes and variation in process detail.

11.10.1 Screening

At Plant #014, visited during the screening program, the chlorine condensate is stripped with steam to remove and recover chlorine. Brine precipitates (muds) are land disposed, while the spent sulfuric acid and scrubber solutions are used at an adjacent plant. The condensate from the hydrogen cooler is used as makeup water for a cooling tower system, and the condensate from the evaporative concentration of sodium hydroxide is used to dissolve salt reclaimed from the concentration process. The cell washings are sent to a collection pond where asbestos and other suspended solids are removed. In Figure 11-15 the general process flow sheet is presented. The waste streams sampled and their waste loadings are presented in Table 11-21.

11.10.2 Verification

Four plants were visited and their waste streams sampled during the verification program. The results of analysis of the waste waters are presented in Table 11-21.

At Plant #261, the cathode wash water is passed through a filter and the asbestos drummed and disposed of in an off-site landfill, while the filtrate goes to the sewer. Brine purification muds at this facility are utilized for their alkalinity on-site and then they are settled prior to discharge of the supernatant. Spent sulfuric acid is used for neutralization of waste waters. Dechlorination of the drying acid by reaction with sodium bisulfite is planned in the near future. Figure 11-16 shows the process flow diagram and sampling points.

Plant #738 has two production lines, 738A and 738B, that are almost identical. At the new plant (738B) the NaOH is not concentrated nor is the waste from the chlorine disposal system scrubbed. In addition, the inert gases from the liquefaction step are put through the chlorine disposal system. The process flow sheets are shown in Figures 11-17 and 11-18.

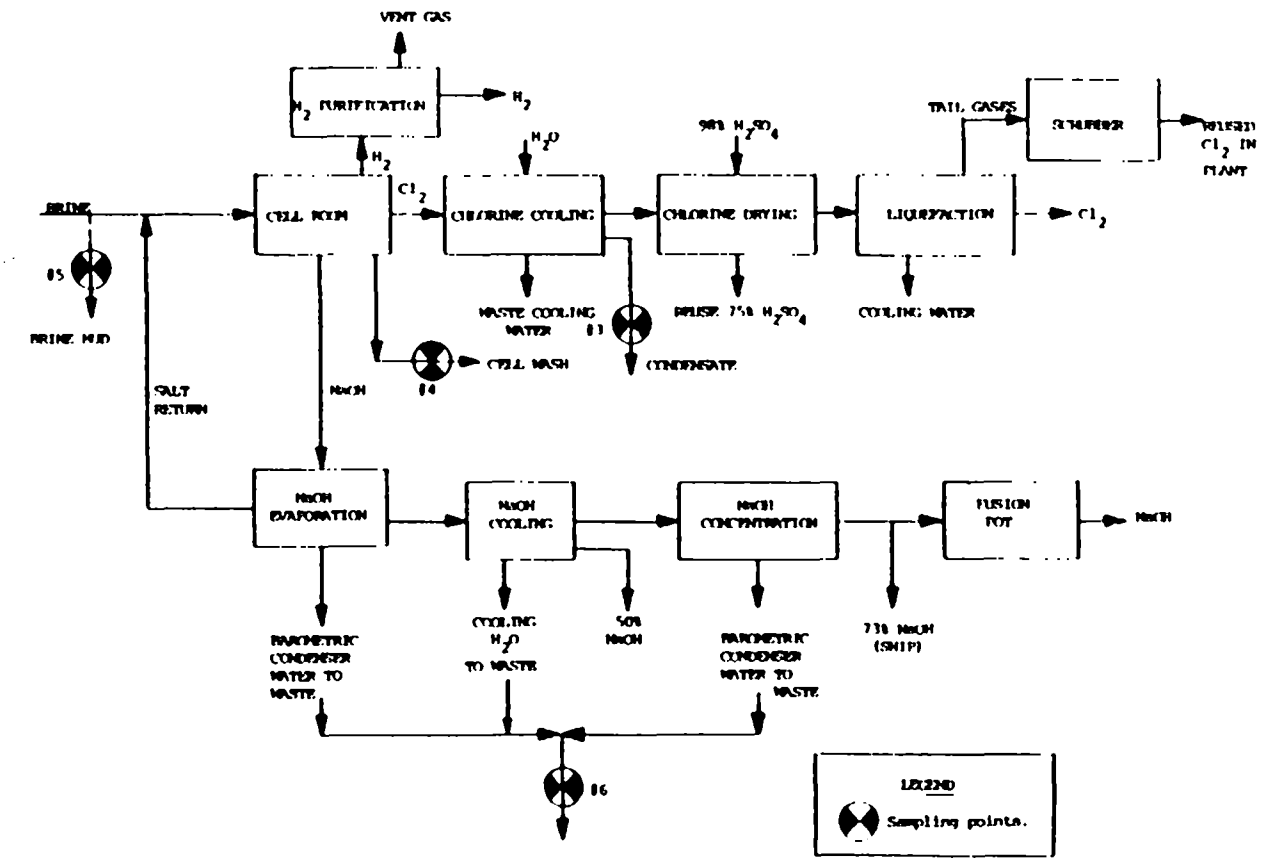

Figure 11-15. General process flow diagram at plant #014 showing the sampling points. Chlorine/caustic (diaphragm cell) manufacture.

TABLE 11-21. POLLUTANT CONCENTRATIONS AND LOADS AT SCREENING AND VERIFICATION PLANTS

SUBCATEGORY CHLORINE DIAPHRAGM CELL

Plant & Stream No.	Stream Description	TSS (mg/l)	TSS (kg/kkg)	Lead (mg/l)	Lead (kg/kkg)
#014					
3	Cl_2 condensate	.2	1.4×10^{-3}	0.0055	5.0×10^{-6}
4	Cell wash	1600	2.4×10^{-2}	0.26	3.9×10^{-6}
5	Brine mud	NA	NA	0.72	1.3×10^{-5}
6	Bar. condenser	7	3.6	0.005	1.5×10^{-3}
#261					
1	Brine mud	NA	NA	0.36	3.0×10^{-4}
2	Cell wash	4800	1.8×10^{-1}	2.0	7.6×10^{-5}
3	Asbestos filtrate	9	NA	0.075	NA
4	Filter cake	NA	NA	42	NA
5	Bar. condenser	6	NA	< 0.010	NA
#738A1	Cell room waste	27	1.4×10^{-3}	0.077	3.9×10^{-6}
2	Asbestos wash	57	7.0×10^{-3}	0.031	3.8×10^{-6}
3	Hypo scrubber	290	2.7×10^{-2}	0.18	1.7×10^{-5}
4	Cl_2 cooling water	35	2.2×10^{-1}	0.28	1.3×10^{-4}
5	Caustic cooling tower	48	4.3×10^{-2}	0.51	4.5×10^{-4}
#738B6	Cell room waste	95	4.5×10^{-3}	0.067	3.2×10^{-6}
7	Asbestos wash	72	8.3×10^{-3}	0.13	1.5×10^{-5}
8	Hypo scrubber	160	1.4×10^{-2}	0.20	1.7×10^{-5}
9	Cl_2 cooling water	20	1.7×10^{-2}	0.20	1.7×10^{-5}
10	Caustic cooling tower	4.7	3.8×10^{-3}	< 0.010	$< 8.2 \times 10^{-6}$
11	Chlorate sump	32.	7.0×10^{-3}	< 0.010	$< 2.3 \times 10^{-6}$
12	Plant effluent(B)	63	5.7×10^{-1}	0.12	1.1×10^{-3}
13	Final effluent (Total)	58	NA	0.078	NA
14	Brine mud	270	NA	0.10	NA

(Continued)

TABLE 11-21 (continued)

Plant & Stream No.	Stream Description	TSS (mg/l)	TSS (kg/kkg)	Lead (mg/l)	Lead (kg/kkg)
#736					
1	Cell wash	934	6.0×10^{-2}	0.014	9.1×10^{-6}
2	Cell room drain	283.5	4.6×10^{-3}	0.17	2.8×10^{-6}
3	Brine mud	20,000	33	0.019	3.1×10^{-5}
4	50% Bar. condenser	32	NA	0.010	NA
5	70% Bar. condenser	21	NA	0.010	NA
6	95% Bar. condenser	90.33	NA	0.010	NA
7	Chlorine condensate	2.4	3.9×10^{-4}	0.010	1.6×10^{-6}
#967 1	Cell bldg wastes	1000	1.8×10^{-1}	680	1.2×10^{-1}
2	Lead pond effluent	54	3.0×10^{-2}	29	1.6×10^{-2}
3	Caustic backwash	160	8.6×10^{-1}	0.32	1.7×10^{-3}
4	Brine backwash	13,000	5.8	0.52	2.3×10^{-4}
5	Cell wash	310	5.6×10^{-2}	48	8.6×10^{-3}
6	Condensate and H_2SO_4	1100	8.7×10^{-1}	0.92	7.3×10^{-4}
7	Scrubber waste	270	1.2×10^{-2}	0.67	2.9×10^{-5}

NA: Not Available

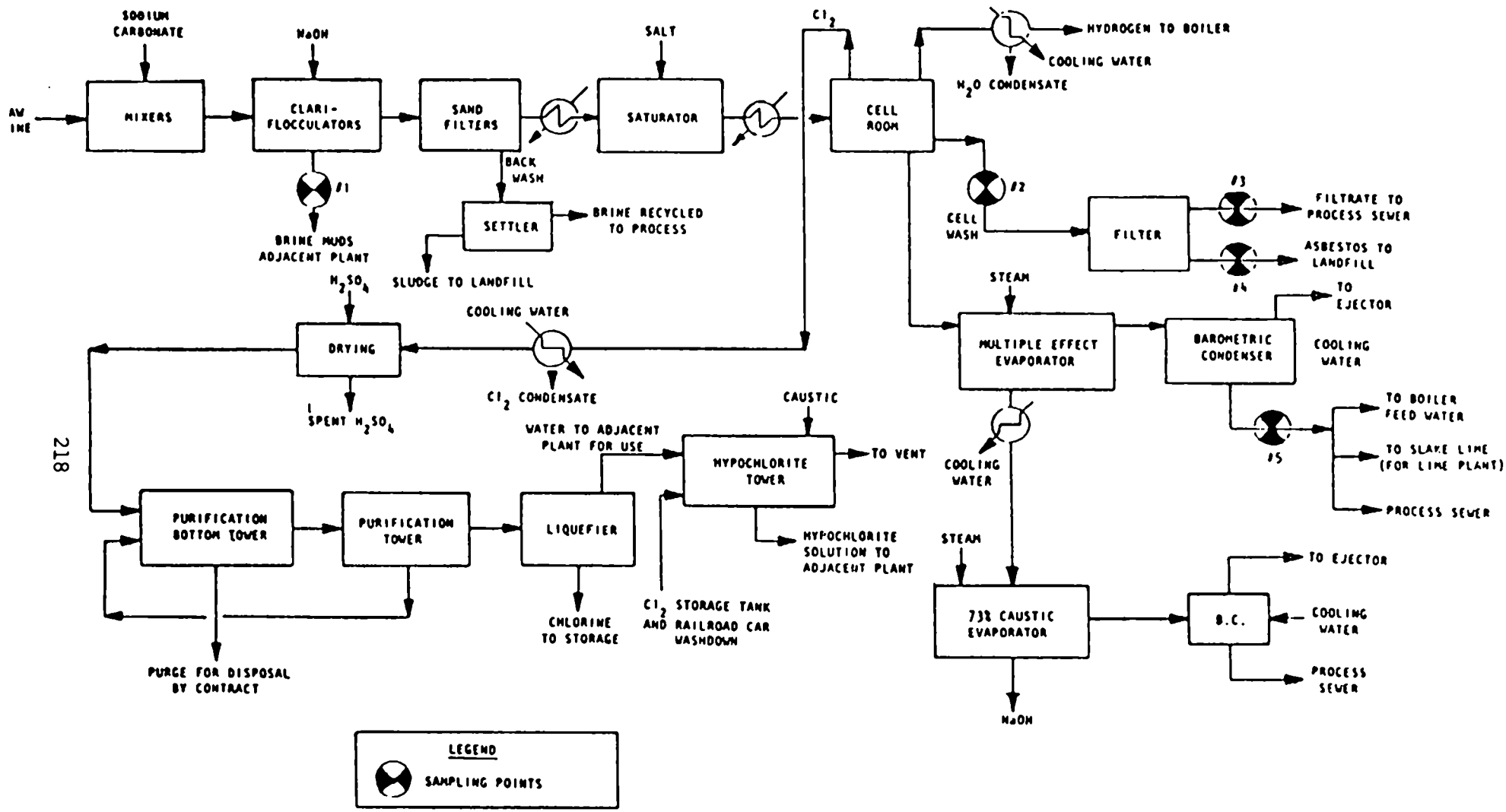

Figure 11-16. General process flow diagram at Plant #261 showing the sampling points. Chlorine/Caustic (Diaphragm Cell) manufacture

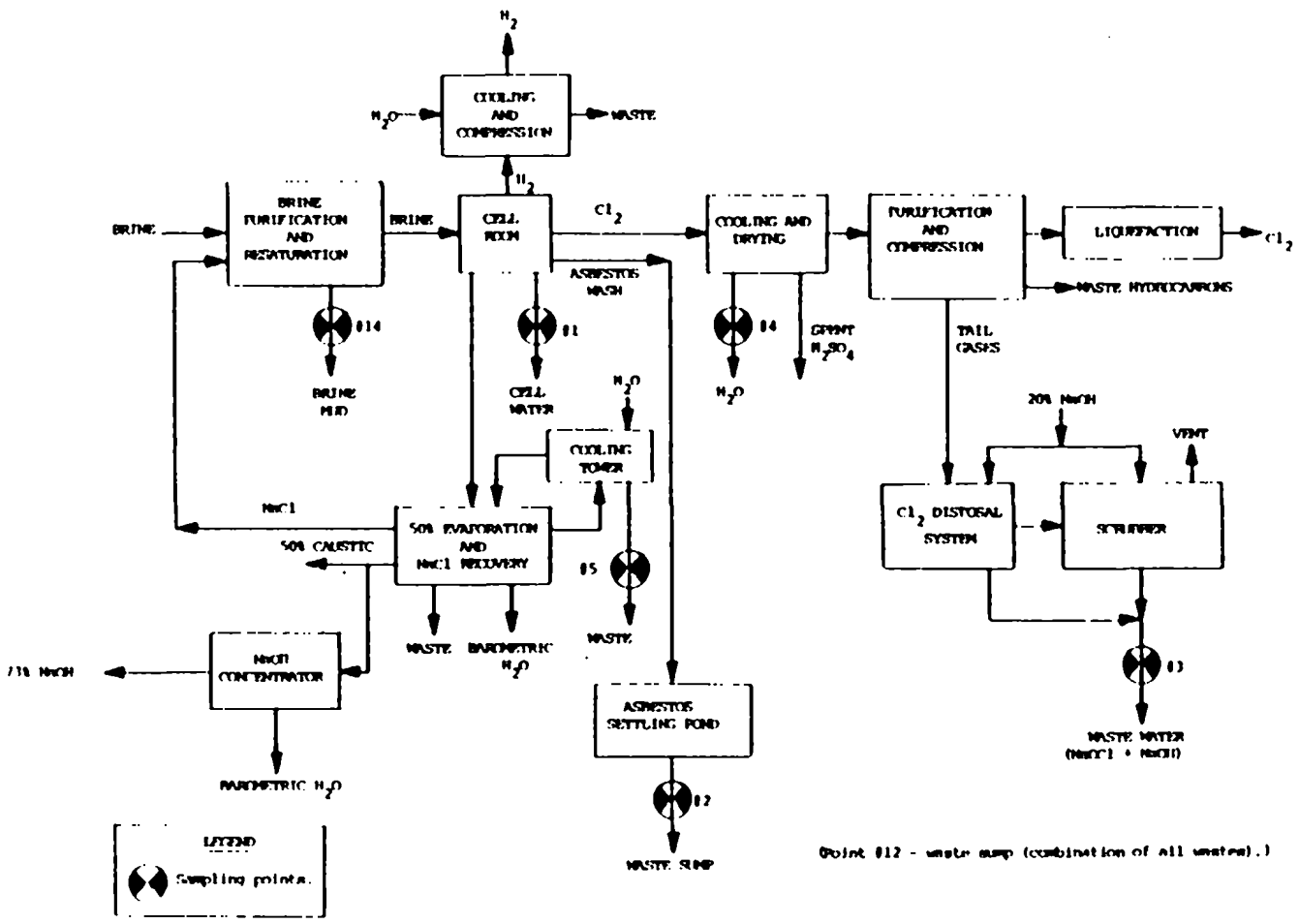

Figure 11-17. General process flowsheet at plant #738-A showing the sampling points. Chlorine/caustic (diaphragm cell) manufacture.

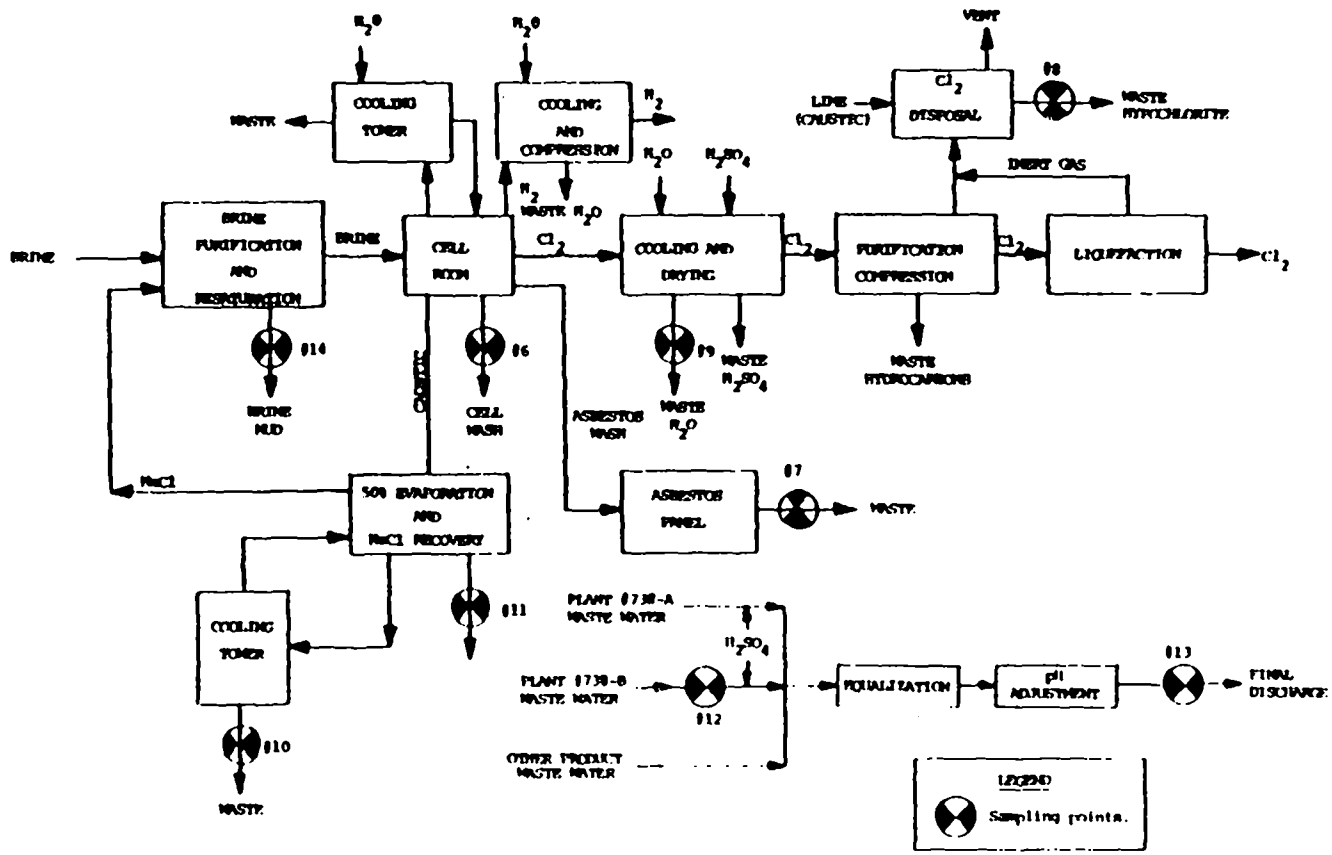

Figure 11-18. General process flow diagram at plant #738-B showing the sampling points. Chlorine/caustic (diaphragm cell) manufacture.

Plant #736 has installed demisters to control the vapors evolved from the last stage of the evaporator during the concentration of caustic soda. In this treatment, the steam evolved from the concentration of cell liquors passes through metal wool filters to reduce entrained solids. The cell room washings are sent to a settling chamber and the settled asbestos is sent to a landfill. The other waste waters, consisting of caustic evaporator washings and wastes from salt separation, brine purification operations, and caustic filtration backwash waters, are combined and sent to one of two settling ponds. Skimming devices on the settling ponds remove any oil that separates, while the settled solids in the ponds are dredged and disposed of in an abandoned brine well. Figure 11-19 shows the process flow diagram and sampling points.

Plant #967 uses graphite anodes in its diaphragm cells. The cell washings at this plant are sent to an asbestos pond that has a continuous cover of water. Periodically, the settled solids are removed, sealed in drums and disposed of in a landfill. The overflow from the pond is treated with soda ash to precipitate lead, and then filtered. Sulfuric acid is used to bring the pH down to the 6 to 9 range. Figure 11-20 is a general process flow diagram for Plant #967.

11.10.3 Descriptions of Plants Not Sampled

At Plant #999 brine mud and other streams with high suspended solids are collected and filtered with leaf filters. The cake is disposed of in a landfill and the filtrate returned to the brine system.

At Plant #326, waste water from the diaphragm cell process is combined with other process waste waters. The combined waste water is sent to two settling tanks in series. In one of the settling tanks, skimmers have been installed to remove oil and the overflow from the second is filtered before discharge.

At Plant #589, the brine mud from the clarifier underflow is sent to a brine mud settling pond. The overflow, which is mostly brine, is returned to the process. The cell room washings are sent to a settling pit and the settled asbestos fibers are removed by the use of a vacuum truck, and disposed of in a landfill. The chlorine from the cells is contact-cooled with the tail gas scrubber water. The resulting waste water is steam stripped for chlorine recovery before discharge.

At Plant #741, chlorine, caustic soda, and potassium hydroxide are produced using both mercury and diaphragm cells. Mercury-bearing effluent at this facility is treated by sulfide precipitation. Tail gas absorption wastes are treated by catalytic decomposition by a process which consists of scrubbing

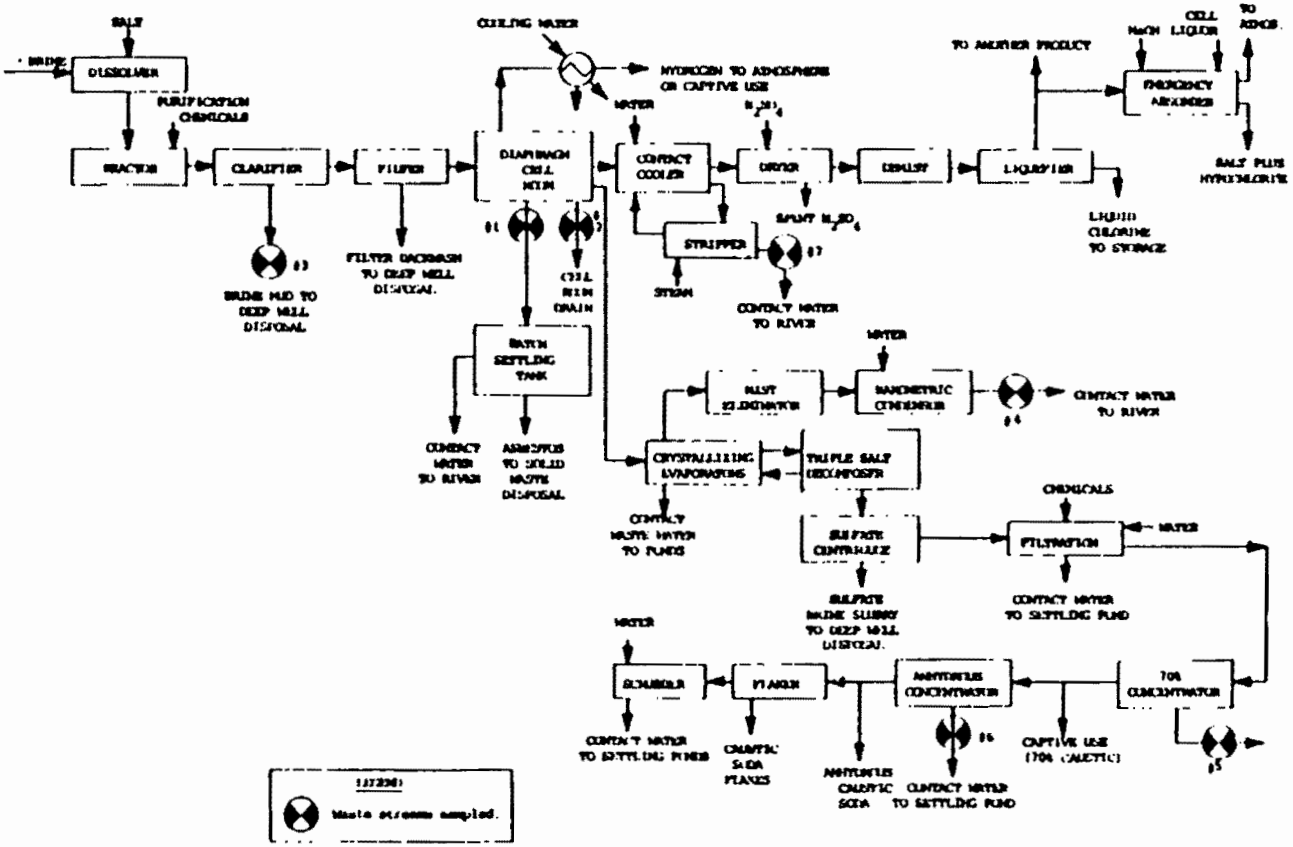

Figure 11-19. General process flow diagram at Plant #736 showing the sampling points. Chlorine/Caustic (Diaphragm Cell) manufacture

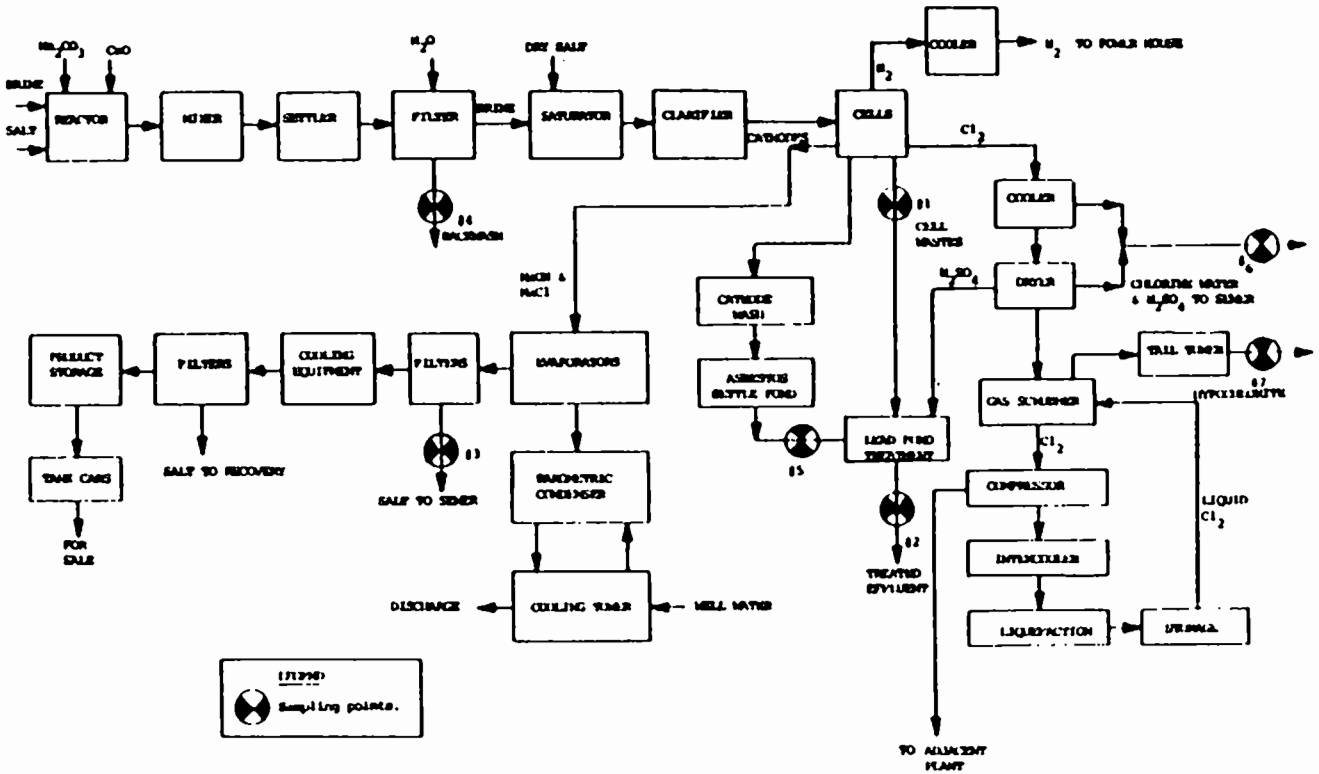

Figure 11-20. General process flow diagram at Plant #967 showing the sampling points. Chlorine/Caustic (Diaphragm Cell) manufacture

with caustic soda solution and treating the resulting hydrochlorite solution with nickel chloride and iron chloride. Consumption of iron and nickel chloride is approximately equal and consists of 0.01 kilogram per metric ton of chlorine produced. The catalytic decomposition proceeds relatively slowly, and wastes are retained in the treatment tanks for approximately three days, after which time no residual chlorine is reported to be present (3).

11.10.4 Toxic Pollutant Concentrations

Analytical Data Base

Section 5.1.2 of this report describes the methodology of the screening and verification sampling program. In the chlorine diaphragm cell industry, a total of 15 days of sampling were conducted at Plants #014, #261, #738, #967, and #736. Thirty-seven different sampling points were involved covering various raw waste streams and the treated effluents at these plants. The evaluation of the toxic metal content of these process related waste streams was based on 975 analytical data points. The sampling for toxic organic pollutants at Plants #014 and #967 generated 2300 analytical data points. Analysis of waste for asbestos generated an additional 13 data points.

Asbestos

Asbestos, used as a diaphragm separating the cell anode and cathode, is the major toxic pollutant consistently found in process waste water from diaphragm cell plants. It occurs primarily in wastes resulting from activities such as cell room washdown and cell repair and cleaning.

Table 11-22 presents the results of asbestos determinations of supply water and waste waters at three diaphragm cell plants. Results are expressed as total fibers per liter (in millions) as well as crisotile and amphibole fibers per liter.

There are no standardized analytical techniques and no definition of asbestos in water. Because of this, EPA is excluding limitations for asbestos from these proposed regulations and deferring regulation to a later date.

Toxic Metals

Table 11-23 presents maximum daily concentrations of toxic metals found in raw waste samples during the screening and verification of diaphragm cell chlorine plants. Maximum concentrations observed at one graphite anode plant are presented separately. It is clear that except for lead, toxic metals concentrations at the graphite anode plant are

TABLE 11-22. RESULTS OF ASBESTOS SAMPLING AT DIAPHRAGM CELL PLANTS

Plant	Stream	Total Asbestos Fibers (MFL)*	Chrisotile MFL	Amphibole MFL
# 261	Supply	8.0	7.5	0.4
	Cell Wash	2.1×10^8	2.1×10^8	0
	Filtered Discharge	1.6×10^3	1.6×10^3	0
	Barometric Condenser	0.4	0.4	0
# 736	Supply	0.7	0.7	0
	Cell Wash	2.0×10^7	2.0×10^7	0
	Cell Room Waste	2.9×10^2	2.8×10^2	8
	Barometric Condenser	1.8	0	1.8
	Barometric Condenser	5.3	5.3	0
	Barometric Condenser	1.4×10^2	1.4×10^2	0
# 967	Supply	9.7×10^2	9.7×10^2	0
	Cell Waste	2.4×10^4	2.4×10^4	8×10^2
	Pond Effluent	2.4×10^3	2.4×10^3	0
	Caustic Wash	7.8×10^3	7.8×10^3	0
	Brine Filter Backwash	8.0×10^2	6.2×10^2	1.8×10^2
	Cathode Wash Waste	3.2×10^5	3.2×10^5	0
	Condensate & Spent Acid	2.7×10^2	1.8×10^2	8.9×10
	Neutralizer Waste	2.1×10^3	2.1×10^3	0

*Million fibers per liter

TABLE 11-23. MAXIMUM RAW WASTE CONCENTRATIONS OF TOXIC METALS OBSERVED AT DIAPHRAGM CELL CHLORINE PLANTS (mg/l)

SUBCATEGORY	CHLORINE DIAPHRAGM CELL	
Toxic Metal	Plants with Metal Anodes	Plant with Graphite Anode
Antimony	<0.25	<0.065
Arsenic	0.17	0.59
Beryllium	<0.014	<0.001
Cadmium	0.037	0.017
Chromium	7.4	<0.048
Copper	17	0.27
Lead	2.0	44
Mercury	<0.003	0.004
Nickel	22	0.070
Selenium	<0.020	<0.030
Silver	0.018	<0.016
Thallium	<0.25	<0.050
Zinc	3.0	0.25

essentially no higher than at the metal anode plants. Because several waste streams usually contribute to the total raw waste at chlorine plants, a calculation was often necessary to determine the pollutant concentrations that would exist when the streams were mixed prior to treatment. An example of this calculation is the "mixing" of the following hypothetical streams:

Stream A: 100 gallons per minute, 15 mg/l of pollutant

Stream B: 10 gallons per minute, 60 mg/l of pollutant

The weighted average for the mixed streams is given by:

Concentration of mixed stream =

$$\frac{(\text{Flow A} \times \text{Concentration A}) + (\text{Flow B} \times \text{Concentration B})}{(\text{Flow A} + \text{Flow B})}$$

Substituting numerical values gives:

$$\frac{(100\ \text{gpm})\ (15\ \text{mg/l}) + (10\ \text{gpm})\ (60\ \text{mg/l})}{110\ \text{gpm}} = 19\ \text{mg/l}$$

This method was used to calculate raw waste concentrations of pollutants as presented in Table 11-23. Barometric condenser waste water when "once through" was not included because of the high dilution effect of these large flows. Brine mud flows were also not included.

The daily raw waste loads were calculated from the waste stream flow rates measured or estimated at the time of sampling and the measured pollutant concentration.

That is,

$$\text{Daily loading (as kg of pollutant per day)} = \frac{(C)\ (Q)}{1000}$$

Where:

C is the concentration of the pollutant expressed in unit of mg/l (Note: kg/m3 = 1000 mg/l) and

Q is the waste stream flow rate expressed in units of m3/day (m3, a cubic meter, is equal to 264.2 U.S. gallons).

Similarly, the unit loadings were calculated from the reported chlorine production rate, the waste stream flow rate, and the measured pollutant concentration.

Unit loading (as kg of pollutant per kkg of chlorine $= \frac{(C)\ (Q)}{1000\ P}$

Where C and Q are as described above, and P is the chlorine production rate expressed in units of kkg/day (kkg is 1000 kg, a metric ton, which is equal to 2205 lbs).

The minimum, average and maximum values were calculated based on data from those plants where the particular pollutant was found at a detectable concentration.

In Table 11-24, the toxic pollutant raw waste data are presented as the average daily concentrations (based on three 24-hour samples) and the unit loadings found at the individual plants. Beryllium, selenium, and thallium are not included in the table because average concentrations were below detectable limits.

In Table 11-25 plant average daily and unit loadings are presented as minimum, average, and maximum values based on data presented in Table 11-24 for metal anode plants only. (The graphite anode plant is considered separately due to its particular waste source characteristics.)

Based on the average waste loads generated per unit of product at metal anode plants and one graphite anode plant, and the estimated total subcategory production, the estimated total pollutant raw waste loads generated each year by this subcategory are as follows:

Raw Waste Load

Pollutant	kg/year
Antimony	483
Arsenic	6,300
Cadmium	41
Chromium	3,100
Copper	4,400
Lead	470,000
Mercury	48
Nickel	3,600
Silver	5
Zinc	5,100

Because cell room wastes including cell or cathode wash wastes, leaks, spills and washdown are usually treated separately at diaphragm cell plants and because other process wastes such as filter backwashes, condensates and caustic evaporation wastes are usually discharged after the settling,

TABLE 11-24. TOXIC METAL CONCENTRATIONS AND LOADS AT SCREENING AND VERIFICATION PLANTS

(mg/l)
(kg/kkg)

SUBCATEGORY	CHLORINE DIAPHRAGM CELL					
	Plant#					
Pollutant	014	261	738A	738B	736	967**
Antimony	*	*	*	*	0.010 0.0000033	0.011 0.00015
Arsenic	*	0.17 0.0000064	* *	0.011 0.000021	0.057 0.000014	0.30 0.0021
Cadmium	0.002 0.0000018	0.037 0.0000014	*	*	0.025 0.0000061	*
Chromium	0.019 0.000017	1.9 0.000071	0.52 0.0046	0.066 0.0012	0.18 0.000044	0.004 0.000032
Copper	0.015 0.000014	17 0.00064	0.045 0.00039	0.12 0.00023	0.43 0.00011	0.16 0.0011
Lead	0.006 0.0000045	2.0 0.000075	0.082 0.00060	0.11 0.000021	0.016 0.0000039	21 0.015
Mercury	0.002 0.0000018	*	*	*	0.003 0.0000007	0.002 0.000014
Nickel	0.90 0.00081	22 0.00081	0.21 0.0018	0.067 0.00013	0.22 0.000054	0.068 0.00049
Silver	*	0.018 0.0000007	*	*	*	*
Zinc	*	1.5 0.000054	0.29 0.0021	0.093 0.00018	3.0 0.00074	0.19 0.0014

* Below measurable concentrations

** Graphite Anode plant

TABLE 11-25. SUMMARY OF RAW WASTE LOADINGS AT SCREENING AND VERIFICATION METAL ANODE PLANTS

SUBCATEGORY	CHLORINE DIAPHRAGM CELL						
	Loading (kg/kkg)			Unit Loading (kg/kkg)			*Number of Plants Averaged (out of 5)
Pollutant	min.	avg.	max.	min.	avg.	max.	
Antimony	0.00077	0.00077	0.00077	0.0000033	0.0000033	0.0000033	1
Arsenic	0.0019	0.0084	0.020	0.0000064	0.000017	0.000030	3
Cadmium	0.00041	0.00076	0.0014	0.0000014	0.0000032	0.0000061	3
Chromium	0.0042	0.59	2.8	0.000017	0.00096	0.0046	5
Copper	0.0035	0.12	0.19	0.000014	0.00020	0.00064	5
Lead	0.00090	0.094	0.37	0.0000039	0.00016	0.00060	5
Mercury	0.00016	0.00030	0.00044	0.0000007	0.0000012	0.0000018	2
Nickel	0.0066	0.31	1.1	0.000010	0.00057	0.0018	5
Silver	0.00021	0.00021	0.00021	0.0000017	0.0000007	0.0000007	1
Zinc	0.016	2.1	8.0	0.000054	0.00078	0.0021	4

* Only those plants where the pollutant was observed at measurable concentrations.

these two waste mixes were evaluated separately. Table 11-26 presents average raw waste concentrations and loads of toxic metals found in cell room wastes at the six diaphragm cell plants sampled. Table 11-27 presents the similar data from the sampling of other process wastes at these plants.

Toxic Organic Pollutants

The use of graphite anodes at chlorine plants results in the generation of a variety of simple chlorinated hydrocarbon compounds as a result of the attack of chlorine on the anodes. These compounds are carried out of the cell with the chlorine and find their way into the various waste streams which originate from the chlorine cooling, drying, compression, and liquefaction steps.

Table 11-28 presents the toxic organics that were observed in measurable concentrations in the raw wastes at Plant #967. The concentrations presented in the table were calculated as a mixture of all raw waste streams weighted on a flow basis as previously described.

Table 11-29 presents the concentrations of toxic organics by individual raw waste stream at Plant #967. It is clear from the table that the highest concentrations of organics occur in wastes from chlorine treatment (condensate, drying acid and tail gas scrubber water) and they account for 83 percent of the total organic waste load.

11.11 POLLUTION ABATEMENT OPTIONS

11.11.1 Toxic Pollutants of Concern

Lead occurs in high concentrations in the cell room waste waters of chlorine plants using graphite anodes. Other toxic metals often found in significant concentration at diaphragm cell plants include arsenic, cadmium, chromium, copper, nickel, and zinc. Antimony, mercury, and silver were also detected but at concentrations that are not treatable. These metals are not considered further. The sources of these metals may be raw material impurities or corrosion products from the reaction between chlorine or acid and the process equipment materials of construction.

Toxic organic compounds also occur in waste waters from graphite anode plants because of the attack of chlorine on the anode material. They appear primarily in waste streams associated with the purification of chlorine.

TABLE 11-26. TOXIC METAL CONCENTRATIONS AND LOADS IN CELL ROOM WASTE WATERS AT SCREENING AND VERIFICATION PLANTS $\left(\frac{mg/l}{kg/kkg}\right)$

Pollutant	Plant # 014	261	738A	738B	736	967**
Antimony	*	*	0.050 0.0000081	*	0.038 0.0000031	0.41 0.00015
Arsenic	0.010 0.0000001	0.17 0.0000064	*	*	0.17 0.000014	0.45 0.00017
Cadmium	*	0.037 0.0000014	*	*	*	0.016 0.0000059
Chromium	0.94 0.000014	1.9 0.000071	*	0.075 0.000012	0.54 0.000044	0.086 0.000032
Copper	0.53 0.0000075	17 0.00064	0.24 0.000042	0.38 0.000061	1.1 0.000090	2.4 0.00089
Lead	0.26 0.0000039	2.0 0.000075	0.044 0.0000077	0.11 0.000018	0.047 0.0000038	370 0.14
Mercury	*	*	0.003 0.0000005	*	0.002 0.0000002	0.001 0.0000004
Nickel	54 0.00081	22 0.00081	*	0.061 0.0000098	0.67 0.000055	0.36 0.00013
Silver	*	0.018 0.0000007	*	*	*	*
Zinc	*	1.5 0.000054	0.046 0.0000080	0.46 0.000074	0.58 0.000048	0.92 0.00034

*Below detection limits

** Graphite anode plant

TABLE 11-27. RAW WASTE TOXIC METALS CONCENTRATION AND LOADS IN PROCESS STREAMS OTHER THAN CELL ROOM WASTES FROM SCREENING AND VERIFICATION PLANTS

Pollutant	Plant #014	#738A	#738B	#736	#967	Avg
			(mg/l) / (kg/kkg)			
Antimony	*	*	*	*	*	*
Arsenic	*	*	0.011 0.000019	*	0.29 0.0020	0.15 0.0010
Cadmium	0.002 0.0000018	*	*	0.038 0.0000062	*	0.020 0.0000040
Chromium	*	0.53 0.0046	0.065 0.00011	*	*	0.29 0.00014
Copper	0.004 0.0000036	0.041 0.00035	0.094 0.00016	0.090 0.000015	0.030 0.00020	0.043 0.00014
Lead	*	0.083 0.00060	0.11 0.00019	*	0.40 0.0027	
Mercury	0.002 0.0000018	*	*	0.003 0.0000005	0.002 0.000014	0.002 0.0000054
Nickel	0.003 0.0000027	0.21 0.0018	0.067 0.00012		0.052 0.00035	0.088 0.00072
Silver	*	*	*	*	*	*
Zinc	*	0.29 0.0021	0.058 0.00010	4.3 0.00070	0.15 0.0010	1.5 0.0037

* Below detection limits

TABLE 11-28. RAW WASTE TOXIC ORGANICS AT A GRAPHITE ANODE PLANT

SUBCATEGORY	CHLORINE DIAPHRAGM CELL	
Pollutant	Concentration* (mg/l)	Load (kg/day)
benzene	0.00040	0.0011
carbon tetrachloride	0.023	0.066
1,2-dichloroethane	0.079	0.23
1,1,1-trichloroethane	0.00014	0.00040
hexachloroethane	0.010	0.029
1,1,2-trichloroethane	0.00040	0.0011
1,1,2,2-tetrachloroethane	0.000044	0.00013
chloroform	0.085	0.24
1,1-dichloroethylene	0.000026	0.000074
2,6-dinitrotoluene	0.000026	0.000074
methylene chloride	0.00056	0.0016
bromoform	0.000063	0.00018
dichlorobromomethane	0.035	0.10
chlorodibromomethane	0.002	0.0057
hexachlorobutadiene	0.004	0.011
bis(2-ethylhexyl)phthalate	0.00075	0.0022
di-n-butyl phthalate	0.00078	0.0022
tetrachloroethlene	0.036	0.10
toluene	0.0030	0.0086
trichloroethylene	0.020	0.0057

*Flow-proportioned concentration

TABLE 11-29. RAW WASTE TOXIC ORGANICS BY WASTE WATER SOURCE AT A GRAPHITE ANODE PLANT

SUBCATEGORY CHLORINE DIAPHRAGM CELL

Stream	Total Toxic Organics (mg/l)	Total Toxic Organics (kg/day)	Percent of Total Toxic Organics
Cell building wastes	0.126	0.0093	1.1
Caustic filter backwash	0.057	0.12	14
Brine filter backwash	0.003	0.00050	0.06
Cell wash	0.20	0.014	1.6
Chlorine condensate and Spent H_2SO_4	2.2	0.70	81.5
Scrubber waste	0.81	0.015	1.7
Totals	0.30 *	0.86	100

* Flow-proportioned concentration

Asbestos occurs in all waste waters from diaphragm cell plants, and in large quantities in cell room waste waters when cells are cleaned and repaired.

11.11.2 Prevailing Control and Treatment Practices

Section 11.10 described specific control and treatment practices at eleven plants. The prevailing practices at diaphragm cell plants are to control asbestos wastes by settling or filtering cell wash waste waters and to neutralize and settle all waste waters before discharge. The recycle or reuse of waste streams is practiced to varying degrees in the industry depending on plant-specific factors such as raw material quality and type of anodes used.

Plants using graphite anodes are treating lead-bearing wastes by chemical precipitation and settling and/or filtration before discharge.

The control of toxic organic compounds in the waste streams at graphite anode plants also varies in the industry. At Plant #967 where the end use of the chlorine is captive, involving its direct application to the manufacture of a chlorinated organic product, the bulk of chlorinated organic impurities are not removed.

At Plant #195, where a more purified product is required, the organics are accumulated in the reboiler of the chlorine scrubber. The residues are treated batchwise for separation and recovery of the organic phase materials which are then sold as feedstock for the manufacture of related products. Prior to discharge the aqueous phase is vacuum stripped to remove additional organics and chlorine for recycle. Normally, one batch of organics is treated per week. After separating each batch of organics and stripping the residual aqueous phase, the quantity of waste water discharged is approximately 5.7 m3/week or 0.8 m3/day. The organic loading in this waste is not known, however, if the assumption is made that the discharge is saturated with carbon tetrachloride (CCl_4) (800 mg/l @ 20 degrees C), the waste load would be 0.5 kg/day.

Although the daily mass emissions from the two plants are likely to be similar and both would require additional treatment to achieve acceptable discharge levels, the wide difference in concentrations of the chlorinated organics as well as the manner in which they are handled would necessitate the application of an advanced treatment technology specifically suited to each case.

Where the flow is large and the concentrations are low, the application of activated carbon adsorption to the collected

organic-bearing waste stream at Plant #967 would be capable of reducing a CCl_4 mass emission from 0.066 kg/day to approximately 0.03 kg/day, assuming an achievable treatability level of 0.10 mg/l.

In the case of Plant #195, where the volume of waste water is small but the concentrations of residual chlorinated organics can be on the order of several hundred parts per million, a more appropriate removal technology would be steam stripping with an overhead return to the process. Assuming a treatability level of 10 mg/l for CCl_4 using this technology, its mass emission could be reduced to approximately 0.001 kg/day.

11.11.3 Process Modifications and Technology Transfer Options

Anode Material

The use of metal anodes rather than graphite anodes increases cell power efficiency and greatly reduces the pollutant loads of lead and toxic organics in plant waste waters. Approximately half of the diaphragm cell production of chlorine is now by metal anodes.

Caustic Evaporation Water

The vapors from the evaporative concentration of caustic soda are either contact-cooled or cooled in surface condensers. Plants practicing contact cooling through barometric condensers generate large amounts of waste water contaminated with caustic soda and salt. By changing from contact cooling of the vapors to noncontact cooling, or by recirculating barometric condenser water, the amount of waste water generated can be reduced considerably. If the change is considered too expensive or is not feasible, demisters or similar control devices can be installed to reduce the salt and caustic carryover in the vapors.

Diaphragm Material

Although not in full scale use at any U.S. chlorine plants, modified diaphragms have been developed which can reduce power consumption and minimize or eliminate asbestos discharges. The modified diaphragms include polymer membrane and ion exchange membrane diaphragms.

Polymer Modified Asbestos Membranes - These consist of a polymer treated asbestos diaphragm baked into place on the cathode. Its usage results in power savings and has an environmental benefit, since, at the time of rebuilding the

cathodes, the discarded material is produced in stablized pieces instead of loose asbestos fibers. Final disposal is thus safer and easier.

Polymer Membranes - These consist of a microporous Teflon® type polymer, and their operation has been demonstrated successfully in laboratory and pilot plant scale cells. In addition to the benefits of cost savings through energy use reduction and longer life, their use eliminates the handling and disposal problems associated with asbestos.

Ion Exchange Membranes - These membranes allow the production of a concentrated caustic similar to that produced by mercury cells. The production of salt-free concentrated caustic will reduce the waste water associated with the caustic evaporation process. Like the polymer membranes, the problems associated with the handling and disposal of asbestos are eliminated.

Liquefaction of Chlorine

Utilization of high pressure and refrigeration for chlorine recovery will reduce the chlorine content in tail gases.

Tail Gas Emission Control

As with mercury cell plants, chlorine in tail gases has to be removed and treated or recovered before venting to the atmosphere. The common practice is to scrub the gas with caustic soda producing a hypochlorite solution. This hypochlorite can then be sold, used on-site or discharged. Decomposition is a common method of removing the chlorine in this stream prior to discharge. Catalytic, thermal and chemical methods of decomposition, described in Section 11.4.3, are effective.

11.11.4 Best Management Practices

The following Best Management Practices are common industry practices and are provided for guidance purposes although they may not meet the requirements of the Resource Conservation and Recovery Act (as amended, 42 USC 6901 et. seq.).

Area Runoff

Provisions can be made to divert and contain storm runoff from areas where lead or asbestos contamination could occur. Collected runoff can then be treated with other wastes.

Leaks and Spills

Provisions can be made in cell room areas to control and collect the leaks or spills contaminated with lead or asbestos.

Contaminated Solids

Asbestos waste and precipitated metals wastes should be stored in a lined pond or disposed of in a secure landfill.

11.11.5 Advanced Treatment Technologies

The methods available and currently used in the industry for the removal of lead and other toxic metals from plant waste waters include hydroxide or carbonate precipitation followed by settling or filtration. Further removal of metals can be effected using sulfide precipitation, adsorption and ion exchange.

Removal of asbestos from cell wastes is improved with the addition of coagulating agents prior to filtration of these wastes.

11.12 SELECTION OF APPROPRIATE TECHNOLOGY AND EQUIPMENT

11.12.1 Technologies for Different Treatment Levels

Level 1 (BPT)

Level 1 treatment addresses the waste characteristics associated with diaphragm cell plants using graphite anodes. The data from graphite anode plants were used because the pollutant load is greater than for metal anode plants. Existing plants that have changed from graphite anode to metal anode will have residual effects that increase their loads for an extended time after the change - possibly as long as two years. Waste streams from the cell rooms and the cathode wash station (asbestos pond overflow) are collected in a holding tank where they are combined with any other process waste sources containing treatable levels of lead and other toxic metals. Alkaline precipitation of the toxic metals is accomplished by the addition of soda ash. The solids are removed by filtration and the filtrate may be combined with other process waste streams such as chlorine condensate, tail gas scrubber water, caustic filter backwash and barometric condenser waters found to be contaminated with toxic metals at levels usually below the limits of treatability by alkaline precipitation. Because the other process water sources are normally alkaline the pH is relatively unchanged and clarification for suspended solids

removal also achieves some additional removal of traces of toxic metal hydroxides. Thus, the combined flow is clarified and discharged directly or, in some cases, it may be combined with noncontact waste waters and passed through a polishing pond system prior to final discharge. At all levels of treatment, the brine mud is collected in lagoons and the effluent recycled to process. The flow diagram for Level 1 treatment is shown in Figure 11-21.

Level 1 treatment was ultimately selected as the basis for BPT because it represents a typical and viable industry practice for the control of asbestos fiber, lead, and other toxic metals in waste waters associated with diaphragm cell plants using graphite anodes. Plants utilizing metal anodes are expected to have lower levels of toxic metal emissions and may not require alkaline precipitation to meet the proposed BPT limitations. All 39 plants in the industry presently have BPT or equivalent treatment technology installed.

Level 2 (BAT)

The objective of Level 2 treatment technology is to achieve, at a reasonable cost, a greater degree of asbestos fiber and toxic metals removal than provided by Level 1. Thus, Level 2 adds dual-media filtration to the combined effluent from Level 1 treatment excluding noncontact waste streams. Dechlorination of the final plant effluent is also included in Level 2 (BAT) treatment. This assumes treatment by sulfur dioxide or bisulfite to remove total residual chlorine to the detection limit of approximately 0.2 mg/l. This is a reasonable value for a waste water sample, since the Iodine Method for determining total residual chlorine is affected by the color of the sample.

Level 2 was finally selected as the basis for BAT regulations on the strength of technology transfer options within the inorganic chemicals industry and because four out of five plants sampled were meeting limits derived from published treatability data. In addition, two plants are known to practice dechlorination of the final effluent. The flow diagram for Level 2 is shown in Figure 11-22.

Level 3

The practice of sulfide precipitation of mercury in the mercury cell segment of the chlor-alkali industry suggested the application of this technology for achieving greater removal of toxic metals in diaphragm cell plants. Level 3 adds sulfide precipitation to Level 2 as shown in Figure 11-23. This option was not selected due to its relatively high cost per pound of additional metal removal obtained.

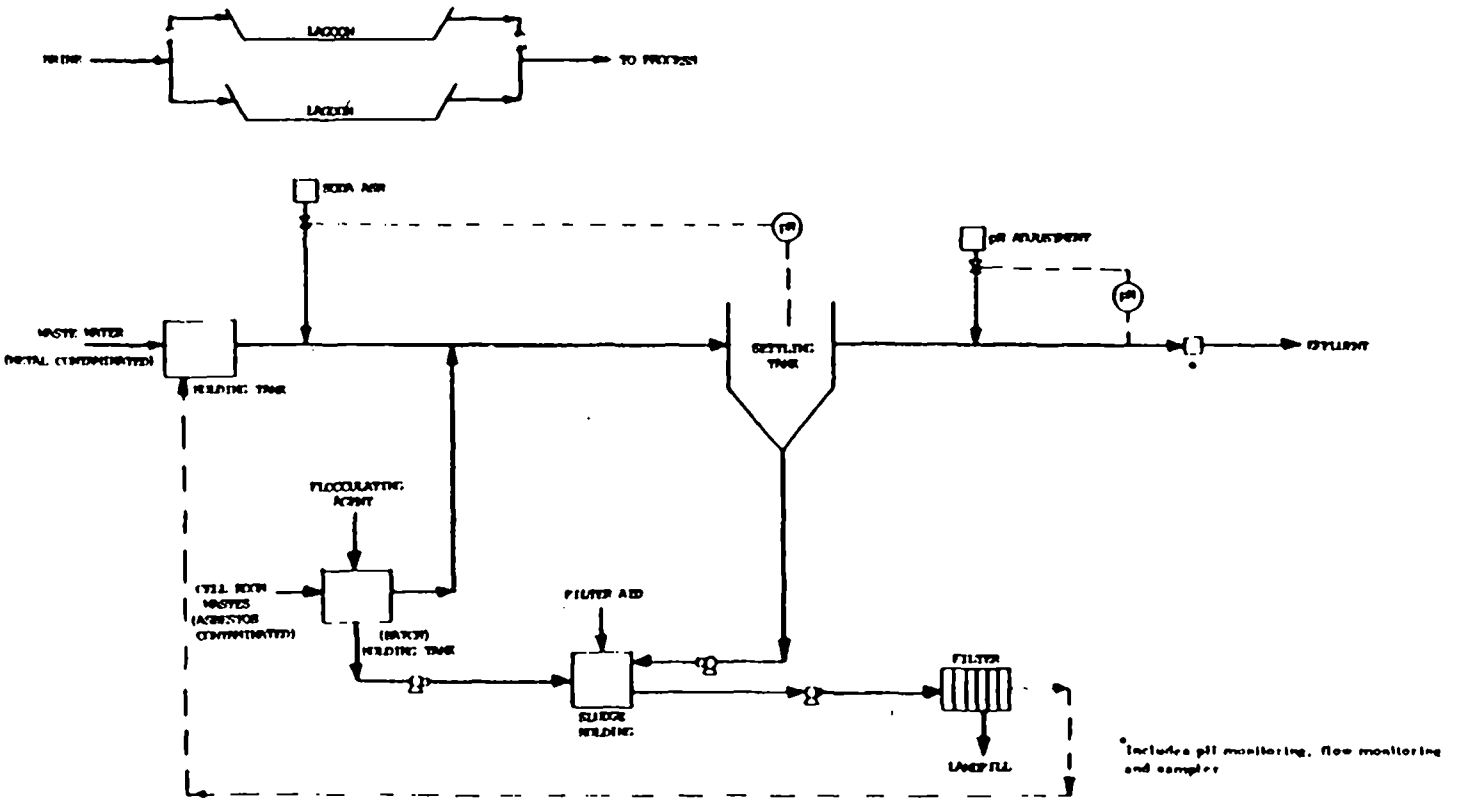

Figure 11-21. Level 1 waste water treatment for chlorine - diaphragm cell subcategory.

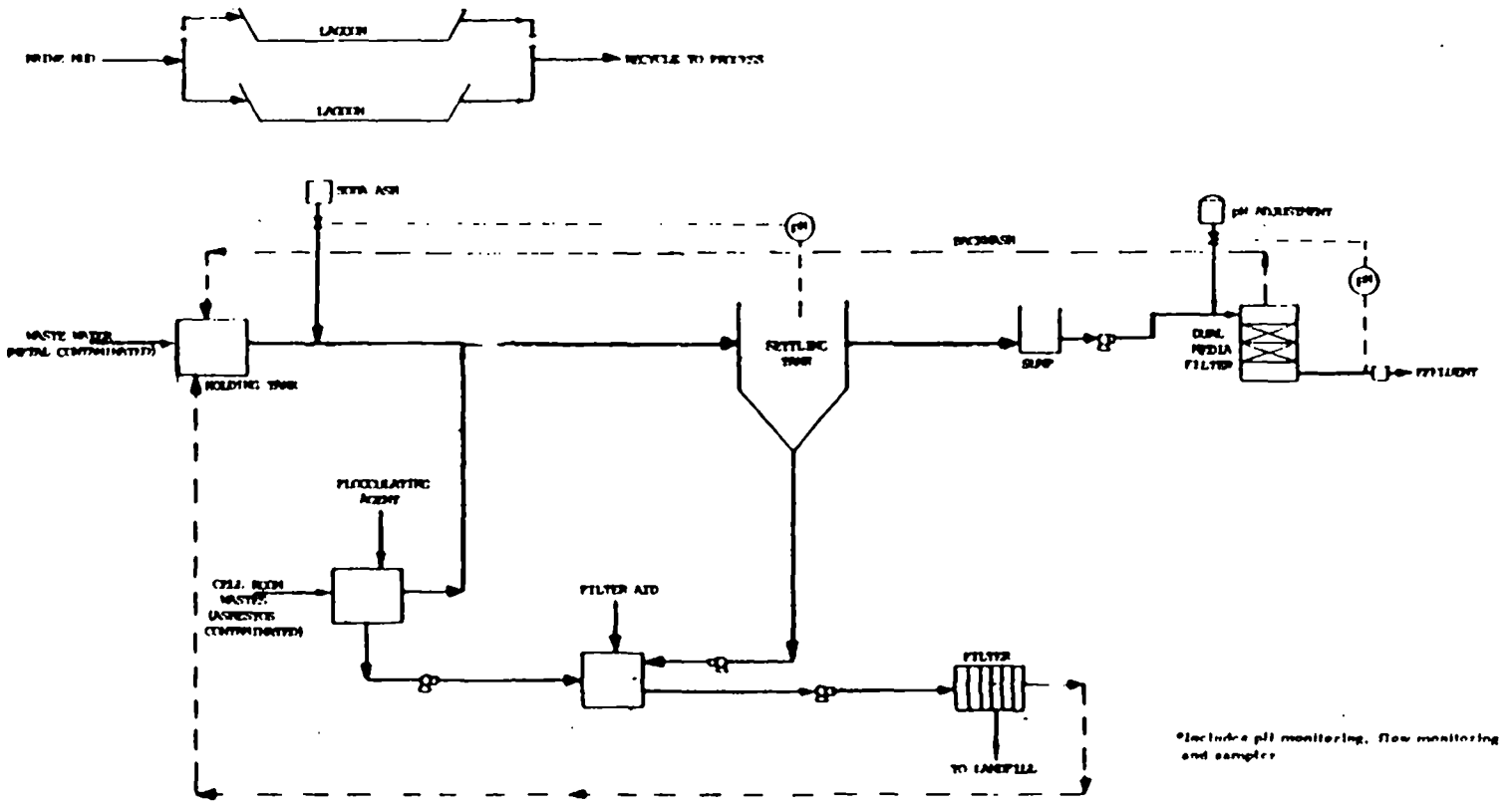

Figure 11-22. Level 2 waste water treatment for chlorine - diaphragm cell subcategory.

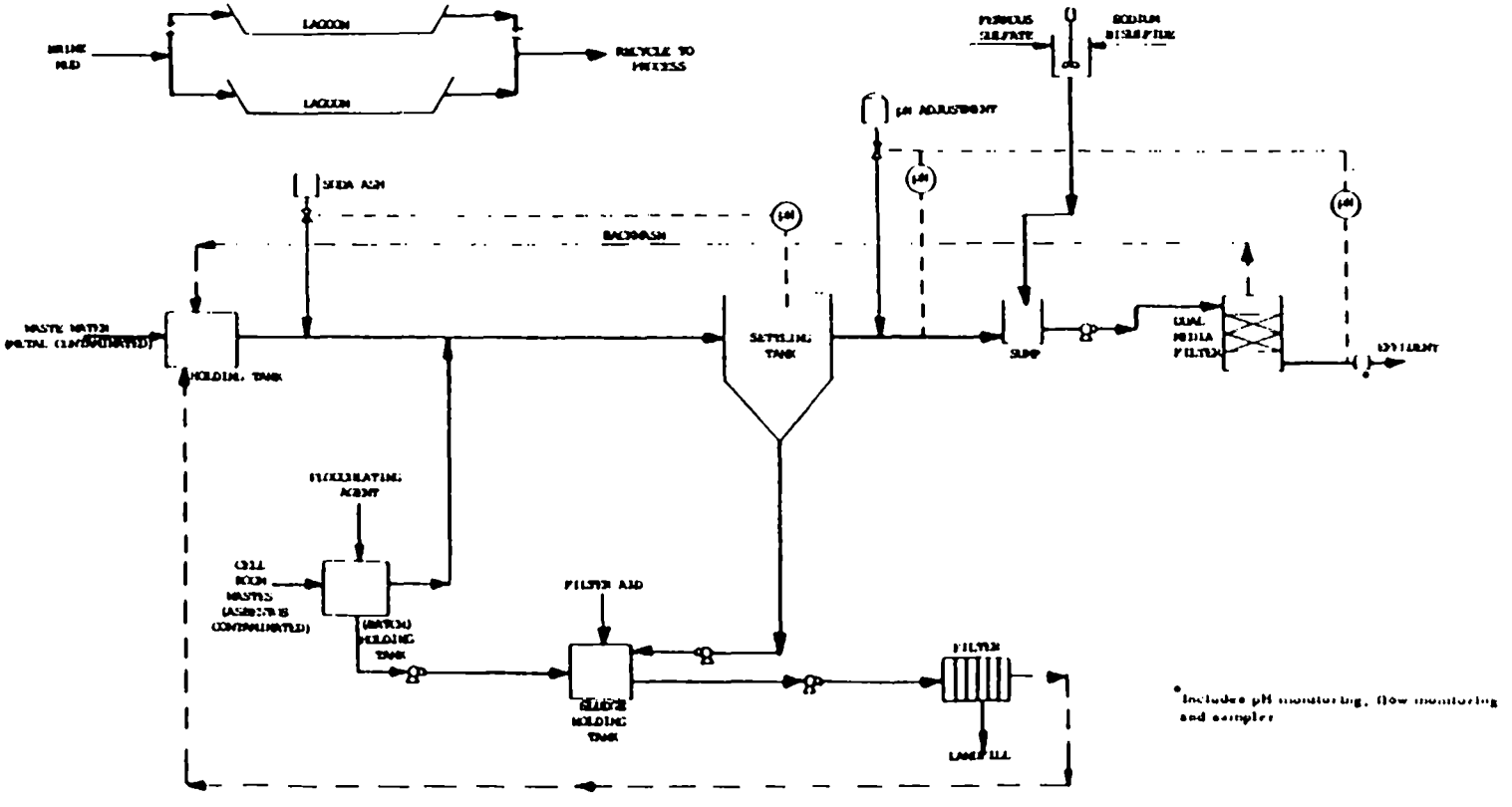

Figure 11-23. Level 3 waste water treatment for chlorine - diaphragm cell subcategory.

11.12.2 Equipment for Different Treatment Levels

Equipment Functions

Conventional sludge dewatering by filter press is used for asbestos sludge before disposal and dual-media filter backwash is returned to the influent surge tank. Level three requires the addition of a reagent mixing tank and chemical solution feeder. Level 3 treatment requires the addition of a reagent mixing tank and chemical solution feeder to introduce ferrous sulfide ahead of the Level 2 dual-media filter. All equipment is conventional and readily available.

Chemical Handling

Nonhazardous solutions of aluminum sulfate and sodium carbonate are the only solutions used at Levels 1 and 2. Inert filter aid used in the alum sludge filter process presents no unusual hazard. At Level 3 the potential hazard of handling sodium sulfide is nullified by reacting it with ferrous sulfate to form ferrous sulfide. Any excess ferrous sulfide will oxidize to a ferric sulfide precipitate. At the point where sodium sulfide is reacted with ferrous sulfate, good ventilation is essential to avoid the hazards associated with hydrogen sulfide gas.

Solids Handling

For all three levels of treatment, brine mud solids are accumulated in lined lagoons on-site. Asbestos solids and precipitated metals wastes are to be sent to suitable chemical landfills.

11.13 TREATMENT COST ESTIMATES

11.13.1 General Discussion

To prepare treatment cost estimates, a model plant concept was developed. Because higher pollutant loads and larger unit flows exist at graphite anode plants as opposed to metal anode plants the characteristics associated with these plants were used when possible for the model plant characteristics as discussed below.

The preliminary cost estimates presented in this report were based on incomplete industry data on waste source characteristics and flow rates. The cost estimates assumed a flow rate of approximately 1.2 m3/kkg for the waste stream from the cell room, asbestos pond, and other sources (Table 11-20).

Later revisions of the flow rates and the inclusion of other waste sources in the total volume of process related waste streams to be handled brought the total model plant flow rate up to the currently estimated 8.8 m3/kkg (Table 11-34). This is the flow used for the development of proposed regulations for the diaphragm cell segment of the industry. Since cost estimates were based on the preliminary flow estimate of 1.2 m3/kkg, the Agency is assessing the need for making appropriate adjustments in the cost estimates. Such adjustments will be made prior to final promulgation of the regulations. The model plant specifications given below are those used for regulation development purposes.

Chlorine Production

Approximately 60 percent of the production data for all chlorine plants using diaphragm cells is available on file. Production ranges from 15,000 to 1,500,000 kkg of chlorine per year. Three model plants with production rates of 19,100, 95,500, and 191,000 kkg per year were selected to represent the subcategory production range.

Waste Water Flow

Based on industry flow data (Table 11-20), waste streams in the model plants are segregated into brine mud, cell wash and cell room wastes, and other process wastes such as filter backwashes, condensates and tail gas scrubber wastes. For treatment cost estimates at all levels of treatment the following flow basis was used.

A. A brine mud flow of 0.42 m3/kkg is sent to lagoons for solids removal. Solids are disposed of on-site and other overflow is recirculated to process.

B. Cathode or cell wash waters, heavily laden with asbestos are sent to asbestos removal at a flow rate of 0.07 m3/kkg.

C. Cell room wastes consisting of leaks, spills, and area washdown contaminated with lead and other metals are combined with treated cell wash waters for a total flow of 1.2 m3/kkg to be treated for metals removal.

D. Other process waste water sources account for an additional 7.6 m3/kkg which is combined with effluent from the treatment of wastes from the cell room and cathode wash areas. This brings the model plant total flow rate to an estimated 8.8 m3/kkg. The final, combined process waste flow is either clarified and discharged as in Level 1 treatment or clarified,

passed through dual-media filtration, and dechlorinated prior to discharge as in Level 2 treatment.

Solid Waste Produced

Brine mud constitutes the major source of solid waste generated at chlorine plants. Although solids content varies from plant to plant, an average of ten percent solids was used for the model resulting in a solids load of 42 kg/kkg. Asbestos from cell wash operations and precipitated solids from metal treatment generate a solid waste of 0.83 kg/kkg.

Chlorine Bearing Wastes

In the selection of model plants, the following assumptions have been made for the chlorine contaminated waste streams.

The chlorine condensate waste stream has not been included in the waste streams going to the treatment facility. In the majority of the chlorine/caustic plants, this stream is stripped of chlorine by steam or vacuum and the chlorine is recycled to the purification operation. The waste water is then returned to the process and introduced to the brine purification unit or sent to the treatment unit. The quantity of waste water generated by this operation is small. In some cases the chlorine gas from the cells is contact-cooled with water and the scrubbed liquid, after steam stripping, is reused. The stripping operation in the recovery of chlorine is part of the process and, therefore, its cost is not included in the treatment cost.

The spent tail gas scrubber solution, which is mainly calcium/sodium hypochlorite, is assumed to be used or decomposed before it is discharged. Thermal decomposition can be practiced at no additional cost at some facilities, while another efficient method is catalytic decomposition. The cost estimates for decomposition are not included here because at many plants the hypochlorite stream is sold, used on-site or only infrequently discharged, depending on market demand.

However, because of the environmental effects of high levels of chlorine in waste water discharges, a separate set of cost estimates have been prepared for the dechlorination of total plant discharges using sulfur dioxide.

<u>Chlorinated organic wastes</u> - The chlorine-bearing waste streams at graphite anode plants are also those streams carrying the highest concentrations of toxic organics as indicated in Table 11-29. Section 11.11.2 discussed the techniques used to recover and remove organics from waste streams at Plant #195 and the fact that organic contaminated streams can exist as either

high volume-low concentration or low volume-high concentration depending on plant specific factors. Costs for removing organics are not included in the model plant cost estimates because organics are not limited in the regulation. Organics occur at low levels at most of the plants and when they are present the appropriate treatment method is site specific. Although the costs are not included the following information is provided as guidance. The additional costs for steam stripping in a plant (such as Plant #195) which already has a vacuum vaporizer, would be under $10,000 for modification of the existing equipment. Steam costs could vary from $1,000 to $5,000 per year. If a vaporizer is not in place, a steam stripper to process 5 to 30 m3/week would cost roughly $50,000 to $100,000, depending on the input concentrations to be handled. The corresponding steam costs would range from $2,000 to $10,000 per year.

The capital costs of an activated carbon adsorption unit for handling the relatively high volume wastes with a low influent organic loading (as found at Plant #967) cannot be reliably estimated in the absence of specific treatability data on the waste streams in question.

Alternatively, incineration of the chlorinated organic residuals is an effective means of destroying and disposing of this material provided that adequate measures are taken to control the release of HCl to the atmosphere.

A process evaluation should be made to determine the most efficient means for isolating and collecting the organic bearing waste streams prior to treatment.

Incidental removal of chlorinated organics will occur with the application of model plant treatment levels previously presented. Such removal, however, is expected to be erratic and therefore cannot be predicted. Because raw waste concentrations of these organics vary considerably depending on plant practices and are marginally treatable at times, applicable control and treatment technologies will need to be assessed on a case-by-case basis.

For these reasons, the Agency is not providing specific numerical discharge limitations for organic pollutants, but is providing guidance for evaluating control options that could be applied in the industry.

11.13.2 Model Plant Treatment Costs

On the basis of the model plant specifications and design concepts presented earlier, the estimated costs of treatment for three models having different production levels are shown in

Tables 11-30, 11-31, and 11-32. The cost of Levels 2 and 3 are incremental over Level 1 costs and provide for higher effluent quality with respect to toxic pollutants.

Table 11-33 presents a summary of the unit cost distribution between amortization and operation and maintenance components. Annual treatment costs as a function of production rate is shown graphically in Figure 11-24. Similarly presented in Figure 11-25 is the relationship of unit cost (cost per metric ton) to production rate.

For plants requiring dechlorination of waste waters, cost estimates for dechlorination of plant effluents using sulfur dioxide are discussed in Section 11.6.3.

11.14 BASIS FOR REGULATIONS

11.14.1 Basis for BPT Limitations

BPT regulations are currently in effect for the diaphragm cell chlorine subcategory, 40 CFR 815.62(b). The Agency is proposing to revise the limitations, however, based on an increased unit flow rate.

Technology Basis

For BPT, the Agency is proposing limitations based on equalization, alkaline precipitation and settling of lead and asbestos-bearing wastes and neutralization and settling of all waste waters before discharge. All diaphragm cell chlorine plants are known to be using this technology (Level 1) or its equivalent.

Flow Basis

As described in Section 11.13.1, waste water streams at diaphragm cell plants are separated into two types, those that require treatment for asbestos and metals removal and those that do not require such treatment. From data presented in Table 11-20, the unit flow rate of 1.2 m3/kkg of cell room and cell wash wastes from one graphite anode plant was selected as the flow basis for wastes to be treated. Graphite anode plant data were used in this instance because the flows were higher than those of other plants and thus represent a conservative estimate of flow for other plants in the industry. Using available flow data the remaining waste streams total 7.6 m3/kkg as shown in Table 11-34. Thus the total unit flow discharge used in the development of effluent limitations is 8.8 m3/kkg.

TABLE 11-30. MODEL PLANT TREATMENT COSTS

Subcategory CHLORINE Diaphragm cell

Production 19,100 metric tons per year (21,057 tons per year)
54 metric tons per day (60 tons per day)
Waste water flow 68 cubic meters per day.

	LEVEL OF TREATMENT*		
	FIRST	SECOND	THIRD
A. INVESTMENT COST			
Construction	$57,100	$1,800	$2,250
Equipment in place, including piping, fittings, electrical work and controls.....	106,850	17,900	20,400
Monitoring equipment in place.....	9,000		
Engineering design and inspection.....	34,590	3,940	4,530
Incidentals, overhead, fees, contingencies...	34,590	3,940	4,530
Land.....	21,000		
TOTAL INVESTMENT COST	$263,130	$27,580	$31,710
B. OPERATION AND MAINTENANCE COST			
Labor and supervision.	$112,000	$14,000	$14,000
Energy.....	2,200	300	300
Chemicals.....	1,500		100
Maintenance.....	24,213	2,758	3,171
Taxes and insurance...	7,893	827	951
Residual waste disposal.....	5,800		
Monitoring, analysis and reporting.....	15,000	7,500	7,500
TOTAL OPERATION AND MAINTENANCE COST	$168,606	$25,385	$26,022
C. AMORTIZATION OF INVESTMENT COST	$39,394	$4,487	$5,159
TOTAL ANNUAL COST	$208,000	$29,872	$31,181

*First level represents the base cost of treatment system.
Other levels represent the incremental cost above base cost.

TABLE 11-31. MODEL PLANT TREATMENT COSTS

Subcategory CHLORINE Diaphragm cell

Production 95,500 metric tons per year (105,288 tons per year)
272 metric tons per day (300 tons per day)
Waste water flow 340 cubic meters per day.

	LEVEL OF TREATMENT*		
	FIRST	SECOND	THIRD
A. INVESTMENT COST			
Construction	$148,100	$2,900	$3,350
Equipment in place, including piping, fittings, electrical work and controls.....	219,700	27,000	29,500
Monitoring equipment in place.....	9,000		9
Engineering design and inspection.....	75,360	5,980	6,571
Incidentals, overhead, fees, contingencies...	75,360	5,980	6,571
Land.....	63,000		
TOTAL INVESTMENT COST	$590,520	$41,860	$46,002
B. OPERATION AND MAINTENANCE COST			
Labor and supervision.	$112,000	$14,000	$14,000
Energy.....	4,900	600	600
Chemicals.....	7,500		500
Maintenance.....	52,752	4,186	4,600
Taxes and insurance...	17,715	1,255	1,380
Residual waste disposal.....	29,000		
Monitoring, analysis and reporting.....	15,000	7,500	7,500
TOTAL OPERATION AND MAINTENANCE COST	$238,867	$27,541	$28,580
C. AMORTIZATION OF INVESTMENT COST	$85,827	$6,810	$7,484
TOTAL ANNUAL COST	$324,694	$34,351	$36,064

*First level represents the base cost of treatment system.
Other levels represent the incremental cost above base cost.

TABLE 11-32 MODEL PLANT TREATMENT COSTS

Subcategory CHLORINE Diaphragm cell

Production 191,000 metric tons per year (210,577 tons per year)
545 metric tons per day (601 tons per day)
Waste water flow 680 cubic meters per day.

	LEVEL OF TREATMENT*		
	FIRST	SECOND	THIRD
A. INVESTMENT COST			
Construction	$271,900	$4,800	$5,250
Equipment in place, including piping, fittings, electrical work and controls.....	295,500	43,500	46,000
Monitoring equipment in place.....	9,000		
Engineering design and inspection.....	115,280	9,660	10,250
Incidentals, overhead, fees, contingencies...	115,280	9,660	10,250
Land.....	123,000		
TOTAL INVESTMENT COST	$929,960	$67,620	$71,750
B. OPERATION AND MAINTENANCE COST			
Labor and supervision.	$112,000	$14,000	$14,000
Energy.....	8,000	600	600
Chemicals.....	15,000		1,000
Maintenance.....	80,696	6,762	7,175
Taxes and insurance...	27,898	2,028	2,152
Residual waste disposal.....	58,000		
Monitoring, analysis and reporting.....	15,000	7,500	7,500
TOTAL OPERATION AND MAINTENANCE COST	$316,594	$30,890	$32,427
C. AMORTIZATION OF INVESTMENT COST	$131,292	$11,001	$11,673
TOTAL ANNUAL COST	$447,886	$41,891	$44,100

*First level represents the base cost of treatment system.
Other levels represent the incremental cost above base cost.

TABLE 11-33. MODEL PLANT TREATMENT COSTS

Subcategory CHLORINE Diaphragm cell

COST ITEM	PRODUCTION (kkg/yr)	FLOW (m^3/day)	Annual Treatment Costs ($/kkg) LEVEL OF TREATMENT FIRST	SECOND	THIRD	FOURTH
Annual Operation and Maintenance	19,100	68	8.83	1.33	1.36	Not Applicable
	95,500	340	2.50	0.29	0.30	
	191,000	680	1.66	0.16	0.17	
Annual Amortization	19,100	68	2.06	0.23	0.27	
	95,500	340	0.90	0.07	0.08	
	191,000	680	0.69	0.06	0.06	
Total Cost	19,100	68	10.89	1.56	1.63	
	95,500	340	3.40	0.36	0.38	
	191,000	680	2.34	0.22	0.23	

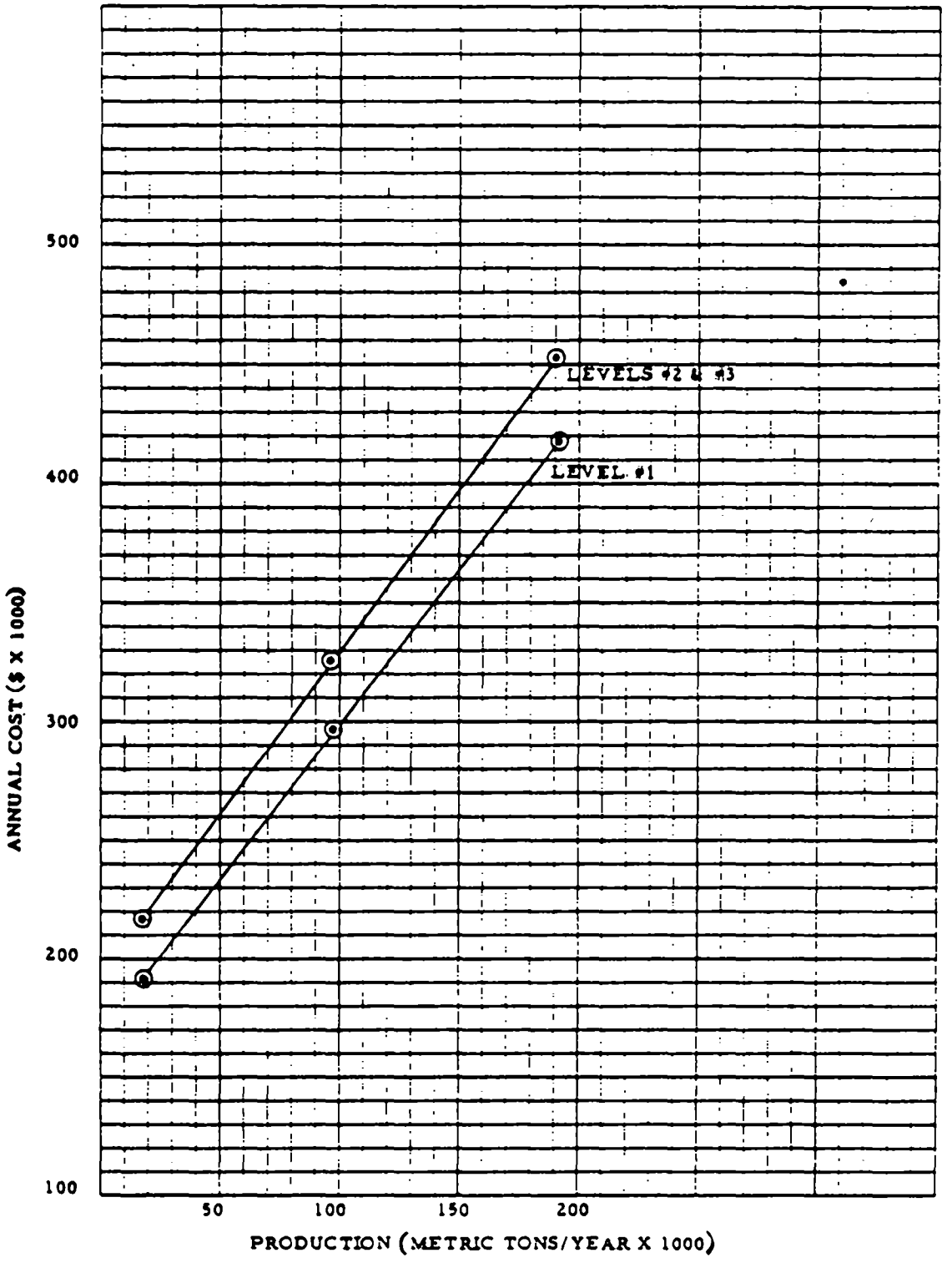

Figure 11-24. Annual treatment cost vs. production for the Chlorine Subcategory (Diaphragm Cell Process)

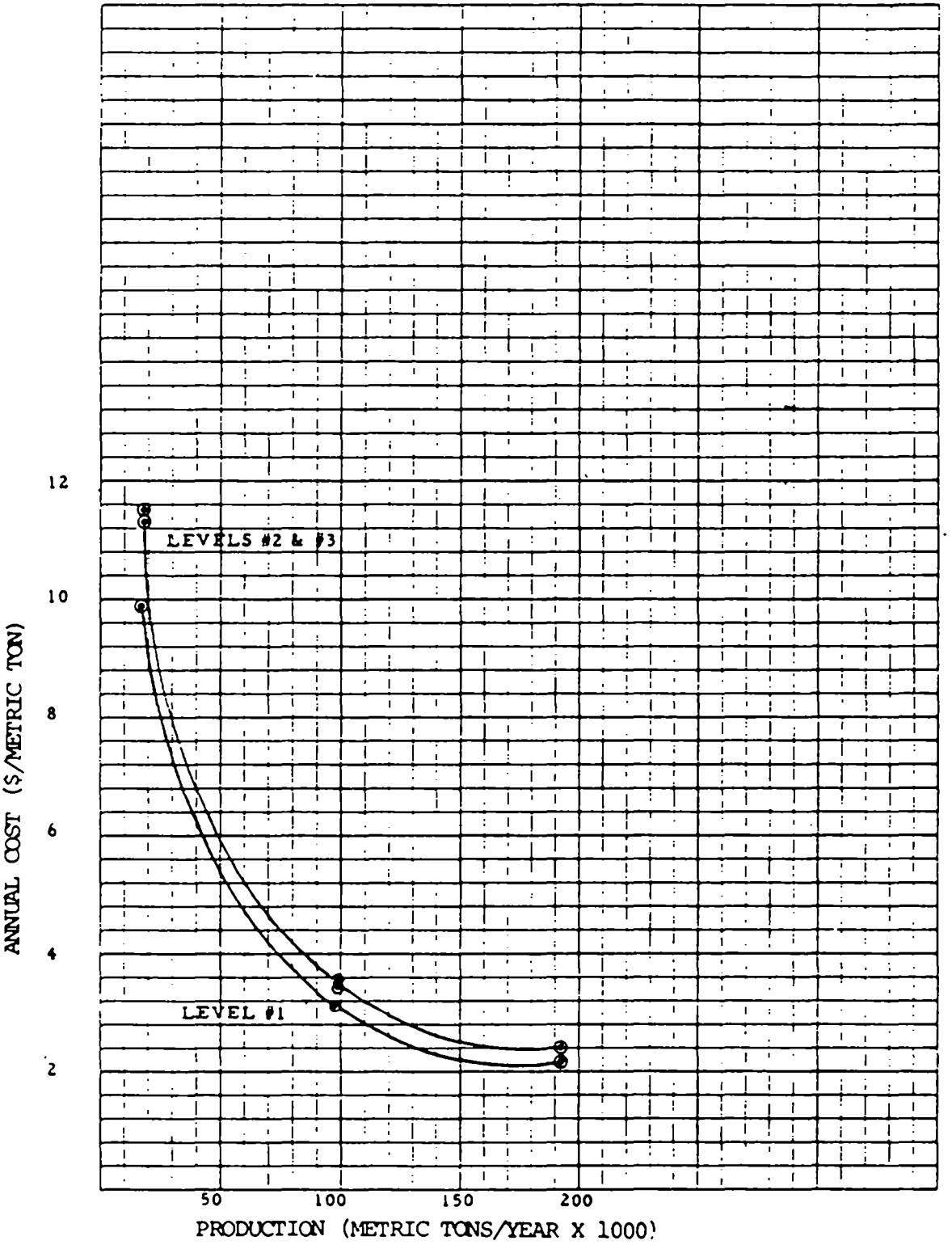

Figure 11-25. Annual unit treatment cost vs. production for the Chlorine Subcategory (Diaphragm Cell Process)

TABLE 11-34. SUMMARY OF UNIT FLOWS AT DIAPHRAGM CELL PLANTS

SUBCATEGORY	CHLORINE DIAPHRAGM CELL	
Stream Description	Unit Flow (m^3/kkg)	Data Source
Cell room and cell wash wastes	1.2	Graphite anode plant
Chlorine condensate	0.78	Graphite anode plant
Tail gas scrubber waste	0.11	Graphite anode plant
Caustic filter wash	5.4	Graphite anode plant
Brine filter wash	0.45	Graphite anode plant
Caustic cooling blowdown	0.86	Metal anode plants average
Spent sulfuric acid	0.01	Metal anode plants average
Total Unit Flow Discharge	8.8 m^3/kkg	

Selection of Pollutants to be Regulated

The selection of pollutants for which specific effluent limitations are being proposed was based on an evaluation of raw waste data from screening and verification sampling and on the treatability of toxic pollutants.

Table 11-35 presents the achievable concentrations of toxic metal pollutants (found at detectable levels in raw waste streams) using the available treatment technology options. Based on literature treatability data presented in Section 8.1 and summarized in Table 8-11, the concentrations reflect the lowest level achievable by these technologies. Also presented in the table are the maximum three-day average raw waste concentrations observed during the sampling program with an indication of the number of plants where treatable concentrations were exceeded.

Based on the occurrence of treatable levels of specific toxic metals, arsenic, cadmium, chromium, copper, lead, nickel and zinc were selected as candidate toxic pollutants proposed for BPT regulations. Antimony, mercury, and silver were detected but at less than treatable levels.

Basis of BPT Pollutant Limitations

Limitations are presented as both concentrations (mg/l) and loads (kg/kkg), and the relationship between the two is based on the unit flow rate (8.8 m3/kkg). The concentration basis therefore represents the concentration of the total plant discharge including both treated and untreated waste waters.

BPT proposed limitations are presented in Table 11-36.

Conventional Pollutants -

A. pH: The treated effluent is to be controlled within the range of 6.0 to 9.0. This limitation is based on the data presented in Appendix B of this report and the JRB Study (52).

B. TSS: The proposed BPT limitations for TSS are based on a summary of monitoring data from Plant #207 (3). The average discharge load of 0.30 kg/kkg is used to develop discharge limitations. Because variability factors for TSS were not available for this plant, factors obtained from the hydrofluoric acid subcategory were used. In that subcategory, where the same technology of alkaline precipitation and settling is used, the average variability factor for daily measurements of TSS is 3.5 and the average factor for 30-day averages is 1.7. Thus, utilizing the long-term average discharge load of 0.30 kg/kkg one obtains a maximum 30-day average load limit of:

TABLE 11-35. COMPARISON OF TOXIC METALS TREATABILITY WITH SCREENING AND VERIFICATION SAMPLING DATA

	Treatability[1] (mg/l)			Maximum Plant Raw Waste Average (mg/l)	Number of Plants[2] Exceeding Treatability
	Level 1	Level 2	Level 3		
Arsenic	0.5	0.5	0.05	0.30	3
Antimony	0.8	0.4	NA	0.011	0
Cadmium	0.1	0.05	0.01	0.037	2
Chromium	0.1	0.05	NA	1.9	4
Copper	0.5	0.4	0.05	17	4
Lead	0.3	0.05	0.05	21	4
Mercury	--[3]	--[3]	0.01	0.003	0
Nickel	0.2	0.1	0.05	22	6
Silver	0.4	0.2	0.05	0.018	0
Zinc	0.5	0.4	0.02	3.0	3

(1) Literature-based treatability estimates from Table 8-11.

(2) Of 6 plants, number exceeding treatability by sulfide/filter. (Level 3)

(3) Treatability with this technology not available.

NA Not Applicable

TABLE 11-36. PROPOSED LIMITATIONS
Chlorine - Diaphragm Cell

Best Practicable Control Technology Currently Available
Waste Water Flow: 8.8 m^3/kkg

Pollutant	Subcategory Performance (mg/l)	VFR(1)	Concentration Basis Max (mg/l) 30-day avg.	24-hr max.	Effluent Limit (kg/kkg) Max 30-day avg.	24-hr max.
Conventional Pollutants						
TSS	57	2.1	57	120	0.51	1.1
Toxic						
Arsenic	0.50(3)	2.6	0.50	1.3	(5)	(5)
Cadmium	0.10(3)	2.6	0.10	0.26	(5)	(5)
Chromium	0.10(3)	2.6	0.10	0.26	0.00088	0.0023
Copper	0.50(3)	2.6	0.50	1.3	0.0044	0.011
Lead	1.1(4)	2.6	1.1	2.9	0.010	0.026
Nickel	0.50(3)	2.6	0.50	1.3	0.0044	0.011
Zinc	0.50(3)	2.6	0.50	1.3	0.0044	0.011

(1) - VFR: ratio of the 24 hour variability factor to the 30-day variability factor

(2) - Verification sampling

(3) - Lower limit of literature treatability (Table 8-11): used when observed sampling data

(4) - Based on long-term monitoring data

(5) - No effluent limitation proposed

(0.30 kg/kkg) (1.7) = 0.51 kg/kkg

and a maximum daily limit of:

(0.30 kg/kkg) (3.5) = 1.1 kg/kkg

The concentration bases then are derived by applying the model plant flow rate of 8.8 m3/kkg to obtain a 30-day average concentration of 57 mg/l derived as follows:

$$\left(\frac{0.51\ kg/kkg}{8.8\ m3/kkg}\right)\left(\frac{1000\ mg/l}{kg/m3}\right) = 57/mg/l$$

and a daily maximum concentration of 120 mg/l derived from the variability factor ratio (VFR: 3.5/1.7 = 2.1) as follows:

(2.1) (57 mg/l) = 120 mg/l

Toxic Pollutants -

A. Lead: The proposed BPT limitations for lead are based on long-term monitoring data from one graphite anode plant as presented in Appendix A. The plant is achieving a long-term average lead discharge of 0.0064 kg/kkg.

Statistical analysis of monitoring data from the plant established a 30-day average variability factor of 1.6 and a 24-hour variability factor of 4.1. The ratio of the two variability factors, VFR, is 2.6. The proposed 30-day average limitation for lead was then obtained by multiplying the variability factor for 30-day averages by the long-term average load; i.e., 1.6 x 0.0064 kg/kkg = 0.010 kg/kkg. Similarly the daily maximum limitation was obtained by multiplying the daily maximum variability factor by the long-term average load; i.e., 4.1 x 0.0064 kg/kkg = 0.026 kg/kkg.

The concentration basis for lead is derived from the relationship between concentration (C), unit lead (L), and unit flow (Q).

$$C\ (mg/l) = \frac{L\ (kg/kkg)}{Q\ (m3/kkg)}\left(\frac{1000\ mg/l}{kg/m3}\right)$$

Thus the concentration basis for the maximum 30-day average for lead is:

$$\left(\frac{0.010\ kg/kkg}{8.8\ m3/kkg}\right)\left(\frac{1000\ mg/l}{kg/m3}\right) = 1.1\ mg/l$$

The concentration basis for the daily maximum limitation is obtained similarly or by applying the variability factor ratio (VFR) of 2.6 to the maximum 30-day average concentration:

$$(1.1\ mg/l)\ (2.6) = 2.9\ mg/l$$

Monitoring data from six diaphragm cell plants presented in Table 11-37 indicates that plants using metal anodes are meeting the BPT lead limitations. One of two graphite anode plants is meeting the limitations.

The limitations proposed for additional toxic pollutants are derived from two sources - sampling data and literature-based treatability estimates. The concentration bases are derived from effluent sampling unless the observed concentrations are below treatability estimates. In such cases the lower limit of the applicable treatability level was used (Table 8-1).

B. Chromium: Raw waste concentrations of chromium were observed as high as 1.9 mg/l (Table 11-26). Table 11-38 presents effluent data from the sampling of two diaphragm cell plants which indicate an achievable final discharge concentration of 0.05 mg/l chromium. Because this is below the treatability estimate of 0.10 mg/l with BPT technology (Table 11-35), the treatability concentration has been used as the 30-day average basis for deriving BPT limitations for chromium.

Because no long-term monitoring data is available for chromium in this industry, the same variability factor ratio (VFR) obtained from monitoring lead in the discharge at one plant is used to obtain daily concentration limits.

$$(0.10\ mg/l)\ (2.6) = 0.26\ mg/l$$

To obtain effluent lead limitations for chromium, the 30-day average concentration is multiplied by the unit flow:

$$(0.10\ mg/l)\ (8.8\ m3/kkg)\left(\frac{kg/m3}{1000\ mg/l}\right) = 0.00088\ kg/kkg$$

and the daily maximum effluent limit is

$$(0.26\ mg/l)\ (8.8\ m3/kkg)\left(\frac{kg/m3}{1000\ mg/l}\right) = 0.0023\ kg/kkg$$

C. Copper, Nickel, and Zinc: Raw waste concentrations of these metals were observed as high as 17 mg/l copper, 22 mg/l nickel, and 3.0 mg/l zinc. Table 11-35 indicates an achievable final discharge concentration of less than 0.10 mg/l for these metals. Because this is below the literature-based treatability estimate of 0.50 mg/l using BPT technology (Table 11-35), the treatability concentration has been used as the 30-day average basis for deriving BPT limitations for these metals.

TABLE 11-37. LEAD AND TSS DISCHARGES FROM SELECTED DIAPHRAGM CELL CHLORINE PLANTS [1]

SUBCATEGORY	CHLORINE - DIAPHRAGM CELL	
Plant	Lead Discharge kg/kkg	
	Average	Maximum
#589*	0.0020	0.030
#738*	0.0010	0.015
#261*	0.0025	0.019
#014*	0.0060	NA
#967 [3]	0.0064	0.026
#207	0.021	0.054
	TSS Discharge kg/kkg	
Plant	Average	Maximum
#014*	2.8 [2]	NA
#207	0.30	0.57

(1) From Reference 3

(2) Plant has "once-through" barometric condenser water

(3) Long Term Data Appendix A

* Plants with metal anodes

NA: Not Available

TABLE 11-38. TOXIC POLLUTANTS IN DIAPHRAGM CELL PLANT EFFLUENTS

	Effluent Concentration (mg/l)				
	Metal Anode Plant #261[1]		Graphite Anode Plant #967		
			Lead Treatment		Plant[2]
Pollutant	influent	effluent	influent	effluent	discharge
Arsenic	0.17	0.12	0.28	0.36	0.30
Cadmium	0.037	0.004	< 0.023	< 0.015	< 0.015
Chromium	1.9	< 0.050	0.10	< 0.050	< 0.050
Copper	17	< 0.025	1.6	0.030	0.031
Nickel	22	< 0.050	0.070	< 0.050	< 0.050
Zinc	1.5	< 0.025	0.93	< 0.10	0.15

(1) Cell wash waste filtered with coagulant to remove asbestos

(2) Flow-proportioned average discharge, consisting of lead treatment discharge and untreated filter backwashes, condensates and scrubber wastes

Using the same VFR of 2.6 the daily concentration limits are thus,

$$(0.50\ mg/l)\ (2.6) = 1.3\ mg/l$$

To obtain effluent load limitations for these metals, the 30-day average concentration is multiplied by the unit flow:

$$(0.50\ mg/l)\ (8.8\ m3/kkg)\left(\frac{kg/m3}{1000\ mg/l}\right) = 0.0044\ kg/kkg$$

and the daily maximum effluent limit is:

$$(1.3\ mg/l)\ (8.8\ m3/kkg)\left(\frac{kg/m3}{1000\ mg/l}\right) = 0.011\ kg/kkg$$

D. Arsenic and Cadmium: The maximum raw waste concentrations observed for arsenic and cadmium were below the literature-based treatability concentration for these metals (Table 11-35). For this reason only the concentration bases are presented in Table 11-36. The concentrations represent treatability for these metals and are meant to serve only as guidance should these pollutants be of concern.

11.14.2 Basis for BAT Effluent Limitations

Previous BAT regulations called for no discharge of process waste water pollutants. The regulations were remanded. The proposed BAT regulations provide for the discharge of pollutants following appropriate treatment of process wastes.

Technology Basis

Utilizing the cost estimates presented in this report the Agency has analyzed the cost effectiveness of the base level system (BPT) and the advanced level options (Levels 2 and 3) for conventional and toxic pollutant removal. The economic impact on the diaphragm cell chlorine subcategory has been evaluated in consideration of the technology basis for proposed BAT limitations. The need for a reevaluation of cost-effectiveness based on new cost data will be assessed by the Agency before promulgation.

For BAT the Agency is proposing limitations based on BPT technology with the addition of dual-media filtration (Level 2) and dechlorination of all process waste waters. Filtration will remove additional toxic metals and has been used successfully in the mercury-cell chlorine subcategory. Dechlorination is being included in BAT because the toxicity of chlorine to aquatic life is well documented and it is a pollutant of concern to the Agency (59). Two chlorine plants are known to be practicing

dechlorination. The Agency considered the addition of sulfide precipitation (Level 3) to the treatment of cell room wastes but rejected it because further reduction of toxic pollutants in this stream only would not substantially improve total discharge quality.

Flow Basis

The flow basis for BAT limitations is the model plant total discharge of 8.8 m3/kkg. This flow reflects that expected at chlorine plants using graphite anodes.

Selection of Pollutants to be Regulated

For BAT regulations, the Agency has selected the same seven toxic metals identified in the proposed BPT regulations, and total residual chlorine.

Basis of Pollutant Limitations

For BAT regulations, the Agency is proposing more stringent controls on the discharge of the seven toxic metals of concern on the basis of physical removal by filtration. Alkaline precipitation converts most dissolved metals into less toxic insoluble forms and excess alkalinity exists in most of the process wastes generated in this subcategory. Proposed BAT limitations are presented in Table 11-39.

Nonconventional Pollutant -

Chlorine: Total residual chlorine limits are based on the detectable concentration of chlorine (0.2 mg/l) and on performance of dechlorination in the electric utility industry (58) because treatment should remove essentially all chlorine. Thus the 30-day average limit was set at 0.20 mg/l.

The daily maximum limit for total residual chlorine was set at 0.34 mg/l based on an evaluation of long-term monitoring data and determination of variability factors for total residual chlorine as presented in Appendix A. The ratio of 24-hour maximum variability factors to 30-day average variability factors for two plants was 1.7, thus the maximum 30-day average is given by:

$$(0.20 \text{ mg/l})\ (1.7) = 0.34 \text{ mg/l}$$

The determination of load limitations for total residual chlorine (kg/kkg) was calculated based on the unit flow rate of 8.8 m3/kkg, thus the maximum 30-day average is given by:

TABLE 11-39. PROPOSED LIMITATIONS
Chlorine Diaphragm Cell
Best Available Technology
Waste Water Flow: 8.8 m^3/kkg

Pollutant	Treatability (mg/l)	VFR(1)	Concentration Basis (mg/l) Max 30-day avg.	24-hr max.	Effluent Limit (kg/kkg) Max 30-day avg.	24-hr max.
Nonconventional Pollutant						
Total Residual Chlorine	0.2	1.7	0.20	0.34	0.0018	0.0030
Toxic Pollutants						
Arsenic	0.50(3)	2.2	0.50	1.1	(5)	(5)
Cadmium	0.05(3)	2.2	0.05	0.11	(5)	(5)
Chromium(2)	0.05(3)	2.2	0.05	0.11	0.00044	0.00097
Copper(2)	0.40(3)	2.2	0.40	0.88	0.0035	0.0077
Lead(2)	0.22(4)	2.2	0.22	0.48	0.0019	0.0042
Nickel(2)	0.10(3)	2.2	0.10	0.22	0.00088	0.0019
Zinc(2)	0.40(3)	2.2	0.40	0.88	0.0035	0.0077

(1) - VFR: ratio of the 24 hour variability factor to the 30-day average variability factor

(2) - Also applicable for PSES limitations

(3) - Literature - based treatability estimate

(4) - Based on filtration for BPT subcategory performance

(5) - No effluent limitation proposed

$$(0.20\ mg/l)\ (8.8\ m3/kkg)\left(\frac{kg/m3}{1000\ mg/l}\right) = 0.0018\ kg/kkg$$

The 24-hour maximum limit was calculated similarly,

$$(0.34\ mg/l)\ (8.8\ m3/kkg)\left(\frac{kg/m3}{1000\ mg/l}\right) = 0.0030\ kg/kkg$$

Toxic Pollutants -

Dual media filtration of BPT effluent will significantly reduce suspended metal precipitates. BAT limitations for the toxic metals of concern are based on literature-treatability studies as presented in Section 8.1 and summarized in Table 8-11.

A. Lead: Filtration of the BPT effluent is estimated to result in an 80 percent reduction of lead (41) giving a final concentration of 0.22 mg/l. This value is used as the concentration basis for the maximum 30-day average limitation of 0.0019 kg/kkg. Application of the model plant discharge rate results in a loading of 0.0019 kg/kkg. That is,

$$(0.22\ mg/l)\ (8.8\ m3/kkg)\left(\frac{kg/m3}{1000\ mg/l}\right) = 0.0019\ kg/kkg$$

The variability factor ratio (VFR) of 2.2, used for BAT limitations, is from the analysis of mercury monitoring data in the mercury cell chlorine subcategory (Section 11.7.2). Mercury cell chlorine plants typically practice filtration of waste water and the value of 2.2 represents the average VFR of four plants.

The daily maximum limitation is then,

$$(2.2)\ (0.0019\ kg/kkg) = 0.0042\ kg/kkg$$

and the daily maximum concentration basis is:

$$(2.2)\ (0.22\ mg/l) = 0.48\ mg/l$$

B. Chromium: Filtration of the BPT effluent is estimated to reduce the chromium concentration by approximately 60 percent (41) to give a final concentration of 0.050 mg/l. This value is used as the concentration basis for the maximum 30-day average effluent limitation. Application of the model plant discharge rate results in a corresponding loading limitation of 0.00044 kg/kkg. That is,

$$(0.050\ mg/l)\ (8.8\ m3/kkg)\left(\frac{kg/m3}{1000\ mg/l}\right) = 0.00044\ kg/kkg$$

and, for the daily maximum limitation using the VFR value of 2.2, one obtains:

$$(2.2)\ (0.00044\ kg/kkg) = 0.00097\ kg/kkg$$

The corresponding concentration basis is:

$$(2.2)\ (0.050\ mg/l) = 0.11\ mg/l$$

C. Copper and Zinc: Filtration of the BPT effluent is estimated to reduce the copper and zinc concentrations by 20 percent (41) to give a final concentration of 0.40 mg/l. This value is used as the concentration basis for the maximum 30-day average effluent limitation. Application of the model plant discharge rate results in a loading limitation of 0.0035 kg/kkg. That is,

$$(0.40\ mg/l)\ (8.8\ m3/kkg)\left(\frac{kg/m3}{1000\ mg/l}\right) = 0.0035\ kg/kkg$$

and for the daily maximum limitation using the VFR value of 2.2, one obtains:

$$(2.2)\ (0.0035\ kg/kkg) = 0.0077\ kg/kkg$$

and the daily maximum concentration basis is:

$$(2.2)\ (0.40\ mg/l) = 0.88\ mg/l$$

D. Nickel: The addition of filtration to the BPT effluent is estimated to achieve a 50 percent reduction of the nickel concentration. The basis of the proposed BAT limitation is therefore 0.10 mg/l and results in a maximum 30-day average loading limitation of 0.00088 kg/kkg. That is,

$$(0.10\ mg/l)\ (8.8\ m3/kkg)\left(\frac{kg/m3}{1000\ mg/l}\right) = 0.00088\ kg/kkg$$

and the daily maximum is,

$$(2.2)\ (0.00088\ kg/kkg) = 0.0019\ kg/kkg$$

with a corresponding concentration basis of:

$$(2.2)\ (0.10\ mg/l) = 0.22\ mg/l$$

E. Arsenic and Cadmium: Filtration of BPT effluent will reduce the cadmium concentration to 0.050 mg/l but will not significantly reduce the arsenic concentration of 0.50 mg/l. Because maximum plant raw wastes were below these concentrations, no effluent limitations are being proposed.

Concentration values presented in Table 11-37 are intended for guidance only.

11.14.3 Basis for BCT Limitations

Technology Basis

Utilizing the cost estimates presented in this report, the Agency has analyzed the costs of BAT technology in removing conventional pollutants. This technology of dual-media filtration of all process waste water was found by the Agency to be cost effective in removing TSS. Proposed BCT limits for TSS are given in Table 11-40. This calculation is shown in Section 3.3.3.

Flow Basis

The flow basis for BCT limitations is the same 8.8 m3/kkg used for both BPT and BAT limitations.

Selection of Pollutants to be Regulated

BCT regulations only apply to total suspended solids (TSS) and pH.

Basis of Pollutant Limitations

TSS limitations are based on technology performance of filtration of waste water flow from the mercury cell segment of the chlorine industry. Appendix Table A-1 presents long-term TSS monitoring data from a chlorine plant practicing filtration of process wastes. The maximum 30-day average limitations are based on a 30-day average concentration of 12 mg/l using the diaphragm cell model plant discharge flow rate of 8.8 m3/kkg, namely:

$$(12\ \text{mg/l})\ (8.8\ \text{m3/kkg})\left(\frac{\text{kg/m3}}{1000\ \text{mg/l}}\right) = 0.10\ \text{kg/kkg}$$

The variability factor ratio for this plant was 1.9. Applying this value to the 30-day limit, one obtains a 24-hour maximum limit of:

$$(0.10\ \text{kg/kkg})\ (1.9) = 0.19\ \text{kg/kkg}$$

with a corresponding concentration basis of:

$$(12\ \text{mg/l})\ (1.9) = 23\ \text{mg/l}$$

TABLE 11-40. PROPOSED LIMITATIONS
Chlorine Diaphragm Cell
Best Conventional Technology
Waste Water Flow: 8.8 m^3/kkg

Pollutant	Treatability (mg/l)	VFR[1]	Concentration Basis Max (mg/l) 30-day avg.	24-hr max.	Effluent Limit Max (kg/kkg) 30-day avg.	24-hr max.
Total Suspended Solids[2]	12	1.9	12	23	0.10	0.20

(1) - VFR: ratio of the 24 hour variability factor to the 30-day variability factor

(2) - Limitations based on technology transfer from mercury-cell chlorine subcategory; long-term monitoring data from Appendix A-1

11.14.4 Basis for New Source Performance Standards

Technology Basis

The Agency is basing NSPS limitations on the BAT technology of alkaline precipitation filtration and dechlorination and on the performance achieved at plants using metal anodes. The conversion to metal anodes has largely eliminated the source of lead in waste waters, but residual lead contamination at a converted plant may exist for as long as a year or more. New metal anode plants should have relatively low lead concentrations in their waste waters. Proposed NSPS limits are presented in Table 11-41.

Flow Basis

The flow basis of 8.8 m^3/kkg used for BPT and BAT limitations is conservatively being used for new sources.

Selection of Pollutants to be Regulated

For NSPS regulations, the Agency initially considered the same BAT pollutants (seven toxic metals and total residual chlorine), pH and TSS. However, following an evaluation of raw waste characteristics at a new metal anode facility (shown in Table 11-42) where residual metals contamination from previous graphite anode use does not exist, only two toxic metals were selected for regulation. A discussion of the selection of these metals is presented below.

Basis of Pollutant Limitations

For NSPS regulations the Agency is proposing more stringent controls on the discharge of toxic metals of concern on the basis of lower raw waste loads generated at plants using metal anodes. NSPS proposed regulations are shown in Table 11-39.

Conventional and Nonconventional Parameters -

A. pH: The treated effluent is to be controlled within the range of 6.0 to 9.0. This limitation is based on the data presented in Appendix B of this report and the JRB Study (52).

B. TSS: Limitations for TSS are the same as in BAT regulations.

C. Total Residual Chlorine: Limitations for total residual chlorine are the same as in BAT regulations.

TABLE 11-41. PROPOSED LIMITATIONS
Chlorine Diaphragm Cell
New Source Performance Standards
Waste Water Flow: 8.8 m^3/kkg

Pollutant	Treatability (mg/l)	VFR(1)	Concentration Basis (mg/l) Max 30-day avg.	24-hr max.	Effluent Limit kg/kkg Max 30-day avg.	24-hr max.
Conventional and Non-Conventional						
TSS	12	1.9	12	23	0.10	0.20
Total Residual Chlorine	0.2	1.7	0.2	0.34	0.0018	0.0030
Toxic Pollutants						
Arsenic	0.50	2.2	0.50	1.1	(3)	(3)
Cadmium	0.050	2.2	0.050	0.11	(3)	(3)
Chromium(2)	0.050	2.2	0.050	0.11	0.00044	0.00097
Copper	0.40	2.2	0.40	0.88	(3)	(3)
Lead(2)	0.050	2.2	0.050	0.11	0.00044	0.00097
Nickel	0.10	2.2	0.10	0.22	(3)	(3)
Zinc	0.40	2.2	0.40	0.88	(3)	(3)

(1) - VFR: ratio of the 24 hour variability factor to the 30-day variability factor

(2) - Also applicable to PSNS limitations

(3) - No effluent limitation proposed

TABLE 11-42. COMPARISON OF RAW WASTE CHARACTERISTICS AT A NEW METAL ANODE PLANT WITH TREATABILITY OF TOXIC METALS

SUBCATEGORY	CHLORINE DIAPHRAGM CELL	
	Concentration(mg/l)	
Pollutant	Treatability(1)	Plant #738B(2) Raw Waste
Arsenic	0.50	0.011
Cadmium	0.050	<0.025
Chromium	0.050	0.066
Copper	0.40	0.12
Lead	0.050	0.11
Nickel	0.10	0.067
Zinc	0.40	0.093

(1)- Literature based treatability estimates using BAT technology of dual media filtration following alkaline precipitation of metals (Table 8-11)

(2)- Verification sampling at new metal anode facility

Toxic Pollutants -

Table 11-42 presents the results of verification sampling of raw wastes at a new chlorine plant using metal anodes. The total raw waste concentrations of toxic metals are, with the exceptions of chromium and lead, substantially below the estimated treatability of these metals using BAT technology, as shown in the table. For this reason only chromium and lead effluent limitations are proposed. Other metals are presented on a concentration basis for guidance purposes only.

Lead and Chromium: The treatability of both lead and chromium using the BAT technology of alkaline precipitation followed by dual-media filtration is estimated at 0.05 mg/l (Table 8-11). This value was used as the concentration basis for the proposed maximum 30-day average NSPS effluent limitations. Application of the model plant discharge rate results in a corresponding loading limit of 0.00044 kg/kkg. That is,

$$(0.050 \text{ mg/l})\ (8.8 \text{ m3/kkg})\left(\frac{\text{kg/m3}}{1000 \text{ mg/l}}\right) = 0.00044 \text{ kg/kkg}$$

and for the proposed daily maximum limitation using the VFR value of 2.2, one obtains:

$$(2.2)\ (0.00044 \text{ kg/kkg}) = 0.00097 \text{ kg/kkg}$$

The concentration basis for the daily maximum is,

$$(2.2)\ (0.050 \text{ mg/l}) = 0.11 \text{ mg/l}$$

11.14.5 Basis for Pretreatment Standards

Existing Sources

For Pretreatment Standards for Existing Sources (PSES), the Agency is proposing the same limitations as for BAT based on the identical treatment technology without dechlorination being used for indirect dischargers (see Table 11-39). Dechlorination is unnecessary because chlorination of publicly-owned treatment works influent is fairly common. The pollutants to be limited are chromium, copper, lead, nickel, and zinc.

New Sources

For Pretreatment Standards for New Sources (PSNS), the Agency is proposing the same limitations as for NSPS based on the identical treatment technology without dechlorination being used for indirect dischargers (see Table 11-41). Dechlorination is unnecessary because chlorination of publicly-owned treatment

works influent is fairly common. The pollutants to be limited are chromium and lead. The pollutants (arsenic, cadmium, copper, nickel, and zinc) are not being limited based on the assumption that all new plants will use metal anodes. As shown in Table 11-42, these pollutants are below treatability levels at such a plant.

SECTION 12

HYDROFLUORIC ACID INDUSTRY

12.1 INDUSTRY PROFILE

12.1.1 General Description

Hydrofluoric acid (Hydrogen fluoride-HF) is produced both as anhydrous and aqueous products. It is used in the manufacture of fluorocarbons which are used as refrigerating fluids, and plastics, for pressurized packing and as dispersants in aerosol sprays. It is used in the production of aluminum, in the refining and enriching of uranium fuel, pickling of stainless steel, in petroleum alkylation, and for the manufacture of fluoride salts. The industry data profile is given in Table 12-1. The status of regulations is given in Table 12-2.

12.1.2 General Process Description and Raw Materials

HF is the most important manufactured compound of the fluorine family in volume of production. Fluorspar (mainly CaF_2) and sulfuric acid are the raw materials used for its manufacture. Fluorspar and sulfuric acid react endothermically at 200-250 degrees C and the reaction time is 20-60 minutes. The reaction is given as:

$$CaF_2 + H_2SO_4 + \text{heat} = CaSO_4 + 2HF \qquad (1)$$

The reaction kinetics and the yield of product depends on the purity and fineness of the fluorspar. The concentration of sulfuric acid, the temperature of the reaction, and the ratio of sulfuric acid to fluorspar are among important variables.

Crude fluorspar, as mined, varies in CaF_2 content from 35 to 90 percent. The ore is upgraded by flotation which results in 98 percent CaF_2 being available for the production of HF. The analysis of a typical upgraded fluorspar is given as:

CaF_2	Minimum	97.5-98%
SiO_2	Maximum	1.0%
S	"	0.05%

TABLE 12-1 - SUBCATEGORY PROFILE DATA SUMMARY

SUBCATEGORY	HYDROFLUORIC ACID
Total subcategory capacity rate	363,000 kkg/year
Total subcategory production rate	261,800 kkg/year
Number of plants in this subcategory	9
308 Data on file for	8
With total capacity of	*
With total production of	177,000 kkg/year
Representing capacity	*
Representing production	68 percent
Plant production range:	
Minimum	7,300 kkg/year
Maximum	62,000 kkg/year
Average production	22,100 kkg/year
Median production	15,800 kkg/year
Average capacity utilization	83 percent
Plant age range:	
Minimum	7 years
Maximum	58 years
Waste water flow range:	
Minimum	0 cubic meters/day
Maximum	4,700 cubic meters/day
Volume per unit product:	
Minimum	0 cubic meters/kkg
Maximum	86 cubic meters/kkg

Sources of data are Stanford Research Institute, Directory of Chemical Producers, U.S.A., 1977, U.S. Department of Commerce, Current Industrial Reports, December 1977; Energy and Environmental Analysis, Inc.; and Draft Report, "Preliminary Economic Assessment of Effluent Limitations in the Inorganic Chemical Industry,"June, 1978 and "Economic Analysis of Proposed Revised Effluent Guidelines and Standards for the Inorganic Chemicals Industry," March, 1980.

* Data incomplete because certain plants did not respond to this question.

TABLE 12-2 - STATUS OF REGULATIONS - EFFLUENT LIMITATION GUIDELINES

SUBCATEGORY Hydrofluoric Acid

SUBPART H (40 CFR 415.80, 3/12/74)

		STANDARDS					
		BPCTCA*		BATEA*		NSPS*	
Product Process	Parameters	Max.[1] kg/kkg (mg/l)	Avg.[2] kg/kkg (mg/l)	Max.[1] kg/kkg (mg/l)	Avg.[2] kg/kkg (mg/l)	Max.[1] kg/kkg (mg/l)	Avg.[2] kg/kkg (mg/l)
Hydro-fluoric Acid	Fluoride	(30)	(15)	No discharge of pwwp[3]		No discharge of pwwp	
	TSS	(50)	(25)	No discharge of pwwp		No discharge of pwwp	

*Sections 415.82, 415.83, and 415.85 were remanded and are presently reserved (41 FR 51601, November 23, 1976).

[1]Max. = Maximum of any one day.

[2]Avg. = Average of daily values for thirty consecutive days shall not exceed.

[3]pwwp = Process wastewater pollutants.

H_2O	"	0.1%
$CaCO_3$	Principal remainder	

Silica is a highly objectionable contaminant, since each pound consumes 2.0 pounds of fluorspar and 3.3 pounds of sulfuric acid by the following reaction:

$$SiO_2 + 2CaF_2 + 2H_2SO_4 = SiF_4 + 2CaSO_4 + 2H_2O \qquad (2)$$

Sulfuric acid having a concentration as low as 93 percent or as high as 99 percent is generally used. Dilute sulfuric acid enhances better mixing and liberation of fluoride but has two disadvantages; viz., the dilute acid is very corrosive and the water present in the acid evaporates and distills off with the HF gas, thus reducing product concentration. Concentrated sulfuric acid (greater than 98 percent) offsets these disadvantages but creates new problems. The vapor pressure of concentrated sulfuric acid is sufficiently high to cause large amounts of sulfuric acid to be carried away by the HF. Excess sulfuric acid, when used, will leave with the gypsum as part of the residue.

HF generators are, in the majority of cases, externally fired rotary kilns in which acid and fluorspar are fed continuously through a screw conveyor at the forward end and gypsum is removed from the other end through an air lock. The product HF may discharge from either end. The theoretical amount of gypsum produced is 3.4 kg/kg of HF produced, but because of the impurities in the fluorspar the actual amount of gypsum produced is higher and varies from 3.6 to 4.8 kg/kg of HF.

One manufacturer uses a patented process to supply internal heat to the reactor. The heat is supplied by introducing sulfur trioxide (SO_3) and water (as steam). The exothermic heat liberated by the reaction of SO_3 and water is used for the heat required for HF generation. Thus a part of the sulfuric acid is supplied as SO_3.

The HF gas leaving the reactor is cooled in a precooler to condense high boiling compounds. The condensables are known as drip acid and largely consist of fluorosulfonic acid (HSO_3F) and unreacted sulfuric acid. In 1978, nine plants out of a total of eleven returned the drip acid to the reactor, while the remaining two sent the drip acid to the waste treatment plant. The HF gas from the precooler is cooled further and condensed in a cooler/refrigeration unit. The uncondensed gas containing the HF is scrubbed with sulfuric acid and refrigerated to recover the product. The scrubbed acid liquor is returned to the kiln, and residual vent gases are scrubbed further with water to remove HF and other fluoride compounds before they are vented to the atmosphere. The scrubber water is sent to the waste water treatment

plant. Figure 12-1 is a block flow diagram of the manufacturing process.

The crude HF is then distilled to remove the residual impurities, and the condensate, which is anhydrous HF, is stored in tanks. If aqueous HF is desired, the crude product is then diluted with water to form a 70 percent HF solution as the final product.

12.2 WATER USE AND WASTE SOURCE CHARACTERISTICS

12.2.1 Water Use

Water is used in HF production in noncontact cooling, air pollution control, product dilution, seals on pumps and kilns, and for equipment and area washdown. Although noncontact cooling constitutes the major use of water, water is also used, in a majority of cases, in the transport of gypsum as a slurry to the waste water treatment facility. The water for gypsum transport is provided by either reusing the water from the treatment facility or by using once-through cooling water. Table 12-3 summarizes the water usage found in this study.

12.2.2 Waste Sources

Gypsum Solids

Gypsum solids are generated as a by-product. The amount produced is in the range of 3.6 4.8 kg/kg of HF produced. The gypsum also contains small amounts of sulfuric acid, HF, and calcium fluoride. Minor amounts of other impurities present in fluorspar are also removed with the gypsum. In five out of eleven plants producing HF, gypsum is slurried with treated waste water, neutralized with lime or soda ash, and pumped to a gypsum storage pond. In one plant the gypsum slurry is pumped to the storage pond without treatment and in another plant partial neutralization is employed. Three plants transport the gypsum as a dry solid and dispose of it as a solid waste after mixing with lime for neutralization. The disposal method of one plant is not known. It should be noted that two of the eleven plants have recently discontinued HF production, one of which is in the group of five.

When gypsum solids from the kiln are slurried with water for treatment, the resulting stream constitutes the major source of waste water. When kiln residue is disposed of as a solid waste, scrubber waste water is the major source of waste. Table 12-4 gives the data for the direct and indirect

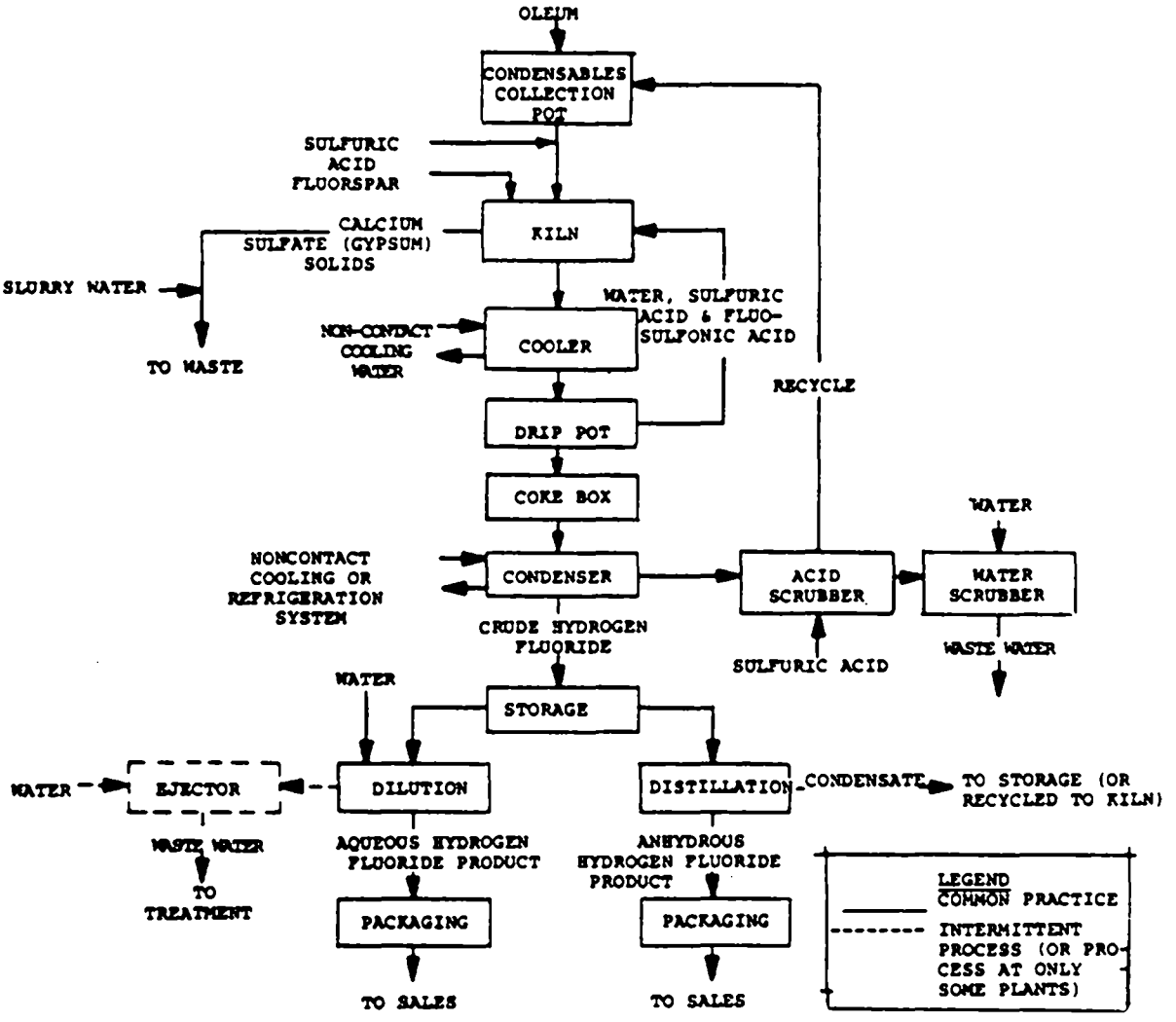

Figure 12-1. General process flow diagram for production of hydrofluoric acid.

TABLE 12-3. WATER USAGE IN THE HYDROFLUORIC ACID SUBCATEGORY

Source	Water Usage at Plants (m3/kkg of HF)							
	#987 (1)	#251 (1)	#753	#426	#120	#722	#167	#705 (1)
Non-contact Cooling	154	NA	63.5	110	NA	13.6	116	30.0
Gypsum Slurry Transport	NA	64.0	NA	*	NA	22.5	41.6	30.0
Maintenance, Equipment and Area Washdown	NA	2.40	2.11	NA	0.1	12.2	5.00	16.9
Air Pollution Control	7.90	14.4	4.23	NA	0.586	14.5	40.0	11.3

NA = Not Available

* = Not Applicable

(1) Discontinued HF production.

TABLE 12-4. WASTE WATER FLOW AND REUSE DATA FOR THE HYDROFLUORIC ACID SUBCATEGORY

Plant	Kiln Residue Handling (1)	Reuse for Kiln Residue Slurry (2) (Percent)	Influent to Treatment Facility (m3/kkg) HF	Treated Effluent Discharged (m3/kkg) HF
#120	D	— (4)	9.10	9.10
#426	D	— (4)	0	Not available
#987 (3)	D	— (4)	13.6	13.6
#837	S	0	120	120
#967	S	0	125	125
#251 (3)	S	0	84.7	84.7
#705 (3)	S	30.0-35.0	58.2	39.3
#167	S	47.0	166	88.2
#753	S	65.0	31.4	11.1
#928	S	83.0	55.5	9.40
#664	S	94.0	96.6	5.80
#722	S	92.0-100	120	7.20
Averages: (S only)		42.8 percent	95.4 m3/kkg	54.6 m3/kkg

(1) D = Dry disposal S = Slurried to treatment

(2) Percent of waste water flow reused for residue slurry after treatment.

(3) Dicontinued HF production.

(4) Not Applicable.

process contact waste water going to treatment facilities. Noncontact cooling water has not been included in the figures given in Table 12-4. Figure 12-2 is a graphical representation of production versus waste water flow to in-plant treatment facilities for plants whose waste water includes the gypsum slurry and for those practicing disposal of kiln residue as a solid waste.

Drip Acid

This is formed in the first stage of the cooling (i.e., in the precooler) of the gases emitted from the kiln. Drip acid mostly contains high boiling compounds consisting of complex fluorides, especially fluorosulfonic acid, and small amounts of hydrofluoric acid, sulfuric acid, and water. Fluorosulfonic acid is formed by reaction between hydrofluoric acid and sulfuric acid in the absence of water. The quantity of drip acid produced is relatively small. In the plants which recycle the drip acid back to the reactor, it is mixed with the sulfuric acid feed stream before it enters the kiln where it is hydrolyzed to form sulfuric acid and hydrofluoric acid. The critical factors for hydrolysis are temperature and retention time and enough water is normally present in the kiln for the reaction.

Noncontact Cooling Water

Noncontact cooling water is used for precooling the product gases emitted from the kiln. The possibility of product or other process compounds leaking into the cooling water is very small; however, in the event that the cooling water does become contaminated, the proposed limitations for fluoride may be exceeded. Depending on the merits of the situation, the upset and bypass provisions may apply. In some plants, the cooling water is used to transport the waste gypsum.

Scrubber Waste Water

Scrubber water is another waste water source, and in plants which practice dry disposal of gypsum, scrubber water constitutes the predominant and major source of waste water. It contains fluoride, sulfate, and acidity. The fluoride is present as HF, silicon tetrafluoride (SiF_4), and hexafluosilicic acid (H_2SiF_6). Silica present in the ore as an impurity reacts with HF forming silicon tetrafluoride as shown in Equation 3.

$$SiO_2 + 4HF = SiF_4 + 2H_2O \qquad (3)$$

In the scrubber, the tetrafluoride is converted to hexafluosilicic acid according to the following equations:

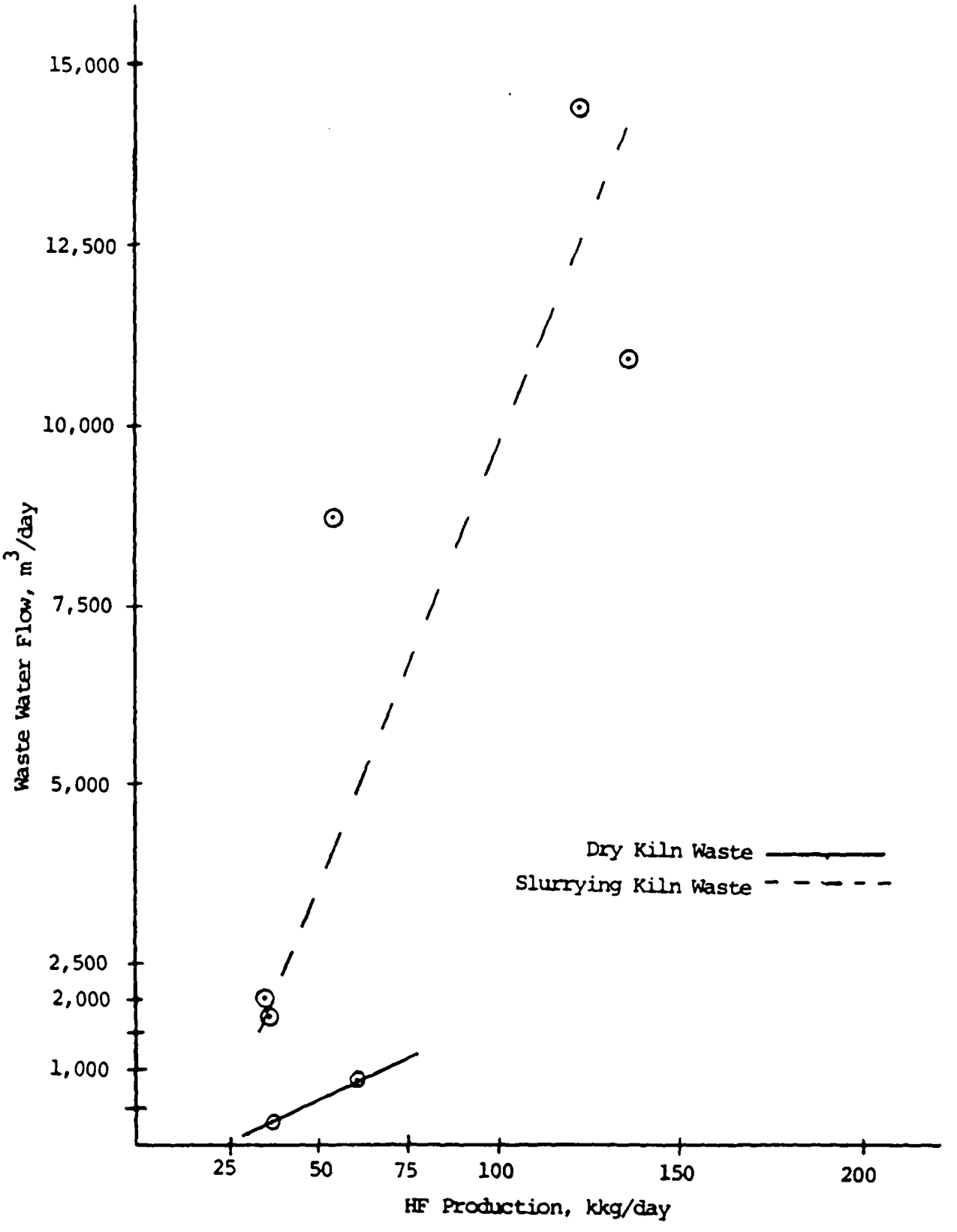

Figure 12-2. Production versus waste flow data for HF plants.

$$SiF_4 + 2HF = H_2SiF_6 \quad (4A)$$

$$3SiF_4 + 2H_2O = 2H_2SiF_6 + SiO_2 \quad (4B)$$

Distillation Wastes

The distillation waste generally contains HF and water. In some cases the vent gases from the distillation column are scrubbed before they are emitted to the atmosphere, and the resulting scrubber water requires treatment.

The range of waste water quality of the different streams generated from the production of HF is summarized in Table 12-5. The data are taken from the prior development documents, 308 Questionnaire responses, and industry visits.

Other Solid Wastes

The total solids generated from the process and the treatment system consist of gypsum and the fluoride precipitated as calcium fluoride. Table 12-6 gives the amount of suspended solids generated from the process and the quantity of total suspended solids generated at the waste water treatment plant for the HF plants visited in screening and verification. The data indicate that the gypsum waste constitutes more than 95 percent of the total solids produced. Table 12-7 gives the amount of gypsum solids produced at different HF manufacturing facilities. The data shows that 3.8 to 4.7 kg gypsum solids are produced per kg of product.

12.3 DESCRIPTION OF PLANTS VISITED AND SAMPLED

12.3.1 Screening

Plant #705 was visited and process waste water samples were collected and analyzed for conventional, nonconventional and toxic pollutants. The process used at this site is similar to the conventional HF manufacturing process described earlier. The drip acid is sent to the waste water treatment facility and the gypsum produced from the reactor is slurried with water and also sent to the treatment facility. The waste waters from the HF production facility are combined with the aluminum fluoride plant waste waters. The combined raw waste water is treated with lime and sent to settling ponds before discharge. Figure 12-3 shows the general process and the locations of the sampling points. Table 12-8 gives the flow data and the total suspended solids (TSS) and fluoride emissions.

TABLE 12-5. WASTE FLOW FROM HYDROFLUORIC ACID MANUFACTURING PLANTS

Source of Waste Water	Flow in m^3/kkg of Hydrofluoric Acid Plants								
	#251 (1)	#987 (1)	#753	#426	#120	#722	#167	#705 (1)	#837
Gypsum Slurry	64.0	Dry disposal	NA	Dry disposal	Dry disposal	(Total Recycle)	122	(Total Recycle)	6.50
Drip Acid	0.0490	0	0	0	0	0	NA	0.0180	0
Scrubber Waste Water	14.4	8.30	2.30	NA	0.624	(Total Recycle)	40.0	11.3	1.12
Other *	0.530	0.530	8.40	NA	5.55	NA	5.20	22.5	NA

(1) Discontinued HF production

NA = Not Available

* Other does not include wasteflows from storm water runoff.

TABLE 12-6. SOLID WASTE GENERATED AT THE HYDROFLUORIC ACID PLANTS SAMPLED

Plant	Gypsum Solids Going To Treatment Facility (kg/kg of HF)	Total Solids Produced (kg/kg of HF)
#705 (1)	4.73	4.78
#251 (1)	3.81	NA
#167	3.94	NA

(1) Discontinued HF production.

NA = Not Available

TABLE 12-7. GYPSUM SOLIDS PRODUCTION IN THE HYDROFLUORIC ACID SUBCATEGORY

Plant	Kiln Residue Produced (kg/kg of HF)	Kiln Residue Disposal/Treatment Method
#837	3.86	S
#705 (1)	4.73	S
#167	3.94	S
#722	NA	S
#120	NA	D
#426	4.00	D
#987 (1)	4.13	D
#251 (1)	3.81	S
#753	NA	S
#967	NA	S
#928	NA	S

S = Slurried with water and sent to wastewater treatment facility.

D = Dry disposal.

NA = Not Available.

(1) Discontinued HF production.

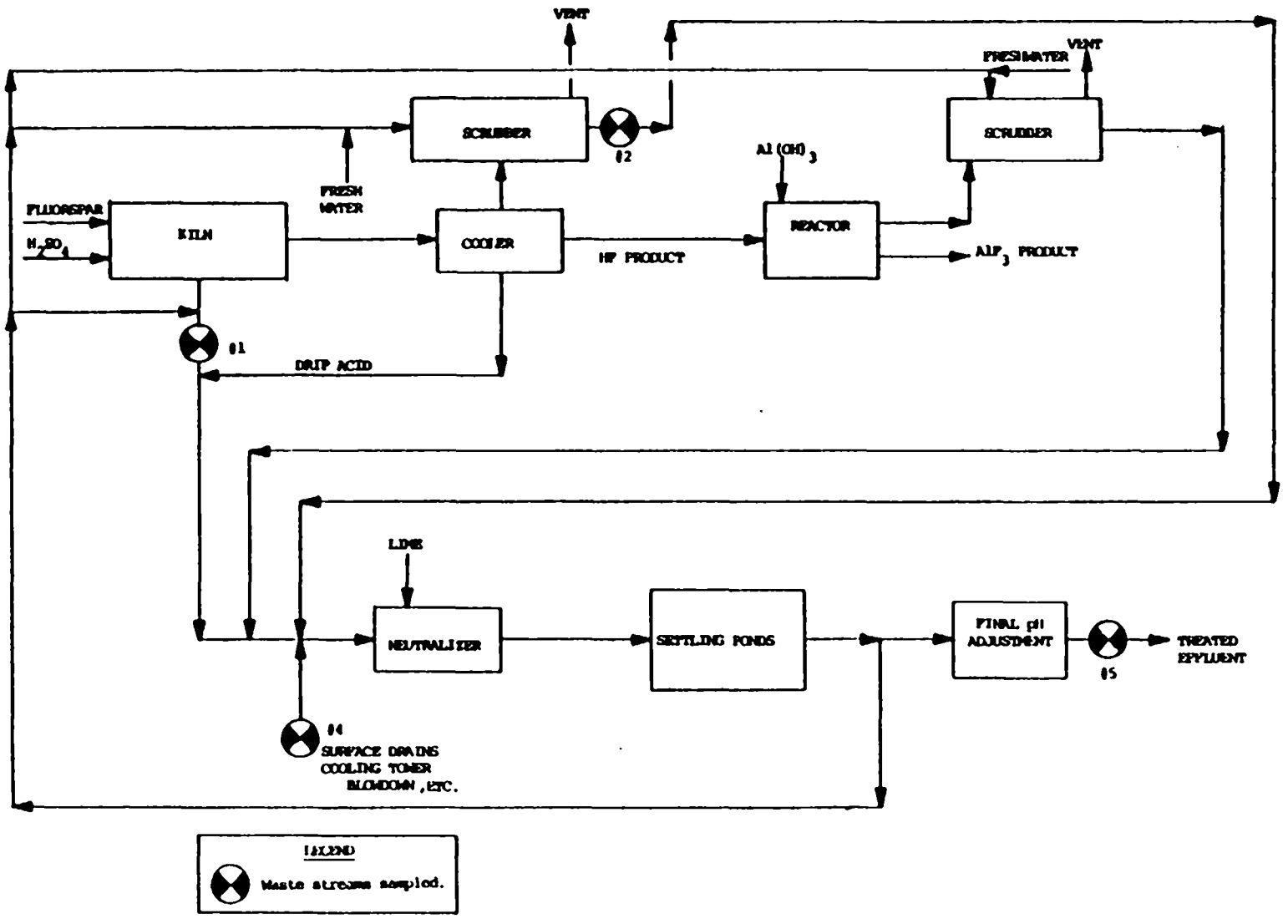

Figure 12-3. General process flow diagram at plant #705 showing the sampling points. Hydrofluoric acid manufacture.

TABLE 12-8. FLOW AND POLLUTANT CONCENTRATION DATA OF THE SAMPLED WASTE STREAMS OF PLANT #705 PRODUCING HYDROFLUORIC ACID[1]

Stream No.	Sampled Stream Description	Screening Data[2] Flow (m^3/kkg of HF)	Fluoride (kg/kkg of HF)	Total Suspended Solids (kg/kkg of HF)
1	Kiln Slurry	26.6	15	4700
2	Scrubber Waste Water	10.0	9.6	0.070
3	Surface Drains Cooling Tower Blowdown	20.0	6.9	3.9
4	Treated Effluent	23.3[3]	1.6	1.9

(1) This plant has discontinued the production of HF since the time of sampling.

(2) One 72-hour composite sample of each waste water stream.

(3) The discharged effluent consists of the treated waste waters from hydrofluoric acid and aluminum fluoride plants.

12.3.2 Verification

The same streams at Plant #705 were sampled again in the verification phase. The variation in the flow of the streams in the two sampling phases was negligible. Table 12-9 gives the TSS and fluoride load summary of the sampled streams.

Two more HF plants (Plant #251 and #167) were sampled in the verification phase. The drip acid at both facilities is also sent to the waste treatment plant and the hydrofluoric acid waste waters are combined with aluminum fluoride plant waste for treatment. In addition to drip acid, Plant #251 waste water consists of scrubber water, gypsum slurry, and plant area hose down. The treatment consists of gypsum ponds where the suspended solids are removed. The overflow from the last gypsum pond is neutralized and the pH adjusted with wastes from other product lines. Figure 12-4 is a block diagram of the process showing the sampling locations at Plant #251.

At Plant #167, the major raw waste sources are the kiln waste slurry, the absorber tails from the condensate (drip acid) recycle system, and the ejector water which is used to quench the off-gases from the absorber. All three of these waste streams are collected in a common neutralization pit where lime slurry is added. The waste then flows into a series of three lagoons for solids removal and final pH adjustment prior to discharge. Most of the gypsum settles out in the first lagoon and the overflow enters the second lagoon where commingling with wastes from other processes takes place. Verification sampling data from this plant were obtained from four sampling points. These are: 1) the kiln waste slurry, 2) the absorber tails, 3) the ejector water, and 4) the effluent from the first lagoon. The fourth sampling point is the last point at which all waste water originating in the HF plant can be intercepted.

12.3.3 Summary of the Toxic Pollutant Data

Eleven toxic pollutants were found in the raw waste samples from HF Plant #705. They were also verified at three other typical HF plants practicing BPT treatment. No organic toxic pollutants were found at detectable levels. The results were:

TABLE 12-9. FLOW AND POLLUTANT CONCENTRATION DATA OF THE SAMPLED WASTE STREAMS FOR PLANTS #705, #251, AND #167 PRODUCING HYDROFLUORIC ACID

Plant	Stream No.	Sampled Stream Description	Verification Data[1] Flow (m^3/kkg of HF)	Fluoride (kg/kkg of HF)	Total Suspended Solids (kg/kkg of HF)
#705[2]	1	Kiln Slurry	26.6	3.8	4700
	2	Scrubber Waste Water	10.0	1.5	0.019
	4	Surface Drains Cooling Tower Blowdown	20.0	3.4	4.0
	5	Treated Effluent	23.3[3]	0.54	0.040
#251[2]	5	AHF Plant Hosedown	1.20	1.9	0.26
	6	SO_2 Scrubber Waste	14.4	0.31	0.10
	2	Gypsum Pond Inlet	84.7	58	3800
	3	Gypsum Pond Outlet	84.7	27	0.80
#167	1	Kiln Slurry	122	4.9	170
	2	Ejector & Absorber Unit Wastes from Kilns #1,#2, and #4	25.0	14	0.36
	3	Ejector & Absorber Unit Wastes from Kilns #5 and #6	14.6	20	0.41
	4	Effluent from First Lagoon	162	11	22

(1) Three 24-hour composite samples of each waste water stream.

(2) These plants have now discontinued their HF production.

(3) Consists of the combined flow from hydrofluoric acid and aluminum fluoride plants.

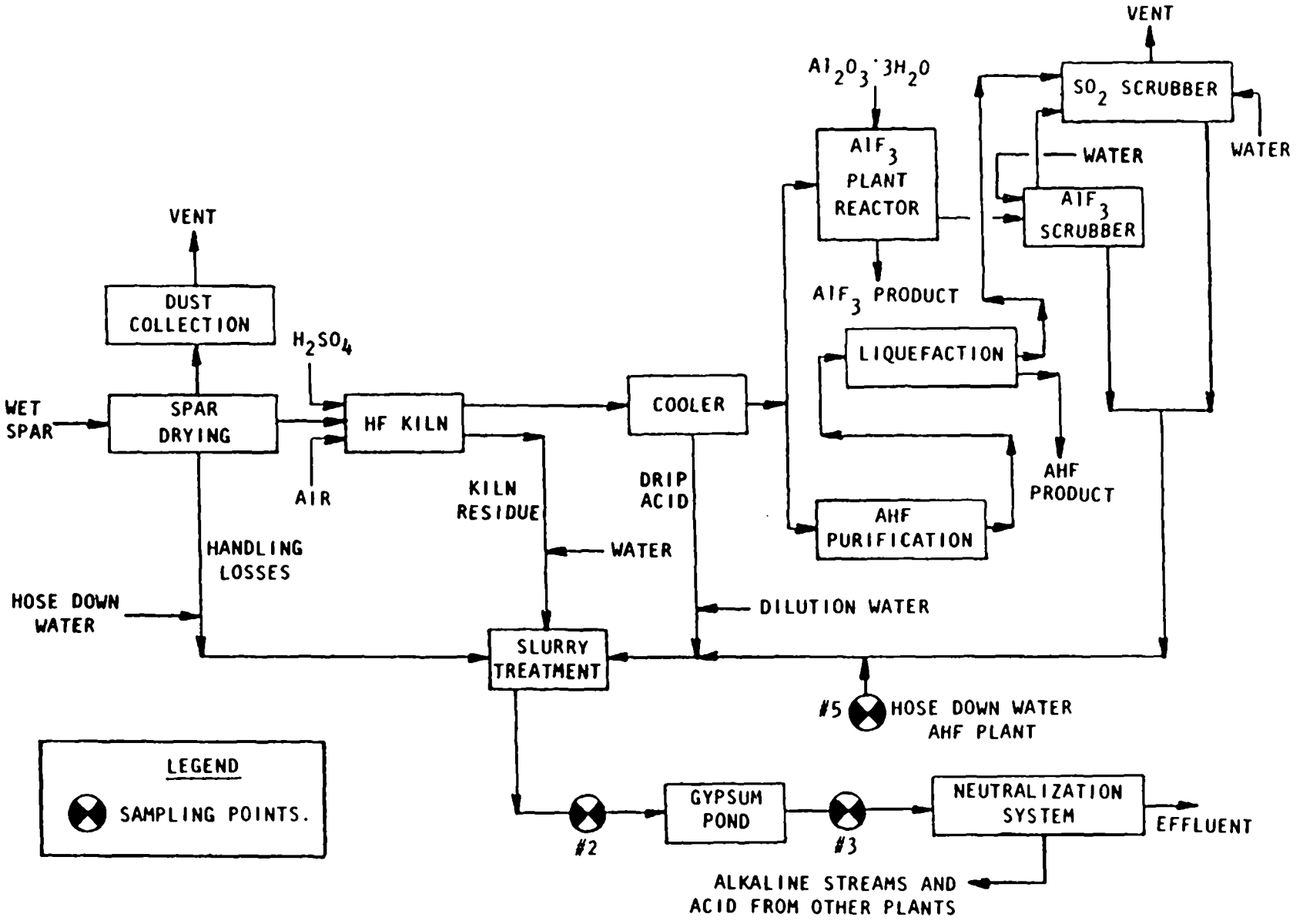

Figure 12-4. General process flow diagram at Plant #251 showing the sampling points. Hydrofluoric acid manufacture.

Pollutant	Maximum Raw Waste Concentrations Observed (µg/l) Screening Plant #705	Verification Plants #705, #251, #167
Copper	770	600
Lead	5200	200
Selenium	25	230
Zinc	8100	11000
Antimony	70	2800
Arsenic	10	160
Cadmium	2.0	60
Chromium	73	1200
Mercury	2.0	43
Nickel	150	2000
Thallium	5.5	63

Section 5.1.2 of this report describes the methodology of the screening and verification sampling program. In the Hydrofluoric Acid industry, a total of 12 days of sampling were conducted at Plants #705, #251, and #167. Sixteen different sampling points were involved covering the raw waste source, the various raw waste streams, and the treated effluents at these plants. The evaluation of toxic metal content of these process related waste streams was based on 572 analytical data points. The screening for toxic organic pollutants at Plant #705 generated an additional 635 analytical data points. The daily raw waste loads were calculated from the waste stream flow rates measured or estimated at the time of sampling and the measured pollutant concentration.

That is,

Daily loading (as kg of pollutant per day) $= \frac{(C)(Q)}{1000}$

Where:

C is the concentration of the pollutant expressed in units of mg/l (Note: kg/m3 = 1000 mg/l), and

F is the waste stream flow rate expressed in units of m3/day. (m3, a cubic meter, is equal to 264.2 U.S. gallons)

Similarly, the unit loadings were calculated from the reported hydrofluoric acid production rate, the waste stream flow rate, and the measured pollutant concentration.

Unit loading (as kg of pollutant per kkg of hydrofluoric acid) $= \frac{(C)(Q)}{1000(P)}$

Where C and F are the same as described above, and P is the hydrofluoric acid production rate expressed in units of kkg/day. (kkg is 1000 kg, a metric ton, which is equal to 2205 lbs.)

The minimum, average, and maximum values are based on data from those plants where the particular pollutant was found at concentrations greater than the analytical detection limits and significant in that it could conceivably be treated by an available treatment technology regardless of economic considerations.

In Table 12-10, the toxic pollutant raw waste data are presented as the average daily concentrations and the unit loading found at the individual plants. The overall averages are also shown and were subsequently used in the calculations of the average daily loadings and the average unit loadings shown in Table 12-11 along with the corresponding minimum and maximum values.

Based on the total annual production of this subcategory and the average waste load generated per unit product, the estimated total toxic pollutant raw waste loads generated each year for this subcategory are as follows:

Pollutant	Waste Load (kg/year)
Copper	6600
Lead	10000
Selenium	260
Zinc	110000
Antimony	8900
Arsenic	1400
Cadmium	79
Chromium	4700
Mercury	130
Nickel	10000
Thallium	840

12.4 POLLUTION ABATEMENT OPTIONS

12.4.1 Toxic Pollutants of Concern

Toxic pollutants in raw waste waters and slurries typical of the HF industry include the heavy metals often found as impurities in fluorspar. These metals are zinc, lead,

TABLE 12-10. TOXIC POLLUTANT RAW WASTE DATA

SUBCATEGORY: HYDROFLUORIC ACID

Average Daily Pollutant Concentrations and Loadings at Plants Sampled (1)

(mg/l)
(kg/kkg of Anhydrous HF)

	#705(S)	#705(V)	#251(V)	#167(V)	Overall Average
Antimony	0.018	0.010	0.12	0.74	0.22
	0.0010	0.00057	0.010	0.12	0.033
Arsenic	0.051	*	0.11	0.028	0.062
	0.0029	*	0.0091	0.0046	0.0055
Cadmium	0.0014	0.0060	*	0.0030	0.0035
	0.000080	0.00034	*	0.00047	0.00030
Chromium	0.062	0.26	0.47	0.074	0.22
	0.0035	0.015	0.040	0.012	0.018
Copper	0.41	0.26	0.12	0.32	0.28
	0.023	0.015	0.010	0.051	0.025
Lead	2.47	0.044	0.059	0.062	0.66
	0.14	0.0025	0.0050	0.010	0.039
Mercury	0.00090	0.0053	0.018	0.0010	0.0060
	0.000050	0.00030	0.0015	0.00016	0.00050
Nickel	0.062	0.48	1.18	0.15	0.47
	0.0035	0.027	0.10	0.025	0.039
Selenium	0.0070	*	0.017	0.0074	0.011
	0.00040	*	0.0014	0.0012	0.0010
Thallium	*	*	0.039	0.019	0.029
	*	*	0.0033	0.0030	0.0032
Zinc	4.0	0.21	0.28	8.2	3.2
	0.23	0.012	0.024	1.3	0.41

S - Screening data from one 72-hour composite sample of individual or combined raw waste streams.
V - Verification data from three 24-hour composite samples, averaged, from each raw waste sampling point.
* - Concentration below significant level.
(1) The methodology of the sampling program is described in Section 5.1.2, and Section 12.3.3 presents the scope of sampling in the Hydrofluoric Acid industry.

TABLE 12-11. SUMMARY OF RAW WASTE LOADINGS FOUND IN SCREENING AND VERIFICATION SAMPLING

SUBCATEGORY: HYDROFLUORIC ACID

Pollutant	Daily Loadings (kg/day) Minimum	Average	Maximum	Unit Loadings (kg/kkg) Minimum	Average	Maximum	No. Of Plants Averaged*
Toxic							
Antimony	0.023	2.0	6.4	0.00057	0.034	0.12	4
Arsenic	0.012	0.50	1.2	0.00030	0.0055	0.0090	3
Cadmium	0.0031	0.014	0.025	0.000077	0.00030	0.00047	3
Chromium	0.15	1.7	5.4	0.0035	0.018	0.040	4
Copper	0.60	1.4	2.80	0.0096	0.025	0.051	4
Lead	0.10	1.8	5.4	0.0025	0.039	0.14	4
Mercury	0.0021	0.057	0.21	0.000050	0.00050	0.0015	4
Nickel	0.14	4.1	14	0.00035	0.039	0.10	4
Selenium	0.016	0.093	0.20	0.00040	0.0010	0.0014	3
Thallium	0.16	0.31	0.45	0.0030	0.0032	0.0033	2
Zinc	0.49	21	72	0.012	0.41	1.3	4
Conventional & Nonconventional							
TSS	190000	310000	520000	3800	4200	4800	3
Fluoride	13	2900	7900	8.8	34	58	4

* Only those plants where the pollutant was observed at significant levels were included.

nickel, antimony, chromium, arsenic, copper, and selenium. Raw waste waters from plants practicing dry disposal of kiln wastes may include some of the same heavy metals in scrubber and area washdown wastes, but in considerably smaller amounts, since the spent ore is hauled as a solid waste and bypasses the waste water treatment facilities. Although the fluorosulfonate anion is found in HF wastes containing drip acid, organic compounds are not anticipated in waste waters from this industry. No toxic organic pollutants were found at significant levels.

12.4.2 Process Modifications and Technology Transfer Options

1. Gypsum produced in the kiln can be disposed of as a solid waste instead of being slurried with water and sent to the waste water treatment facility. The solids in this case are mixed with lime and stored in piles on the land surface until alternative disposal methods are found or the site abandoned. Although the dry disposal method is labor intensive (involving transporation and landfill operating cost), it has been found to be less expensive due to the reduced initial capital requirement and operating costs relative to the wet slurry method which requires a more extensive system of pipes, pumps, and on-site impoundments.

2. The use of soda ash in place of lime for neutralization has some advantages. It eliminates or reduces the problem of scale formation in the pipelines and scrubbers when the treated waste water is recycled. It offers a faster reaction time and better control of pH than lime. Even though the cost of soda ash is higher than lime, soda ash has been found overall to be a less expensive alternative at some plants. One plant reported that a combination of brine and soda ash has been found to present the best alternative for operation of the recycle system at minimum cost. After the use of soda ash, the treated effluent water can be totally recycled, either to the scrubber or to the kiln for transportation water for the gypsum.

As the pH approaches 6, sodium in soda ash replaces calcium present in the gypsum waste. This frees enough calcium ion to precipitate fluoride as calcium fluoride. Where the scrubber water is the predominant source of waste water, the water has to be treated first with enough lime to precipitate fluoride as calcium fluoride. Soda ash can then be added to the supernatant to precipitate calcium followed by neutralization with HCl to reduce scaling problems.

3. Two out of a total of 11 plants manufacturing hydrofluoric acid send the drip acid to the waste water treatment facility. The rest of the plants recycle it to the

reactor. When discharged to the waste treatment system, the fluorosulfonic acid does not hydrolyze and leaves with the treated effluent as a complex fluoride in soluble form. The total fluoride concentration of the effluent will be higher for the plants discharging drip acid compared to those which do not, after the same neutralization treatment. The two plants discharging drip acid to waste looked into the feasibility of returning it to the kiln, but because of the unique design of the kilns, they found it to be economically unattractive. Bench scale studies have shown that the drip acid can be hydrolyzed to free the HF.

$$HSO3F + H2O + heat = H2SO4 + HF \quad (5)$$

The two plants not returning the drip acid to the kiln should be able to hydrolyze the material in a separate unit before commingling it with other wastes, thus avoiding the treatability problem associated with complex fluorides.

12.4.3 Best Management Practices

1. Runoff can be collected from raw material and product storage, process, and impoundment areas. It should be treated with other process waste at the waste water treatment facility. Leachate and permeate control needs to be practiced on the solid waste stored in many plant premises as gypsum piles. There is a risk that uncontrolled stockpiling may contaminate the local ground water.

2. Ponds designed for solids removal must be deep enough to have a minimum of disturbance from wind and rain. In those areas where the rainfall rate exceeds yearly evaporation, the collection of runoff from raw material, product storage, process, and impoundment areas may lead to serious water balance problems. Recycle ponds would have to be designed to handle this excess loading.

12.4.4 Prevailing Control and Treatment Practices

Plant #705 combines the hydrofluoric acid wastes, including the gypsum slurry, with aluminum fluoride waste. The combined waste water, after neutralization, is sent to settling lagoons before discharge. This plant was visited in both the screening and verification phases of the project and a fuller description of waste treatment practice is given below.

Plant #837 combines the gypsum slurry and plant area hosedown waste water with the equipment washings, leaks, and spills etc. from the aluminum fluoride plant and neutralizes them with lime. The solids are removed in settling ponds before discharge. The waste water from scrubbers of both

hydrofluoric acid and aluminum fluoride plants is sent to an adjoining facility for use.

Plant #251 also combines the hydrofluoric acid and aluminum fluoride waste water. The suspended solids in the combined waste water are removed in the gypsum ponds. The overflow from the gypsum ponds is neutralized and the pH adjusted with the waste water from other products which are manufactured on the site. The plant is in the process of installing a new proprietary treatment process to further reduce the fluoride in its waste waters.

Two plants, #120 and #987, dispose of the kiln residue as a solid waste after lime addition. The waste water in both cases is treated with lime and the solids are separated; in one case in a clarifier followed by a filtration, and in the other by lagooning.

At Plant #167, the combined waste water (including the gypsum) is neutralized with lime and then settled in lagoons before discharge.

Plant #722 practices complete recycle. The gypsum slurry, scrubber water, and other waste waters are combined and treated with soda ash for neutralization. The neutralized solution is settled in lagoons and then is recycled to the scrubbers and to the kiln to slurry the gypsum.

Plant #426 disposes of the gypsum solids from the kiln as a solid waste after lime addition. The scrubber water is used to make another product. The noncontact cooling water is neutralized when required with caustic soda and settled before discharge.

12.4.5 Advanced Treatment Technologies

Although alkaline precipitation, sulfide precipitation, the xanthate process, and ion exchange might be applied to clarified solutions for control of metal ions, only alkaline precipitation can be readily used for slurried kiln wastes from HF production. Sulfide precipitation from cleared solutions could be used to provide additional removal of zinc, lead, nickel, and copper and to a lesser extent, antimony.

12.5 SELECTION OF APPROPRIATE TECHNOLOGY AND EQUIPMENT

12.5.1 Technologies for Different Treatment Levels

Level 1 (BPT)

Neutralization with lime, used widely in the HF industry, is shown as the BPT treatment, principally to control pH and the nonconventional pollutant fluoride - which is precipitated as calcium fluoride. Sufficient settled effluent may be reused to transport kiln waste to the treatment facility as a slurry, and the remainder is adjusted to a pH between 6 and 9 before discharge. The flow diagram is shown in Figure 12-5.

Level 2 (BAT)

Treatment is alkaline precipitation, using additional lime and close control of pH in second-stage neutralization, followed by lagoon settling. Sufficient lagoon effluent is reused to transport kiln waste to the treatment facility as a slurry and the remainder is filtered to remove finely divided metal hydroxides. The flow diagram is shown in Figure 12-6.

Level 3

It is assumed that 65 percent of the Level 2 effluent is reused for transporting spent kiln waste to the treatment facility. For the remaining 35 percent, pH adjustment and sulfide precipitation are used ahead of the Level 2 dual media filter, to react with residual lead, copper, nickel, zinc, and antimony which may not have reached their optimum pH levels for alkaline precipitation. The flow diagram for this treatment is shown in Figure 12-7.

Level 4

As an alternative to Level 2, Level 4 employs soda ash instead of lime for neutralization, depending on the spent ore to contain enough calcium to precipitate calcium fluoride. Use of soda ash permits increased effluent recycling without scaling problems associated with calcium sulfate. To control salinity and sodium alkalinity, a final effluent blowdown of at least 10 percent of the influent rate is maintained. The common heavy metals will be precipitated as carbonates and hydroxides with varying degrees of effectiveness at pH levels attainable with soda ash. The effluent is filtered and adjusted to a pH between 6 and 9 before discharge or process recycling. (Figure 12-8.)

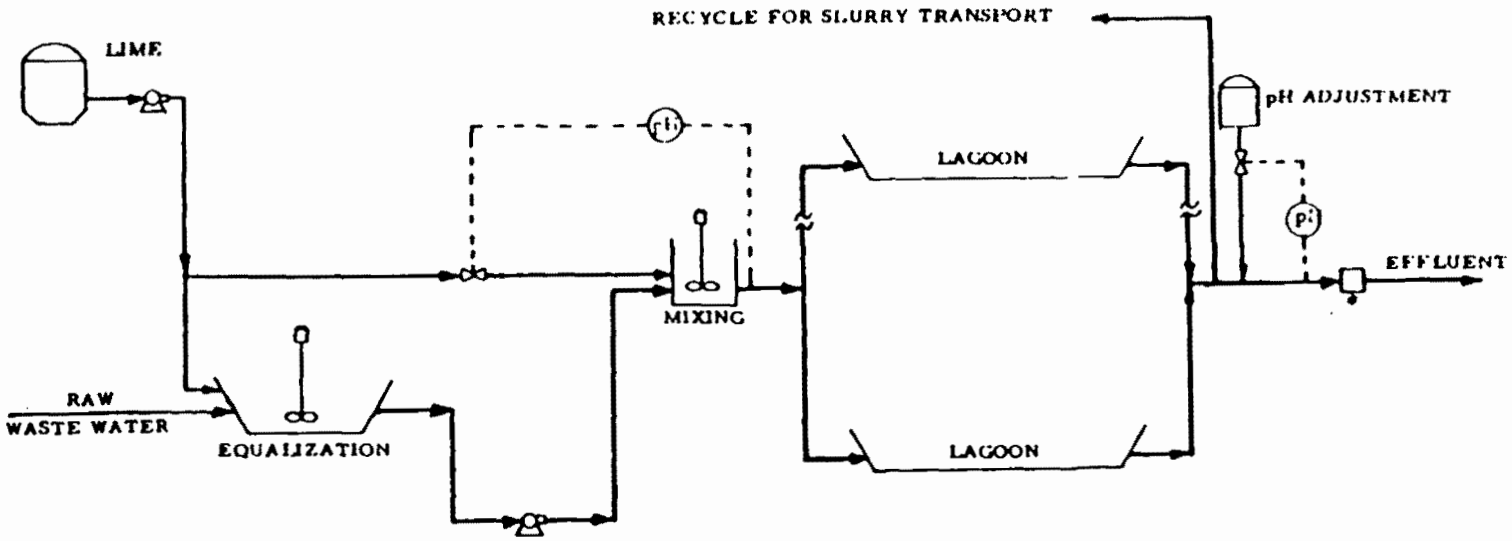

*Includes flow monitoring, pH monitoring and sampler

Figure 12-5. Level 1 waste water treatment for hydrofluoric acid subcategory.

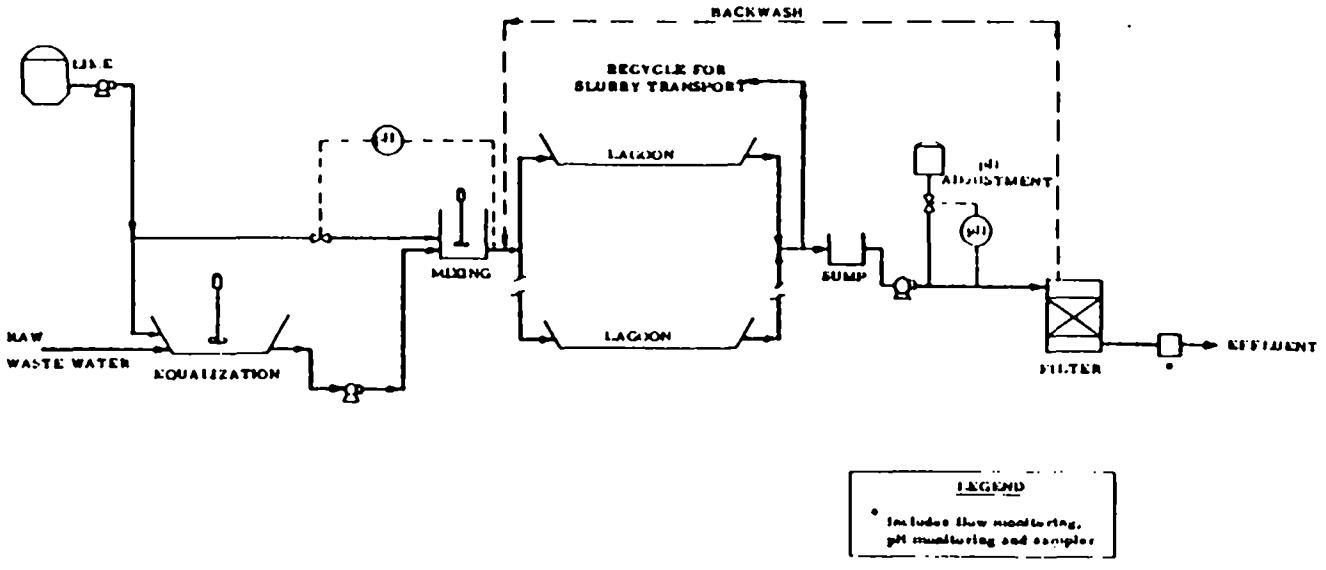

Figure 12-6. Level 2 waste water treatment for hydrofluoric acid subcategory.

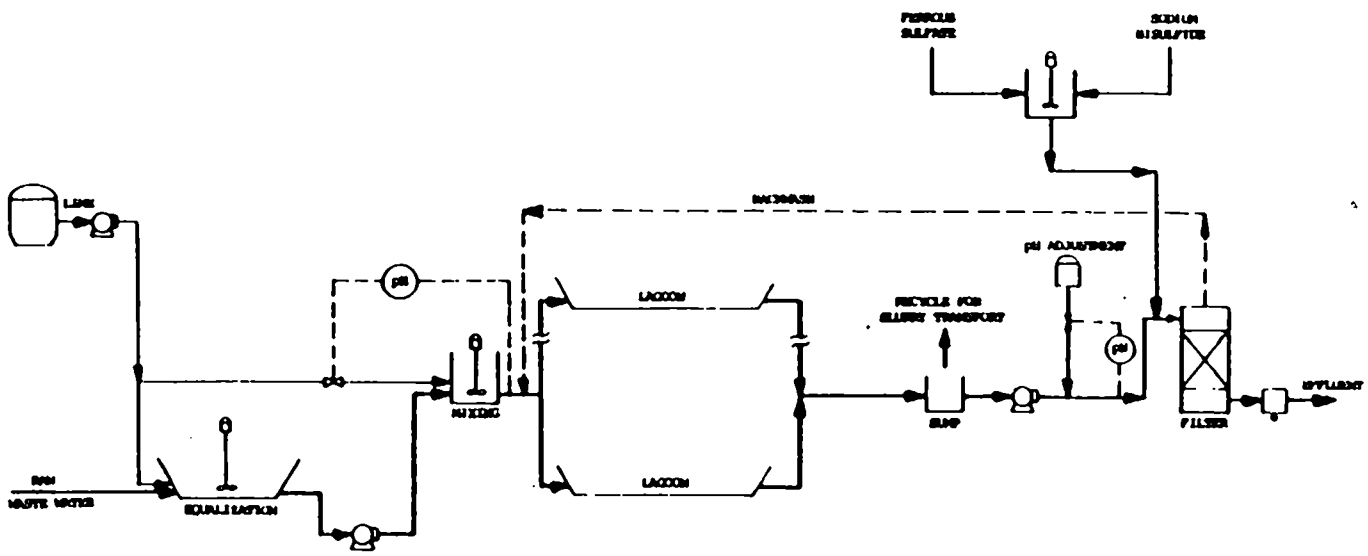

*Includes flow monitoring, pH monitoring and sampler

Figure 12-7. Level 3 waste water treatment for hydrofluoric acid subcategory.

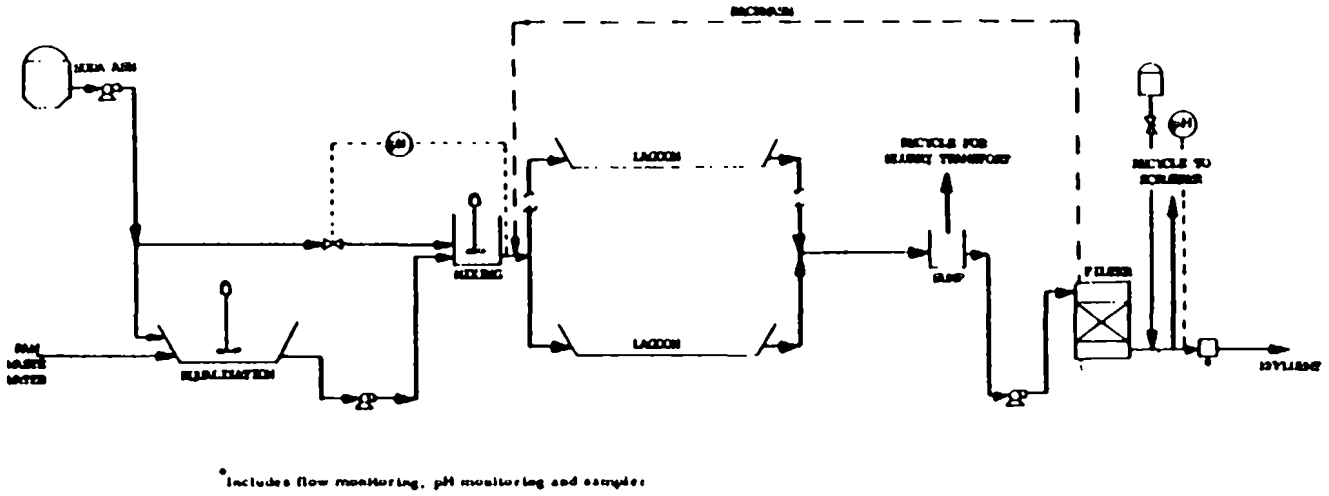

Figure 12-8. Level 4 waste water treatment for hydrofluoric acid subcategory.

Level 5 (NSPS)

The proposed NSPS treatment is dry handling and off-site chemical landfill for the kiln waste and two-stage alkaline precipitation with clarification and filtration for the liquid process wastes. Heavy metal precipitation with soda ash permits partial recycling for uses other than slurry transport. (Figure 12-9.)

12.5.2 Equipment for Different Treatment Levels

Equipment Functions

Level 1, typical of existing treatment facilities, utilizes very little equipment, but depends on lime neutralization in settling lagoons, with final pH adjustment.

In Level 2, conventional dual media filtration is added to the Level 1 system. In Level 3, standard reagent mixing and solution feeding units are added to the Level 2 system. In Level 4, which is an alternate to Level 2, the same type of chemical feed equipment is used for soda ash as was used for lime in Level 2. Conventional lagoons and dual media filters are used in Level 4, but special attention to selection of materials is required because of the high salinity of recycled effluent. In the NSPS model, dry kiln waste disposal is recommended with conventional dry solids handling equipment. Lagoons, clarifiers, and filters are used for scrubber, noncontact cooling, and other miscellaneous liquid wastes. In this case, equipment for storing and handling the dry kiln waste is not considered to be waste water treatment, and the cost is not included in the cost estimates.

Chemical Handling

Lime (as CaO) is the major chemical used in Levels 1 and 2, along with minor amounts of hydrochloric acid for final pH adjustment. With normal precautions, these chemicals pose no special hazards. In Level 3, ferrous sulfide is prepared on-site by mixing sodium bisulfide and ferrous sulfate. Although sodium bisulfide can release toxic H_2S at pH levels below 7, the hazard can be mitigated by avoiding acid conditions and by providing adequate ventilation. After mixing its components, the ferrous sulfide solution is stable at the pH levels employed in the process. In Level 4, only sodium carbonate and hydrochloric acid are used, without unusual safety hazards or special handling problems. In the NSPS system only lime, soda ash and hydrochloric acid are used, introducing no special problems of safety or handling.

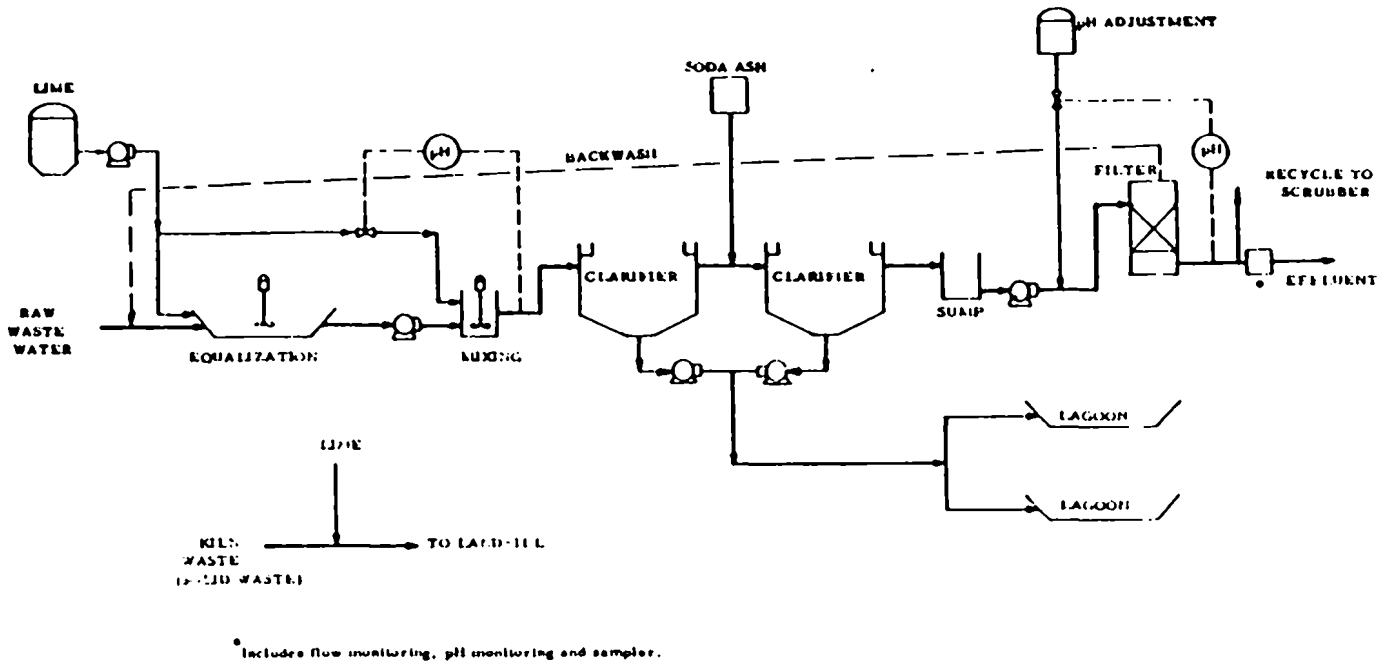

*Includes flow monitoring, pH monitoring and sampler.

Figure 12-9. Waste water treatment new source performance standard for hydrofluoric acid subcategory.

Separation and Removal of Solids

Solids are accumulated in unlined settling lagoons. In Level 4, calcium fluoride will still precipitate in the lagoons but the total sludge quantities will be less than in Levels 1, 2, and 3 where lime is used. Solids from Level 4 treatment will be alkaline, very saline, and difficult to consolidate. Dry solids from the Level 5 (NSPS) model are not subjected to treatment, except for nominal application of lime before hauling in dry form to an approved chemical landfill.

12.6 TREATMENT COST ESTIMATES

12.6.1 General Discussion

To prepare treatment cost estimates, a model plant concept was developed. The proposed BPT model treatment consists of:

A. Slurry transportation of kiln solids to an equalization basin.

B. Application of lime to precipitate fluoride and toxic metals, followed by lagoon settling.

C. pH adjustment before final discharge.

D. Scrubber, cooling, and distillation wastes enter the equalization basin.

It is assumed that drip acid is recycled to the process reactor and does not appear directly in the waste stream.

For new or remodeled production facilities, the NSPS model treatment system is based on hauling dry kiln residue directly to a landfill. Miscellaneous liquid wastes in the NSPS model are subjected to two stage lime-soda ash neutralization/precipitation, followed by filtration and partial return of effluent for use in scrubbers.

Waste Water Flow

The data in Table 12-4 for plants sending the gypsum solids to the treatment facility indicate that the unit flow varies from approximately 31.0 m3/kkg of HF to 166 m3/kkg of HF. For the model plants, a constant unit flow of 95.4 m3/kkg of HF was assumed.

HF Production

In the HF subcategory, production ranges from a minimum of 7,300 kkg/year to a maximum of 62,000 kkg/year with a mean of 22,100 kkg/year and a median of 15,800 kkg/year. For waste water treatment cost estimates, three production levels were selected as model plants. These are 19,100 kkg/year, 38,200 kkg/year, and 57,300 kkg/year.

Waste Water Pollutant Load

The amount of kiln residue varies from 3.8 to 4.1 kg/kg of HF produced. The waste water going to treatment model plants is assumed to contain 3.8 kg of solid kiln residue per kg of HF. Fluoride emissions in waste water have been shown to vary as indicated below:

Source of Data	Fluoride, (kg/kkg)
Reference 3	20
Reference 3	37
Screening and Verification Phase Sampling (Tables 12-8 and 12-9)	3.8 to 58

For the model plants, the average fluoride loading from kiln wastes of 31 kg/kkg HF produced was used to establish treatment requirements and related costs.

The costs shown at each level of treatment correspond to the model plant BPT system (Level 1) and one or more alternative BAT systems (Level 2, 3, and 4) which may add to or modify the existing BPT system to meet more stringent priority pollutant removal requirements. The BAT system also provides a higher effluent water quality with respect to the conventional and nonconventional parameters.

At each level of treatment, the cost elements associated with the typical rates of effluent reuse have also been included. However, the hydraulic loading on the treatment system is unaffected by reuse, and, therefore the total costs (including reuse) are independent of the particular rate of reuse that may be practiced.

The estimated costs for three models having different production levels are given in Tables 12-12, 12-13, and 12-14. For these models, both the hydraulic and the pollution loads per unit of production are held constant over the entire range of production. Annual treatment cost as a

TABLE 12-12. MODEL PLANT TREATMENT COSTS

Subcategory HYDROFLUORIC ACID

Production	19,100 metric tons per year (1)	(21,057 tons per year) (1)
	54 metric tons per day	(60 tons per day)
Waste water flow	5220 cubic meters per day.	

	LEVEL OF TREATMENT*			
	FIRST	SECOND	THIRD	FOURTH
A. INVESTMENT COST				
Construction	$877,500	$24,500	$25,000	$24,500
Equipment in place, including piping, fittings, electrical work and controls.....	356,000	89,500	92,000	89,500
Reuse facilities.....	30,000			
Monitoring equipment..	9,000			
Engineering design and inspection.....	254,500	22,800	23,400	22,800
Incidentals, overhead, fees, contingencies...	254,500	22,800	23,400	22,800
Land.....	1,020,000			
TOTAL INVESTMENT COST	$2,801,500	$159,600	$163,800	$159,600
B. OPERATION AND MAINTENANCE COST				
Labor and supervision.	$56,000	$14,000	$14,000	$14,000
Energy.....	14,000	1,500	1,800	1,500
Chemicals.....	534,800		3,400	367,700
Maintenance.....	172,650	15,960	16,380	15,960
Reuse O & M.....	6,500			
Taxes and insurance...	84,045	4,788	4,914	4,788
Residual waste disposal	350,000			
Monitoring, analysis and reporting.....	15,000	7,500	7,500	7,500
TOTAL OPERATION AND MAINTENANCE COST	1,232,995	$43,748	$47,994	$411,448
C. AMORTIZATION OF INVESTMENT COST	$289,850	$25,966	$26,650	$25,966
TOTAL ANNUAL COST	$1,522,845**	$69,714	$74,644	$437,414

*First level represents the base cost of treatment system. Other levels represent the incremental cost above base cost.

**Including $11,100 for the reuse of treated effluent to slurry kiln residues, etc.

(1) Production year is 350 days.

TABLE 12-13. MODEL PLANT TREATMENT COSTS

Subcategory HYDROFLUORIC ACID

Production	38,200 metric tons per year (1)	(42,115 tons per year) (1)
	109 metric tons per day	(120 tons per day)
Waste water flow	10450 cubic meters per day.	

	LEVEL OF TREATMENT*			
	FIRST	SECOND	THIRD	FOURTH
A. INVESTMENT COST				
Construction	$1,354,500	$35,000	$35,500	$35,000
Equipment in place, including piping, fittings, electrical work and controls.....	493,500	131,000	137,500	131,000
Reuse facilities.....	40,000			
Monitoring equipment..	9,000			
Engineering design and inspection.....	379,400	33,200	34,600	33,200
Incidentals, overhead, fees, contingencies...	379,400	33,200	34,600	33,200
Land.....	1,944,000			
TOTAL INVESTMENT COST	$4,599,800	$232,400	$242,200	$232,400
B. OPERATION AND MAINTENANCE COST				
Labor and supervision.	$56,000	$14,000	$14,000	$14,000
Energy.....	19,500	3,100	3,400	3,100
Chemicals.....	1,069,600		6,700	735,350
Maintenance.....	257,580	23,240	24,220	23,240
Reuse O & M.....	10,000			
Taxes and insurance...	137,994	6,972	7,266	6,972
Residual waste disposal.	700,000			
Monitoring, analysis and reporting.....	15,000	7,500	7,500	7,500
TOTAL OPERATION AND MAINTENANCE COST	2,265,674	$54,812	$63,086	$790,162
C. AMORTIZATION OF INVESTMENT COST	$432,098	$37,811	$39,405	$37,811
TOTAL ANNUAL COST	$2,697,772**	$92,623	$102,491	$827,973

*First level represents the base cost of treatment system. Other levels represent the incremental cost above base cost.

**Includes $16,500 for the reuse of treated effluent to slurry kiln residues, etc.

(1) Production year is 352 days.

TABLE 12-14. MODEL PLANT TREATMENT COSTS

Subcategory HYDROFLUORIC ACID

Production	57,300 metric tons per year (1)	(63,173 tons per year) (1)
	163 metric tons per day	(180 tons per day)
Waste water flow	15700 cubic meters per day.	

	LEVEL OF TREATMENT*			
	FIRST	SECOND	THIRD	FOURTH
A. INVESTMENT COST				
Construction	$1,755,500	$49,000	$50,000	$49,000
Equipment in place, including piping, fittings, electrical work and controls.....	848,000	203,500	215,500	203,500
Reuse facilities.....	50,000			
Monitoring equipment..	9,000			
Engineering design and inspection.....	532,500	50,500	53,100	50,500
Incidentals, overhead, fees, contingencies...	532,500	50,500	53,100	50,500
Land.....	2,880,000			
TOTAL INVESTMENT COST	$6,607,500	$353,500	$371,700	$353,500
B. OPERATION AND MAINTENANCE COST				
Labor and supervision.	$56,000	$14,000	$14,000	$14,000
Energy.....	28,000	4,600	4,900	4,600
Chemicals.....	1,604,400		10,070	1,103,025
Maintenance.....	362,350	35,350	37,170	35,350
Reuse O & M.....	13,000			
Taxes and insurance...	198,225	10,605	11,151	10,605
Residual waste disposal.	1,050,000			
Monitoring, analysis and reporting.....	15,000	7,500	7,500	7,500
TOTAL OPERATION AND MAINTENANCE COST	3,326,975	$72,055	$84,791	$1,175,080
C. AMORTIZATION OF INVESTMENT COST	$606,464	$57,514	$60,475	$57,514
TOTAL ANNUAL COST	$3,933,439**	$129,569	$145,266	$1,232,594

*First level represents the base cost of treatment system. Other levels represent the incremental cost above base cost.

**Includes $21,200 for the reuse of treated effluent to slurry kiln residues, etc.

(1) Production year is 350 days.

function of production is shown graphically in Figure 12-10. Similarly, treatment cost per metric ton of product is given in Figure 12-11.

To indicate the effect on costs of an increased pollution load per unit of production for the 38,200 kkg/year model plant, the pollution load was increased by 100 percent and the hydraulic load was held constant. The cost estimate indicated that the annual unit cost per metric ton of product at first and fourth (incremental) levels of treatment increased approximately 40 percent and 90 percent respectively over the original model unit cost. The increased cost is due mainly to the additional cost of chemicals. Increase of pollutant loading had no effect on the unit cost of treatment at other levels of treatment.

Similarly, for the same model plant, the hydraulic load was increased by 100 percent and the pollutant load was held constant. The cost estimate indicated that the annual unit cost per metric ton of product at the second and fourth levels of treatment increased approximatley 70 percent and 10 percent respectively over the original model unit cost. There was no significant impact on the unit cost at other levels of treatment.

Table 12-15 presents a summary of the unit cost distribution between amortization and operation and maintenance cost components at various production rates and levels of treatment.

At the second, third and fourth levels of treatment, the cost estimates are based on part of the waste water flow being recirculated and the remaining flow being treated, thus the subsequent treatment units are sized and estimated for lower flows than if recycling were not practiced.

12.6.2 Model Plant Control Costs for Existing Sources

For the model plant control costs for existing sources at the first level of treatment, the disposal of the sludge is on-site and hence the land requirements are fairly large. Chemicals, sludge hauling, and disposal costs have a significant impact on the total annual costs. At the second and third levels of treatment however, amortization, labor and supervision costs constitute a major portion of the additional annual costs.

The fourth level of treatment is designed for recirculation of the major portion of the treated effluent and therefore, soda ash is used for neutralization in place of lime. Due to this change, chemical cost has a significant impact on the additional annual costs.

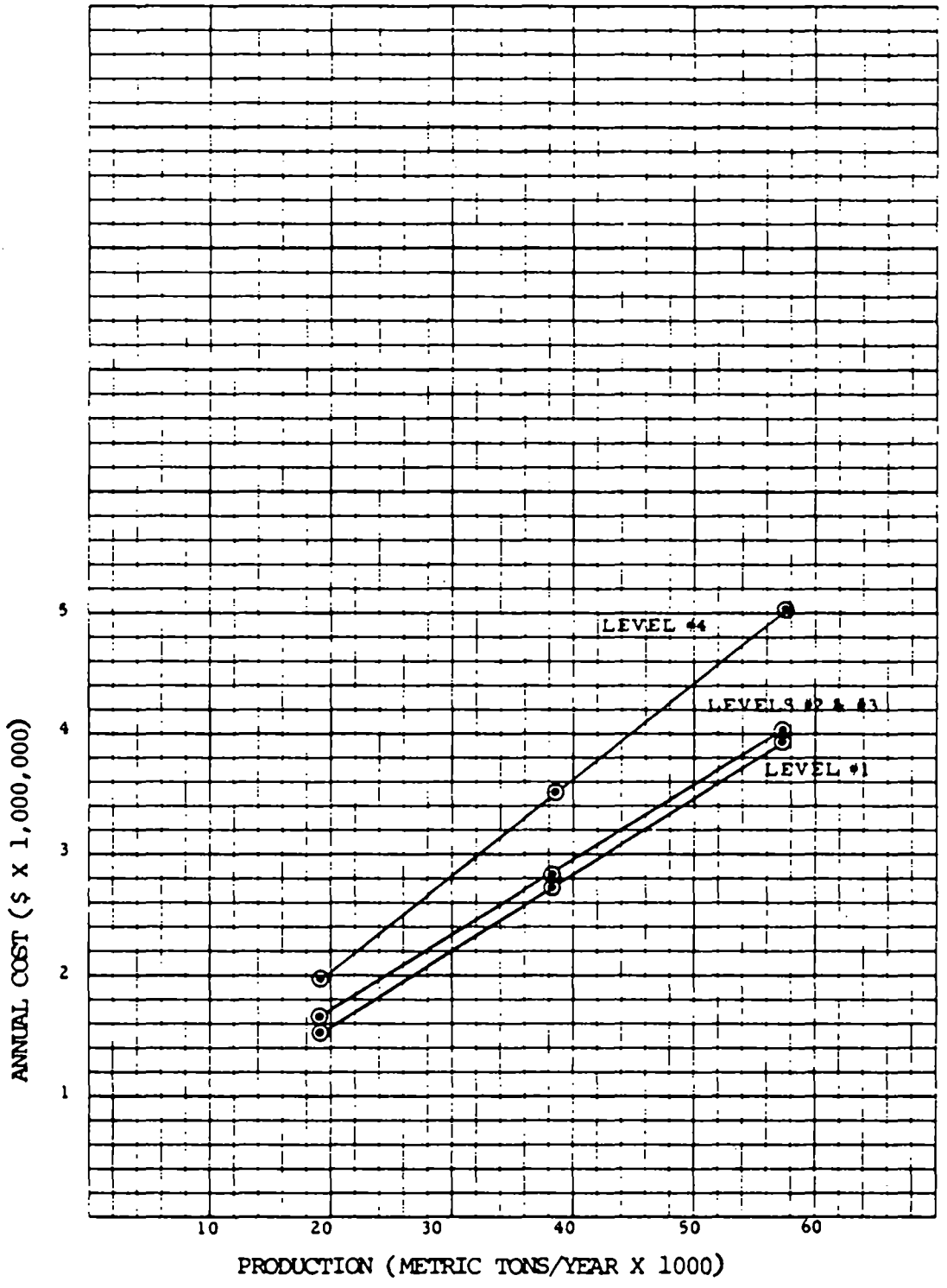

Figure 12-10. Annual treatment cost vs. production for the Hydrofluoric Acid Subcategory

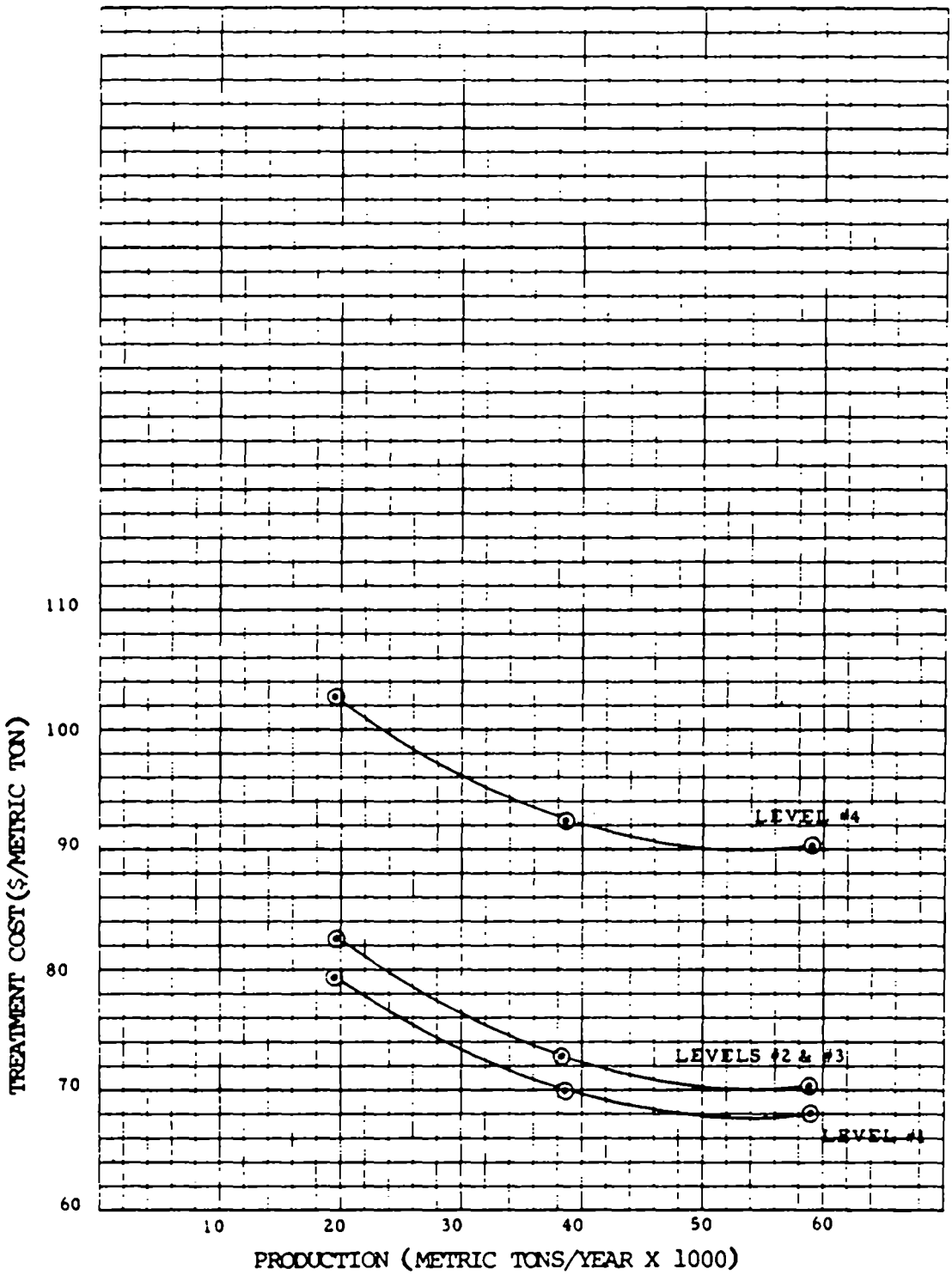

Figure 12-11. Annual unit treatment cost vs. production for the Hydrofluoric Acid Subcategory

TABLE 12-15. MODEL PLANT TREATMENT COSTS

Subcategory HYDROFLUORIC ACID

COST ITEMS	PRODUCTION (kkg/yr)	FLOW (m3/day)	Annual Treatment Costs ($/kkg) of HF — LEVEL OF TREATMENT: FIRST	SECOND	THIRD	FOURTH
Annual Operation and Maintenance	19,100	5,220	64.55	2.29	2.51	21.54
	38,200	10,450	59.31	1.43	1.65	20.68
	57,300	15,700	58.06	1.26	1.48	20.51
Annual Amortization	19,100	5,220	15.18	1.36	1.40	1.36
	38,200	10,450	11.31	0.99	1.03	0.99
	57,300	15,700	10.58	1.00	1.06	1.00
Total Cost	19,100	5,220	79.73	3.65	3.91	22.90
	38,200	10,450	70.62	2.42	2.68	21.67
	57,300	15,700	68.65	2.26	2.54	21.51

12.6.3 Model Plant Control Costs for New Sources

The basis of the selection of the model plant representing a new source is described earlier in this section. The estimated costs for three different models, having three different production levels are given in Tables 12-16, 12-17, and 12-18. Both the hydraulic and pollutant loads are directly proportional to the production, i.e., the waste flow per unit of production and the pollutant loading per unit of production are held constant.

Annual treatment cost as a function of production is shown graphically in Figure 12-12. Treatment cost per metric ton of product is given in Figure 12-13.

Table 12-19 presents a summary of the unit cost distribution between amortization and operation and maintenance components.

For the model plant, the dry solids generated in the kiln are hauled to approved chemical dump sites, eliminating kiln waste slurry. The waste water sources are air pollution control (scrubbers), leak, spills, and washdowns.

The cost of transporting dry kiln waste sludge to the approved chemical dump site has been included in the cost estimates. The cost of conveying the dry solids from the kiln operation to the trucks (for transporting to the dump site) is not included in the cost estimate. Such costs, which can vary widely with site conditions, are considered to be process costs and not part of treatment. However, if such costs are to be considered as part of the treatment costs, then the estimated total annual costs per metric ton of product for the three model plants would be as follows:

Production (kkg/year)	Flow (m3/day)	Total Annual Cost ($/kkg)
19,100	680	14.81
38,200	1,370	9.68
57,300	2,030	8.03

Since the sludge disposal is not on site, the land cost has negligible impact on total annual cost. However, the cost of transporting the dry solids to the dump site constitutes about 75 percent of the annual costs.

TABLE 12-16. MODEL PLANT TREATMENT COSTS

Subcategory HYDROFLUORIC ACID

Production	19,100 metric tons per year (1)	(21,057 tons per year) (1)
	54 metric tons per day	(60 tons per day)
Waste water flow	680 cubic meters per day.	

	LEVEL OF TREATMENT*
	FIRST
A. INVESTMENT COST	
Construction	$64,000
Equipment in place, including piping, fittings, electrical work and controls.....	327,000
Monitoring equipment in place.....	9,000
Engineering design and inspection.....	80,000
Incidentals, overhead, fees, contingencies...	80,000
Land.....	30,000
TOTAL INVESTMENT COST	$590,000
B. OPERATION AND MAINTENANCE COST	
Labor and supervision.	$56,000
Energy.....	6,100
Chemicals.....	44,000
Maintenance.....	56,000
Taxes and insurance...	17,700
Residual waste disposal.....	742,000
Monitoring, analysis and reporting.....	15,000
TOTAL OPERATION AND MAINTENANCE COST	$936,800
C. AMORTIZATION OF INVESTMENT COST	$91,112
TOTAL ANNUAL COST	$1,027,912

*First level represents the base cost of treatment system.
Other levels represent the incremental cost above base cost.

(1) Production year is 350 days.

TABLE 12-17. MODEL PLANT TREATMENT COSTS

Subcategory HYDROFLUORIC ACID

Production	38,200 metric tons per year (1)	(42,115 tons per year) (1)
	109 metric tons per day	(120 tons per day)
Waste water flow	1370 cubic meters per day.	

	LEVEL OF TREATMENT*
	FIRST
A. INVESTMENT COST	
Construction	$94,500
Equipment in place, including piping, fittings, electrical work and controls.....	468,500
Monitoring equipment in place.....	9,000
Engineering design and inspection.....	114,400
Incidentals, overhead, fees, contingencies...	114,400
Land.....	60,000
TOTAL INVESTMENT COST	$860,800
B. OPERATION AND MAINTENANCE COST	
Labor and supervision.	$56,000
Energy.....	8,300
Chemicals.....	88,000
Maintenance.....	80,080
Taxes and insurance...	25,824
Residual waste disposal.....	1,480,000
Monitoring, analysis and reporting.....	15,000
TOTAL OPERATION AND MAINTENANCE COST	$1,753,204
C. AMORTIZATION OF INVESTMENT COST	$130,290
TOTAL ANNUAL COST	$1,883,494

*First level represents the base cost of treatment system.
Other levels represent the incremental cost above base cost.
(1) Production year is 350 days.

TABLE 12-18. MODEL PLANT TREATMENT COSTS

Subcategory HYDROFLUORIC ACID

Production	57,300 metric tons per year (1)	(63,173 tons per year) (1)
	163 metric tons per day	(180 tons per day)
Waste water flow	2030 cubic meters per day.	

	LEVEL OF TREATMENT*
	FIRST
A. INVESTMENT COST	
Construction	$120,700
Equipment in place, including piping, fittings, electrical work and controls.....	601,000
Monitoring equipment in place.....	9,000
Engineering design and inspection.....	146,140
Incidentals, overhead, fees, contingencies...	146,140
Land.....	84,000
TOTAL INVESTMENT COST	$1,106,980
B. OPERATION AND MAINTENANCE COST	
Labor and supervision.	$56,000
Energy.....	12,250
Chemicals.....	132,000
Maintenance.....	102,298
Taxes and insurance...	33,209
Residual waste disposal.....	2,226,000
Monitoring, analysis and reporting.....	15,000
TOTAL OPERATION AND MAINTENANCE COST	$2,576,757
C. AMORTIZATION OF INVESTMENT COST	$166,438
TOTAL ANNUAL COST	$2,743,195

*First level represents the base cost of treatment system.
Other levels represent the incremental cost above base cost.
(1) Production year is 350 days.

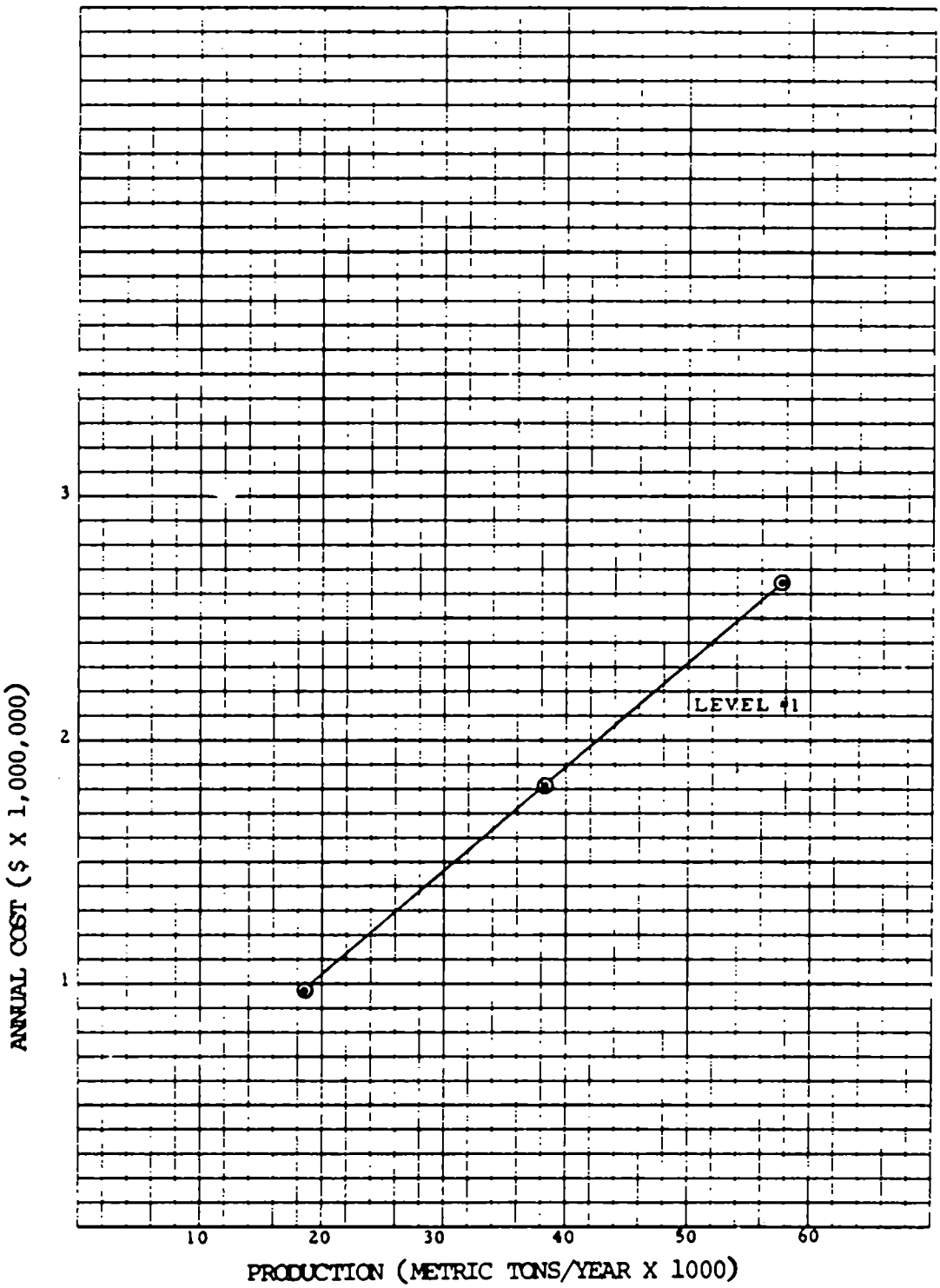

Figure 12-12. Annual treatment cost vs. production for the Hydrofluoric Acid Subcategory (NSPS)

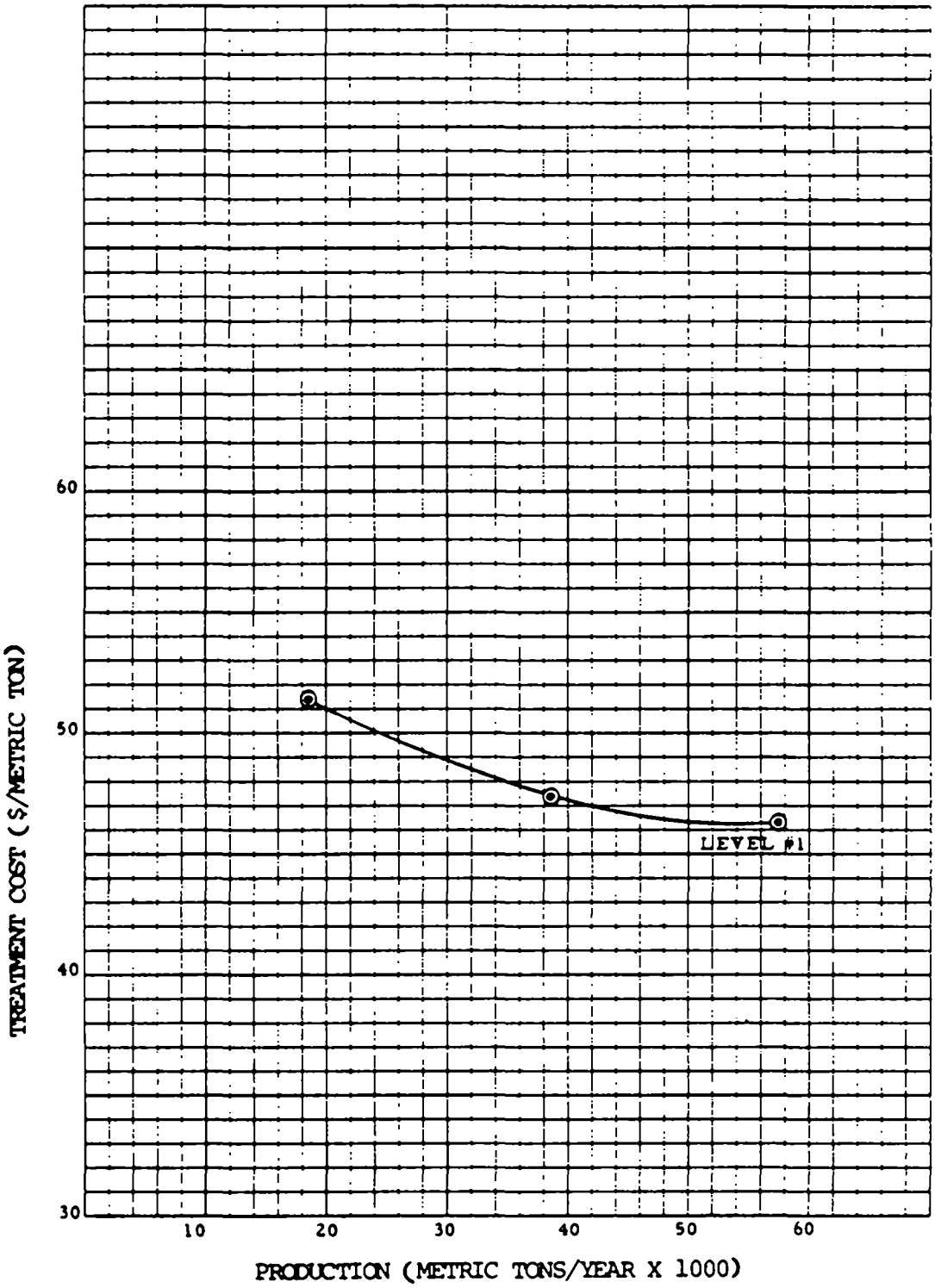

Figure 12-13. Annual unit treatment cost vs. production for the Hydrofluoric Acid Subcategory (NSPS)

TABLE 12-19. MODEL PLANT TREATMENT COSTS

Subcategory HYDROFLUORIC ACID

COST ITEM	PRODUCTION (kkg/yr)	FLOW (m3/day)	Annual Treatment Costs ($/kkg) of HF — LEVEL OF TREATMENT* FIRST	SECOND	THIRD	FOURTH
Annual Operation and Maintenance	19,100	680	49.05	Not Applicable		
	38,200	1,370	45.90			
	57,300	2,030	44.97			
Annual Amortization	19,100	680	4.77			
	38,200	1,370	3.41			
	57,300	2,030	2.90			
Total Cost	19,100	680	53.82			
	38,200	1,370	49.31			
	57,300	2,030	47.87			

* Only applies to first level.

12.7 BASIS FOR REGULATIONS

12.7.1 Evaluation of BPT Treatment Practices

Control and treatment practices for eleven plants producing HF are presented in Table 12-20. Also indicated are other product-related waste water sources and pollutant loads discharged.

It is clear from the table that a wide variation in effluent quality exists within this subcategory. The factors believed to cause these variations are the following:

Dry Residue Handling

The disposal of kiln waste by dry handling rather than slurrying is practiced currently at three plants. This process eliminates the major source of waste water generated at most plants, greatly reducing the raw waste loads to be treated. The only sources of waste water remaining are from air pollution control and washdown.

Effluent Reuse

Reuse of treated waste water for slurry transport of kiln wastes is commonly practiced to varying degrees and clearly has a major effect on pollutant loads discharged. Although four plants do not practice reuse, it has been demonstrated sufficiently that this practice is both technologically and economically feasible.

Recycle of Condensables

Recycling of drip acid or condensable cooler bottoms reduces the loading of fluoride in the treated effluent since the fluoride species (fluorosulfonic acid) in this material is not removed by conventional lime treatment. Only two plants do not recycle drip acid.

Other Related Products

Most hydrofluoric acid plants also discharge wastes from related products such as aluminum fluoride, fluorocarbons, hexafluorosilicic and tetrafluoroboric acids to treatment. These other product wastes can account for higher raw waste loadings and increase the potential for complex fluorides formation and can also impact treatment efficiency by diluting the raw waste. In addition, commingling of other product wastes will limit the percentage of reuse of the total plant treated effluent.

TABLE 12-20. SUMMARY OF WASTE WATER CONTROL AND TREATMENT TECHNOLOGY EMPLOYED AT HYDROFLUORIC ACID PLANTS[1]

Plant	Product-Related Waste Water Sources	Control and Treatment Technology Employed	Amount of Treated Waste Water Reused	Cooler Bottoms (Condensables) Recycled?	Effluent Volume in m^3/metric ton (gal/short ton) of Actual Production	Long Term Average Pollutant Wasteload Discharged (kg/metric ton) (lb/1000 lb) Fluoride	TSS
# 426	Hydrofluoric acid fluosilicic acids production	Dry residue hauling and dumping; neutralization with caustic of noncontact cooling water and floor drainage	0	Yes	465 (111,397) includes noncontact cooling water	1.2	ND
# 664	Hydrofluoric acid production	Residue slurry, neutralization with sodium carbonate, settling, recycle	94%	Yes	5.78 (1,360)	0.10	0.27
# 167	Hydrofluoric acid, fluorocarbon, Chlorine/sodium hydroxide, and hydrochloric acid production	Residue slurry, lime treatment, settling, recycle	47%	Yes	103 (24,200)	18	0.45 (Net)[3]
# 120	Hydrofluoric acid production	Planned dry residue handling, lime treatment, clarification	0	Yes	ND	ND	ND
# 967	Hydrofluoric acid, fluorocarbon, and sulfuric acid production	Residue slurry, settling (Recycle and pH polishing facilities under construction.)	Present: 0 Planned: 70% to 75%	Yes	125 (30,000)	Present: 24 Expected with additional facilities 1.8	16 2.1
# 928	Hydrofluoric acid and aluminum fluoride production	Residue slurry, settling, recycle (Flocculation, lime treatment, and clarification facilities under construction.)	83%	Yes	9.44 (2,260)	Present: 1 Expected with additional facilities 0.65	1.7 0.75
# 837	All hydrofluoric acid generated as used captively for aluminum fluoride production	Residue slurry, lime treatment, settling	0	Yes	134 (32,200)	1.8	3.1
# 753	Hydrofluoric acid production	Residue slurry, lime treatment, settling, recycle, pH polishing	65%	Yes	11.0 (2,650)	0.64	0.38
# 251[2]	HF, AlF_3, chlorine/sodium hydroxide, aluminum oxide, and fluorocarbon production	Residue slurry, settling, neutralization	0	1 Kiln: Yes 3 Kilns: No	22.2×10^3 (553×10^3)	46	530
# 705[2]	Hydrofluoric acid and aluminum fluoride production	Residue slurry, lime treatment, settling, recycle, pH polishing	30% to 35%	No	25.9 (6,204)	3.2	0.64
# 722	Hydrofluoric and, in recent past, fluoboric, acid production	Residue slurry, lime treatment, settling, recycle, pH polishing	92% to 100%	Yes	0-10.3 (0-2,460)	0-0.81	0 to 0.54
# 987[2]	Hydrofluoric Acid	Dry residue hauling	0	Yes	8.8	ND	ND

(1) Adapted from Calspan (Reference 3).
(2) Hydrofluoric Acid production has been discontinued at these plants since the time of sampling.
(3) Effluent loading less the influent loading.
ND = Not determined.

In addition to the above factors, the design and operation of the treatment facilities affect effluent quality. Solids removal depends on retention time and surge capacity. Precipitation of fluoride requires careful pH control and in areas of heavy rainfall or winds, adequate freeboard or multiple ponds are necessary to limit the discharge of high pollutant loads due to unfavorable climatic conditions.

Pollutant Removal with BPT Treatment

Treatment level 1 is equivalent to the proposed BPT in the Hydrofluoric Acid industry. Table 12-21 presents a summary of long term effluent monitoring data on total suspended solids (TSS) and fluoride from four plants. Means, standard deviations, and variability factors are given where sufficient data are available. These performance characteristics are later utilized for the development of the proposed regulations on TSS and fluoride.

The ability of BPT treatment to remove toxic pollutants can be estimated by comparing the raw waste data presented in Table 12-10 with the corresponding treated effluent data presented in Table 12-22. The latter expresses the removal efficiency as the calculated average percent removal observed at these plants. The BPT removal efficiency for some of the toxic metals is undoubtedly augmented to some degree by the fact that the raw waste may carry insoluble forms of the metals that were never completely leached out of the ore. Removal of these forms would take place simply by settling out; however, the effluent concentrations of some metals such as chromium, nickel, and zinc remain at concentrations higher than should be achievable by alkaline precipitation. This suggests that these metals are largely in solution coming into the treatment system and that the optimum conditions for metal hydroxide formation were not being attained at the time of sampling.

The original BPCTCA limitations for this subcategory shown in Table 12-2 required zero pollutant discharge except during periods of excess rainfall. Objections to the zero-discharge limitations concerned the feasibility of using gypsum-saturated water for reuse in the air pollution control scrubbers.

The proposed BPT waste water control and treatment technology allows for the discharge of process waste water after appropriate treatment. This technology is practiced widely in the industry and should pose no technical problems. Implementation of BPT at all sites in the industry will achieve the indicated pollutant discharge levels.

The nine plants presently producing hydrofluoric acid all have installed BPT treatment or the equivalent. At the time of

TABLE 12-21. SUMMARY OF LONG TERM MONITORING DATA FROM FOUR HYDROFLUORIC ACID PLANTS[1]

Plant No.	Parameter	Treated Waste Load (kg/kkg) or (lb/1000lb)						
		Daily Data				30-Day Average Data		
		Long Term Average ($\bar{X}$)	St.Dev. (S)	St.Dev. (S')	VF[2]	Long Term Average ($\bar{X}$)	St.Dev. (S)	VF[2]
#664	Fluoride	0.10	0.090	0.77	4.5	0.10	0.040	1.7
	TSS	0.29	—	--	--	0.27	—	—
#753	Fluoride	0.72	0.27	0.36	2.2	0.64	0.15	1.4
	TSS	0.38	—	--	--	--	--	--
#722	Fluoride	0.81	0.52	0.59	3.3	--	—	--
	TSS	0.54	0.37	0.62	3.5	—	—	—
#705[3]	Fluoride	--	--	—	--	0.49	0.22	1.7
	TSS	—	—	—	--	0.84	0.37	1.7

(1) Based on Reference 3 data.

(2) In the case of daily measurements, the variability factor, VF, for a lognormal distribution is found by the expression $\ln(VF) = S'(Z - 0.5S')$, where S' is the estimated standard deviation of the logarithm derived from the arithmetic mean, X, and the arithmetic standard deviation, S, according to the relationship, $(S')^2 = \ln\left[1.0 + \left(\frac{S}{\bar{X}}\right)^2\right]$. When the value of Z is 2.33, the variability factor for the 99 percentile is obtained. For 30-day average measurements, a normal distribution is obtained and the variability factor is found by the expression, $VF = 1.0 + Z\left(\frac{S}{\bar{X}}\right)$. When the value of Z is 1.64, the variability factor is for the 95 percentile. Please refer to Section 8.2 for a more detailed discussion of the statistical analysis of long term data.

(3) Although Plant #705 does not recycle the drip acid, the TSS data is not adversely affected and is used as the basis for the 30-day average VF.

— Not Available.

TABLE 12-22. TOXIC POLLUTANT TREATED EFFLUENT DATA

SUBCATEGORY: HYDROFLUORIC ACID

Average Daily Pollutant Concentrations and Loadings at Plants Sampled (1)

(mg/l)
(kg/kkg of Anhydrous HF)

	#705 (S)	#705 (V)	#251 (V)	#167 (V)	Overall Average (2)	Average % Removal
Antimony	<0.010 <0.00021	<0.0020 <0.000042	<0.17 <0.017	0.047 0.012	<0.057 <0.0073	74
Arsenic	<0.0030 <0.000063	<0.010 <0.00021	<0.020 <0.0020	0.016 0.0040	<0.012 <0.0016	81
Cadmium	0.00030 0.0000060	<0.0017 <0.000035	<0.0020 <0.00020	0.0087 0.0022	<0.0032 <0.00060	9 9
Chromium	0.014 0.00029	<0.046 <0.00096	0.22 0.022	0.050 0.013	<0.083 <0.0091	62
Copper	0.10 0.0021	<0.020 <0.00042	0.070 0.0069	0.060 0.015	<0.063 <0.0061	77
Lead	0.0060 0.00012	<0.022 <0.00046	<0.031 <0.0031	0.010 0.0026	<0.017 <0.0015	97
Mercury	<0.00040 <0.0000080	<0.00050 <0.000010	<0.0010 <0.00010	0.0065 0.0017	<0.0020 <0.00044	67
Nickel	0.050 0.0010	<0.010 <0.00021	0.52 0.052	0.090 0.023	<0.17 <0.019	54
Selenium	0.033 0.00069	<0.0050 <0.00010	<0.071 <0.0070	0.010 0.0026	<0.030 <0.0026	Effluent >Influent
Thallium	0.0070 0.00015	<0.0012 <0.000025	<0.0070 <0.00069	0.0030 0.00069	<0.0045 <0.00039	85
Zinc	0.071 0.0015	0.053 0.0011	0.16 0.015	1.9 0.49	0.55 0.13	83

(S) Screening data from one 72-hour composite sample of treated effluent.

(V) Verification data from three 24-hour composite samples.

(1) The effluent data presented here corresponds to the raw waste data shown in Table 12-10. The methodology of the sampling program is described in Section 5.1.2, and the scope of sampling in the Hydrofluoric Acid industry is described in Section 12.3.3.

(2) When averaging values indicated as "less than" (<), the absolute value was used and the resulting average was indicated as a "less than" value.

sampling, seven of the 12 plants operating were meeting the proposed fluoride limitations and eight were meeting the proposed TSS limitations according to the data available. Although there is practically no long term monitoring data available to support the additional proposed limitations on toxic metals, the screening and verification data indicate that all three plants sampled are meeting the proposed limitations on antimony, copper, and lead, while two of the plants are meeting the proposed zinc limitation and one plant is meeting the proposed chromium and nickel limitations. With the limited amount of toxic metal data, it is not possible to estimate compliance or noncompliance on a statistical basis. The Agency is conducting additional treatability studies.

12.7.2 Basis for Proposed BPT Effluent Limitations

Technology Basis

For BPT, the Agency is proposing limitations for which the technology basis is, or is equivalent to, equalization, lime neutralization/alkaline precipitation, solids removal by settling or thickening, final pH adjustment, and discharge of clarified effluent. The in-house process recycling of the reactor condensables (drip acid) is required for meeting the proposed fluoride limitations.

Flow Basis

The reuse of treated waste water to slurry kiln residues to the treatment system is not required for meeting the BPT limitations. BPT or its equivalent is practiced by all plants in this industry including six which reuse, for slurrying residues, proportions of their treated waste water ranging from 30 to 100 percent of the plant flow as shown in Tables 12-4 and 12-20.

The practice of reusing waste water in this manner has two opposing effects on the plant effluent:

A. A decrease in the net discharge unit flow rate (m3/kkg), and
B. An increase in the fluoride concentrations (mg/l).

As a result, the fluoride unit loading (kg/kkg) in the effluent does not decrease as a direct proportion to the decrease in the flow rate, but is partially offset due to the increase in fluoride concentration as a function of percent reuse. The relationship of percent water reuse to fluoride concentrations and unit loadings is shown in Figure 12-14. The apparent reason for the increase in fluoride concentration with reuse is a calcium deficiency which may result from the

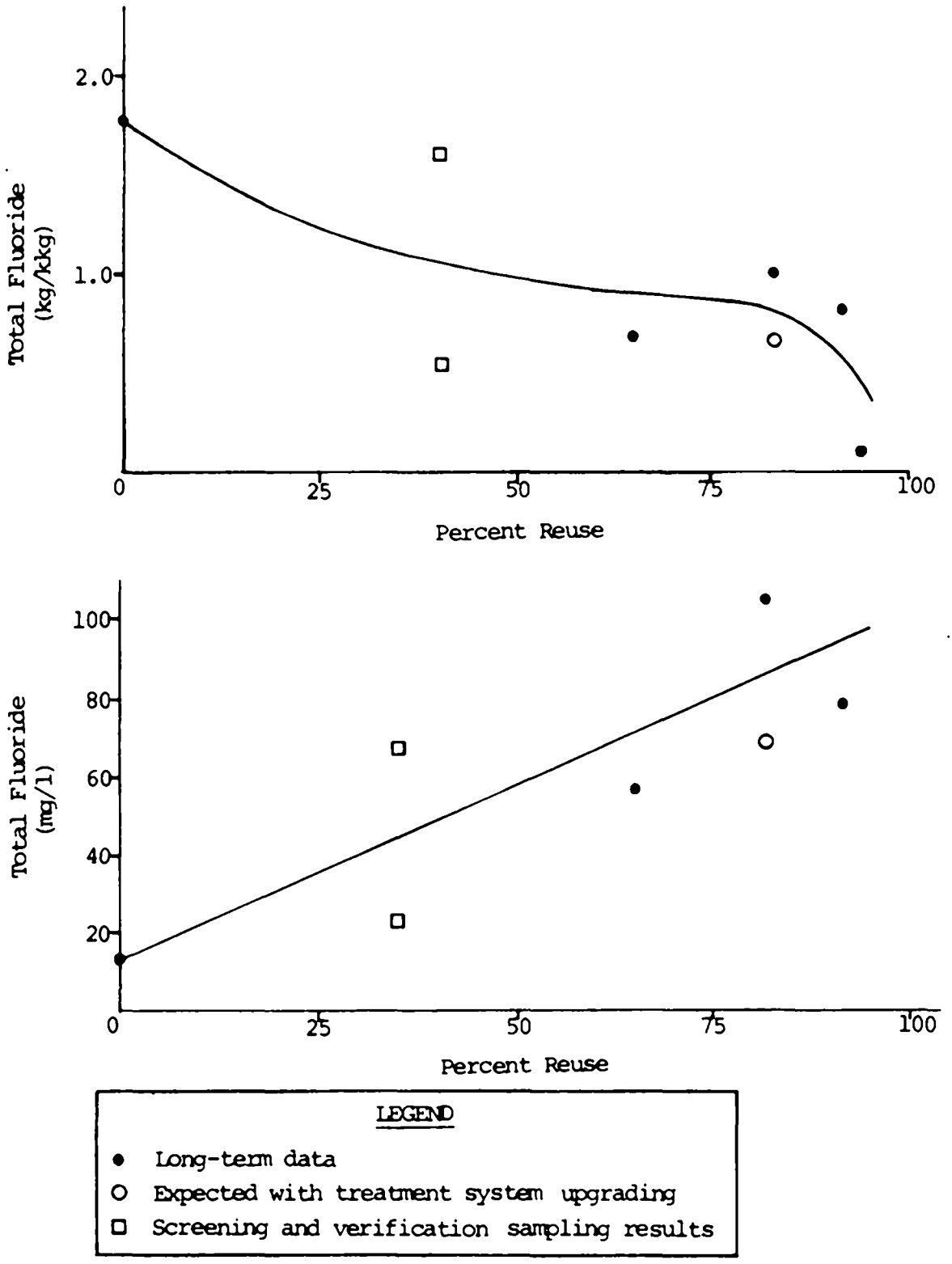

Figure 12-14. Fluoride loads and concentrations discharged at selected hydrofluoric acid plants.

buildup of sulfate or bicarbonate concentrations in the treatment systems at plants where reuse is practiced. Other pollutants such as TSS and metals would not be expected to exhibit similar concentration offset effects in these systems.

It should be noted that while the practice of reusing waste water for kiln residue slurrying may be advantageous in some locations with respect to alternative water supply costs, there is no associated reduction in the hydraulic load, size, or cost of the BPT treatment system itself.

The net result of water reuse is a moderate decrease in the effluent fluoride loadings which is achieved at a small additional annual cost of less than one percent of the estimated BPT treatment systems cost (Tables 12-12, 12-13, and 12-14).

The model plant BPT treatment system is based on an inflow rate of 95.4 m3/kkg derived from the average of nine plants which handle the kiln residues in a slurry system as shown in Table 12-4. The treated effluent flow rate is 54.6 m3/kkg which is the average effluent flow rate for the same nine plants and corresponds to the reuse of about 43 percent of the flow for residue slurrying and other uses.

Selection of Pollutants to be Regulated

The selection of pollutants for which specific numerical effluent limitations are proposed was based on an evaluation of raw waste data from the screening and verification sampling program. The following two major factors were considered:

Raw waste pollutant concentrations - A tabular summary of maximum raw waste concentrations is presented in Section 12.3.3. Data from the one plant sampled for screening were used to determine the need for verification sampling. The maximum concentrations found during verification are also shown for comparison. For each pollutant, the maximum concentration observed gave a preliminary indication of its potential significance in the subcategory. On this basis, the preliminary selection of candidates for regulation included zinc, lead, antimony, nickel, chromium, and copper in decreasing order of their apparent pollution potential. These pollutants were observed at least once during the sampling program at concentrations considered treatable in this industry using one of the available treatment technology options. The other metals, cadmium, thallium, and mercury exhibited maximum concentrations that were considerably lower.

Total subcategory raw waste pollutant loadings -Pollutant raw waste loading data were used to evaluate the overall magnitude of the pollution potential for the subcategory. Data from the plants sampled are presented in Table 12-10 and the

daily and unit loadings are summarized in Table 12-11. This information, coupled with the estimated total hydrofluoric acid production rate of 261,800 kkg/year, yielded the approximate total annual pollutant loading rates for the subcategory shown in Section 12.3.3. This method of ranking the pollution potential of the observed toxic metals confirmed the maximum concentration based ranking and indicated that zinc, nickel, lead, antimony, copper, and chromium were the six dominant toxic metals in terms of both total mass loadings and treatable raw waste concentrations.

In view of the treatment technology already implemented in this industry, the added BPT regulation of any one of these pollutants may provide assurance that all of the observed toxic metals would receive adequate treatment and control. This includes taking credit for incidental removal of metals which are either below practical treatability limits or are not particularly amenable to removal by alkaline precipitation methods. The latter includes cadmium, selenium, thallium, and mercury. Thus, because zinc, nickel, lead, antimony, copper, and chromium were observed most frequently at treatable concentrations and may serve as reliable indicators of overall treatment system performance, these metals were selected as the additional parameters proposed for BPT regulations.

Basis of Pollutant Limitations

Conventional and nonconventional parameters -

A. pH: The treated effluent is to be controlled within the range of 6.0 to 9.0. This limitation is based on the data presented in Appendix B of this report and the JRB Study (52).

B. TSS and Fluoride: The data presented in Tables 12-20 and 12-21 were used for the development of TSS and fluoride limitations. However, because of the wide range of product mixes, significant differences in residue handling, waste water treatment, reuse practices, and dilution with other product waste streams, it was necessary to select only those plants where the effect of BPT technology could be clearly observed. The plants excluded are:

#426 and #120 because kiln residues are handled as a dry solid,

#167, #967, and #251 because the combined treatment of HF wastes along with the waste waters from other major products generated high fluoride loadings in the large volume discharges with fluoride at its minimum treatability concentration,

#705 because cooler bottom condensables (drip acids) are not recycled back to the process but are added to the raw waste contributing complex fluorides which tend to remain in solution after lime treatment. TSS data are not affected.

Data from the remaining five plants are presented in Table 12-23 which summarizes the development of the proposed regulations for total suspended solids and fluoride. Since the BPT level of treatment does not require the reuse of treated waste water for slurrying kiln residues, the performance of Plant #837 was used as the long term average unit loading basis for the TSS and fluoride limitations. The variability factors used for fluoride are based on the long term data from Plants #664 and #753 and those used for TSS are derived from Plant #722 for daily measurements and Plant #705 for 30-day average measurements as indicated in Table 12-23.

The proposed maximum 30-day average TSS limitation was obtained by multiplying the variability factor for 30-day averages from Table 12-23 by the long term average waste load; i.e., 1.7 x 3.1 kg/kkg = 5.3 kg/kkg. Similarly, the daily maximum TSS limitation was obtained by multiplying the variability factor for daily measurements by the long term average; i.e., 3.5 x 3.1 kg/kkg = 11 kg/kkg. The same approach was taken to obtain the proposed fluoride limitations; i.e., 1.6 x 1.8 kg/kkg = 2.9 kg/kkg for the maximum 30-day average, and 3.4 x 1.8 kg/kkg = 6.1 kg/kkg for the daily maximum limitation. These computations are shown on Table 12-23 and the proposed BPT limitations are presented in Table 12-24.

The concentration basis (C) for each effluent is derived from the relationship between concentration (C), flow (Q), and unit loading,

$$C \text{ (as mg/l)} = 1000 \frac{(L)}{(Q)}$$

Where L is the effluent limitation expressed as a unit loading in kg of pollutant per kkg of product (kg/kkg), and Q is the flow rate expressed as cubic meters per kkg of product (m3/kkg). (Note: kg/m3 = 1000 mg/l.)

Thus, the concentration basis for the maximum 30-day average TSS limitation is:

$$\frac{(5.3 \text{ kg/kkg})}{(54.6 \text{ m3/kkg})} \left(\frac{1000 \text{ mg/l}}{\text{kg/m3}}\right) = 97 \text{ mg/l}$$

and the concentration basis for the daily maximum limitation is obtained by a similar calculation or simply by applying the

TABLE 12-23. DEVELOPMENT OF TSS AND FLUORIDE LIMITATIONS

Plant	Reuse (percent)	Long Term Average Waste Load Discharged: Fluoride (kg/kkg of HF)	Long Term Average Waste Load Discharged: TSS (kg/kkg of HF)
#837	0	1.8	3.1
#753	65	0.72	0.38
#928	83	1.0	1.7
#722	92	0.81	0.54
#664	94	0.10	0.29
Average of four plants practicing effluent reuse (excluding #837)		0.66	0.73
Variability Factor for Daily Measurements		3.4 (1)	3.5 (5)
Variability Factor for 30-Day Averages		1.6 (1)	1.7 (6)
Variability Factor Ratio (VFR)		3.4/1.6 = 2.1 (2)	3.5/1.7 = 2.1 (2)
Effluent Limitations for BPT (from Plant #837)			
a. Daily Max		3.4 X 1.8 kg/kkg = 6.1 (3)	3.5 X 3.1 kg/kkg = 11 (3)
b. Max 30-Day Avg		1.6 X 1.8 kg/kkg = 2.9 (4)	1.7 X 3.1 kg/kkg = 5.3 (4)
Effluent Limitations for BAT (from average of four plants)			
a. Daily Max		3.4 X 0.64 kg/kkg = 2.2 (3)	NA
b. Max 30-Day Avg		1.6 X 0.64 kg/kkg = 1.0 (4)	NA

NA - Not Applicable

(1) Variability factor average of Plants #664, #722 and #753 from Table 12-21.

(2) Ratio of the daily (24-hr) variability factor to the 30-day average variability factor. This value appears on the Proposed Limitations tables.

(3) The long term average loading in kg/kkg multiplied by the variability factor for daily measurements as shown.

(4) The long term average loading in kg/kkg multiplied by the variability factor for 30-day measurements as shown.

(5) Variability factor from Plant #722, Table 12-21.

(6) Variability factor from Plant #705, Table 12-21.

TABLE 12-24. PROPOSED LIMITATIONS
Hydrofluoric Acid
Best Practicable Control Technology Currently Available
Waste Water Flow: 54.6 m3/kkg of HF (43% Reuse) *

Pollutant	Subcategory Performance (mg/l)	Concentration Basis (1) VFR	(mg/l) Max 30-day Avg	(mg/l) 24-hr Max	Effluent Limit (kg/kkg) of HF Max 30-day Avg	Effluent Limit (kg/kkg) of HF 24-hr Max
Conventional and Nonconventional Pollutants:						
Total Suspended Solids	57 (2)	2.1	97	200	5.3	11
Fluoride	33 (2)	2.1	53	110	2.9	6.1
Toxic Pollutants:						
Antimony	0.80 (3)	2.0	0.80	1.6	0.044	0.088
Arsenic	0.50 (3)	2.0	0.50	1.0	— (5)	— (5)
Chromium	0.10 (3)	2.0	0.10	0.20	0.0055	0.011
Copper	0.50 (3)	2.0	0.50	1.0	0.027	0.054
Lead	0.30 (3)	2.0	0.30	0.60	0.016	0.033
Nickel	0.17 (4)	2.0	0.17	0.34	0.0093	0.019
Selenium	0.20 (3)	2.0	0.20	0.40	— (5)	— (5)
Zinc	0.55 (4)	2.0	0.55	1.1	0.030	0.060

(1) - VFR: ratio of the 24 hour variability factor to the 30 day variability factor.

(2) - Long term average based on loading data and variability factors selected from Table 12-21.

(3) - The lower limit of the literature treatability estimate (Table 8-11) is used as the basis for the 30-day average limitation when the observed average of the sampling data is below this level.

(4) - Average effluent concentration from screening and verification sampling data.

(5) - No effluent limitation proposed.

* From Table 12-4.

variability factor ratio, VFR, from Table 12-24 to the maximum 30-day average concentration; that is,

(VFR) (max. 30-day average concentration or loading)

= daily maximum concentration or loading In this case, the daily maximum TSS concentration is 2.1 X 97 mg/l = 201 mg/l.

In the same manner, the concentration basis for the maximum 30-day average fluoride limitation is,

$$\frac{(2.9\ kg/kkg)}{(54.6\ m3/kkg)} \left(\frac{1000\ mg/l}{kg/m3}\right) = 53\ mg/l$$

and the daily maximum fluoride concentration is 2.1 X 53 mg/l = 111 mg/l. (Note: due to rounding off, this value differs just slightly from the value that appears in Table 12-24 which was obtained by calculating the concentration directly from the daily maximum limitation; i.e.,

$$\frac{(6.1\ kg/kkg)}{(54.6\ m3/kkg)} \left(\frac{1000\ mg/l}{kg/m3}\right) = 112\ mg/l.$$

In either case, only two significant figures should be taken.)

Performance evaluation and review of discharge quality has been complicated by problems associated with chemical analysis. Prior to July 1976, the methods generally used for the analysis of fluoride in industry were specific ion electrode or colorimetry. These methods did not detect the soluble complex fluoride species present in the waste water. The best method of total fluoride detection (free as well as complex) is distillation followed by analysis using the specific ion electrode. Using the distillation method, the complex fluorides are hydrolyzed and the resulting HF is carried over with the distillate along with any free HF in the sample. Thus, the method of total fluoride analysis used for effluent monitoring is capable of measuring free fluoride and the fluoride present in the form of complex ions which are not removed by lime treatment. Monitoring data on effluent fluoride levels using the revised method are likely to be higher than the levels previously reported under the same treatment conditions.

Toxic pollutants - The effluent limitations proposed for the selected toxic pollutant control parameters are derived from three sources of information. These are 1) screening and verification sampling data, 2) literature based treatability estimates (Section 8.1), and 3) a limited amount of long term monitoring data from Plant #251.

The sampling results represent plant performance observed during three days of sampling at each of the plants. The treated effluent data on the toxic pollutants found at significant levels are summarized in Table 12-22. The average values shown for each pollutant are interpreted as being approximately equal to a maximum 30-day average unless there is some reason to believe that abnormal conditions existed either in the process operation or in the treatment system at the time of sampling. Abnormal conditions would dictate that high values should either be excluded or regarded as daily maxima rather than monthly averages. For this subcategory, the screening and verification data are believed to represent normal influent and effluent values at the plants sampled.

For a number of the metal pollutants, the sampling data demonstrate that the effluent quality and percent removal with full scale BPT systems are considerably better than the literature treatability data in Section 8.1 would indicate for that particular technology. For example, even though arsenic, cadmium, mercury, and thallium average influent concentrations are well below the accepted treatability limits for lime/settling shown in Table 8-11, greater than 60 percent removals were observed for all but cadmium as is shown in Table 12-22. This high degree of incidental removal supports the contention that by applying effluent limitations just to the dominant metal pollutant(s), an effective control of the other metals may also be assured.

In Table 12-24, the concentration bases for the proposed BPT limitations are derived from the averaged effluent sampling data unless the observed pollutant concentration is actually below the literature treatability level. In such cases, the lowest applicable treatability level from Table 8-11 is used. This approach results in the setting of achievable effluent limitations for all of the pollutants of concern and provides for the possibility of wider variations in the influent quality. Such variations may be associated with different fluorspar impurity levels or other process variables not fully taken into account by the limited data obtained.

The basis for the proposed BPT limitations on each of the selected metals is given below.

A. Zinc: The raw waste concentrations of zinc ranged as high as 11.3 mg/l (Section 12.3.3, Table of Maximum Concentrations Observed) and averaged about 3.2 mg/l (Table 12-10) for the plants sampled. BPT treatment achieved an average removal of better than 80 percent with an average performance concentration of about 0.55 mg/l in the treated effluent shown in Table 12-22. This level of performance

approximately equals that obtained from the literature treatability data in Table 8-11. The average performance value is used as the concentration basis for the proposed maximum 30-day average effluent limitation of 0.030 kg/kkg using the model plant flow of 54.6 m3/kkg (Table 12-4). This limitation was achieved by all but one of the plants sampled. Using the model plant flow of 54.6 m3/kkg from Table 12-14, the limitation was calculated as follows:

$$(0.55 \text{ mg/l})(54.6 \text{ m3/kkg}) \left(\frac{\text{kg/m3}}{1000 \text{ mg/l}}\right) = 0.030 \text{ kg/kkg}$$

Since long term monitoring data on zinc are not available from the HF industry, the variability factor ratio (VFR) of 2.0 was selected on the basis of lead monitoring data from Plant #251 presented in Tables A-10a and A-10c. This is justified by the similarity in the chemistry of lead, zinc, and the other metals of concern under BPT treatment conditions. Thus,

$$\text{VFR} = \frac{\text{VF of daily measurements}}{\text{VF of 30-day averages}} = \frac{3.12}{1.55}$$

$$= 2.0$$

and the daily maximum limitation for zinc is,

$$(2.0)\ (0.030 \text{ kg/kkg}) = 0.060 \text{ kg/kkg}.$$

The proposed effluent limitations on zinc and the other metals of concern are given in Table 12-24.

B. Nickel: The sampling data indicate better than 60 percent BPT removal of nickel resulting in an average effluent quality of about 0.17 mg/l. The literature treatability data in Table 8-11 show an effluent level approximately equal to this value. Thus, 0.17 mg/l is used as the concentration basis for the proposed maximum 30-day average effluent limitation of 0.0093 kg/kkg. A VFR of 2.0 was used following the same rationale described for zinc. Thus, the proposed maximum 30-day average limitation is,

$$(0.17 \text{ mg/l})(54.6 \text{ m3/kkg}) \left(\frac{\text{kg/m3}}{1000 \text{ mg/l}}\right) = 0.0093 \text{ kg/kkg},$$

and the daily maximum limitation is,

$$(2.0)\ (0.0093 \text{ kg/kkg}) = 0.019 \text{ kg/kkg}.$$

C. Lead: Because the observed average raw waste concentration of lead (0.66 mg/l) was very close to the 0.30

mg/l lower limit of its estimated treatability according to literature data, the latter was selected as the concentration basis for the proposed maximum 30-day average effluent limitation rather than using the observed performance average of less than 0.02 mg/l. This results in setting the limitation at 0.016 kg/kkg, a level which would be achievable with BPT treatment even when higher influent levels occur. It also avoids taking credit for incidental removal and a higher removal efficiency than can be justified by the use of this technology. A VFR of 2.0 was used for lead on the basis of long term data from Plant #251. The proposed maximum 30-day average limitation is,

$$(0.30\ \text{mg/l})(54.6\ \text{m3/kkg})\left(\frac{\text{kg/m3}}{1000\ \text{mg/l}}\right) = 0.016\ \text{kg/kkg},$$

and the daily maximum limitation is,

$$(2.0)(0.016\ \text{kg/kkg}) = 0.032\ \text{kg/kkg}.$$

D. Antimony: In a manner similar to that described for establishing the lead regulation, the concentration basis for the proposed maximum 30-day average effluent limitation on antimony was set at 0.80 mg/l in accordance with literature treatability data. The resulting limitation of 0.044 kg/kkg was met in two of the four sampling data sets. A VFR of 2.0 was also used for antimony although a wider range of variation may be observed when more operating data are collected. The proposed maximum 30-day average limitation is,

$$(0.80\ \text{mg/l})(54.6\ \text{m3/kkg})\left(\frac{\text{kg/m3}}{1000\ \text{mg/l}}\right) = 0.044\ \text{kg/kkg},$$

and the daily maximum is,

$$(2.0)(0.044\ \text{kg/kkg}) = 0.088\ \text{kg/kkg}.$$

E. Copper: The concentration basis for the proposed maximum 30-day average effluent limitation on copper was set at 0.50 mg/l in accordance with the literature treatability data. All of the plants sampled had average loadings below the proposed 0.027 kg/kkg limitation. A VFR of 2.0 was used following the same rationale described for zinc. Thus, for copper, the proposed maximum 30-day average limitation is,

$$(0.50\ \text{mg/l})(54.6\ \text{m3/kkg})\left(\frac{\text{kg/m3}}{1000\ \text{mg/l}}\right) = 0.027\ \text{kg/kkg},$$

and the daily maximum is,

$$(2.0)(0.027\ \text{kg/kkg}) = 0.054\ \text{kg/kkg}.$$

F. Chromium: The concentration basis for the proposed maximum 30-day average limitation on chromium was set at 0.10 mg/l in accordance with the literature treatability data. Two of the plants sampled exceeded the proposed limitation of 0.0055 kg/kkg. A VFR of 2.0 was used following the same rationale described for zinc. The proposed maximum 30-day average BPT effluent limitation is,

$$(0.10 \text{ mg/l})(54.6 \text{ m3/kkg}) \left(\frac{\text{kg/m3}}{1000 \text{ mg/l}}\right) = 0.0055 \text{ kg/kkg}$$

and, the daily maximum is,

$$(2.0)(0.0055 \text{ kg/kkg}) = 0.011 \text{ kg/kkg}.$$

G. Other metals: The concentration bases for arsenic and selenium are also presented in Table 12-24. These are intended to serve as guidance in cases where these pollutants are found to be of serious concern.

12.7.3 Basis for Proposed BCT Effluent Limitations

For the Hydrofluoric Acid Subcategory, the Agency is proposing BCT limitations applicable to total suspended solids (TSS) based on the estimated performance of Level 2 (BAT) treatment. Assuming that the addition of dual media filtration to the BPT system removes approximately 30 percent more suspended solids, the maximum 30-day average TSS loading of 5.3 kg/kkg (Table 12-24) would be decreased to 3.7 kg/kkg as follows:

$$(1.00 - 0.30)(5.3 \text{ kg/kkg}) = 3.7 \text{ kg/kkg}$$

By adjusting the loading to account for the decrease in effluent flow rate from BPT (54.6 m3/kkg) to BAT (33.4 m3/kkg), the proposed BCT maximum 30-day average effluent limitation becomes,

$$(3.7 \text{ kg/kkg}) \left(\frac{33.4 \text{ m3/kkg}}{54.6 \text{ m3/kkg}}\right)$$

$$= 2.3 \text{ kg/kkg}$$

The corresponding daily maximum limitation is then obtained by applying the VFR value of 2.1 (Table 12-24). That is,

$$(2.1)(2.3 \text{ kg/kkg}) = 4.8 \text{ kg/kkg}$$

12.7.4 Basis for Proposed BAT Effluent Limitations

The Application of Advanced Level Treatment

Utilizing the cost estimates presented in this report, the Agency has analyzed the cost effectiveness of the base level systems (BPT) and the various advanced level options for conventional, nonconventional and toxic pollutant removal. The economic impacts on the Hydrofluoric Acid industry have been evaluated in detail (53) and taken into consideration in the selection of the technology basis for the proposed BAT regulations.

For BAT, the Agency is proposing limitations based on treatment consisting of Level 2 technology. It has been estimated that this will remove 11,100 pounds per year of toxic metals and 104,000 pounds per year of fluorides in addition to the pollutant removals already being achieved by BPT treatment.

The Agency considered the use of treatment Level 3 (addition of sulfide precipitation) but rejected it due to lack of performance data. EPA also considered Level 4, a variation of Level 2, that would substitute soda ash in the lime precipitation step and allow 90 percent recycle of effluent. This option was rejected due to being prohibitively expensive. Pollutants limited by the proposed BAT are fluoride, antimony, chromium, copper, lead, nickel, and zinc.

Technology Basis

For BAT, the Agency is proposing more stringent effluent limitations on fluoride and the toxic metals based on the addition of dual media filtration or its equivalent to the BPT treatment system, coupled with the requirement of at least 65 percent effluent reuse for kiln residue slurrying. This technology aims at both the reduction of suspended solids containing fluorides and metal precipitates and the reduction of the dissolved component loadings of these substances in the final effluent. The minimum reuse rate of 65 percent was selected because it is typical of the five plants (Plants #167, #753, #928, #664, and #722) which presently practice reuse as is shown in Table 12-4.

Flow Basis

With the model plant inflow rate of 95.4 m3/kkg and the reuse of 65 percent of the treated effluent, the quantity discharged is 33.4 m3/kkg; i.e., (1.00 -0.65)(95.4 m3/kkg) = 33.4 m3/kkg.

Selection of Pollutants to be Regulated

For the BAT regulations, the Agency has selected fluoride and the same six toxic metals identified in the proposed BPT regulations. The rationale for their selection is discussed in Section 12.7.2.

Basis of Pollutant Limitations

Nonconventional pollutants - The only nonconventional pollutant is fluoride. The limitation proposed for BAT is based on the performance of the four plants shown in Table 12-23 that presently reuse at least 65 percent of their treated effluent. The long term average effluent loading taken from Table 12-23 is 0.66 kg/kkg for the four plants and this is equal to the performance of Plant #753 which reuses 65 percent, the lowest reuse rate of the four plants. Although these plants do not employ the filtration technology which is the basis for the BAT regulation, the use of this performance in conjunction with the 30-day average variability factor of 1.6 and the model plant net discharge rate of 33.4 m3/kkg results in a calculated maximum 30-day average concentration of 30 mg/l total fluoride. Thus, the maximum 30-day average limitation is,

$$(1.6)(0.66 \text{ kg/kkg}) = 1.1 \text{ kg/kkg}$$

and its concentration basis is,

$$\frac{(1.1 \text{ kg/kkg})}{(33.4 \text{ m3/kkg})} \left(\frac{1000 \text{ mg/l}}{\text{kg/m3}}\right) = 33 \text{ mg/l}$$

This represents a 58 percent reduction in fluoride concentration in going from BPT (43 percent reuse) to BAT (65 percent reuse plus filtration). The use of a fixed loading limitation allows the permissible concentration to increase as a function of percent reuse. The proposed daily maximum limitation on fluoride is obtained by utilizing the long term average and variability factor for daily measurements,

$$(3.4)(0.66 \text{ kg/kkg}) = 2.2 \text{ kg/kkg}$$

and the concentration basis is,

$$\frac{(2.2 \text{ kg/kkg})}{(33.4 \text{ m3/kkg})} \left(\frac{1000 \text{ mg/l}}{\text{kg/m3}}\right) = 66 \text{ mg/l}$$

The variability factors used for the BAT limitations on fluoride are the same as for BPT shown in Table 12-23. The proposed BAT limitations for the Hydrofluoric Acid Subcategory are presented in Table 12-25.

TABLE 12-25. PROPOSED LIMITATIONS
Hydrofluoric Acid
Best Available Technology
Waste Water Flow: 33.4 m3/kkg of HF (65% Reuse)*

Pollutant	Treatability (mg/l)	Concentration Basis (1) VFR	Concentration Basis (mg/l) 30-day Avg	Concentration Basis (mg/l) 24-hr Max	Effluent Limit (kg/kkg of HF) 30-day Avg	Effluent Limit (kg/kkg of HF) 24-hr Max
Nonconventional Pollutants:						
Fluoride, F (2)	33 (3)	2.1	33	66	1.1	2.2
Toxic Pollutants:						
Antimony (2)	0.70	2.0	0.70	1.4	0.023	0.047
Arsenic	0.50	2.0	0.50	1.0	-- (4)	-- (4)
Chromium (2)	0.040	2.0	0.040	0.080	0.0013	0.0027
Copper (2)	0.29	2.0	0.29	0.58	0.0097	0.019
Lead (2)	0.060	2.0	0.060	0.12	0.0020	0.0040
Nickel (2)	0.15	2.0	0.15	0.30	0.0050	0.010
Selenium	0.18	2.0	0.18	0.36	-- (4)	-- (4)
Zinc (2)	0.52	2.0	0.52	1.0	0.017	0.035

(1) - VFR: ratio of the 24 hour variability factor to the 30 day variability factor.

(2) - Also applicable for PSES limitations.

(3) - 30-Day average calculated for the model plant based on data in Table 12-21.

(4) - No effluent limitation proposed.

* The effluent flow rate is 35 percent of the average influent shown in Table 12-4 (i.e., 0.35 X 95.4 m3/kkg = 33.4 m3/kkg).

The estimated performance of Level 3 and Level 4 alternative technologies are presented in Tables 12-26 and 12-27, respectively. For these options, the expected performance is expressed in the achievable maximum 30-day average and daily (24-hour) maximum concentrations. These are presented for comparison purposes and are not the bases for any proposed regulations.

The Agency is currently conducting treatability studies on dual media filter performance with HF industry wastes. The results will be available prior to promulgation.

Toxic pollutants - For BAT regulations, the EPA is proposing more stringent controls on the discharge of the six toxic metals of concern on the basis of a reduced volume of dicharge and physical removal by filtration. Alkaline precipitation converts most of the dissolved metals into less toxic, insoluble forms such as hydroxides and hydrated oxides. Other mechanisms of removal including coprecipitation and flocculation are undoubtedly involved during the treatment process and probably account for a substantial portion of the removal of certain toxic metals. Because there is no directly applicable data on filter performance in the HF industry, literature treatability studies (40, 41) have been evaluated in order to estimate the probable efficiency of filtration for the removal of residual suspended metal precipitates. The following information was derived from pilot scale tests on raw municipal waste water samples spiked with toxic metals, treated with lime, and settled, followed by dual media filtration of the clarified effluent:

Removal of Suspended Metal Precipitates by Filtration

	(Percent)
Antimony	7
Arsenic	0
Chromium (III)	60
Copper	42
Lead	80
Nickel	14
Selenium	12
Zinc	6

The filter efficiency values have been used in setting the proposed BAT limitations. The basis for the limitation on each metal is given below.

A. Zinc: Filtration of the BPT effluent is estimated to reduce the zinc concentration by 6 percent to approximately 0.52 mg/l. This value is used as the concentration basis for the maximum 30-day average effluent limitation. Application

TABLE 12-26. PERFORMANCE OF ALTERNATIVE TECHNOLOGY
Hydrofluoric Acid
Level of Treatment: 3
Waste Water Flow: 33.4 m3/kkg of HF (65% Reuse)

Pollutant	Treatability (mg/l)	VFR[1]	Achievable Concentration (mg/l)	
			Max 30-day Avg	24-hr Max
Nonconventional Pollutants:				
Fluoride, F	33	2.1	33	66
Toxic Pollutants:				
Antimony	0.70	2.0	0.70	1.4
Arsenic	0.50	2.0	0.50	0.10
Chromium	0.010	2.0	0.010	0.020
Copper	0.050	2.0	0.050	0.10
Lead	0.060	2.0	0.060	0.12
Nickel	0.10	2.0	0.10	0.20
Selenium	0.18	2.0	0.18	0.36
Zinc	0.20	2.0	0.20	0.20

(1) - VFR: ratio of the 24-hour variability factor to the 30-day variability factor.

TABLE 12-27. PERFORMANCE OF ALTERNATIVE TECHNOLOGY
Hydrofluoric Acid
Level of Treatment: 4
Waste Water Flow: 9.5 m3/kkg of HF (90% Reuse)

Pollutant	Treatability (mg/l)	VFR[1]	Achievable Concentration (mg/l)	
			Max 30-day Avg	24-hr Max
Nonconventional Pollutants:				
Fluoride, F	33	2.1	33	66
Toxic Pollutants:				
Antimony	0.70	2.0	0.70	1.4
Arsenic	0.50	2.0	0.50	1.0
Chromium	0.040	2.0	0.040	0.080
Copper	0.29	2.0	0.29	0.58
Lead	0.060	2.0	0.060	0.12
Nickel	0.15	2.0	0.15	0.30
Selenium	0.18	2.0	0.18	0.36
Zinc	0.52	2.0	0.52	1.0

(1) - VFR: ratio of the 24-hour variability factor to the 30-day variability factor.

of the BAT model plant discharge rate results in a corresponding loading limitation of 0.017 kg/kkg. That is,

$$(0.52\ mg/l)(33.4\ m3/kkg)\left(\frac{kg/m3}{1000\ mg/l}\right) = 0.017\ kg/kkg$$

and, for the daily maximum limitation using the VFR value of 2.0, one obtains,

$$(2.0)(0.017\ kg/kkg) = 0.034\ kg/kkg.$$

This represents an overall reduction of 43 percent from the BPT loading limitation. The VFR value of 2.0 used for BPT was also used for BAT because the variability of the filtrate quality is expected to be no greater than the observed variability of the unfiltered effluent at Plant #251 (Tables A-10a and A-10c). Treatability studies are being conducted by the EPA and the results on filter performance will be available prior to promulgation. The proposed BAT limitations on the toxic metals are included in Table 12-25.

B. Nickel: The addition of filtration to the BPT effluent is estimated to achieve a 14 percent reduction in the nickel concentration. The concentration basis for the proposed BAT limitation is therefore set at 0.15 mg/l and results in a maximum 30-day average loading limitation of 0.0050 kg/kkg. That is,

$$(0.15\ mg/l)(33.4\ m3/kkg)\left(\frac{kg/m3}{1000\ mg/l}\right) = 0.0050\ kg/kkg$$

and the daily maximum is,

$$(2.0)(0.0050\ kg/kkg) = 0.010\ kg/kkg.$$

This represents an overall 46 percent decrease from the corresponding BPT level. A VFR value of 2.0 was used following the same rationale as applied to zinc.

C. Lead: With the addition of filtration, providing an estimated 80 percent removal of the residual lead, the concentration basis for the proposed BAT limitation is set at 0.060 mg/l. This is in close agreement with the literature treatability data summarized in Table 8-11. On this basis, the maximum 30-day average effluent limitation for lead is 0.0020 kg/kkg. That is,

$$(0.060\ mg/l)(33.4\ m3/kkg)\left(\frac{kg/m3}{1000\ mg/l}\right) = 0.0020\ kg/kkg$$

and, the proposed daily maximum is,

$$(2.0)(0.0020 \text{ kg/kkg}) = 0.0040 \text{ kg/kkg}.$$

This represents nearly an 88 percent reduction from the BPT level. A VFR of 2.0 is used following the same rationale as applied to zinc.

D. Antimony: The addition of filtration is expected to decrease the antimony concentration by approximately 7 percent. Thus, the maximum 30-day average concentration basis is estimated as 0.70 mg/l. This establishes the corresponding loading limitation at 0.023 kg/kkg which is about 48 percent lower than the BPT limitation. The proposed maximum 30-day average limitation is,

$$(0.70 \text{ mg/l})(33.4 \text{ m3/kkg}) \left(\frac{\text{kg/m3}}{1000 \text{ mg/l}}\right) = 0.023 \text{ kg/kkg}$$

and the daily maximum is,

$$(2.0)(0.023 \text{ kg/kkg}) = 0.046 \text{ kg/kkg}.$$

The VFR is estimated to be 2.0 for the reason that this value was used for the BPT limitation on antimony.

E. Copper: Filtration of the BPT effluent is estimated to achieve approximately a 42 percent reduction in the average copper concentration. Thus, a value of 0.29 mg/l is used as the concentration basis for the proposed 30-day average effluent limitation of 0.0097 kg/kkg. That is,

$$(0.29 \text{ mg/l})(33.4 \text{ m3/kkg}) \left(\frac{\text{kg/m3}}{1000 \text{ mg/l}}\right) = 0.0097 \text{ kg/kkg}$$

and, the daily maximum limitation is,

$$(2.0)(0.0097 \text{ kg/kkg}) = 0.019 \text{ kg/kkg}.$$

This represents an overall reduction of 64 percent below the BPT level. A VFR value of 2.0 was used for the BAT limitations for the same reason described for zinc.

F. Chromium: For chromium, an average additional removal of approximately 60 percent is expected with the use of filtration. For this reason, the concentration basis for the proposed 30-day average BAT limitation is set at 0.040 mg/l. This results in a corresponding loading limitation of 0.0013 kg/kkg. That is,

$$(0.040 \text{ mg/l})(33.4 \text{ m3/kkg}) \left(\frac{\text{kg/m3}}{1000 \text{ mg/l}}\right) = 0.0013 \text{ kg/kkg}$$

and, the daily maximum limitation is,

$$(2.0)(0.0013 \text{ kg/kkg}) = 0.0026 \text{ kg/kkg}.$$

This represents an overall reduction of approximately 76 percent from the BPT level. A VFR value of 2.0 was also used for chromium for the same reasons presented for zinc.

G. Other metals: The concentration basis for arsenic and selenium are also given assuming 0 and 12 percent removals, respectively, by the addition of filtration to the BPT system. The values presented in Table 12-25 for these toxic pollutants are intended to be used as guidance in cases where they are found to be of serious concern.

12.7.5 Basis for Proposed New Source Performance Standards

Application of Advanced Level Treatment

Examination of raw waste loads indicates that the prime source of pollutants at HF plants is the kiln waste. Currently, two plants handle their kiln waste as a solid greatly reducing the total raw waste load and subsequent effluent. Based on this and an examination of control and treatment alternatives available to this industry, it has been determined that new HF facilities should achieve the effluent quality attainable by NSPS, Level 5, technology. The control parameters for NSPS are pH, TSS, fluoride, nickel, and chromium. The recommended treatment technology for new sources as described is dry handling of kiln wastes and chemical treatment, filtration and reuse of other treated wastes. The use of soda ash for precipitation of fluorides will allow approximately 60 percent reuse for air pollution control scrubbers, the second major source of waste water.

Raw waste toxic pollutant metal loadings from sources other than kiln wastes were minimal and only occasionally observed at potentially significant levels. It is assumed that following chemical precipitation for fluoride removal, the effluent loads discharged will be insignificant with regard to these metals.

Technology Basis

For new plants in the hydrofluoric acid industry, the specified waste treatment technology is the reduction of waste flow and pollutant loadings by the dry handling of kiln wastes and the treatment of other wastes by alkaline precipitation followed by settling of solids and filtration of the effluent. The technology also incorporates the reuse of 60 percent or more of the treated effluent for the air pollution control scrubbers. Two plants now practice dry handling of

kiln residues. This technology greatly reduces the waterborne raw waste loads and is available to new plants because they have the opportunity to design the most efficient systems without retrofitting. The dry solids generated would have to be handled and disposed of in a manner consistent with any applicable requirements of the Resource Conservation and Recovery Act (RCRA), 42 USC 6901 et. seq.

Pollutants limited by the proposed NSPS regulations are pH, TSS, fluoride, chromium, nickel, and zinc. Metals from scrubber water and other plant waste streams facilitates the reuse of 60 percent or more of the treated effluent for scrubber operation. Effluent reuse for this purpose is presently practiced in the hydrofluoric acid industry. Plant #722 reuses 92 to 100 percent of its soda ash treated waste water for both scrubber operation and kiln residue transport. Plant #664 reuses approximately 94 percent of similarly treated waste water for the same purposes. Information on these plants is summarized in Tables 12-5 and 12-20.

Flow Basis

The basis for the model plant total treatment system influent is the flow data on scrubber and other waste water sources (excluding gypsum slurry water) for five of the nine plants presented in Table 12-5. Plants #426, #722, and #837 were excluded because of incomplete data for scrubber effluent and Plant #167 because of an unusually high flow rate for the scrubbers. The average raw waste flow rate for the five remaining plants is 14.9 m3/kkg and with a reuse rate of 60 percent the net effluent is 6.0 m3/kkg.

Selection of Pollutants to be Regulated

For NSPS, the two major waste water sources of concern are the air pollution control scrubbers and "other" process wastes. The latter includes the indirect contact wastes from surface drains but excludes storm water runoff. The pollutant parameters of concern are pH, TSS, fluoride, and the toxic metals. Screening and verification sampling data on the raw scrubber and other sources confirm the need for limitations on pH, TSS, and fluoride. The four sets of sampling data from these sources indicate that the relative importance of the toxic metals is considerably less than was found for the BPT and BAT sources which included the kiln residue slurries. The observed maximum and average raw waste concentrations of the toxic metals are shown in Table 12-28. In the NSPS raw waste sources, nickel, zinc, chromium, and selenium were the only toxic metals which showed maximum concentrations that would be treatable by alkaline precipitation and filtration. Of these, selenium is marginal even at its maximum concentration and has an average concentration

TABLE 12-28. TOXIC POLLUTANT RAW WASTE DATA USED TO REPRESENT NEW SOURCES*

SUBCATEGORY: HYDROFLUORIC ACID

Pollutant	Concentration (1) Maximum (mg/l)	(2) Average (mg/l)
Antimony	0.030	0.014
Arsenic	0.014	0.0090
Cadmium	0.021	0.0080
Chromium	0.41	0.11
Copper	0.12	0.049
Lead	0.029	0.011
Mercury	0.0020	0.0010
Nickel	0.81	0.18
Selenium	0.24	0.068
Thallium	0.0040	0.0020
Zinc	0.45	0.15

* Based on four sets of screening and verification sampling data from Plants #705, #251, and #167 taking only the scrubber and "other" waste sources.

(1) Maximum value observed from screening and verification sampling data.

(2) Average value derived from screening and verification sampling data.

that is far below the minimum level treatable. For this reason, only nickel, chromium, and zinc have been selected as toxic pollutant control parameters for NSPS regulations.

Basis of Pollutant Limitations

Conventional Parameters -

A. pH: For NSPS, the BPT limitation is retained. Control of the final effluent within the range of pH 6.0 to 9.0 is required on the basis of data presented in Appendix B of this report and the JRB Study (52).

B. TSS: Although there is no applicable performance data available on the filtration of treated and clarified NSPS waste water, taking the proposed BPT maximum 30-day average concentration of 97 mg/l of TSS and assuming 30 percent additional removal by filtration, an estimated performance level of 68 mg/l is obtained. Pilot scale studies (41) have demonstrated an average removal by filtration of approximately 30 percent from waste water containing suspended metal hydroxides after lime treatment. A VFR of 2.1 is used on the basis of long term data summarized in Table 12-21 and described in the BPT section. Thus, the proposed maximum 30-day limitation on TSS is,

$$(68\ \text{mg/l})(6.0\ \text{m3/kkg})\left(\frac{\text{kg/m3}}{1000\ \text{mg/l}}\right) = 0.41\ \text{kg/kkg}$$

and, using the VFR value of 2.1,

$$(2.1)(0.41\ \text{kg/kkg}) = 0.86\ \text{kg/kkg}$$ is the proposed daily maximum.

The proposed NSPS limitations are presented in Table 12-29.

Nonconventional pollutants - The only nonconventional pollutant of concern is fluoride. The concentration basis for the proposed maximum NSPS 30-day average limitation is set equal to the 30 mg/l BAT model plant performance level (Table 12-25), because the treatment technology is the same. A VFR of 2.1 is used on the same basis given for the use of this ratio in the BPT and BAT limitations. Thus, the proposed 30-day average is,

$$(30\ \text{mg/l})(6.0\ \text{m3/kkg})\left(\frac{\text{kg/m3}}{1000\ \text{mg/l}}\right) = 0.18\ \text{kg/kkg}$$

and, using the VFR value of 2.1, the daily maximum is,

$$(2.1)(0.18\ \text{kg/kkg}) = 0.38\ \text{kg/kkg}.$$

TABLE 12-29. PROPOSED LIMITATIONS
Hydrofluoric Acid
New Source Performance Standards
Waste Water Flow: 6.0 m3/kkg (60% Reuse)

Pollutant	Treatability (mg/l)	VFR (1)	Concentration Basis (mg/l) 30-day Avg	Concentration Basis (mg/l) 24-hr Max	Effluent Limit (kg/kkg of HF) 30-day Avg	Effluent Limit (kg/kkg of HF) 24-hr Max
Conventional and Nonconventional Pollutants:						
Total Suspended Solids, TSS	68	2.1	68	143	0.41	0.86
Fluoride, F (2)	30	2.1	30	63	0.18	0.38
Toxic Pollutants:						
Antimony	0.70	2.0	0.70	1.4	— (3)	— (3)
Arsenic	0.5	2.0	0.5	1.0	— (3)	— (3)
Chromium (2)	0.040	2.0	0.040	0.080	0.00024	0.00048
Copper	0.29	2.0	0.29	0.58	— (3)	— (3)
Lead	0.060	2.0	0.060	0.23	— (3)	— (3)
Nickel (2)	0.15	2.0	0.15	0.30	0.00090	0.0018
Selenium	0.18	2.0	0.18	0.36	— (3)	— (3)
Zinc (2)	0.52	2.0	0.52	1.0	0.0031	0.0062

(1) - VFR: ratio of the 24 hour variability factor to the 30 day variability factor.
(2) - Also applicable for PSNS limitations.
(3) - No effluent limitations proposed.

Toxic pollutants -

A. Nickel: For the proposed NSPS limitation on nickel, the BAT concentration basis and VFR value are used because the treatment technology remains essentially the same. The proposed maximum 30-day average limitation is,

$$(0.15\ mg/l)(6.0\ m3/kkg)\left(\frac{kg/m3}{1000\ mg/l}\right) = 0.00090\ kg/kkg$$

and, with a VFR of 2.0, the daily maximum is,

$$(2.0)(0.00090\ kg/kkg) = 0.0018\ kg/kkg$$

The toxic pollutant limitations for NSPS are presented in Table 12-29.

B. Chromium: Similarly for chromium, the BAT concentration basis and VFR value are again used for the proposed NSPS limitations. Thus, for chromium, the proposed maximum 30-day average limitation is,

$$(0.040\ mg/l)(6.0\ m3/kkg)\left(\frac{kg/m3}{1000\ mg/l}\right) = 0.00024\ kg/kkg$$

and the daily maximum is,

$$(2.0)(0.00024\ kg/kkg) = 0.00048\ kg/kkg$$

C. Zinc: In the case of zinc, the concentration basis for the proposed maximum 30-day average is the same as BAT (0.52 mg/l). Thus, the maximum 30-day average limitation is,

$$(0.52\ mg/l)(6.0\ m3/kkg)\left(\frac{kg/m3}{1000\ mg/l}\right) = 0.0031\ kg/kkg$$

and, the daily maximum is,

$$(2.0)(0.0031\ kg/kkg) = 0.0062\ kg/kkg$$

D. Other metals: The concentration bases for antimony, arsenic, copper, lead, and selenium are also provided in Table 12-29 to be used as guidance in cases where one or more of these toxic metals may be of more serious concern.

12.7.6 Basis for Proposed Pretreatment Standards

Existing Sources

For Pretreatment Standards for Existing Sources (PSES), the Agency is proposing limitations based on BAT. The pollutants to be limited are fluoride, antimony, chromium, copper, lead,

nickel, and zinc as indicated in Table 12-22. However, at this time, there are no indirect dischargers in the HF industry.

New Sources

For Pretreatment Standards for New Sources (PSNS), the Agency is proposing limitations based on NSPS. The pollutants to be regulated are fluoride, nickel, chromium, and zinc as indicated in Table 12-29.

Intentionally Blank Page

SECTION 13

HYDROGEN PEROXIDE INDUSTRY

13.1 SUMMARY OF DETERMINATIONS

It has been determined that no further effort be given to developing or revising BAT, NSPS, or pretreatment regulations for the Hydrogen Peroxide Subcategory using either the electrolytic process or the organic process.

The bases for this recommendation are: 1) only one plant exists that manufactures hydrogen peroxide using the electrolytic process and 2) no toxic pollutants were found in the wastes using the organic process. Therefore this subcategory is excluded under Paragraph 8 of the Consent Decree.

13.2 ASSESSMENT OF THE WATER POLLUTION POTENTIAL

13.2.1 Production Processes and Effluents

In the electrolytic process, ammonium (or other) bisulfate solution is electrolyzed, yielding ammonium persulfate at the anode and hydrogen gas at the cathode. The presulfate is then reacted with water to yield hydrogen peroxide and original bisulfate. Hydrogen peroxide is separated from bisulfate by fractionation, after which it is concentrated and filtered. The only waste is a stream of condensate from the fractionation condenser.

The organic process involves the reduction of alkylanthraquinone by hydrogen over a supported metal catalyst to produce the corresponding alkylhydroanthraquinone. The reacted mixture is oxidized to form hydrogen peroxide and original alkylanthraquinone. The peroxide is extracted with water and the organic material in the solvent is recycled to the process. Since hydrogen peroxide manufactured by the organic process consists of a series of exothermic chemical reactions, the bulk of the water usage is for process cooling (contact and noncontact). Noncontact cooling accounts for over 90 percent of the total water usage in this subcategory. The waste water sources include contact cooling (barometric-condenser) water,

purification washing of the organic working solutions, regeneration waste from the deionizers, and leaks and spills.

13.2.2 Plants

Only one plant exists in the United States that manufactures hydrogen peroxide using the electrolytic process. The hydrogen peroxide subcategory profile data received in response to 308 letters is given in Table 13-1.

Three plants produce hydrogen peroxide by the organic process.

13.2.3 Toxic Pollutants

Data has been received on 100 percent of the industry as a result of section 308 letters. A sampling survey for toxic pollutants was made for three plants. At one plant, pentachlorophenol was found in significant concentrations. However, it was determined that is presence was due to its use as a weed killer at the plant site and this use was discontinued. Two more plants were sampled in the verification phase, and the survey indicated that no toxic pollutants were being discharged in significant quantities.

Toxic pollutants found during sampling were as follows:

Pollutant	Maximum Concentration Observed (µg/l)
Zinc	256
Pentachlorophenol	4850
Bis(2-ethylhexyl)phthalate	20
Chloroform	11
Naphthalene	11

13.3 STATUS OF REGULATIONS

Since no toxic pollutants were found in significant concentrations, the subcategory is excluded under Paragraph 8.

TABLE 13-1 - SUBCATEGORY PROFILE DATA SUMMARY

SUBCATEGORY	HYDROGEN PEROXIDE
Total subcategory capacity rate	
Total subcategory production rate	85,700 kkg/year
Number of plants in this subcategory	4
308 Data on file for	4
With total capacity of	102,200 kkg/year
With total production of	57,000 kkg/year
Representing capacity	
Representing production	66 percent
Plant production range:	
Minimum	5,560 kkg/year
Maximum	28,730 kkg/year
Average production	NA
Median production	NA
Average capacity utilization	NA
Plant age range:	
Minimum	15 years
Maximum	27 years
Waste water flow range:	
Minimum	NA
Maximum	NA
Volume per unit product:	
Minimum	NA
Maximum	NA

Sources of data are Stanford Research Institute, Directory of Chemical Producers, U.S.A., 1977, U.S. Department of Commerce, Current Industrial Reports, December 1977; Energy and Environmental Analysis, Inc.; Draft Report, "Preliminary Economic Assessment of Effluent Limitations in the Inorganic Chemical Industry," June, 1978 and "Economic Analysis of Proposed Revised Effluent Guidelines and Standards for the Inorganic Chemicals Industry," March, 1980.

NA = Not Available.

Intentionally Blank Page

SECTION 14

TITANIUM DIOXIDE INDUSTRY

(RUTILE/UPGRADED ILMENITE -- CHLORIDE PROCESS)

14.1 INDUSTRY PROFILE

14.1.1 General Description

Titanium dioxide is manufactured by a chloride process, a sulfate process, and a chloride-ilmenite process. This subcategory is subdivided into three segments, one for each processs because of the difference in raw materials used, waste water flows, and raw waste characteristics. TiO_2 is a high volume chemical, ranking within the first fifty of all U.S. chemicals production. Over fifty percent of the titanium dioxide produced is used in paints, varnishes and lacquers. About one third is used in the paper and plastics industries. Other uses are found in ceramics, ink and rubber manufacturing.

The industrial profile data for the chloride segment are presented in Table 14-1, while the status of regulations is given in Table 14-2.

14.1.2 General Process Description and Raw Materials

In the chloride process, the raw materials used are rutile or upgraded ilmenite ore, which are relatively pure materials with a high titanium and a low iron content. For upgrading ilmenite ($FeTiO_3$), a beneficiation process removes a part or all of the iron. Several patented processes exist for the beneficiation step and two or three are in current operation on a commercial scale. The wastes from the chloride process using beneficiation of ilmenite in titanium dioxide production are different from those produced using high grade titanium ore (rutile or upgraded ilmenite). The Titanium Dioxide Subcategory has been classified further into three separate categories: sulfate process using ilmenite ore, chloride process using rutile or upgraded titanium ore, and chloride process using ilmenite ore. This section is restricted to the chloride process using rutile ore.

TABLE 14-1 - SUBCATEGORY PROFILE DATA SUMMARY

SUBCATEGORY	TITANIUM DIOXIDE (CHLORIDE PROCESS)
Total subcategory capacity rate	610,000 kkg/year
Total subcategory production rate	389,000 kkg/year
Number of plants in this subcategory	5
308 Data on file for	5
With total capacity of	184,600 kkg/year
With total production of	142,000 kkg/year
Representing capacity	30 percent
Representing production	37 percent
Plant production range:	
Minimum	16,900 kkg/year
Maximum	45,200 kkg/year
Average production	28,400 kkg/year
Median production	25,600 kkg/year
Average capacity utilization	77 percent
Plant age range:	
Minimum	6 years
Maximum	15 years
Waste water flow range:	
Minimum	1,140 cubic meters/day
Maximum	4,770 cubic meters/day
Volume per unit product:	
Minimum	29.3 cubic meters/kkg
Maximum	110 cubic meters/kkg

Sources of data are Stanford Research Institute, Directory of Chemical Producers, U.S.A., 1977, U.S. Department of Commerce, Current Industrial Reports, December 1977; Energy and Environmental Analysis, Inc.; Draft Report, "Preliminary Economic Assessment of Effluent Limitations in the Inorganic Chemical Industry," June, 1978, and "Economic Analysis of Proposed Revised Effluent Guidelines and Standards for the Inorganic Chemicals Industry," March, 1980.

TABLE 14-2 - STATUS OF REGULATIONS - EFFLUENT LIMITATION GUIDELINES

SUBCATEGORY Titanium Dioxide

SUBPART V (40 CFR 415.220, 3/12/74)

		STANDARDS					
		BPCTCA*		BATEA*		NSPS*	
Product Process	Parameters	Max.[1] kg/kkg (mg/l)	Avg.[2] kg/kkg (mg/l)	Max. kg/kkg (mg/l)	Avg. kg/kkg (mg/l)	Max. kg/kkg (mg/l)	Avg. kg/kkg (mg/l)
Chloride Process	TSS	4.6	2.3	2.6	1.3	2.6	1.3
	Iron	0.72	0.36	0.36	0.18	0.36	0.18
Sulfate Process	TSS	21.0 (100.0)**	10.5 (50.0)	10.6	5.3	10.6	5.3
	Iron	1.7 (8.1)	0.84 (4.0)	0.84	0.42	0.84	0.42

*Sections 415.220, 415.222, 415.223, and 415.225 were remanded and are presently reserved (41 FR 51601, November 23, 1976).

[1]Max. = Maximum of any one day.

[2]Avg. = Maximum average of daily values for thirty consecutive days.

**flow basis 210,000 l/kkg.

In the chloride process, the ore and coke are dried and then reacted with chlorine to form titanium tetrachloride. The chemical reaction taking place in the reactor is given as:

$$3C + 2TiO_2 + 4Cl_2 = 2TiCl_4 + CO_2 + 2CO \quad (1)$$

The reaction takes place at a temperature of 800-1000 degrees C and a fluidized bed reactor is generally used. The product gases leaving the reactor consist of titanium tetrachloride, unreacted chlorine, carbon dioxide, carbon monoxide and minor amounts of heavy metal chlorides. The gases are initially cooled to 250 degrees C to remove the impurities, although in some cases purification is accomplished by washing the gases with liquefied titanium tetrachloride. Iron chloride and small amounts of vanadium, zirconium, and other trace metal chlorides are removed by centrifugation and the liquid recycled to the absorber. Titanium tetrachloride is liquefied from the gases after the first stage of cooling by further cooling to ambient temperature. Copper, hydrogen sulfide and, in some cases, proprietary organic complexing agents are added for purification to the condensed solution. Copper acts as a catalyst to decompose the phosgene formed in the $TiCl_4$ stream. Organic complexing agents aid in separation of the $TiCl_4$ from other chlorides such as cupric chloride and silicon tetrachloride.

The residual uncondensed gases generally consist of hydrochloric acid, chlorine, carbon monoxide, carbon dioxide, nitrogen, and some titanium tetrachloride. They are treated to remove acidic materials before being vented to the atmosphere.

The liquefied titanium tetrachloride contains impurities such as aluminum chloride, silicon tetrachloride, etc., which are removed by distillation. The distillate is the purified titanium tetrachloride and the impurities remain as a residual which becomes waste. The tail gases from the distillation column are scrubbed to remove acidic materials. The titanium tetrachloride product is then reacted with oxygen, as air, forming titanium dioxide and chlorine:

$$TiCl_4 + O_2 = TiO_2 + 2Cl_2 \quad (2)$$

The rate of reaction is negligible below 600 degrees C but increases rapidly above this temperature, and is generally maintained between 1200-1400 degrees C for efficient reaction and conversion. The needed heat is supplied by passing the reactants through heat exchangers, by electric dischargers, or by use of fluidized beds. After the oxidation reaction, the titanium dioxide forms a solid and is separated from the gases either in cyclones, baghouse filters, or Cottrell precipitators. The residual chlorine is refrigerated and liquefied. The tail

gases are scrubbed with caustic soda to remove chlorine before being vented to the atmosphere. When air is used for oxidation, chlorine recovery is achieved by absorption in trichlorethylene, followed by distillation to remove chlorine. The titanium dioxide is then sent to the finishing operation where it is vacuum degassed and then treated with alkali, using a minimum amount of water to remove traces of absorbed chlorine and hydrochloric acid. The pigment is then milled, surface treated for end-use application, dried, and packaged for sale. A generalized process flow diagram, including the waste streams, is shown in Figure 14-1.

14.2 WATER USE AND WASTE SOURCE CHARACTERISTICS

14.2.1 Water Use

Water Use

Water is used in noncontact cooling, for scrubbing the tail gases from the purification and oxidation reactor to remove contaminants, and in the finishing operation of the product. The total amount of water usage varies from 45.3 to 555 m3/kkg of TiO2 produced, as shown in Table 14-3. The table also shows that cooling water constitutes the major use of water and varies from 10.7 to 426 m3/kkg of TiO2 produced.

14.2.2 Waste Sources

Wastes from Cooling Chlorinator Gas

The waste consists of solid particles of unreacted ore, coke, iron, and small amounts of vanadium, zirconium, chromium, and other heavy metal chlorides. They are either dissolved in water and sent to the waste water treatment facility or disposed of in landfills as a solid waste.

Chlorinator Process Tail Gas Scrubber Waste

The uncondensed gases, after the liquefaction of titanium tetrachloride, are initially wet scrubbed to remove hydrogen chloride, chlorine, phosgene, and titanium tetrachloride and chlorine. In a second stage, they are scrubbed with caustic soda to remove chlorine as hypochlorite.

Distillation Bottom Wastes

These contain copper, sulfide, and organic complexing agents added during purification in addition to aluminum, silicon, and zirconium chlorides. These are removed as waterborne wastes and reaction with water converts silicon and anhydrous aluminum chlorides to their respective oxides.

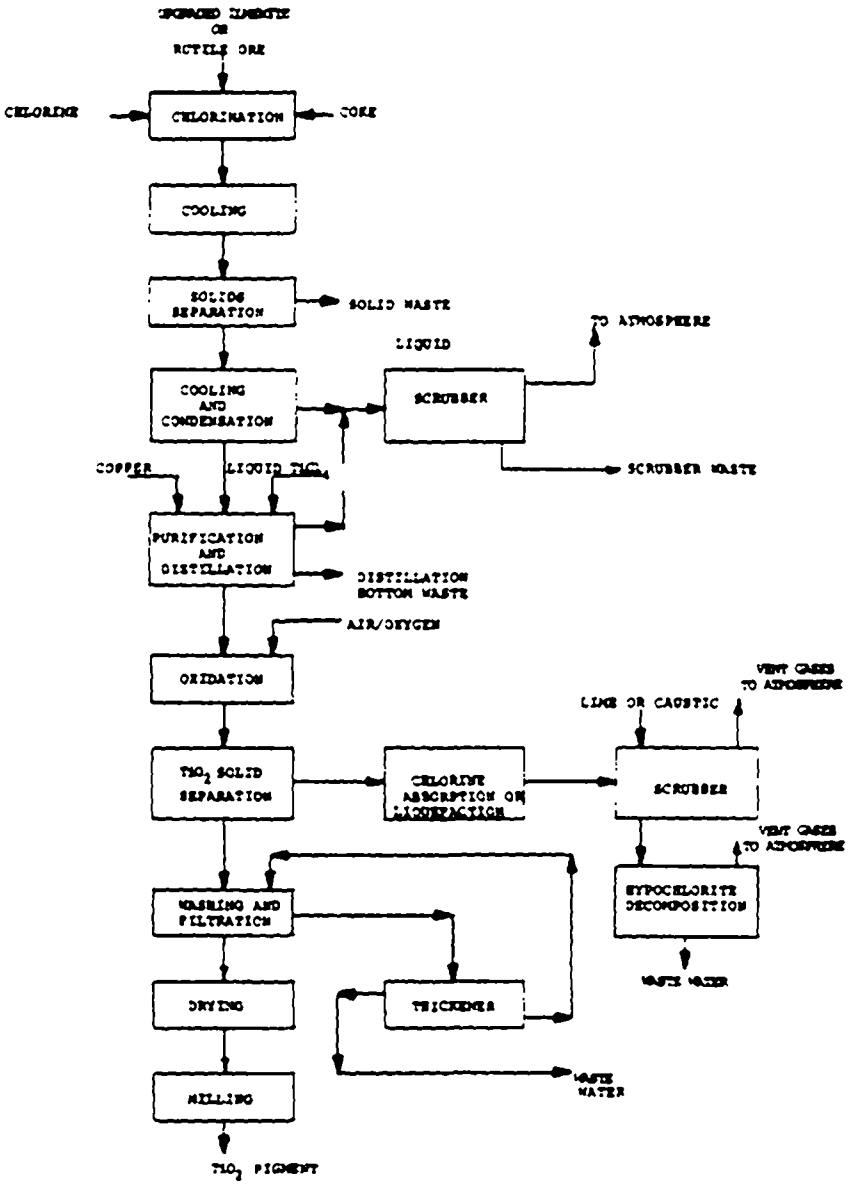

Figure 14-1. General process diagram for production of titanium dioxide (chloride process) from high grade ores.

TABLE 14-3. WATER USAGE IN TITANIUM DIOXIDE-CHLORIDE PROCESS/HIGH GRADE ORES SUBCATEGORY

Water Use	Water usage at plants (m^3/kkg of TiO_2) Water Use		
	Plant #102	Plant #172	Plant #199
Noncontact cooling	182	10.66	426
Direct process contact	10.5	15.53	73.2
Indirect process contact	NA	0.72	26.5
Maintenance, equipment cleaning and work area washdown	6.65	0.52	2.80
Air pollution control	0.25	7.14	11.3
Noncontact ancillary uses	11.60	10.4	9.5
Sanitary & potable water	0.23	0.31	5.6
Total	211.23	45.28	554.9

NA = Not available

Oxidation Tail Gas Scrubber Wastes

The gases from the oxidation unit are cooled by refrigeration to liquefy and recover chlorine. The uncondensed off-gases are scrubbed with water or caustic soda to remove residual chlorine. When caustic soda is used as the scrubbing solution, the resulting solution of sodium hypochlorite is either sold, decomposed, sent to the waste water treatment facility, or discharged without treatment. The scrubber waste stream also contains titanium dioxide particulates.

Finishing Operations Waste

The liquid wastes from the finishing operation contains titanium dioxide as a suspended solid and dissolved sodium chloride formed by the neutralization of residual HCl with caustic soda.

The range of waste water flows requiring treatment is summarized in Table 14-4. The wide range of flow occurs because some plants use additional water to wash solid process residues to the waste treatment system.

14.3 DESCRIPTION OF PLANTS VISITED AND SAMPLED

14.3.1 Screening

Plant #559 was visited and the waste effluents sampled in the screening phase of the program. Plant #559 makes titanium dioxide using both the sulfate and the chloride processes. The waste waters from both processes are mixed and undergo combined treatment.

The solids from the chloride process, called pit solids, (mainly unreacted ore, coke, iron, and trace metal chlorides including $TiCl_4$) are separated from the first stage cooling of the chlorinated gases and are slurried with water. The slurried pit solids and the distillation column bottom residue effluents from the chloride process are sent to a large settling pond (called the weak acid pond) where they are mixed with the weak acid from the sulfate process. The overflow from the settling pond is neutralized with ground calcium carbonate in a reactor. The reactor effluent is filtered, aerated to remove iron and combined with neutralized strong-acid waste effluent (from the sulfate process). The combined scrubber and contact cooling waste water from both sulfate and chloride processes is also combined at this point. The combined waste water is neutralized and solids settled out in a pond prior to final discharge. A flow diagram of the treatment facility including the sampling locations is shown in Figure 14-2.

TABLE 14-4. WASTE WATER FLOW FOR TITANIUM DIOXIDE-CHLORIDE PROCESS SUBCATEGORY

SUBCATEGORY	TITANIUM DIOXIDE (Chloride Process)
Plant #	Unit Waste Water Flow Going to Treatment Plant (m3/kkg of TiO2)
102	29.3 (1)
172	34.7 (1)
559	91.0 (2)
199	110.0 (2)

(1) Offsite disposal of process solid residues.
(2) Process solid residues are slurried to waste treatment. The average flow of Plants #559 and #199 was used as the model plant flow for cost estimating and regulation development.

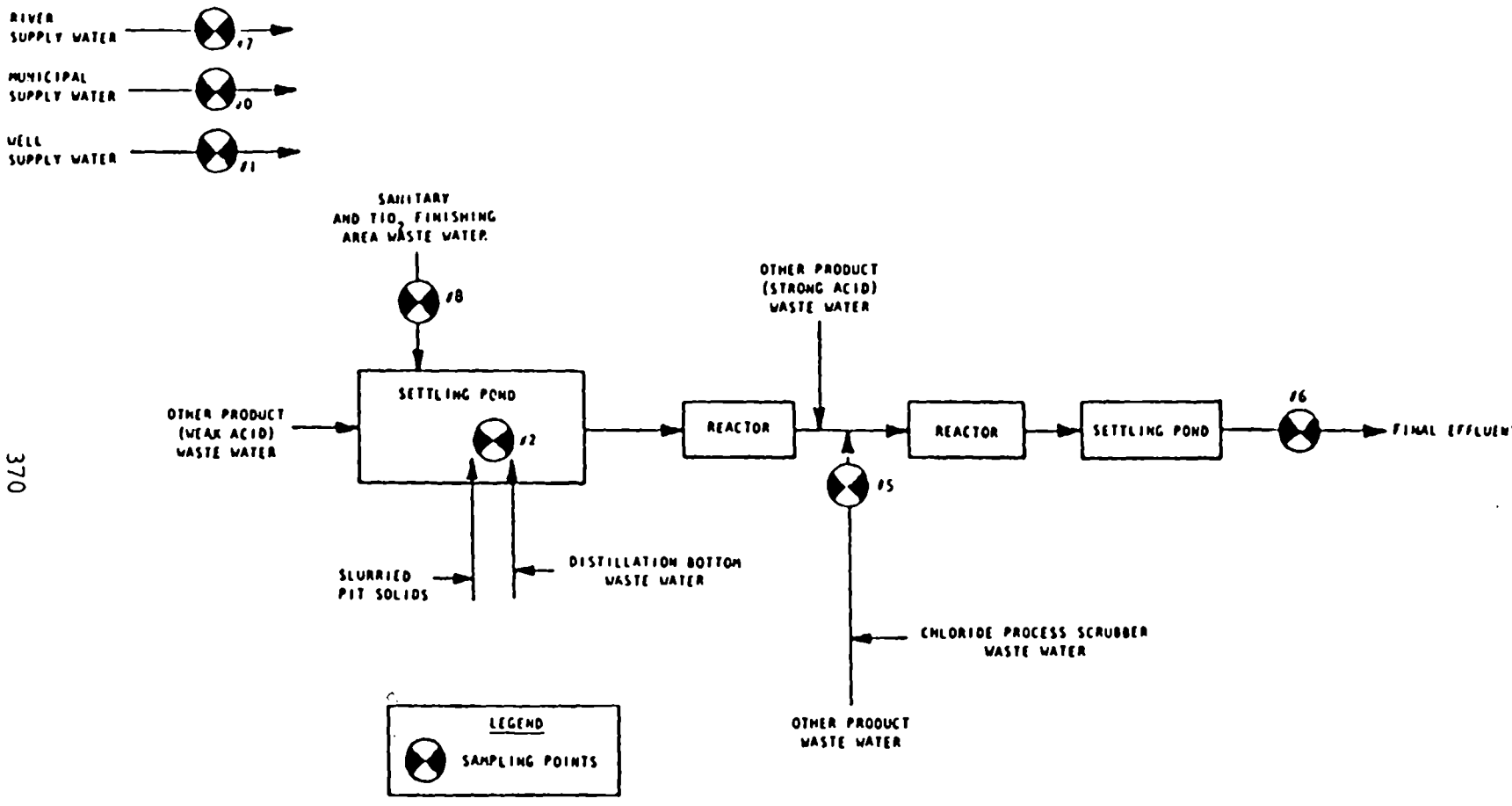

Figure 14-2. General flow diagram at Plant #559 showing the sampling points. (Titanium dioxide -- chloride process manufacture.)

Problems were encountered during the sampling of the pit solids and the distillation bottoms. The pipes carrying the wastes from the process discharged at the bottom of the settling pond and it was not possible to take the samples right at the outlet of the pipe. The combined sample of the two streams was taken at the surface of the discharge. It is probable that some solids settled before the stream reached the surface. Table 14-5 gives the waste flows and pollutant loadings for the streams sampled at Plant #559. Because of the intermixing of the waste effluents from both chloride and sulfate processes, the pollutant loadings in Table 14-5 were calculated by proportioning according to the relative hydraulic loadings.

14.3.2 Verification

Plant #172 was sampled in the verification phase. Titanium dioxide is made at this facility by the chloride process only. The strong acid wastes and the spent coke and ore residues are hauled to a secure chemical landfill for disposal. The waste water from the process, mainly the scrubber water, is collected in trenches and sent to a central reactor basin. Other discharges, including a part of the total rain runoff, are also collected in ditches and sent to the reactor basin. In the reactor basin, sodium hydroxide is used for neutralization, and the resulting effluent is mixed with the remaining rain water runoff and sent to the first of two retention basins arranged in series. The overflow from the second retention is pH adjusted with sulfuric acid before discharge. A simplified diagram of the treatment system, including the sampling points, is shown in Figure 14-3. Table 14-6 gives the waste flow and pollutant loadings for the streams sampled.

14.3.3 Toxic Pollutant Concentrations

Five toxic pollutants were found above the treatability levels in the raw waste of plant #559. It is possible that some of the pollutants might be from the sulfate process waste water as the two raw waste effluents are intermixed before treatment. One pollutant was found above the treatability level in the raw waste of Plant #172. No organic toxic pollutants were found above treatment levels in the raw wastes of either plant. The maximum concentration of the toxic pollutants found in the raw waste in significant concentration in the screening and verification program were:

TABLE 14-5. FLOW AND POLLUTANT CONCENTRATION DATA OF THE SAMPLED WASTE STREAMS OF PLANT #172 PRODUCING TITANIUM DIOXIDE BY CHLORIDE-RUTILE PROCESS

	STREAM #2			STREAM #5			CALCULATED ESTIMATE			STREAM #6 (1)		
	Pit Solids and Distillation Bottoms			Scrubber and Contact Cooling Water			Total Raw Waste			Treated Effluent		
	A	B	C	D	E	F	G	H	I	J	K	L
Pollutant	Unit Flow (m3/kkg)	Conc., (mg/l)	($A \times B \times 10^{-3}$) Unit Load (kg/kkg)	(Unit Flow) (m3/kkg)	Conc. (mg/l)	($D \times E \times 10^{-3}$) Unit Load (kg/kkg)	(A+D) Unit Flow (m3/kkg)	(C+F) Unit Load (kg/kkg)	($H \times 10^{-3}$/G) Conc. (mg/l)	Unit Flow (m3/kkg)	Conc. (mg/l)	Unit Load (kg/kkg)
	10.9			80.1			91			91		
TSS		6903	75.2		314	25.2		100.4	1103		23	2.1
Iron		1348	14.7		143	11.5		26.2	288		4.4	0.4
Chromium		112	1.2		0.11	0.01		1.21	13.3		0.03	0.003
Lead		3.53	0.04		0.009	0.001		0.041	0.5		0.002	0.0002
Nickel		3.46	0.04		0.016	0.001		0.041	0.5		0.005	0.0004
Zinc		2.12	0.02		0.13	0.01		0.03	0.3		0.06	0.005

(1) See Figure 14-2 for location of sampling points

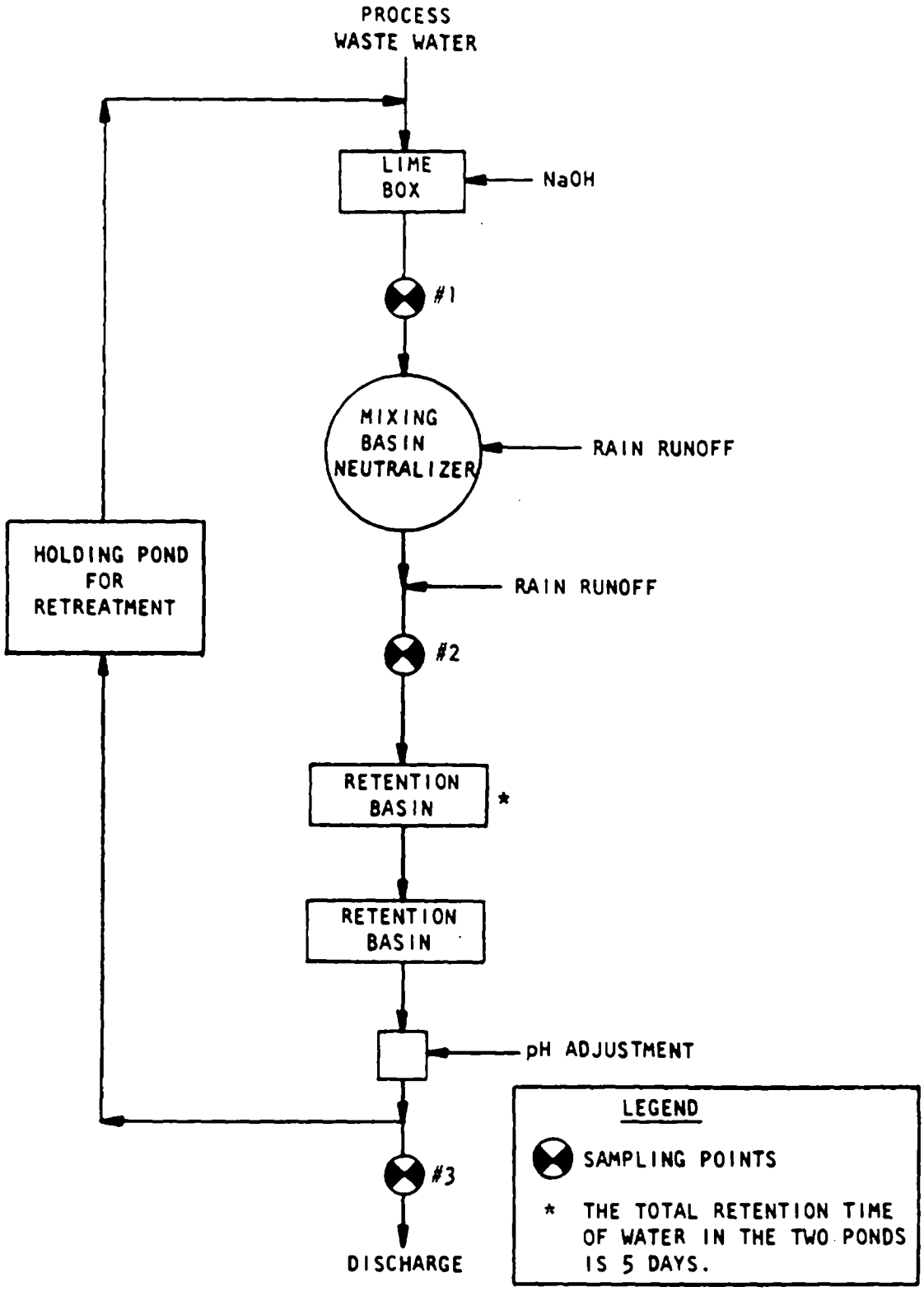

Figure 14-3. General flow diagram at Plant #172 showing the sampling points. Titanium dioxide (chloride process) manufacture.

TABLE 14-6. FLOW AND POLLUTANT CONCENTRATION DATA OF THE SAMPLED WASTE STREAMS FOR PLANT #172 PRODUCING TITANIUM DIOXIDE (CHLORIDE PROCESS)

Pollutant	SAMPLED STREAM #1			SAMPLED STREAM #3		
	Raw Waste Influent			Treated Effluent		
	A	B	C	D	E	F
	Unit Flow (m^3/kkg)	Avg. Conc. (mg/l)	($A+B \times 10^{-3}$) Unit Load (kg/kkg)	Unit Flow (m^3/kkg)	Avg. Conc. (mg/l)	($D+E \times 10^{-3}$) Unit Load (kg/kkg)
	34.7			34.7		
TSS		171	5.93		6.7	0.23
Iron		2.9	0.10		0.33	0.01
Chromium		0.72	0.03		0.02	0.0007
Lead		0.005	0.0002		0.002	0.00007
Nickel		0.08	0.003		0.01	0.0003
Zinc		0.3	0.01		0.09	0.003

Maximum Raw Waste Concentrations Observed (µg/l)

Pollutant	Screening Plant #559	Verification Plant #172
Chromium	152,000	1800
Lead	5,150	NS*
Nickel	6,320	NS
Zinc	3,300	NS

*NS - Concentration was found below the lower limit of treatability; i.e., not significant.

The screening and verification sampling program and the methodology used have been described in Section 5.1.2 of this report. A total of six days of sampling was conducted at Plants #559 and #172. Five effluent waste streams were sampled at Plant #559 and three streams were sampled at Plant #172. At each sampling point, three 24-hour composite samples were collected for analysis. The evaluation of toxic metal content of these process related waste streams was based on 550 analytical data points. The average unit loadings and concentrations for conventional, nonconventional, and toxic pollutants found in the raw waste effluents for Plants #559 and #172 are given in Table 14-7.

The total quantities of toxic pollutants generated each year for this subcategory (calculated as total subcategory production times average unit toxic pollutant load from Table 14-7) are as follows:

Pollutant	Waste Load (kg/year)
Chromium	241,000
Lead	8,200
Nickel	8,500
Zinc	7,800

14.4 POLLUTION ABATEMENT OPTIONS

14.4.1 Toxic Pollutants of Concern

The dominant toxic pollutant in untreated effluents in the Titanium Dioxide (chloride process) Subcategory is chromium. Chromium was found in treatable concentrations at both plants sampled in the screening and verification phase. Lead, nickel, and zinc were found in the raw waste of Plant #559 at treatable levels, but were not present in the Plant #172 raw waste. At Plant #559, the chloride process waste effluents are mixed with

TABLE 14-7. RAW WASTE POLLUTANT DATA SUMMARY OF THE SAMPLED STREAMS

SUBCATEGORY: TITANIUM DIOXIDE (CHLORIDE PROCESS)

Average Daily Pollutant Concentration and Loadings at Plants Sampled
(kg/kkg of TiO_2)
(mg/l)

Pollutant	Plant #559	Plant #172	Overall Average
Toxic :			
Iron	26.2 (288)	0.10 (2.9)	13.15
Chromium	1.21 (13.3)	0.03 (0.72)	0.62
Lead	0.041 (0.5)	0.0002 (0.005)	0.021
Nickel	0.041 (0.5)	0.003 (0.08)	0.022
Zinc	0.03 (0.3)	0.01 (0.3)	0.02
Conventional:			
TSS	100.4 (1103)	5.93 (171)	53.17

the sulfate process waste effluents before treatment. It is likely that the three major toxic pollutants found were contributed by the sulfate process wastes, as it uses a low purity ore (ilmenite). At Plant #172, the solids generated from the chloride process (which consist of solid particles of unreacted ore, coke, iron, and other heavy metals) are hauled to a landfill for disposal. It seems probable that the three pollutants are present in this solid waste and hence do not appear in the waste waters.

14.4.2 Process Modification and Technology Transfer Options

1. Research to develop economical techniques to recover the vanadium and other metal values from the solid wastes generated from the process waste treatment system would appear to be a fruitful area of investment.

2. New plants can utilize refrigeration and high pressures for chlorine liquefaction. This would reduce or eliminate the chlorine residual problem in the tail gases. The capital cost to modernize old plants is high, but these plants should have a caustic soda or lime scrubber instead of a water scrubber to remove residual chlorine from the tail gases. Caustic or lime scrubbing removes a significant portion of the chlorine from the tail gases as seen from the analagous data for the chlorine subcategory given in Section 11.

14.4.3 Best Management Practices

Provision should be made at all plants to collect storm water runoff from the plant site and send it to the treatment facility. Three out of a total of five existing plants are presently treating storm water runoff.

14.4.4 Prevailing Control and Treatment Practices

At Plant #172, the solid wastes consisting of spent ore and coke are hauled to an off-site landfill. Process waste waters consisting of scrubber and contact-cooling effluents and a part of the surface runoff are sent to a mixing basin where they are neutralized with caustic soda. The effluent from the basin is then sent to two retention ponds in series. Additional or residual rain water runoff is added to the ponds for clarification. The overflow from the last pond is monitored and discharged to a surface stream. At Plant #559, the waste waters from both chloride and sulfate processes are mixed and treated together. The distillation bottoms and the unreacted ore and coke from the chloride process are combined with the weak acid effluent from the sulfate process in a pond. The overflow from the pond is neutralized with limestone and oxidized with air for the removal of iron. The waste water is then mixed with the

neutralized strong acid waste (from the sulfate process) and scrubber waters (from both the chloride and sulfate processes) and neutralized with lime in a reactor and sent to a final settling pond. The overflow from the pond is the final discharge.

At Plant #199, all the process waste waters are combined, including storm water and sanitary waste water. The combined waste water is sent to a four-stage neutralization system, and the effluent from each of the four stages of neutralization is sent to a thickener. The thickener overflow is transferred to the first of three settling ponds, also in series. The underflow from the thickener is heated to improve its filtration characteristics and filtered in four rotary drum filters. The thickened solids from the filters are disposed of in a landfill and the filtrate is combined with wash water, and vacuum pump seal water prior to being recycled to the fourth stage of the neutralization train. The overflow from the last settling pond is discharged.

The process waste water streams at Plant #102 are received in two tanks, neutralized with lime, and then sent to a settling basin. The settled solids are retained in the settling lagoons. The plant has future plans for treating boiler blowdown, and cooling tower blowdown, leaks and spills with the process waste water.

At Plant #605, the unreacted ore and coke is disposed of as a solid waste in the pit. The waste water from the process is passed to two tanks for flow equalization, and the water is then reacted with ground limestone slurried in water. The treated solution is centrifugally treated to remove coarse solids which are separated and landfilled. A flocculating agent is added to the centrate and the solution is sent to a clarifier. The clarifier overflow is degassed and the pH adjusted with caustic soda (if required) before discharge.

14.4.5 Advanced Treatment Technologies

Neutralization and settling are practiced for the treatment of chloride process raw waste effluents at all the five plants for which 308 data are available. Air oxidation, sulfide precipitation, xanthate precipitation, and ion exchange might be applied to the clarified solutions for control of metals. Sulfide precipitation or the xanthate process could be used to provide additional removal of zinc, lead, and nickel.

14.5 SELECTION OF APPROPRIATE TECHNOLOGY AND EQUIPMENT

14.5.1 Technologies for Different Treatment Levels

Level 1 (BPT)

The chloride process wastes are equalized, neutralized with lime to a pH range of 6 to 9, and settled in lagoons before discharge. Level 1 treatment is typical of industry practice and for this reason was selected as the technology basis for BPT regulations.

Level 2

Alkaline precipitation as a second-stage lime treatment to an optimum pH (9 to 10) is added to Level 1 to precipitate metallic hydroxides, which are then filtered before discharge. Filtration removes traces of metallic hydroxides which do not separate in a gravity system. Level 2 technology was utilimately selected as the basis for the proposed BAT limitations because it provides an economical method for the removal of additional toxic metals.

Level 3

Ferrous sulfide treatment is added ahead of the Level 2 filter to precipitate the heavy metals more effectively.

Alkaline precipitation was chosen as Level 2 because it readily supplements existing lime neutralization by the simple addition of filtration and increasing the Level 1 lime dosage. Sulfide precipitation was chosen at Level 3 because it provides a polishing treatment for most residual heavy metals beyond Level 2 treatment.

Figures 14-4, 14-5, and 14-6 show the model treatment systems adopted for the chloride process wastes.

14.5.2 Equipment for Different Treatment Levels

Equipment Functions

BPT treatment is essentially lagooning with lime neutralization, using no special equipment except a lime feeder and mixer.

In Level 2, second stage lime treatment is followed by gravity clarification and multi-media filtration, with necessary pH controls.

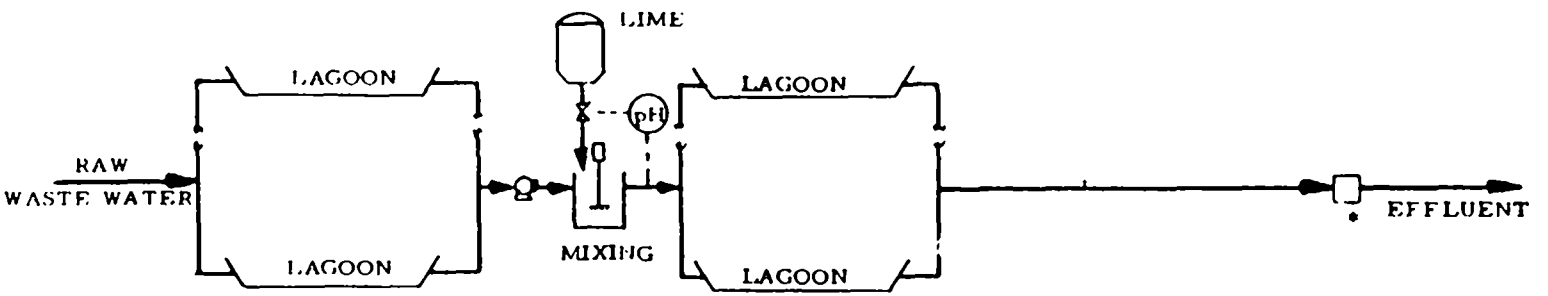

*Includes flow monitoring, pH monitoring and sampler.

Figure 14-4. Level 1 waste water treatment for titanium dioxide -- chloride process.

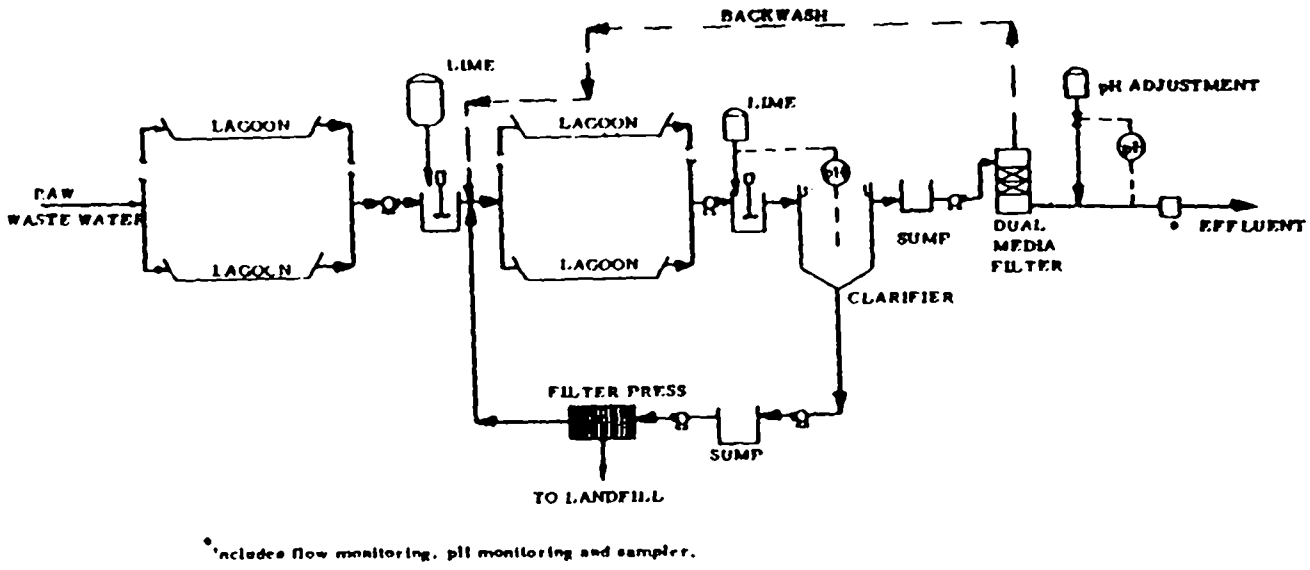

Figure 14-5. Level 2 waste water treatment for titanium dioxide -- chloride process.

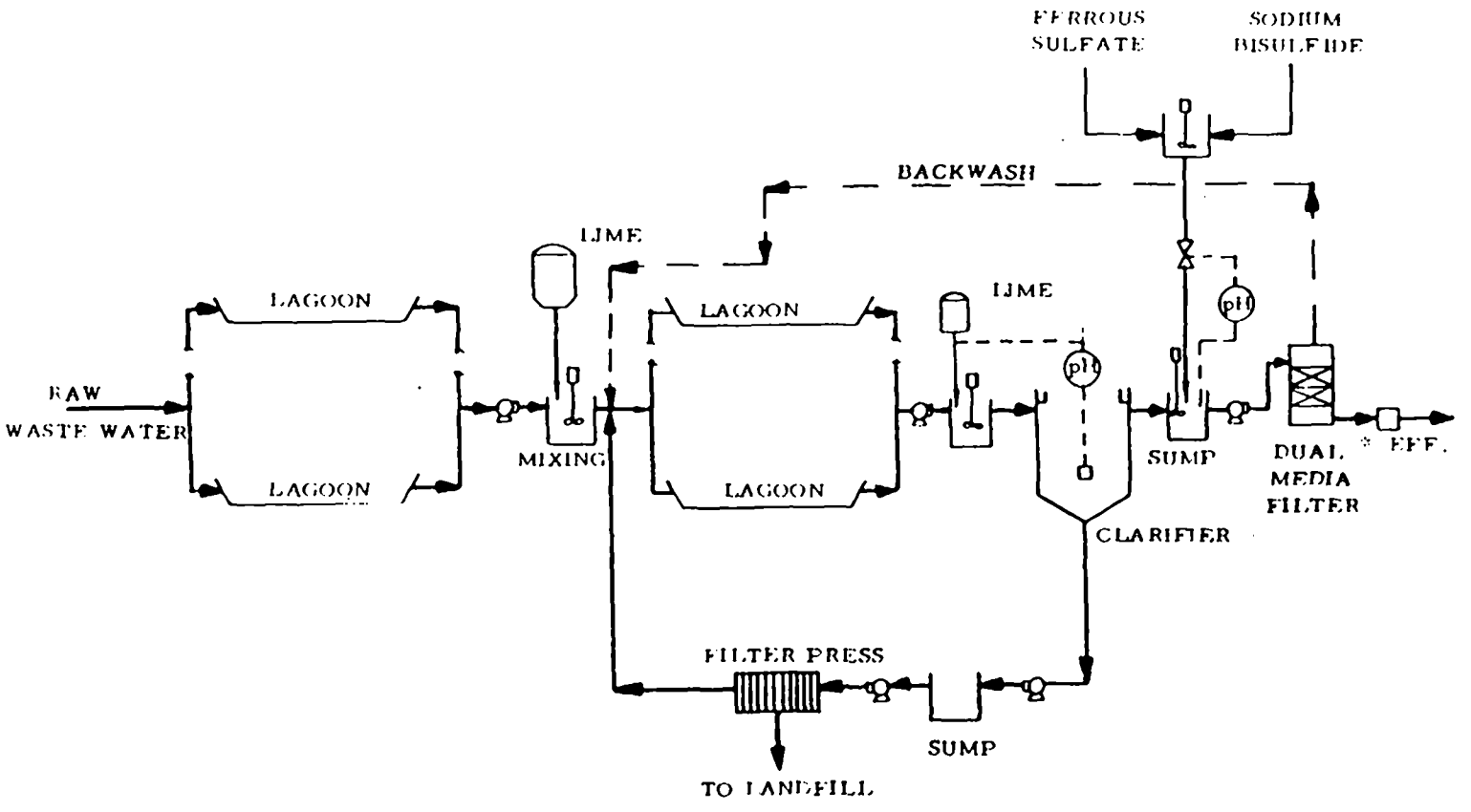

*Includes flow monitoring, pH monitoring and sampler

Figure 14-6. Level 3 waste water treatment for titanium dioxide — chloride process.

In Level 3, ferrous sulfide is added ahead of the Level 2 filter, to react with residual heavy metals more completely than in the alkaline precipitation step at Level 2.

Chemicals and Handling

Lime and hydrochloric acid are fed with conventional equipment at all levels, and ferrous sulfide is prepared on-site by mixing ferrous sulfate with sodium bisulfide. When normal dust control and good ventilation are used, there should be no adverse effects from handling these chemicals, although care should be taken that hydrogen sulfide gas is not generated.

Separation and Removal of Solids

Inert ore fractions and precipitated solids are accumulated in clay-lined lagoons, which are alternately drained. Solids are mechanically removed to self-draining 18 ft. high storage piles on land provided at the site for a 10-year operating period. At Levels 2 and 3, small amounts of heavy metal precipitates in the clarifier underflow are filter pressed and hauled to a secure landfill.

14.6 TREATMENT COST ESTIMATES

14.6.1 General Discussion

To determine the treatment cost, a model plant concept was developed. A raw waste unit flow was selected and pollutants to be treated were selected, based on the treatment system data available for the five TiO2 plants and the screening and verification sampling program. Three production levels were then selected to cover the entire subcategory range. Treatment costs for Levels 1, 2, and 3 were calculated for each of the model plant production ranges using the unit flow and unit pollutant loads. The preliminary cost data given in the cost tables and figures were generated using a low unit flow of 31 m3/kkg of TiO2 based on incomplete industry data. The new unit flow of 100 m3/kkg used for the model plant in regulation development has been selected to be more representative of the subcategory and it is assumed that the unreacted ore and coke are slurried and sent to the treatment system, instead of being disposed of in a landfill as a solid waste. The need for revising the preliminary cost estimates is being evaluated by the Agency and any appropriate changes will be made prior to promulgation. The model plant specifications presented here were used in regulation development.

Waste Water Flow

The unit waste effluent flow varies from 29.3 to 110.0 m3/kkg of TiO2 for the four plants as shown in Table 14-4. The primary reason for the variation in the flow is that some plants slurry the spent ore and coke (solid waste from chloride process) and send it to the treatment system, and others haul the dry solids to a landfill. The flow variation is also dependent on the difference in the chlorine recovery process from the tail gas and the amount of scrubbing liquid used. Small variations in flow also result from the finishing operation which is dependent on the type of titanium dioxide end product desired. Plants #559 (unit flow of 91 m3/kkg) and #199 (unit flow of 110 m3/kkg) sent the solid waste from the manufacturing process to the treatment facility. It is assumed for treatment system cost estimation that the solids are included in the raw waste flow to the treatment system. A constant unit flow of 100 m3/kkg of TiO2 has been used for the model plants, which is an average of the unit flows of Plants #559 and #199.

Pollutant Load

The primary pollutants occurring in the waste water are suspended solids, acidity, and the chlorides of ferric iron, chromium and other trace metals. The suspended solids (TSS) loading values for Plants #559 and #172 are 100.4 and 5.93 kg/kkg of TiO2 (Table 14-7). The low value represents a plant that hauls ore and coke off-site, while the high value is believed to be due to nonrepresentative sampling. The amount of solids produced are higher than the values indicated for the sampled plants. Consequently, a higher suspended solids loading of 500 kg/kkg of TiO2 (reported in the 308 data from Plant #199) is assumed for the model plants. To establish treatment chemical requirements and related costs, the toxic pollutant loadings for the model plant are taken as the average values of the unit pollutant loadings of the plants sampled in the screening and verification program (Table 14-6) and the selected pollutant values are:

Pollutant	Unit Loading (kg/kkg of TiO2)
Chromium	0.62
Lead	0.021
Zinc	0.020
Iron	13.15
Nickel	0.022

Production Rates

Five plants produce titanium dioxide from rutile ore or ilmenite ore, using the chloride process at a total production

rate of 142,000 metric tons per year. Production ranges from a minimum of 16,900 kkg/year to a maximum of 45,200 kkg/year with a mean of 28,400 kkg/year and a median of 25,600 kkg/year. For waste water treatment cost estimates, three production levels were selected as model plants. These are 16,900 kkg/year, 25,500 kkg/year, and 45,200 kkg/year. This range of production includes all United States plants.

The estimated costs for the three models having different production levels are given in Tables 14-8, 14-9, and 14-10. Annual treatment costs as a function of production are shown graphically in Figure 14-7. Similarly, treatment costs per metric ton of product are given in Figure 14-8. Table 14-11 presents a summary of the unit cost distribution between amortization, and the operation and maintenance cost components at various production rates and levels of treatment. The costs shown at each level of treatment correspond to the model plant BPT (Level 1) system and higher level (2 or 3) systems which may add to or modify the existing BPT system to meet more stringent toxic pollutant removal requirements. The higher levels (2 and 3) also furnish a better effluent quality with respect to the conventional and nonconventional parameters. For model plants at the base level of treatment, amortization, chemicals and the residual waste disposal costs have a significant impact on the total annual costs. At treatment levels 2 and 3, amortization, chemicals and labor constitute a major portion of the additional annual costs.

14.7 BASIS FOR REGULATIONS

14.7.1 Evaluations of BPT Treatment Practices

All the plants producing titanium dioxide by the chloride process using rutile ore or upgraded ilmenite ore practice neutralization and settling for control and treatment of the waste effluents. A variation in the effluent quality is expected because of the method of handling the unreacted ore and coke (generated as solid residue from the chloride process). Two of the five plants haul the residue to a secure landfill for disposal while the remainder slurry the residue with water and send it to the treatment system. No information is available about recycling the treated waste water at any of the plants.

Pollutant Removal with BPT Treatment

Treatment Level 1 is equivalent to the proposed BPT in the TiO_2 subcategory (chloride process).

Plants #559 and #172 practice neutralization and settling of the raw waste. At Plant #559, the chloride process raw waste

TABLE 14-8. MODEL PLANT TREATMENT COSTS

Subcategory TITANIUM DIOXIDE-Chloride Process

Production 16,900 metric tons per year (18,632 tons per year)
48 metric tons per day (53 tons per day)
Waste water flow 1485 cubic meters per day.

	LEVEL OF TREATMENT*	
	FIRST	SECOND
A. INVESTMENT COST		
Construction.....	$368,500	$49,000
Equipment in place, including piping, fittings, electrical work and controls.....	209,000	389,000
Monitoring equipment in place.....	9,000	
Engineering design and inspection.....	117,300	87,600
Incidentals, overhead, fees, contingencies...	117,300	87,600
Land.....	192,000	6,000
TOTAL INVESTMENT COST	$1,013,100	$619,200
B. OPERATION AND MAINTENANCE COST		
Labor and supervision.	$56,000	$84,000
Energy.....	3,700	4,300
Chemicals.....	140,000	34,100
Maintenance.....	82,110	61,320
Taxes and insurance...	30,393	18,576
Residual waste disposal.....	108,000	9,000
Monitoring, analysis and reporting.....	15,000	7,500
TOTAL OPERATION AND MAINTENANCE COST	$435,203	$218,796
C. AMORTIZATION OF INVESTMENT COST	$133,592	$99,767
TOTAL ANNUAL COST	$568,795	$318,563

*First level represents the base cost of treatment system.
Other levels represent the incremental cost above base cost.

TABLE 14-9. MODEL PLANT TREATMENT COSTS

Subcategory TITANIUM DIOXIDE-Chloride Process

Production	25,500 metric tons per year	(28,113 tons per year)
	72 metric tons per day	(80 tons per day)
Waste water flow	2240 cubic meters per day.	

	LEVEL OF TREATMENT*	
	FIRST	SECOND
A. INVESTMENT COST		
Construction	$525,000	$50,800
Equipment in place, including piping, fittings, electrical work and controls.....	228,000	450,000
Monitoring equipment in place.....	9,000	
Engineering design and inspection.....	152,400	100,160
Incidentals, overhead, fees, contingencies...	152,400	100,160
Land.....	276,000	6,000
TOTAL INVESTMENT COST	$1,342,800	$707,120
B. OPERATION AND MAINTENANCE COST		
Labor and supervision.	$56,000	$84,000
Energy.....	4,000	5,500
Chemicals.....	211,000	51,000
Maintenance.....	106,680	70,112
Taxes and insurance...	40,284	21,213
Residual waste disposal.....	164,000	11,000
Monitoring, analysis and reporting.....	15,000	7,500
TOTAL OPERATION AND MAINTENANCE COST	$596,964	$250,325
C. AMORTIZATION OF INVESTMENT COST	$173,568	$114,072
TOTAL ANNUAL COST	$770,532	$364,397

*First level represents the base cost of treatment system.
Other levels represent the incremental cost above base cost.

TABLE 14-10. MODEL PLANT TREATMENT COSTS

Subcategory TITANIUM DIOXIDE-Chloride Process

Production	45,200 metric tons per year	(49,833 tons per year)
	129 metric tons per day	(142 tons per day)
Waste water flow	3980 cubic meters per day.	

	LEVEL OF TREATMENT*	
	FIRST	SECOND
A. INVESTMENT COST		
Construction	$815,500	$76,800
Equipment in place, including piping, fittings, electrical work and controls.....	283,000	590,000
Monitoring equipment in place.....	9,000	
Engineering design and inspection.....	221,500	133,360
Incidentals, overhead, fees, contingencies...	221,500	133,360
Land.....	504,000	6,000
TOTAL INVESTMENT COST	$2,054,500	$939,520
B. OPERATION AND MAINTENANCE COST		
Labor and supervision.	$56,000	$84,000
Energy.....	4,600	7,650
Chemicals.....	374,000	95,000
Maintenance.....	155,050	93,352
Taxes and insurance...	61,635	28,185
Residual waste disposal.....	294,000	20,000
Monitoring, analysis and reporting.....	15,000	7,500
TOTAL OPERATION AND MAINTENANCE COST	$960,285	$335,687
C. AMORTIZATION OF INVESTMENT COST	$252,266	$151,883
TOTAL ANNUAL COST	$1,212,551	$487,570

*First level represents the base cost of treatment system.
Other levels represent the incremental cost above base cost.

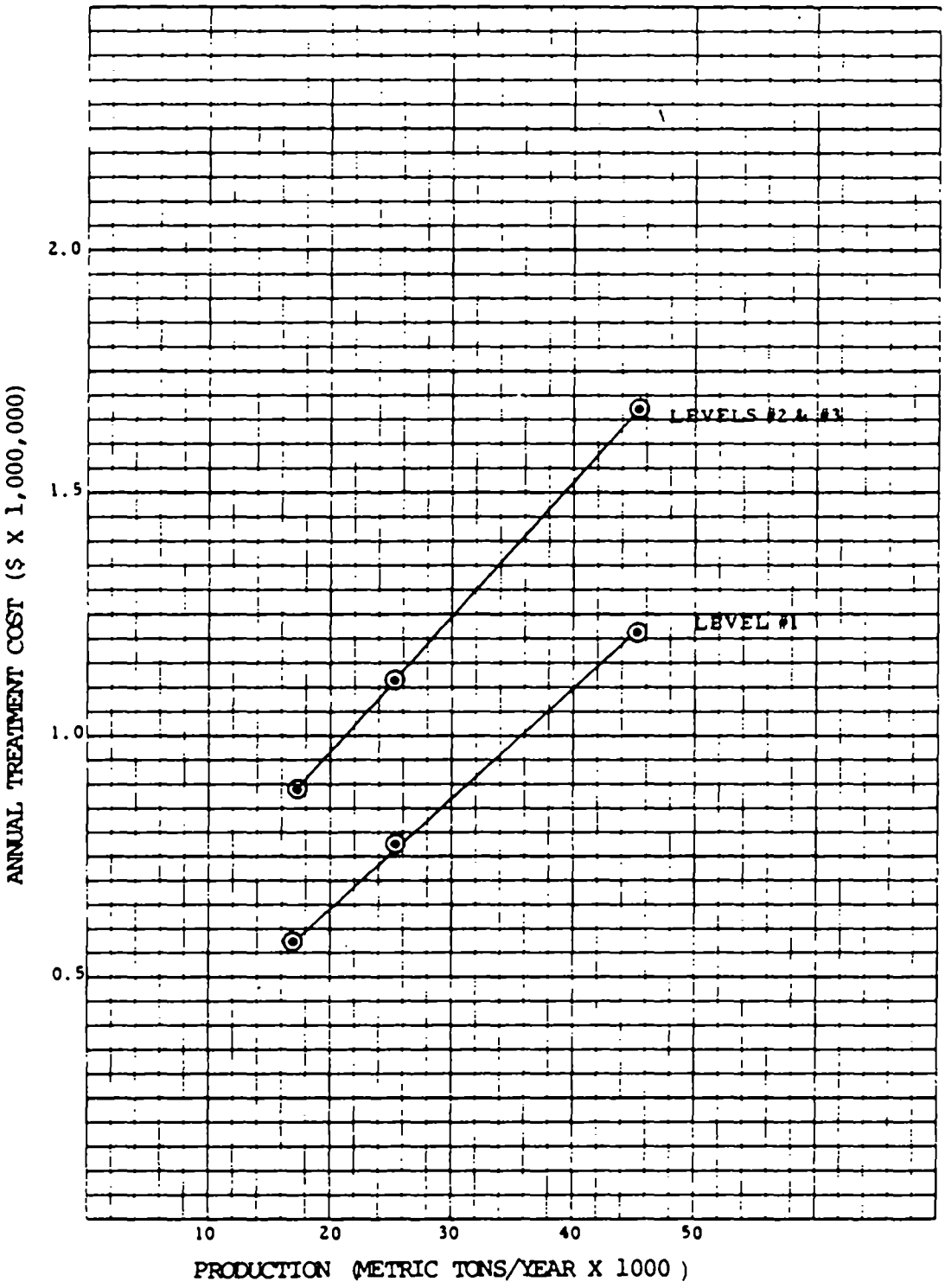

Figure 14-7. Annual treatment cost vs. production for the Titanium Dioxide Subcategory, Chloride Process

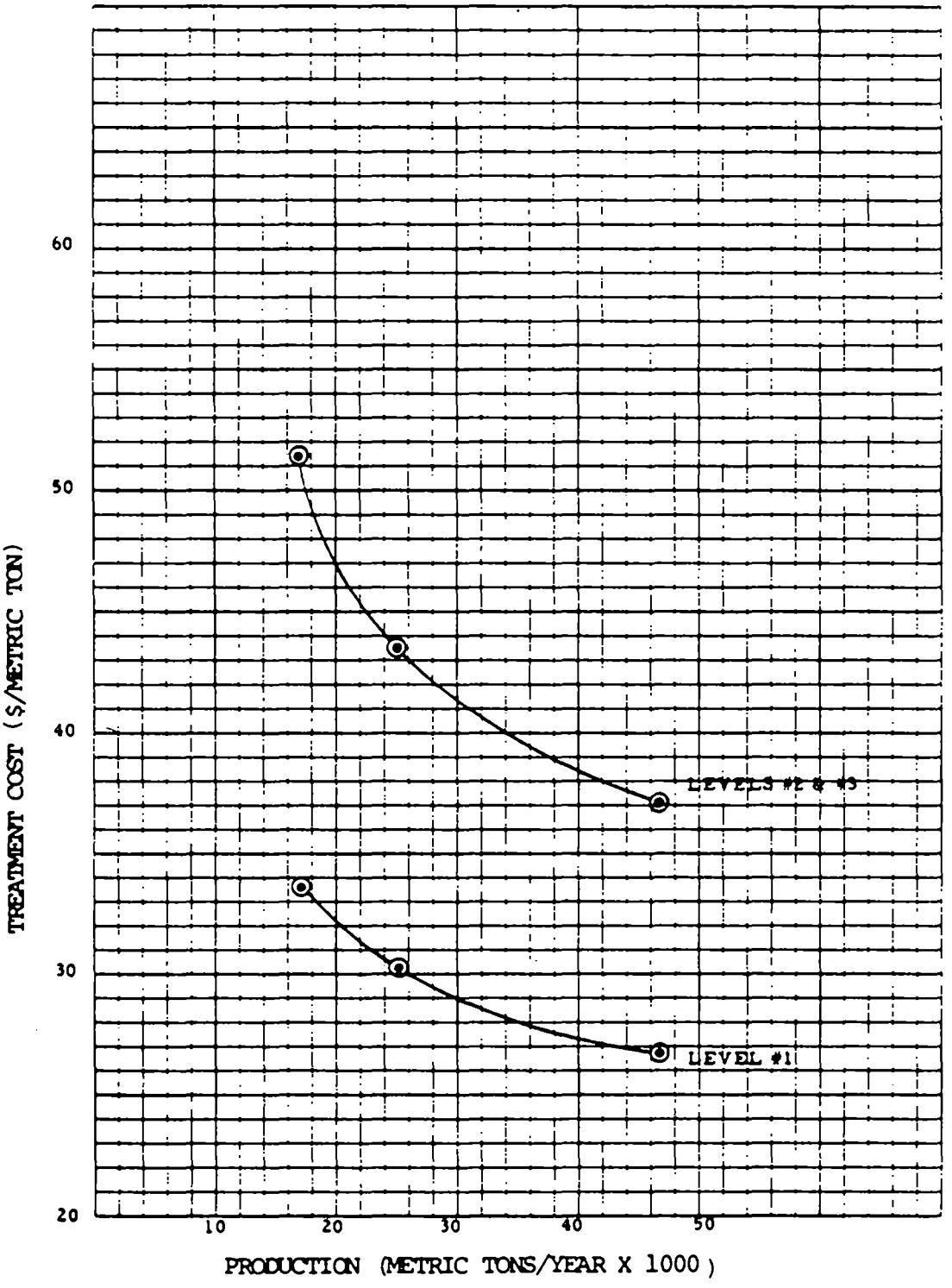

Figure 14-8. Annual unit treatment cost vs. production for the Titanium Dioxide Subcategory, Chloride Process

TABLE 14-11. MODEL PLANT TREATMENT COSTS

Subcategory TITANIUM DIOXIDE-Chloride Process

COST ITEM	PRODUCTION (kkg/yr)	FLOW (m3/day)	Annual Treatment Costs ($/kkg) LEVEL OF TREATMENT FIRST	SECOND	THIRD	FOURTH
Annual Operation and Maintenance	16,900	1,485	25.75	12.95	13.27	Not Applicable
	25,500	2,240	23.41	9.82	10.09	
	45,200	3,980	21.25	7.43	7.65	
Annual Amortization	16,900	1,485	7.90	5.90	6.07	
	25,500	2,240	6.81	4.47	4.60	
	45,200	3,980	5.58	3.36	3.47	
Total Cost	16,900	1,485	33.66	18.85	19.33	
	25,500	2,240	30.22	14.29	14.68	
	45,200	3,980	26.83	10.79	11.12	

water is mixed with the sulfate process waste water for treatment. Also at Plant #559, the spent ore and coke (solid residues from the chloride process) are slurried with water and sent to the treatment facility whereas at Plant #172, the solid residues are hauled to a chemical landfill. Long-term treated effluent data have been submitted by both Plants #559 and #172. The derivation of the variability factors for daily and 30-day averages for both plants are given in Tables 14-12 and 14-13.

The concentration of the raw waste and treated effluent along with the percent removal of the pollutants by the treatment system for Plants #559 and #172 sampled in the screening and verification program are given in Table 14-14.

14.7.2 Basis for Proposed BPT Effluent Limitations

Technology Basis

For BPT, the Agency is proposing limitations based on equalization, neutralization, and settling or clarification. All plants in this segment of the industry have BPT technology installed.

Flow Basis

The flow going to the treatment system at different plants varies and is dependent on the method of disposal of the spent ore and coke (pit solids) and on the finishing operation. The spent ore and coke are either hauled to a landfill as solid residue or sent to the treatment system. For the purpose of the model plant treatment system, the solid residues from the manufacturing process are assumed to be slurried with water and sent to the treatment system. Plants #559 and #199 do, in fact, send the solid residues to the treatment system. The model plant treatment system is based on an inflow rate of 100 m3/kkg of TiO2 which is an average value of the effluent flow of Plants #559 and #199. The treated effluent flow is assumed to be the same as the influent flow. The water added or removed in the treatment system through chemical addition, precipitation, and evaporation have been neglected, as it varies from plant to plant and is dependent on the selection of treatment chemicals as well as climatic conditions and is insignificant in comparison to the total flow.

Selection of Pollutants to be Regulated

The selection of pollutants for which regulations are being proposed was based on an evaluation of the waste data from the screening and verification sampling program. The two major factors considered were the individual plant raw waste concentrations and the total subcategory pollutant loadings.

TABLE 14-12. HISTORICAL EFFLUENT MONITORING DATA SUMMARY WITH VARIABILITY FACTOR

Daily Measurements

Subcategory: Titanium Dioxide

Chloride Process (Rutile Ore)

Plant #559

April 76 through September 78

	Pollutant						
	TSS	Cadmium	Chromium	Iron	Lead	Nickel	Zinc
Daily Data[1]							
No. of Points	889	109	128	854	128	128	128
Average $\bar{x}$, ppm	21	0.058	0.072	0.620	0.068	0.08	0.151
Standard Deviation, S	65.93	0.044	0.054	3.46	0.041	0.07	0.20
Standard Deviation, S'	1.54	0.68	0.67	1.86	0.56	0.76	1.02
Variability Factor	11.0	3.85	3.81	13.5	3.2	4.4	6.4
30-day[1] Averages							
No. of Points	30	26	30	28	30	30	30
Standard Deviation	21.84	0.042	0.038	0.94	0.04	0.05	0.155
Variability Factor	3.04	2.4	2.04	4.0	2.1	4.4	3.1
Variability[2] Factor Ratio							
VFR	3.6	1.6	1.9	3.4	1.5	1	2.1

(1) Section 8.2 presents a discussion of the approach and methodology employed in the statistical evaluation of data.

(2) VFR is the ratio of the variability factor for daily measurements to the variability factor for 30-day averages.

TABLE 14-13. HISTORICAL EFFLUENT MONITORING DATA SUMMARY WITH VARIABILITY FACTORS
DAILY MEASUREMENTS

SUBCATEGORY: TITANIUM DIOXIDE-Chloride Process
(Rutile/Upgraded Ilmenite Ore)

Plant #172

	Pollutant			
	TSS	Chromium	Copper	Zinc
Daily Data[1]				
No. of Points	454	454	454	454
Average $\bar{x}$, ppm	5.39	0.008	0.02	0.02
Standard deviation, S	9.13	0.016	0.03	0.027
Standard deviation, S'	1.16	1.27	1.08	1.02
Variability factor	7.6	8.6	6.9	6.4
30-Day Averages[1]				
No. of Points	15	15	15	15
Standard deviation, S	6.31	0.012	0.028	0.026
Variability factor	2.92	3.46	3.29	3.13
Variability Factor Ratio[2]				
VFR	2.6	2.5	2.1	2.1

(1) Section 8.2 presents a discussion of the approach and methodology employed in the statistical evaluation of data.

(2) VFR is the ratio of the variability factor for daily measurements to the variability factor for 30-day averages.

TABLE 14-14. TREATMENT PERFORMANCE DATA OF SAMPLED PLANTS #559 AND #172

SUBCATEGORY: TITANIUM DIOXIDE-Chloride Process

Pollutant	Plant #559			Plant #172		
	Pollutant Concentration (mg/l)		Percent Removal $C=\left(\frac{A-B}{A}\right)100$	Pollutant Concentration (mg/l)		Percent Removal $F=\left(\frac{D-E}{D}\right)100$
	A Raw Waste	B Treated Effluent		D Raw Waste	E Treated Effluent	
TSS	1103	23	97.9	171	6.7	96.1
Iron	288	4.4	98.5	2.9	0.33	88.6
Chromium	13.3	0.03	99.8	0.72	0.02	97.2
Lead	0.5	0.002	99.6	0.005	0.002	60
Nickel	0.5	0.005	99.0	0.08	0.01	87.5
Zinc	0.3	0.06	80.0	0.3	0.09	70.0

Raw waste concentration - Plant #559 was visited in the screening phase for sampling of the raw and treated waste water. For each pollutant, the maximum concentration observed gave a preliminary indication of its pollution potential. Five pollutants were found above treatability levels in the raw waste of Plant #559 and they were: chromium, iron, nickel, lead, and zinc (Section 14.3.3). A second plant, #172, was sampled in the verification phase and chromium was the only pollutant found above treatability levels in the raw waste. At Plant #559, the waste water from the chloride process is mixed with the sulfate process waste water and the chloride process effluents were sampled at the point of mixing. It is highly probable that the sampled waste included the sulfate process effluent impurities. The sulfate process for the manufacture of TiO_2 uses an ore of lesser purity. For this reason the nickel, lead, and zinc found are attributed to the sulfate process and are not further considered in this segment. The nonconventional and toxic pollutants of concern include chromium and iron. Iron, a nonconventional pollutant is significant because it is present as a major impurity in the rutile or upgraded ilmenite ore and was found at treatable levels in the Plant #559 raw waste.

Total subcategory raw waste pollutant loading - Chromium was the only toxic pollutant found in significant concentrations in the raw waste of both plants sampled in the screening and verification phase. The average unit raw waste chromium loading (Table 14-7) obtained from the plants sampled was multiplied by the total TiO_2 subcategory production by the chloride process to evaluate the overall magnitude of the pollutant potential for the subcategory. The value of 241,000 kg/year of chromium discharged by the subcategory in the effluent indicated the necessity of control of this pollutant.

The treatment technology practiced by the industry removes the chromium and iron to low levels as seen from the effluent quality of the plants sampled and shown in Table 14-14.

Basis of Pollutant Limitations

Conventional and nonconconventional parameters -

A. pH: The treated effluent is to be controlled within the range of 6.0 to 9.0. This limitation is based on the data presented in Appendix B of this report and the JRB Study (52).

B. TSS: Long-term effluent data is available for TSS for Plants #559 and #172. At Plant #172, the solid residues from the manufacturing process are sent to a landfill. Although the amount of solids sent to the treatment system at Plant #559 is high compared with that selected for the model plant (because of

intermixing of sulfate waste), the long-term average concentration of 21 mg/l (Table 14-12) calculated from the monitored data submitted by Plant #559 is selected as the treatment performance basis for the subcategory. The daily and the 30-day average variability factors (11 and 3.04) derived from the long-term data of Plant #559 and given in Table 14-12 are used to calculate the concentration basis. The proposed unit effluent limitations are calculated using the model plant unit flow of 100 m3/kkg. The calculations are given below:

Proposed 30-day average concentration

$$= (21 \text{ mg/l})(3.04) = 64 \text{ mg/l}$$

Proposed 24-hour maximum concentration

$$= (21 \text{ mg/l})(11) = 230 \text{ mg/l}$$

Proposed 30-day average effluent limit

$$= (64 \text{ mg/l})(100 \text{ m3/kkg})\left(\frac{\text{kg/m3}}{1000 \text{ mg/l}}\right)$$

$$= \frac{6.4 \text{ kg of TSS}}{\text{kkg of TiO2}}$$

Proposed 24-hour maximum effluent limit

$$= (230 \text{ mg/l})(100 \text{ m3/kkg})\left(\frac{\text{kg/m3}}{1000 \text{ mg/l}}\right)$$

$$= \frac{23 \text{ kg of TSS}}{\text{kkg of TiO2}}$$

C. Iron: The subcategory performance standard of 0.62 mg/l selected for iron is based on the long-term average of the effluent data submitted by Plant #559 (Table 14-12).

For the model plant, it is assumed that iron is present in the ferric state in the raw waste from the chlorination process. Using the daily variability factor of 4.0 and the 30-day average variability factor of 13.5 estimated from the long-term monitored effluent data of Plant #559 for iron (Table 14-12), and the model plant unit flow of 100 m3/kkg, the proposed concentration basis and effluent limitations are determined as shown below.

Proposed 30-day average concentration basis is:

$$(0.62 \text{ mg/l})(4.0) = 2.5 \text{ mg/l}$$

Proposed 24-hour maximum concentration basis is:

$$(0.62\ mg/l)(13.5) = 8.4\ mg/l$$

Proposed 30-day average effluent limit is:

$$(2.5\ mg/l)(100\ m3/kkg)\left(\frac{m3/kkg}{1000\ mg/l}\right)$$

$$= \frac{0.25\ kg\ of\ iron}{kkg\ of\ TiO2}$$

The proposed daily maximum effluent limit is:

$$(8.4\ mg/l)(100\ m3/kkg)\left(\frac{m3/kkg}{1000\ mg/l}\right) = \frac{0.84\ kg\ of\ iron}{kkg\ of\ TiO2}$$

The proposed maximum 30-day average concentration of 2.5 mg/l is higher than the achievable effluent concentration of 1.6 mg/l reported in the literature (10). The latter concentration is based on the performance of lime neutralization followed by settling of acid mine drainage waste, and may not be appropriate for this subcategory.

Toxic pollutants - Chromium is the only regulated toxic pollutant because of its presence in the raw waste of the plants surveyed at treatability levels.

A. Chromium: The proposed chromium limitations are based on the long-term data of the treated effluent of Plant #559. The influent to the treatment system at Plant #559 contains significant amounts of chromium because of the intermixing of sulfate process waste. The long-term average of 0.07 mg/l derived from the monitored data of the treated effluent of Plant #559 (Table 14-12) is taken as the proposed subcategory performance concentration. The daily variability factor of 2.0 and 30-day variability factor of 3.8 estimated from the long-term data of Plant #559 (Table 14-12) and the model plant effluent flow of 100 m3/kkg of TiO2 are used to derive the proposed concentration basis and effluent limitations. The calculations are shown below.

The proposed 30-day average concentration basis is:

$$(0.07\ mg/l)(2.0) = 0.14\ mg/l$$

The proposed daily maximum concentration basis is:

$$(0.07\ mg/l)(3.8) = 0.27\ mg/l$$

The proposed 30-day average effluent limit is:

$$(0.14\ mg/l)(100\ m3/kkg)\left(\frac{kg/m3}{1000\ mg/l}\right)$$

$$= \frac{0.014\ kg\ of\ chromium}{kkg\ of\ TiO2}$$

The proposed daily maximum effluent limit is:

$$(0.27\ mg/l)(100\ m3/kkg)\left(\frac{kg/m3}{1000\ mg/l}\right) = \frac{0.027\ kg\ of\ chromium}{kkg\ of\ TiO2}$$

B. Other metals: Lead, nickel, and zinc were found in the raw waste of Plant #559 in the treatability range. They were not found in the raw waste of Plant #172. Plant #559 intermixes the chloride and sulfate process waste before treatment. The presence of these pollutants in the raw waste at Plant #559 might result from the sulfate process waste. The limitations for the three pollutants are given and are intended to serve as guidelines in cases where the pollutants are found to be of serious concern.

The selected 30-day concentration basis for lead, nickel, and zinc are based on the lower treatability limits achieved by the lime precipitation and settling of metal contaminated waste (Table 8-11) and the values are:

Lead = 0.3 mg/l
Nickel = 0.2 mg/l
Zinc = 0.5 mg/l

The variability factor ratio of 1.9 for chromium estimated from the long-term data of Plant #559 (Table 14-12) is used to obtain the daily maximum proposed limits for lead, nickel, and zinc. This variability factor ratio was used because precipitation of chromium is similar in performance to precipitation of other metals. Calculations are as follows:

The proposed 24-hour maximum concentration basis for lead is:

$$(0.30\ mg/l)(1.9) = 0.60\ mg/l$$

The proposed 24-hour maximum concentration basis for nickel is:

$$(0.20\ mg/l)(1.9) = 0.40\ mg/l$$

The proposed 24-hour maximum concentration basis for zinc is:

$$(0.50\ mg/l)(1.9) = 1.0\ mg/l$$

The proposed limitations for BPT are given in Table 14-15.

14.7.3 Basis for Proposed BCT Effluent Limitations

The BCT limitation (applicable only to TSS) was set equal to BPT because BAT is equal to BPT.

14.7.4 Basis for Proposed BAT Effluent Limitations

The Application of Advanced Level Treatment

The advanced level technologies, viz., the use of sulfide and xanthate as a polishing step to the base level treatment system (BPT), were considered for BAT and NSPS but were rejected on the basis of cost (Level 3 Table 14-11). Level 1, used for BPT, is selected for BAT treatment technology.

Technology Basis

Alkaline precipitation followed by settling used for BPT (Level 1) is proposed for BAT.

Flow Basis

A unit waste water flow rate of 100 m3/kkg of TiO2 used for the BPT model plants has been selected for BAT.

Selection of Pollutants to be Regulated

Chromium and iron are the two pollutants identified for regulation.

Nonconventional pollutants -

The proposed iron limitations are the same as those selected for BPT.

Toxic pollutants -

A. Chromium: The limitations proposed for BAT are selected for BPT.

B. Other metals: Concentration limits for lead, nickel, and zinc are not proposed as limitations. However, they are contained in this document for use if these pollutants are found to be of concern. The values are the same as those selected for BPT.

Table 14-16 gives the proposed limitations for BAT.

TABLE 14-15. PROPOSED LIMITATIONS
TITANIUM DIOXIDE - CHLORIDE PROCESS (RUTILE OR UPGRADED ILMENITE ORE)

Best Practicable Control Technology Currently Available
Waste Water Flow: 100 m3/kkg of TiO_2

Pollutant:	Subcategory Performance (mg/l)	VFR(1)	Concentration Basis (mg/l) Max 30-day Avg	Concentration Basis (mg/l) 24-hr Max	Effluent Limit (kg/kkg of TiO2) Max 30-day Avg	Effluent Limit (kg/kkg of TiO2) 24-hr Max
Conventional and Non Conventional Pollutants:						
Total Suspended Solids	21 (2)	3.6	64	230	6.4	23
Iron	0.62(2)	3.4	2.5	8.4	0.25	0.84
Toxic Pollutants:						
Chromium	0.070(2)	1.9	0.14	0.27	0.014	0.027
Lead	0.30(3)	1.9	0.30	0.60	_ (4)	_ (4)
Nickel	0.20(3)	1.9	0.20	0.40	_ (4)	_ (4)
Zinc	0.50(3)	1.9	0.50	1.0	_ (4)	_ (4)

(1) VFR: Ratio of the 24-hour variability factor to the 30-day variability factor.

(2) Long term average based on loading data and variability factors of plant #559 selected from Table 14-11.

(3) The lower limit of the literature treatability estimate (Table 8-11) is used as the basis of or the 30-day average limitation.

(4) No effluent limitation proposed.

TABLE 14-16. PROPOSED LIMITATIONS
TITANIUM DIOXIDE - CHLORIDE PROCESS (RUTILE/UPGRADED ILMENITE ORE)

Best Available Technology
Waste Water Flow: 100 m3/kkg of TiO_2

Pollutant	Subcategory Performance(1)	VFR(2)	Concentration Basis (mg/l)		Effluent Limit (kg/kkg of TiO_2)	
			30-day Avg	24-hour Max	30-day Avg	24-hour Max
Nonconventional Pollutants:						
Iron(4)	0.62	3.4	2.5	8.4	0.25	0.84
Toxic Pollutants:						
Chromium(5)	0.070	1.9	0.14	0.27	0.014	0.027
Lead	0.30	1.9	0.30	0.60	___(3)	___(3)
Nickel	0.20	1.9	0.20	0.40	___(3)	___(3)
Zinc	0.50	1.9	0.50	1.0	___(3)	___(3)

(1) See Table 14-14 for details.

(2) VFR: Ratio of the 24-hour variability factor to the 30-day variability factor.

(3) No effluent limitation proposed.

(4) Limitations are applicable for PSES.

14.7.5 Basis for Proposed New Source Performance Standards

Application of Advanced Level Treatment

The concentration of conventional, nonconventional, and toxic pollutants can be reduced by filtering the clarified effluent from BPT in a dual media filter.

Technology Basis

For new plants, the recommended waste water treatment technology is lime neutralization and precipitation, settling, and dual media filtration (equivalent to Level 2). All the existing chloride process plants using rutile/upgraded ilmenite ore currently practice lime neutralization and settling, but only published treatability data is available on the performance of dual media filters.

Flow Basis

The raw effluent flow rate is the same as that used for BAT, namely 100 m3/kkg of TiO2. It is assumed that the unreacted ore and coke are slurried with water and sent to the treatment system. The selected flow value is an average of the unit effluent flow rate of two plants (#559 and #199) practicing this method of solids disposal.

Selection of Pollutants to be Regulated

It is proposed that the pollutants regulated for BPT are also regulated for NSPS. The pollutant parameters of concern are pH, TSS, iron, and chromium. Concentration limits are provided for lead, nickel, and zinc in cases where these pollutants become of concern.

Conventional parameters -

A. pH: For NSPS, the BPT limitation is retained. Control of the final effluent within the range of pH 6.0 to 9.0 is required on the basis of data presented in Appendix B of this report and the JRB Study (52).

B. TSS: There are no in-plant performance data available on the filtration of treated and clarified NSPS waste water, so a 30 percent additional removal is assumed. This assumption is based on treatability studies (41) using filtration. This reduction is applied to the selected BAT (or BPT) maximum 30-day average of 64 mg/l. The proposed maximum 30-day average concentration basis is then given by: 64 mg/l (1.00 - 0.30) = 45 mg/l. Likewise, the proposed 24-hour maximum concentrations and unit effluent limitations are obtained from the BAT limitations (Table 14-15) as shown below.

The proposed 24-hour maximum concentration is:

$$(230\ mg/l)(0.70) = 160\ mg/l$$

The proposed 30-day average effluent limit is:

$$(6.4\ kg/kkg)(0.70) = \frac{4.5\ kg\ of\ TSS}{kkg\ of\ TiO2}$$

The proposed 24-hour maximum effluent limit is:

$$(23\ kg/kkg)(0.70) = \frac{16\ kg\ of\ TSS}{kkg\ of\ TiO2}$$

Nonconventional pollutants -

A. Iron: No in-plant performance data is available on the effect of dual media filtration on the removal of iron from the lime treated and clarified waste water. The removal efficiency of 30 percent obtained for TSS from the treatability studies (41) is assumed also to apply to iron, since the iron is present as a floc. The proposed concentration basis and effluent limitation for NSPS are obtained by multiplying the selected BAT (or BPT) limitations (Table 14-15) by 0.70 as follows:

The proposed 30-day average concentration basis is:

$$(2.5\ mg/l)(0.70) = 1.8\ mg/l$$

The proposed 24-hour maximum concentration basis is:

$$(8.4\ mg/l)(0.70) = 5.9\ mg/l$$

The proposed 30-day average effluent limit is:

$$(0.25\ kg/kkg)(0.70) = \frac{0.18\ kg\ of\ iron}{kkg\ of\ TiO2}$$

The proposed 24-hour maximum effluent limit is:

$$(0.84\ kg/kkg)(0.70) = \frac{0.59\ kg\ of\ iron}{kkg\ of\ TiO2}$$

Toxic pollutants -

A. Chromium: For NSPS, the Agency is proposing more stringent controls on the discharge of chromium. There is no directly applicable data on filter performance in the TiO2 (chloride process) industry. Therefore, the proposed limitations are based on literature treatability studies (40,41). In pilot scale treatability tests, raw municipal waste

water samples were spiked with toxic metals, treated with lime and settled. This was followed by dual media filtration of the clarified effluent. For chromium, an additional removal of 60 percent was obtained by filtration. This reduction factor is assumed to be applicable. The proposed limitations for NSPS are obtained by multiplying the respective BAT (or BPT) limitations (Table 14-16) by 0.40 as follows:

The proposed maximum 30-day concentration basis is:

$$(0.14 \text{ mg/l})(0.40) = 0.060 \text{ mg/l}$$

The proposed daily maximum concentration basis is:

$$(0.30 \text{ mg/l})(0.40) = 0.10 \text{ mg/l}$$

The proposed 30-day average effluent limit is:

$$(0.014 \text{ kg/kkg})(0.40) = \frac{0.0060 \text{ kg of chromium}}{\text{kkg of } TiO_2}$$

The proposed maximum daily effluent limit is:

$$(0.030 \text{ kg/kkg})(0.40) = \frac{0.010 \text{ kg of chromium}}{\text{kkg of } TiO_2}$$

B. Other metals: Treatability studies have indicated that the following increased removals of lead, nickel, and zinc can be achieved by filtration (40,41).

	Additional Removal by Filtration Using Settled Effluent (%)
Lead	60
Nickel	14
Zinc	6

The additional levels of removal are applied to the corresponding BAT (or BPT) concentration for the above metals to get the NSPS concentrations.

The proposed 30-day average lead concentration basis is:

$$(0.30 \text{ mg/l})(0.40) = 0.12 \text{ mg/l}$$

The proposed 24-hour lead concentration basis is:

$$(0.60 \text{ mg/l})(0.40) = 0.24 \text{ mg/l}$$

The proposed 30-day average nickel concentration basis is:

$$(0.20 \text{ mg/l})(0.86) = 0.17 \text{ mg/l}$$

The proposed 24-hour maximum concentration basis for nickel is:

$$(0.40 \text{ mg/l})(0.86) = 0.34 \text{ mg/l}$$

The proposed 30-day average concentration basis for zinc is:

$$(0.50 \text{ mg/l})(0.94) = 0.47 \text{ mg/l}$$

The proposed 24-hour maximum concentration basis for zinc is:

$$(1.0 \text{ mg/l})(0.94) = 0.94 \text{ mg/l}$$

The proposed conventional, nonconventional, and toxic pollutant limitations for NSPS are given in Table 14-17.

14.7.6 Basis for Pretreatment Standards

Existing Sources

For Pretreatment Standards for Existing Sources (PSES), the Agency is proposing limitations based on BAT. The pollutants to be limited are iron and chromium (see Table 14-15).

New Sources

For Pretreatment Standards for New Sources (PSNS), the Agency is proposing limitations based on NSPS. The pollutants to be regulated are iron and chromium (see Table 14-17).

TABLE 14-17. PROPOSED LIMITATIONS
TITANIUM DIOXIDE - CHLORIDE PROCESS

New Source Performance Standards
Waste Water Flow: 100 m3/kkg of TiO_2

Pollutant	Treatability	VFR[1]	Concentration Basis, (mg/l) Max 30-day Avg	Concentration Basis, (mg/l) 24-hour Max	Effluent Limit (kg/kkg of TiO_2) Max 30-day Avg	Effluent Limit (kg/kkg of TiO_2) 24-hour Max
Conventional and Nonconventional Pollutants :						
Total Suspended Solids	15	3.6	45	160	4.5	16
Iron[2]	0.40	3.4	1.8	5.9	0.18	0.59
Toxic Pollutants:						
Chromium[2]	0.030	1.9	0.060	0.12	0.0060	0.012
Lead	0.060	1.9	0.12	0.24	—[3]	—[3]
Nickel	0.17	1.9	0.17	0.34	—[3]	—[3]
Zinc	0.47	1.9	0.47	0.94	—[3]	—[3]

(1) VFR: Ratio of 24-hour variability factor to the 30-day variability factor.

(2) Also applicable for PSNS limitations.

(3) No effluent limitations proposed.

14.8 TITANIUM DIOXIDE - SULFATE PROCESS INDUSTRY PROFILE

14.8.1 General Description

The industrial profile for the Sulfate Process Segment of the Titanium Dioxide Subcategory is presented in Table 14-18 and the status of regulations is shown in Table 14-2.

14.8.2 General Process Description and Raw Materials

Sulfate Process - General Description

Among the various titanium ores, ilmenite is available in abundance. Ilmenite is a low-grade titanium ore with a TiO_2 content varying from 45 to 60 percent. Ilmenite ore and slag from iron production generally comprise the raw materials used for the preparation of titanium dioxide by the sulfate process. Large amounts of water and sulfuric acid are used in this process, and the majority of the plants are co-located with sulfuric acid plants. Table 14-19 gives the analysis of various ilmenite ores. The preparation of TiO_2 by the sulfate process utilizes three important steps:

1. Digestion: $FeO.TiO_2 + 2H_2SO_4 = FeSO_4 + TiO.SO_4 + 2H_2O$

2. Precipitation: $TiO.SO_4 + 2H_2O = TiO_2.H_2O + H_2SO_4$

3. Calcination: $TiO_2.H_2O = TiO_2 + H_2O$

The ore is dried, ground, and then reacted with sulfuric acid. The reaction takes place at 160 degrees C and the reacted mixture consists of titanyl, ferrous, and ferric sulfates. The product is dissolved in water. The total iron in the reacted product is kept in the ferrous state by the addition of scrap iron. After the reduction, the product is dissolved in water and clarified with the aid of flocculating agents to remove insoluble impurities such as silicon, zirconium, and unreacted ore. The iron is removed from the clear solution by cooling the solution to 10 degrees C when $FeSO_4.7H_2O$ crystallizes. The ferrous sulfate crystals, commercial copperas, are mechanically separated from the solution by filtration or centrifugation. The concentrated titanyl sulfate solution is diluted with water and heated to form titanium dioxide hydrate, which is known as strong acid, is separated and either discharged or recycled. The $TiO_2.H_2O$ filter residue is slurried with water and conditioning agents are added to control particle size, color, dispersibility, and photochemical stability. The conditioning agents include potassium, zinc, antimony, and calcium compounds, and phosphate salts. The solution is filtered and the filtrate

TABLE 14-18. - SUBCATEGORY PROFILE DATA SUMMARY

SUBCATEGORY	TITANIUM DIOXIDE SULFATE PROCESS
Total subcategory capacity rate	401,000 kkg/year
Total subcateogry production rate	259,000 kkg/year
Number of plants in this subcategory	4
308 Data on file for	5
With total capacity of	320,000 kkg/year
With total production of	246,000 kkg/year
Representing capacity	80 percent
Representing production	95 percent
Plant production range:	
Minimum	31,000 kkg/year
Maximum	74,500 kkg/year
Average production	49,000 kkg/year
Median production	43,000 kkg/year
Average capacity utilization	76 percent
Plant age range:	
Minimum	23 years
Maximum	54 years
Waste water flow range:	
Minimum	35,000 cubic meters/day
Maximum	125,000 cubic meters/day
Volume per unit product	
Minimum	300 cubic meters/kkg
Maximum	780 cubic meters/kkg

Sources of data are Stanford Research Institute, Directory of Chemical Producers, U.S.A., 1977, U.S. Department of Commerce, Current Industrial Reports, December 1977; Energy and Environmental Analysis, Inc.; Draft Report, "Preliminary Economic Assessment of Effluent Limitations in the Inorganic Chemical Industry," June, 1978 and "Economic Analysis of Proposed Revised Effluent Guidelines and Standards for the Inorganic Chemicals Industry," March, 1980.

TABLE 14-19. ANALYSIS OF ILMENITE ORES[1]

Chemical Constituent	UNITED STATES					CANADA		
	Virginia							
	Piney River	Roseland	New York	Florida	California	Ivry	Bourget	Allard
TiO_2	44.3	51.4	44.4	64.1	48.2	42.5	22.4	37.3
FeO	35.9	37.9	36.7	4.7	39.1	39.1	36.9	26.3
Fe_2O_3	13.8	1.6	4.4	25.6	10.4	20.7	31.2	30.0
SiO_2	2.0	4.6	3.2	0.3	1.4	0.88	1.0	NA
Al_2O_3	1.21	0.55	0.19	1.5	0.2	1.05	6.01	NA
P_2O_5	1.01	0.17	0.07	0.21	NA	NA	0.93	0.004
ZrO_2	0.55	NA	0.006	NA	0.05	NA	NA	NA
MgO	0.07	2.35	0.80	0.35	0.6	2.0	1.50	NA
MnO	0.52	0.70	0.35	1.35	0.1	0.04	NA	0.10
CaO	0.15	0.59	1.0	0.13	0.1	0.1	0.55	NA
V_2O_5	0.16	0.07	0.24	0.13	0.05	0.36	NA	0.39
Cr_2O_3	0.27	NA	0.001	0.1	0.03	0.15	NA	NA

[1]Constituents expressed as weight percent.

NA: Not Available

is known as weak acid. Residual acids and iron originally present in the precipitate are removed with the water of hydration by calcination. The resulting TiO_2 pigment is sent to finishing operations, which vary according to the end product requirement and application. The wet finishing operations may include some, or all, of the following steps: repulping, milling, surface treatment with proprietary agents in solution, washing, and drying. The alternative dry finishing operations may include one or more milling steps followed by packaging. A simplified block diagram of the sulfate process is shown in Figure 14-9.

14.9 WATER USE AND WASTE SOURCE CHARACTERISTICS

14.9.1 Water Use

Water is used in the preparation of titanium dioxide by the sulfate process for noncontact cooling, air emission control, and for process reactions. In the process, water is used to leach the soluble sulfate salts from the reaction mass and to convert the titanyl sulfate to titanium dioxide hydrate. Water is also used to wash the titanium dioxide hydrate precipitate free from residual acid and iron. Water is used for air emission control during the drying of ore, on digester units, and for the cleaning of the kiln gases before they are vented to the atmosphere. In the digester unit, water seals are used to maintain a vacuum on the digester units. Large amounts of water are also used in the finishing operations. Table 14-20 is a summary of water usage in the titanium dioxide subcategory using the sulfate process.

14.9.2 Waste Sources

Digester Sludge

After the digestion of the ore in sulfuric acid, the resulting sulfates are dissolved in water and the insoluble impurities are removed in a clarifier or filter. These include silica, alumina, sulfuric acid, and unreacted iron. The quality of this waste varies and depends on the type and quality of ore used. Data on the quantity of this waste indicates that approximately 210 kg/kkg is produced.

Copperas

The recovered ferrous sulfate is marketed or disposed of as a solid waste. The amount of copperas generated is about 950 kg/kkg of TiO_2. The copperas generally contain small amounts of adsorbed sulfuric acid.

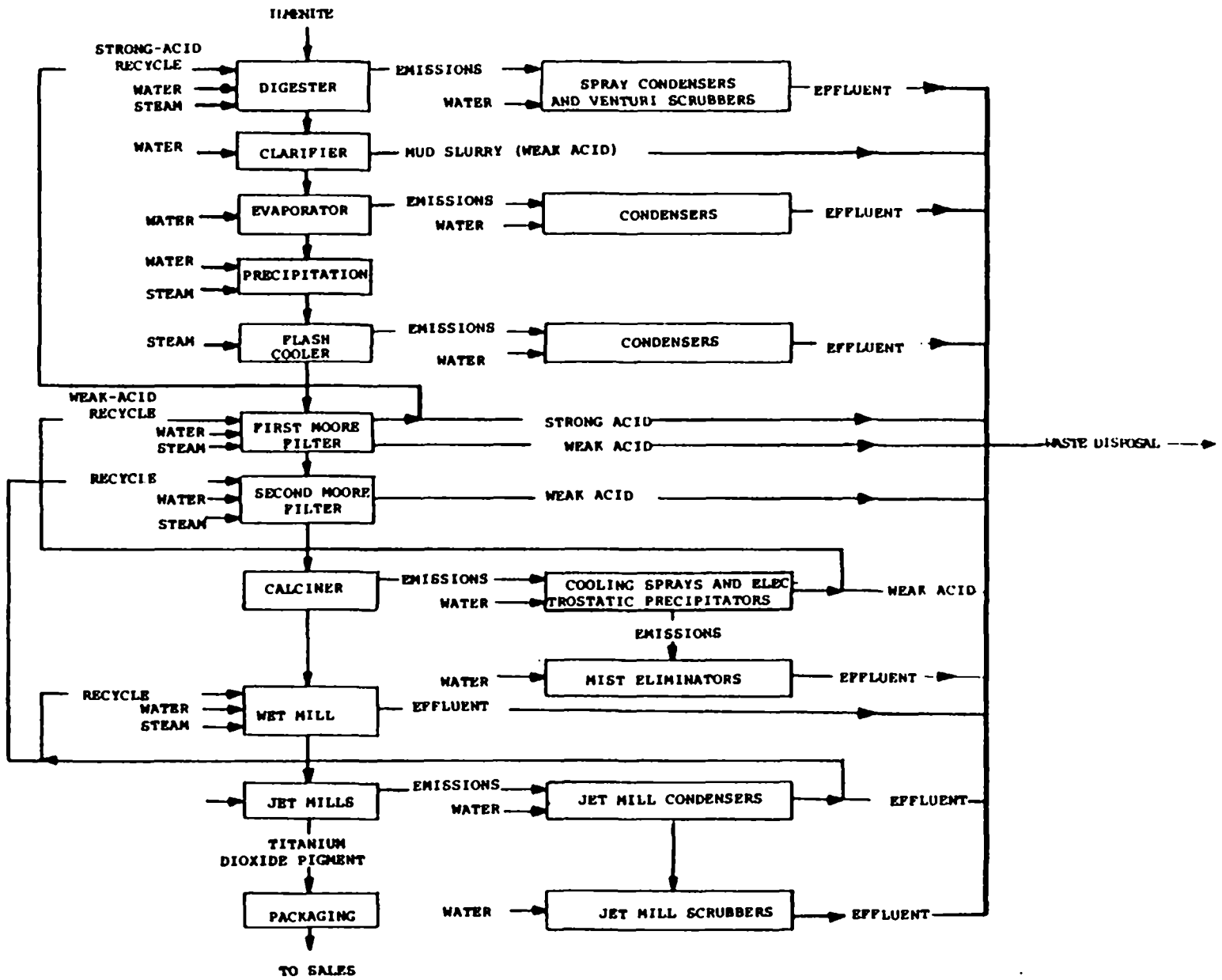

Figure 14-9. General process flow diagram for production of titanium dioxide by

TABLE 14-20. WATER USAGE IN TITANIUM DIOXIDE - SULFATE PROCESS SUBCATEGORY

Uses	Water Usage per Unit of Production (m^3/kkg of TiO_2)		
	Plant #555	Plant #694	Plant #696
Noncontact cooling	47.8	408	149
Direct process contact	390	588	297
Indirect process contact (pumps, seals, leaks, spills, etc.)	6	1.6	4
Maintenance, equipment cleaning and work area washdown	3	1.8	4
Air pollution control	258	78	81
Noncontact ancillary uses (boilers, utilities, etc.)	36	33	NA

NA: Not Available

Strong Acid Waste

When water is added to titanyl sulfate solution after the removal of copperas, sulfuric acid and the hydrate of titanium dixoide are formed. The acid contained in solution is removed by filtration and the filtrate is known as strong acid solution. The concentration of sulfuric acid varies from 15 to 30 percent as H_2SO_4. In addition to sulfuric acid, the waste stream contains ferrous sulfate, titania, antimony, and other heavy metal salts. A part of the acid is returned to the process and the rest sent to the treatment facility.

Weak Acid Waste Stream

The waste generated from washing the titanium dioxide hydrate precipitate is known as weak acid. The concentration of sulfuric acid in this waste varies from two to four percent as H_2SO_4 and contains various impurities, including iron sulfate, titania, antimony, and other heavy metal salts. It also includes, in some cases, the conditioning agents added to the precipitate prior to washing, to control and improve the quality of the final product. The weak acid may also include the kiln exhaust scrubber waste.

Scrubber Wastes

Scrubber waste water results from the scrubbing of vapors emitted during the drying of the ore, during digestion, and during kiln drying. The amount of waste water generated depends on the amount of water used and type of emission controls practiced. The scrubber water contains titanium dioxide particulate, acid mist, sulfur trioxide and sulfur dioxide. Of all the waste produced from titanium dioxide-sulfate process manufacture subcategory, the scrubber waste water constitutes the major portion.

Wet Milling Waste

These wastes are generated during wet finishing of the titanium dioxide pigment. Wet milling is used to produce pigment particles of the desired size and surface character and requires steam and water for repulping the pigment. Caustic soda is also used to remove any residual acidity from the titanium dioxide pigment during the finishing operation. The waste water from wet finishing operation, therefore, contains titania, sodium sulfate, and other agents added to improve or achieve desired properties in the final product.

14.10 DESCRIPTION OF PLANTS

14.10.1 Screening

Plant #555 was visited and its waste streams sampled in the screening phase by an EPA Region II team. The pigment manufacturing operation utilizes a titania slag for the production of TiO_2 by the sulfate process. After digestion of the slag in sulfuric acid the residual gangue material is filtered out and the clear liquor is concentrated by evaporation. The crude pigment is formed by hydrolysis with water and steam and processed to form both anatase and rutile type pigment products. Table 14-21 presents raw waste flows and pollutant characteristics for Plant #555.

Waste water samples were collected at five points and analyzed for the conventional, nonconventional, and toxic pollutants. These sampling points were designated as 1) the digestion suppression flume containing waste water from direct contact air scrubbers on the digesters, 2) the black end flume containing wastes from major cuttings, filter sludges, acid filtrates, and evaporator and condenser waters, 3) the white end flume carrying finishing process filtrates, noncontact cooling water, and sanitary wastes, 4) northside jet air scrubbers, and 5) southside jet air scrubbers.

At present , all of the process waste streams are collected in a settling basin which is open to tidal fluctuations that provide diurnal flushing of the effluent into the receiving waters.

14.10.2 Verification

Plant #559 was surveyed in both the screening phase and verification phase of the study. At this plant the strong acid is sent to a lined holding pond for equalization. Effluent from the pond is neutralized with ground calcium carbonate limestone in a reactor. A minimum amount is added to raise the pH to a level such that calcium sulfate, but not ferrous hydroxide, is precipitated. The CO_2 formed during the reaction is vented to the atmosphere and the calcium sulfate slurry goes to a clarifier. The underflow from the clarifier is filtered to produce pure gypsum crystals at a concentration of 70 to 80 percent.

The weak acid is sent to a settling pond, where it is combined with a small quantity of other wastes. The effluent from the weak acid pond is mixed with the calcium sulfate clarifier overflow and neutralized with ground calcium carbonate in a three-stage reactor. Pebble and slaked lime are also added

TABLE 14-21. RAW WASTE CHARACTERISTICS (INDUSTRY DATA)[1] FOR PLANT #555 (PRODUCTION OF TiO_2 BY SULFATE PROCESS)

Waste Source	Unit Flow (m^3/kkg of TiO_2)	pH*	Pollutant Waste Loads, (kg/kkg of TiO_2) Acidity (as H_2SO_4)	NH_3 (as N)	Fe	TSS	TDS
Digestion	115	3.0	20.8	NA	0.042	9.3	35.7
Clarification	3.58	2.5	26.7	NA	8.42	175	40.8
Evaporation	113	4.0	18.7	NA	1.14	3.2	20.2
Cooling	20	6.1	2.49	NA	0.099	0.46	3.09
Strong Acid from first Moore Filtration	8.49	< 0.5	2.360	NA	139	0.959	2.815
Weak Acid from first Moore Filtration	12.2	2.0	88.3	NA	3.8	0.23	98.8
Weak Acid from second Moore Filtration	10.4	1.7	148	NA	0.29	0.13	151
Weak Acid from first stage Calcination	12.0	2.0	20.8	NA	0.22	2.0	7.50
Weak Acid from second stage Calcination	40.0	2.2	19.2	NA	0.64	4.92	33.1
Calcination Mist Eliminators	38.7	3.0	7.50	NA	0.02	0.21	27.9
Wet Milling Washing and Drying	11.1	8.0	NA	8.6	0.01	2.13	11.0
Jet-Mill Condenser	27.0	6.5	NA	NA	0.01	1.1	2.7
Jet-Mill Scrubbers	18.0	7.4	NA	NA	0.13	1.7	3.58
Boiler and Water Plants	16.6	9.0	NA	NA	0.66	5.25	8.92

NA: Not Available

* Value in pH units

(1) - Response to 308 Questionnaire, 1976

to raise the pH and precipitate more calcium sulfate. Air is also introduced to convert the ferrous iron to ferric. The effluent from the reactor goes to another clarifier, and the clarifier underflow is filtered to concentrate the solids to 70 percent. The overflow from the second clarifier is mixed with the other process waste waters. These include the scrubber, finishing, and cooling waste waters. The combined water is neutralized with slaked lime before it is sent to a final settling pond, the effluent from which is discharged. Figure 14-10 gives the flow diagram of the treatment process and shows the sampling locations for both screening and verification. Table 14-22 gives the flow data for the waste streams and conventional and nonconventional pollutant emissions.

14.10.3 Other Plant Descriptions

At Plant #694, the clarification sludge which contains the unreacted ore is sent to waste disposal. The weak acid effluent from the plant is neutralized with slaked lime and the grit is settled out for landfill disposal. After the separation of grit, the aqueous stream is discharged to a municipal treatment system. The other wastes, together with runoff from the plant site, are collected, and sent to a lagoon for solids removal, and the overflow discharges to a river.

At Plant #696, the raw wastes are sent to thickeners to remove the suspended solids and the overflow is discharged. Depending on the titanium content, the underflow from the thickeners is either recycled or disposed of in a landfill. This plant has discontinued operations.

At Plant #605, the process raw waste streams are combined and sent to a reactor for neutralization with a water slurry of finely ground calcium carbonate. The effluent from the reactor is hydrocycloned into three fractions. The first fraction, which is the coarse gypsum slurry, is separated from the reactor effluent at a concentration of 85 to 90 percent, and placed in a self-draining dewatering system. The "dry" solids are finally trucked to a landfill. The second fraction separated in the hydrocyclone is a fine gypsum slurry which is recycled to the neutralization reactor. The residual gel slurry forms the third fraction, and this is sent to a thickener after CO_2 degassing. A flocculating agent is added to the flow to the thickener to promote solids separation and thickening. The underflow from the thickener is centrifuged and the solids landfilled. The filtrate from the centrifuge is recycled to the thickener, and the thickener overflow is discharged.

The volume and characteristics of waste water streams from different sulfate process titanium dioxide plants do not differ greatly. Some variations, however, are noted as a result of

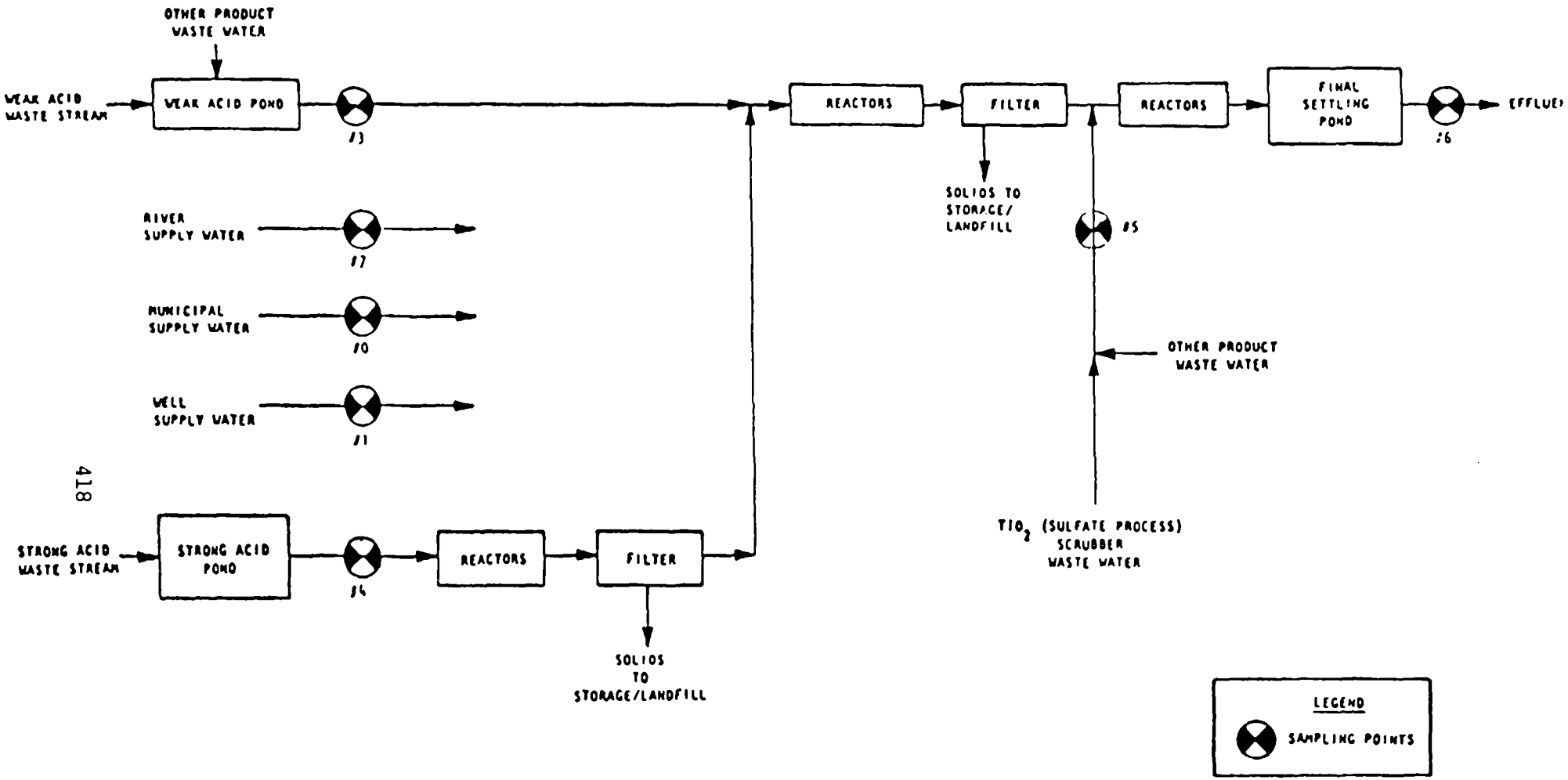

Figure 14-10. General flow diagram at plant #559 showing the sampling points. (Titanium dioxide - sulfate process.)

TABLE 14-22. FLOWS AND POLLUTANT CONCENTRATIONS FOR THE WASTE STREAMS SAMPLED FOR PLANT #559 PRODUCING TITANIUM DIOXIDE

Stream No.(4)	Sampled Stream Description	Unit Flow (m^3/kkg)	TSS Load (kg/kkg of TiO_2)	Iron Load (kg/kkg of TiO_2)
4	Weak Acid Pond Overflow	68.4 (1)(2)	1.23	1.23
5	Strong Acid Pond Overflow	6.1	205.85	106.34
6	Scrubber and Contact Cooling Water	361.4 (1)(2)	113.5	51.68
7	Final Treatment Effluent	436 (1)(2)(3)	10.0	1.92

(1) - The flow is contributed by the sulfate process stream.

(2) - The pollutant load was calculated by multiplying the flow contributed by the sulfate process stream times the concentration of pollutant. Pollutant Load = (total stream flow) x (fraction contributed by sulfate process waste) x stream pollutant concentrated.

(3) - While calculating the unit flow the contributions to the treatment process from precipitation, the water in the treatment chemicals, losses from evaporation and from solids leaving the process have not been considered.

(4) - See Figure 14-10 for sampling point location

differences in ore qualities, in location and in process details. The majority of the dissolved pollutants in waste water from this segment of the TiO2 industry consist of acidity and iron. Segregation of the waste water is important for control and treatment practices and aids in developing economically feasible treatment systems. Generally, weak and strong acid streams are segregated from each other as well as from the less contaminated waste waters which include contact cooling, scrubbing, and some finishing operation wastes. The unit flows for the segregated raw waste streams at different facilities are shown in Table 14-23.

The average total effluent flow rate is 475 m3/kkg (Table 14-23) for Plants #555, #694, and #559. Complete flow data is not available for Plants #696 and #605.

14.10.4 Toxic Pollutant Concentrations

Section 5.1.2 of this report describes the scope and methodology of the sampling program. In the Sulfate Process segment of the Titanium Dioxide Subcategory, 18 different sampling points were selected for studying the toxic pollutant characteristics of the water supplies, the raw process waste waters, and the plant effluent at two major manufacturing facilities. For the inorganic constituents 575 analytical data points were generated and an additional 1,824 data points were obtained for the organic toxic pollutants excluding blanks and duplicates for quality control.

The only organic toxic pollutant found during the screening program was phenol which was observed at only one of the two plants sampled. The maximum raw waste concentration of phenol was 0.020 mg/l, however the raw water source for the plant contained as much as 0.007 mg/l. This is well below the treatability level for phenol, therefore, phenol is not considered a significant or process related pollutant.

Daily raw waste loads were calculated from the flow rates measured or estimated at the time of sampling and the measured pollutant concentrations. That is,

$$\text{Daily loading (as kg of pollutant per day)} = \frac{(C)(Q)}{1000}$$

Where the concentration (C) of the pollutant is expressed in units of mg/l (Note: 1 kg/m3 = 1000 mg/l), and the flow rate (Q) is expressed in units of m3/day (m3, a cubic meter, is equal to 264 U.S. gallons).

Similarly, the unit loadings were calculated from the reported TiO2 productions rate (P), the waste stream flow rate (Q), and the measured pollutant concentration (C).

TABLE 14-23. PROCESS WASTE WATER FLOW AT PLANTS # 555, #694 and #559
TITANIUM DIOXIDE (SULFATE PROCESS)

Plant	Flow in (m^3/kkg of TiO_2)			
	A Strong acid	B Weak acid	C Scrubber and contact cooling water	D = A + B + C Total Effluent
#555	8.49	78.2	362	449
#694	16	67	457	540
#559	6.10	69	361	436
Average	10	72	393	475

Unit loading (as kg of pollutant per day kkg of TiO_2) $= \frac{(C)(Q)}{1000(P)}$

Where C and Q are expressed in the same units described above, and the production (P) is expressed in units of kkg/day (kkg is 1000 kg, a metric ton, which is equal to 2205 lb).

The maximum concentration of toxic pollutants found in the raw waste at concentrations above the treatability level in the screening and verification program were:

Pollutant	Maximum Concentration Observed (µg/l) Screening (Plants #555 & #559)	Verification (Plant #559)
Cadmium	340	12
Chromium	124,000	31,000
Copper	1,500	1,000
Lead	3,700	5,200
Nickel	6,400	1,300
Zinc	3,800	17,000
Antimony	20	1,400
Arsenic	11	340
Thallium	19	41
Selenium	360	Below detection limit

A summary of daily and unit (per unit of production) raw waste loads for all plants sampled can be found in Table 14-24. Individual plant raw waste loads and concentrations found in sampling are given in Table 14-25.

Based on the total annual production of this industry and the average waste load generated per unit product, the estimated total toxic pollutant raw waste loads generated each year for this subcategory are as follows:

TABLE 14-24. SUMMARY OF RAW WASTE LOADINGS FOUND IN SCREENING AND VERIFICATION SAMPLING

SUBCATEGORY TITANIUM DIOXIDE - SULFATE PROCESS

Pollutant	Loading Range, (kg/day)		Unit Loading, (kg/kkg)			No. of Plants(1)
	Minimum	Maximum	Minimum	Average	Maximum	
Toxic						
Antimony	5.0	28	.032	0.11	0.22	3
Arsenic	1.9	4.0	.012	0.19	.032	3
Cadmium	.068	7.2	.00044	0.19	.057	3
Chromium	140	530	1.1	2.0	3.4	3
Copper	8.2	19	.065	.085	.12	3
Lead	3.0	65	.024	.18	.42	3
Nickel	3.7	23	.029	.080	0.15	3
Selenium	7	9.5	.0020	.031	.060	2
Thallium	.47	1.2	.0030	.0055	.0080	2
Zinc	1.8	85	.014	.34	.55	3
Conventional and Nonconventional						
TSS				320		1
Iron, Fe				600		1

(1) - Data are taken only from those plants where pollutants were found above detection limits, or, in the case of TSS and Iron, where data are available.

TABLE 14-25. TOXIC POLLUTANTS: AVERAGE RAW WASTE LOADS AND CONCENTRATIONS

SUBCATEGORY TITANIUM DIOXIDE - SULFATE PROCESS

	Screening				Verification	
	Plant #555		Plant #559		Plant #559	
	(mg/l)	(kg/kkg)	(mg/l)	(kg/kkg)	(mg/l)	(kg/kkg)
Antimony	0.77	0.22	0.16	0.080	0.074	0.032
Arsenic	0.11	0.032	0.029	0.014	0.028	0.012
Cadmium	0.29	0.057	0.0020	0.0009	0.0010	0.00044
Chromium	3.8	1.1	7.0	3.4	3.1	1.4
Copper	0.20	0.065	0.25	0.12	11	0.070
Lead	0.075	0.024	0.20	0.10	0.96	0.42
Nickel	0.091	0.029	0.31	0.15	0.14	0.061
Selenium	NA	< 0.06	NA	NA	0.0050	0.0020
Thallium	NA	NA	0.020	0.0080	0.0070	0.0030
Zinc	0.088	0.014	1.1	0.55	1.04	0.45

NA = Not Available

Pollutant	Total Annual Raw Waste Load (kg/year)
Cadmium	5,000
Chromium	510,000
Copper	22,000
Lead	47,000
Nickel	21,000
Zinc	88,000
Antimony	29,000
Arsenic	49,000
Selenium	8,000
Thallium	1,400

14.11 POLLUTION ABATEMENT OPTIONS

14.11.1 Toxic Pollutants of Concern

The toxic pollutants found above treatability levels in this industry were evaluated on the basis of the maximum concentration observed in the process raw waste waters. These values are shown in Section 14.10.3. Using cadmium as an example of a borderline case, its maximum observed concentration of 0.34 mg/l is considered significant because removal efficiencies ranging from 70 to 97 percent could possibly be achieved on the basis of the lower limits of treatability shown in Table 8-11 for lime/settling, lime/filter, and sulfide/filter technologies. The BAT utlimately selected as a basis for regulations may not be as effective as the most advanced technology considered at this stage of the evaluation of alternatives.

The sampling data from this industry indicate that the toxic pollutants of concern are chromium, zinc, nickel, lead, copper, antimony, arsenic, and cadmium in decreasing order of the amounts found. Selenium and thallium were detected at levels too low to be treated effectively. The relative pollutant concentrations and loadings in the raw waste largely reflect the amounts of impurities in the ilmenite ore or titania slag being processed. The major impurity found in the various grades of raw material is ferrous iron as indicated in Table 14-19. The toxic metal impurities would also be expected to occur in a wide range of concentrations in the raw materials.

The advanced treatment technology options evaluated for sulfate process segment of the industry were selected for their ability to remove toxic metals of concern with greater efficiency than the prevailing (BPT) practice which also removes TSS, iron, and sulfate from the waste waters.

14.11.2 Process Modifications and Technology Transfer Options

Specific process modification recommendations are not made. However, several areas for further investigation suggest themselves. They are:

1. One of the water borne wastes, the strong sulfuric acid produced from the TiO2 sulfate process, has a sulfuric acid concentration that varies from 15 to 30 percent as H2SO4. Currently, only a small portion of it is recycled. Research is needed to find cost-effective ways to concentrate the acid to 90 percent and to eliminate the impurities (especially iron) so that it can be reused in the digester. This will eliminate much of the alkali requirements for neutralization and relieve disposal problems associated with solid waste gypsum.

2. Economical methods need to be developed for the recovery of iron oxide, aluminum, and vanadium from the waste to the extent that markets are available for these materials.

3. If markets could be developed for the sale of ferrous sulfate (copperas), solid waste disposal problems would be reduced. Currently, a portion is sold and the rest disposed of as a solid waste.

14.11.3 Best Management Practices

Storm water runoff from the plant site should be collected and sent to the treatment facility for the removal of suspended solids.

14.11.4 Prevailing Control and Treatment Practices

The treatment practices of the plants producing TiO2 by the sulfate process is given in Sections 14.10.1 to 14.10.3.

14.11.5 Advanced Treatment Technologies

Although sulfide precipitation, the xanthate process, and ion-exchange might be applied to the clarified solution obtained by alkaline precipitation, oxidation and settling the cost incurred are high because of the large quantity of water (more than 400 m3/kkg of TiO2) that must be treated. The sulfate process is one of two subcategories (the other being Soda Ash Solvay Process) in the Inorganic Chemicals Industry studied in this report that generates the largest quantities of waste effluent.

14.12 SELECTION OF APPROPRIATE TECHNOLOGY AND EQUIPMENT

14.12.1 Technologies for Different Treatment Levels

Level 1 (BPT)

In the Level 1 treatment the blended strong and weak acid streams are neutralized with calcium carbonate. The toxic pollutants are precipitated and separated along with gypsum in first stage thickeners. Aeration then oxidizes any ferrous iron present and removes CO2 before mixing with miscellaneous plant waste containing minor amounts of heavy metal priority pollutants. The combined stream is then given lime treatment of pH 9 and settled in polishing lagoons before discharge. This three-step system is patterned after existing systems which separate the acid streams from miscellaneous wastes in order to make possible the recovery of pure and impure gypsum from the relatively consistent acid streams. Alkaline precipitation of heavy metals, and significant removal of arsenic occur during the last two-stages of lime neutralization, and settling of precipitated toxic pollutants occurs in the final polishing lagoons. Because waste flow rates are unusually high in the sulfate process, long-term lagoon settling is more cost effective than dual media filtration. The mechanical aeration step used for oxidizing ferrous iron may contribute an important mechanism for the simultaneous removal of other heavy metals present very similar to the ferrite coprecipitation method described in the Treatment Technology Assessment section. The flow diagram of the treatment system is shown in Figure 14-11.

Although the Model Plant does not include equipment for gypsum recovery, it is based on separation of waste streams, making pure or impure gypsum recovery possible by intercepting thickener underflow(s). Recovery of gypsum as a saleable by-product is not a viable option since no market appears to exist at this time.

Level 2

Level 2 for the sulfate process employs the described BPT treatment for strong acid, weak acid, and 55% of the "other wastes". The remaining other wastes receive soda ash treatment and settling, to permit recycling a nonscaling effluent for scrubbers and miscellanous uses. Heavy metal pollutants in the separated recycle stream are settled as carbonates and periodically removed to a secure landfill. The flow diagram of this treatment is shown in Figure 14-12.

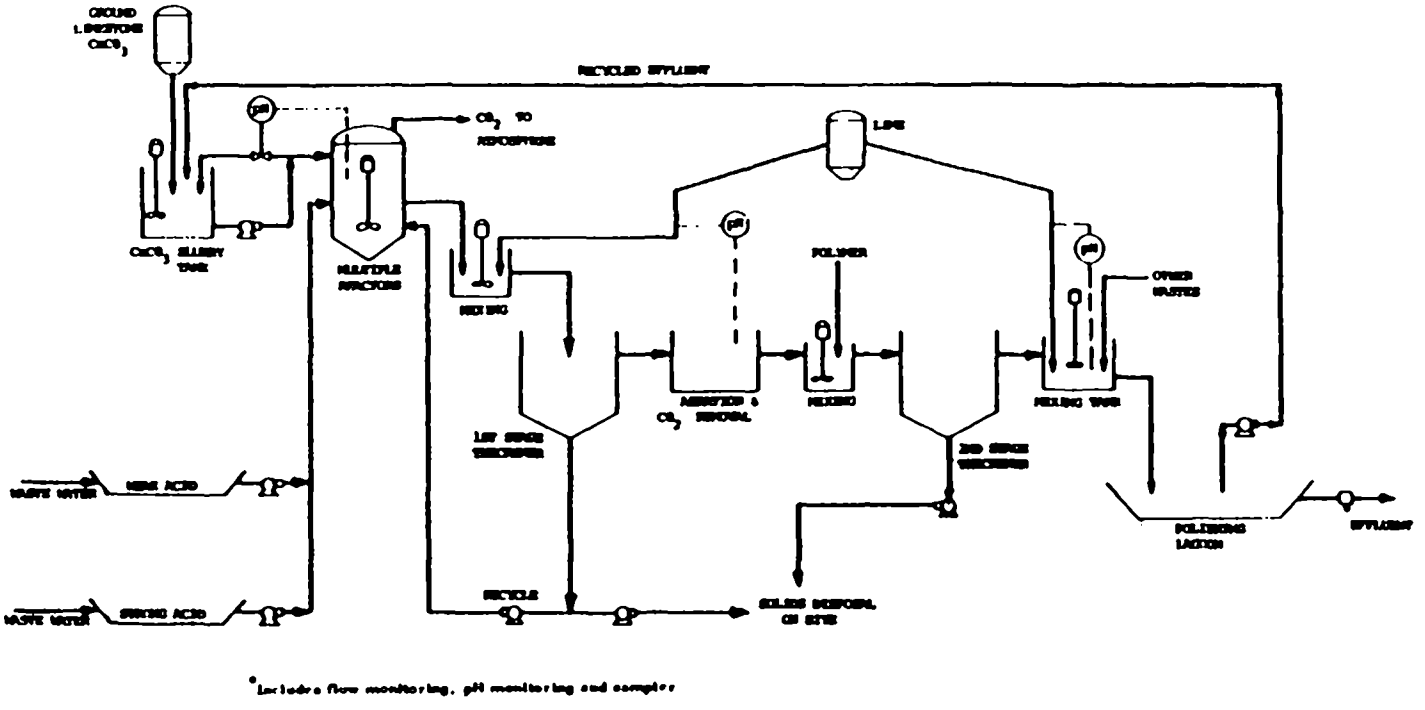

*Includes flow monitoring, pH monitoring and computer

Figure 14-11. Level 1 waste water treatment for titanium dioxide - sulfate process.

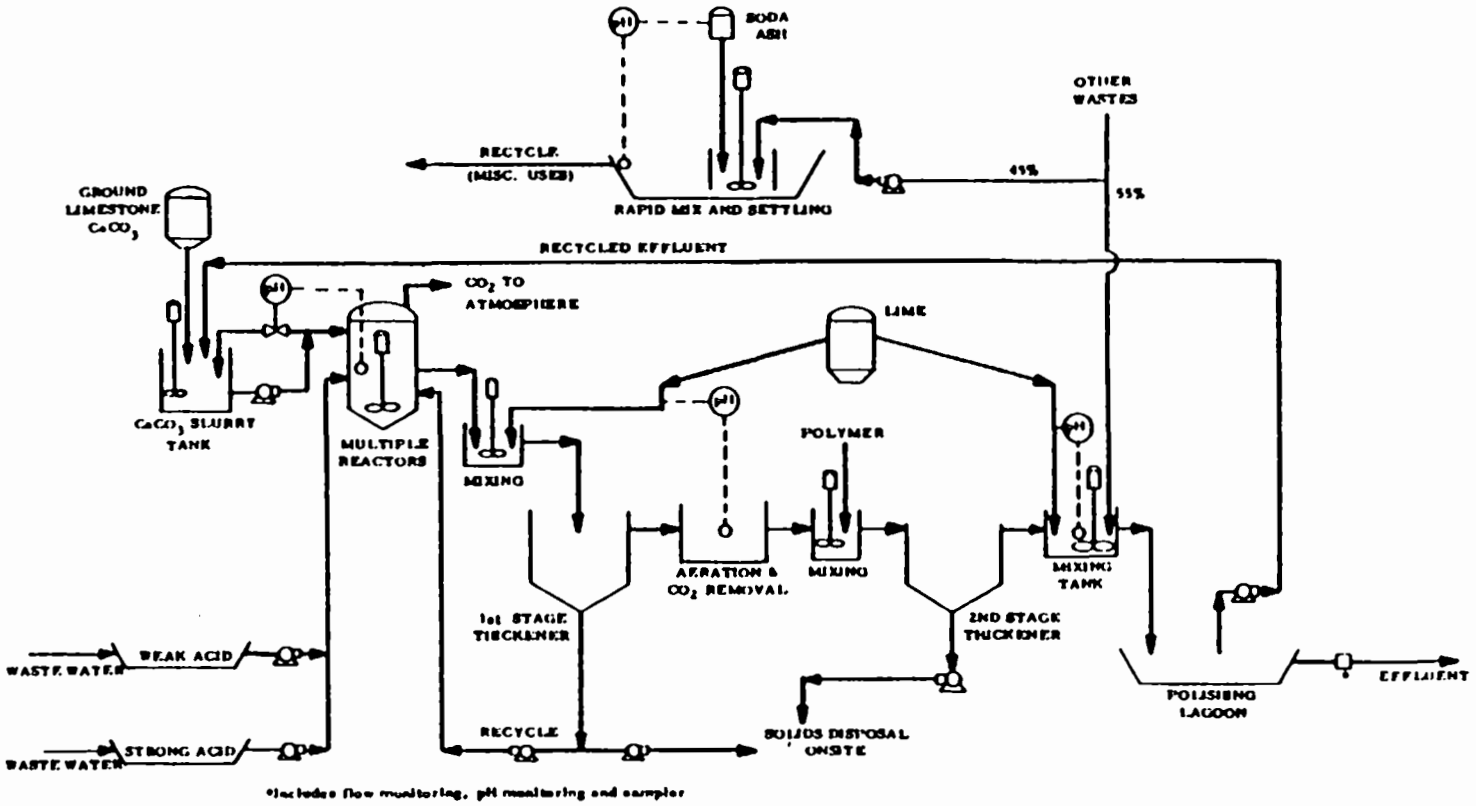

Figure 14-12. Level 2 waste water treatment for titanium dioxide - sulfate process.

14.12.2 Equipment for Different Treatment Levels

Equipment Functions

Treatment of waste water from the sulfate process involves the mechanized handling of large quantities of chemicals and reaction products, primarily gypsum.

The BPT model includes rail car deliveries of ground limestone and lime, bucket elevators, storage bins, multiple feeders, mechanical feeders, mechanical aerators, and two-stage thickening for removal of pure and iron-bearing gypsum for the treated acid waste streams. Calcium saturated thickener overflow and miscellaneous other waters are subjected to alkaline precipitation and settled in a one-day polishing pond. In Level 2, to reduce the mass discharge of heavy metals, only 55% of the BPT "other waste" flow joins the treated acid waste stream, for BPT treatment as described above. However, the remaining 45% of "other wastes" is given separate treatment with soda ash settled in a lagoon, for recycle to miscellaneous scrubber and noncontact cooling purposes. Treatment of the strong and weak acid streams, including oxidation and settling of ferrous iron, remains the same as in the BPT model.

Chemicals and Handling

First stage neutralization employs ground limestone, while lime is used for second stage and final alkaline precipitation. Oxygen is supplied from atmospheric air, and polymer is added to assist in the second stage settling of iron hydroxide. Aside from the bulk handling of large amounts of these common chemicals, there are no special hazards involved in their use.

Separation and Removal of Solids

Large quantities of thickener underflow are pumped to spreading areas for consolidation of the solids, which are later pushed into 18 foot high piles on land provided for 10 years of operation. Solids from occasional draining of the polishing lagoon and the Level 2 recycling lagoon are returned to the aeration step of the waste acid streams, after which they will be settled out in the second stage thickener, being handled as part of the thickener underflow. Although no dewatering equipment is provided, the first and second stage thickeners can be sources of pure and impure gypsum for future byproduct recovery.

14.13 TREATMENT COST ESTIMATES

14.13.1 General Discussion

To prepare treatment cost estimates, a model plant concept was developed. For conceptual design a representative unit waste flow was selected, together with three different Ti02 production rates. The latter were chosen to cover most of the rates typical for the Ti02 subcategory (Sulfate Process). The selected daily Ti02 production for the model plant was multiplied by the selected unit flow to obtain the volume of influent to the treatment system. The selected unit raw waste pollutant loads were also multiplied by the model plant production rate to determine the pollutant load on the treatment system. Capital and equipment costs were then calculated based on developed conceptual design parameters for each model plant production rate. The rationale used for the model plant selection is given below.

Waste Water Flow

Waste effluent data is available for three plants and is given in Table 14-23. For the model the average value of the three plant data has been used. The unit flow data for strong acid ranges from 6.10 to 16 m3/kkg of Ti02. (Table 14-23). For the model plant the average value of 10 m3/kkg has been used. Unit flows for the weak acid stream range from 67 to 78 m3/kkg. For the model plants, a unit flow of 72 m3/kkg of Ti02 is used, The third segregated stream includes contact cooling water, scrubber water, and finishing operation waste water. The unit flow for this stream varies from plant to plant and depends largely on the type and quality of the Ti02 pigment end product desired. For model plants, a unit flow of 393 m3/kkg of Ti02 was used. For model plants a total effluent flow which consists of the strong acid, weak acid, and scrubber effluent, etcetra, of 475 m3/kkg of Ti02 was used.

Production

Five plants produce titanium dioxide by the sulfate process at a total production rate of 259,000 metric tons per year. Production ranges from a minimum of 31,000 kkg/yr to a maximum of 74,500 kkg/yr with an average of 49,000 kkg/yr and a median of 43,000 kkg/yr. For treatment cost estimates, three production levels were selected. These were 31,800 kkg/yr, 47,700 kkg/yr, and 74,500 kkg/yr.

Waste Water Pollutant Load

As stated before, the principal pollutants occur in the strong and weak acid streams and include high acidity (sulfuric

acid), suspended solids, iron and other heavy metal sulfates. The other waste waters contain titanium dioxide and small amounts of other heavy metals as suspended solids. Iron concentrations vary depending on the grade of ilmenite ore used.

14.13.2 Model Plant Control and Treatment Costs

The average raw waste pollutant loadings given in Table 14-23 were used for the model plant. For the model plants, a total iron loading of 600 kg/kkg was used with the assumption that two-thirds was suspended ferric hydroxide and one-third (200 kg/kkg of TiO_2) was soluble ferrous iron. The unit sulfate and suspended solid loadings for the different waste water streams for the model plant were:

Stream	Sulfate Loading (kg/kkg of TiO_2)	TSS Loading (kg/kkg of TiO_2)
Weak Acid	2,300	300
Strong Acid	1,800	200
Other Waste Water	Negligible	113

Chemical Useage

In the model BPT system, powdered limestone is used for first stage neutralization of mixed strong and weak acids, at the unit rate of 3,000 kg/kkg of TiO_2. Pebble lime (CaO) is used for second stage neutralization of the mixed acid streams and for the final neutralization of the total combined flow, including the other miscellaneous wastes. The unit application of CaO for all purposes is 0.235 kg/kkg of TiO_2. In Level 2 (which is not used as a regulation basis), soda ash is added to 45% of the "other waste" flow at an approximate dosage of 130 µg/l, to permit partial recycle for miscellaneous purposes.

Solids Produced

Although some existing plants have attempted to produce two grades of saleable gypsum from the strong and weak acid streams, at present there is not a sufficient market for gypsum to justify byproduct gypsum recovery in the model plants. The solids produced from the treatment facility consist of gypsum, iron oxide, and the original suspended solids introduced in the influent. The total solids produced in the model plant are assumed to be 5,500 kg/kkg of TiO_2.

Additional solids generated in the soda ash treatment of "other wastes" at Level 2 are only a few hundred pounds per day,

and are considered a negligible increase in total solids production. These additional solids are periodically transferred from the recycle polishing ponds to the main treatment system just ahead of the aeration step. In this way, the additional quantity of toxic metals will be subjected to the ferric iron flocculation, lime treatment, and settling sequence in the BPT system.

The estimated costs for three models having different production levels are given in Table 14-26, 14-27, and 14-28. Annual treatment costs as a function of production are shown graphically in Figure 14-13. Similarly, treatment cost per metric ton of product is given in Figure 14-14.

Table 14-29 presents a summary of the unit cost distibution between amortization and operation and maintenance cost components at different productions and at the BPT and the Level 2 treatment.

For existing sources at the first level of treatment, the disposal of sludge is on-site, hence land requirements are fairly large. Amortization, chemicals, labor, and residual waste disposal costs have significant impact on the annual costs. The treatment Level 2 amortization, chemicals, and labor constitute a major portion of the additional costs.

14.14 BASIS FOR REGULATIONS

14.14.1 Evaluation of BPT Practices

Out of a total of four TiO2 plants (sulfate process) that are currently in operation, only one plant (#559) has a BPT treatment system. The other 3 plants practice partial neutralization and settling. The proposed BPT limitations are based on available long-term data from plant #559.

Pollutant Removal with BPT Treatment

Treatment Level 1 is equivalent to the proposed BPT in the Titanium Dioxide (sulfate process) industry. Means, standard deviations, and variability factors were calculated from data submitted by Plant #559 for final effluent quality, and the results are given in Table 14-30. The performance characteristics are utlized for the development of the proposed BPT regulations.

The ability of the treatment system to remove conventional, nonconventional, and toxic pollutants was estimated by comparing the treated effluent qualities with the raw waste qualities of the sampled waste streams. The data for Plant #559 are given in Table 14-31.

TABLE 14-26. MODEL PLANT TREATMENT COSTS

Subcategory TITANIUM DIOXIDE Sulfate

Production 31,800 metric tons per year (35,059 tons per year)
90 metric tons per day (100 tons per day)
Waste water flow 42750 cubic meters per day.

	LEVEL OF TREATMENT*	
	FIRST	SECOND
A. INVESTMENT COST		
Construction	$701,200	$117,500
Equipment in place, including piping, fittings, electrical work and controls.....	2,328,400	233,000
Monitoring equipment in place.....	9,000	
Engineering design and inspection.....	607,720	70,100
Incidentals, overhead, fees, contingencies...	607,720	70,100
Land.....	1,272,000	12,000
TOTAL INVESTMENT COST	$5,526,040	$502,700
B. OPERATION AND MAINTENANCE COST		
Labor and supervision.	$504,000	$56,000
Energy.....	96,000	9,000
Chemicals.....	1,589,000	176,000
Maintenance.....	425,404	49,070
Taxes and insurance...	165,781	15,081
Residual waste disposal.....	210,000	
Monitoring, analysis and reporting.....	15,000	7,500
TOTAL OPERATION AND MAINTENANCE COST	$3,005,185	$312,651
C. AMORTIZATION OF INVESTMENT COST	$692,132	$79,836
TOTAL ANNUAL COST	$3,697,317	$392,487

*First level represents the base cost of treatment system.
Other levels represent the incremental cost above base cost.

TABLE 14-27. MODEL PLANT TREATMENT COSTS

Subcategory TITANIUM DIOXIDE Sulfate

Production	47,700 metric tons per year	(52,589 tons per year)
	136 metric tons per day	(150 tons per day)
Waste water flow	64600 cubic meters per day.	

	LEVEL OF TREATMENT*	
	FIRST	SECOND
A. INVESTMENT COST		
Construction	$958,700	$161,000
Equipment in place, including piping, fittings, electrical work and controls.....	2,980,200	278,000
Monitoring equipment in place.....	9,000	
Engineering design and inspection.....	789,580	87,800
Incidentals, overhead, fees, contingencies...	789,580	87,800
Land.....	1,920,000	18,000
TOTAL INVESTMENT COST	$7,447,060	$632,600
B. OPERATION AND MAINTENANCE COST		
Labor and supervision.	$672,000	$56,000
Energy.....	138,000	12,000
Chemicals.....	2,384,000	265,000
Maintenance.....	552,706	61,460
Taxes and insurance...	223,411	18,978
Residual waste disposal.....	315,000	
Monitoring, analysis and reporting.....	15,000	7,500
TOTAL OPERATION AND MAINTENANCE COST	$4,300,117	$420,938
C. AMORTIZATION OF INVESTMENT COST	$899,252	$99,995
TOTAL ANNUAL COST	$5,199,369	$520,933

*First level represents the base cost of treatment system. Other levels represent the incremental cost above base cost.

TABLE 14-28. MODEL PLANT TREATMENT COSTS

Subcategory TITANIUM DIOXIDE Sulfate

Production 74,500 metric tons per year (82,136 tons per year)
212 metric tons per day (234 tons per day)
Waste water flow 100700 cubic meters per day.

	LEVEL OF TREATMENT*	
	FIRST	SECOND
A. INVESTMENT COST		
Construction	$1,293,500	$208,000
Equipment in place, including piping, fittings, electrical work and controls.....	3,914,500	322,000
Monitoring equipment in place.....	9,000	
Engineering design and inspection.....	1,043,400	106,000
Incidentals, overhead, fees, contingencies...	1,043,400	106,000
Land.....	2,940,000	24,000
TOTAL INVESTMENT COST	$10,243,800	$766,000
B. OPERATION AND MAINTENANCE COST		
Labor and supervision.	$672,000	$56,000
Energy.....	199,000	18,000
Chemicals.....	3,719,000	412,000
Maintenance.....	730,380	74,200
Taxes and insurance...	307,314	22,980
Residual waste disposal.....	420,000	
Monitoring, analysis and reporting.....	15,000	7,500
TOTAL OPERATION AND MAINTENANCE COST	$6,062,694	$590,680
C. AMORTIZATION OF INVESTMENT COST	$1,188,328	$120,723
TOTAL ANNUAL COST	$7,251,022	$711,403

*First level represents the base cost of treatment system.
Other levels represent the incremental cost above base cost.

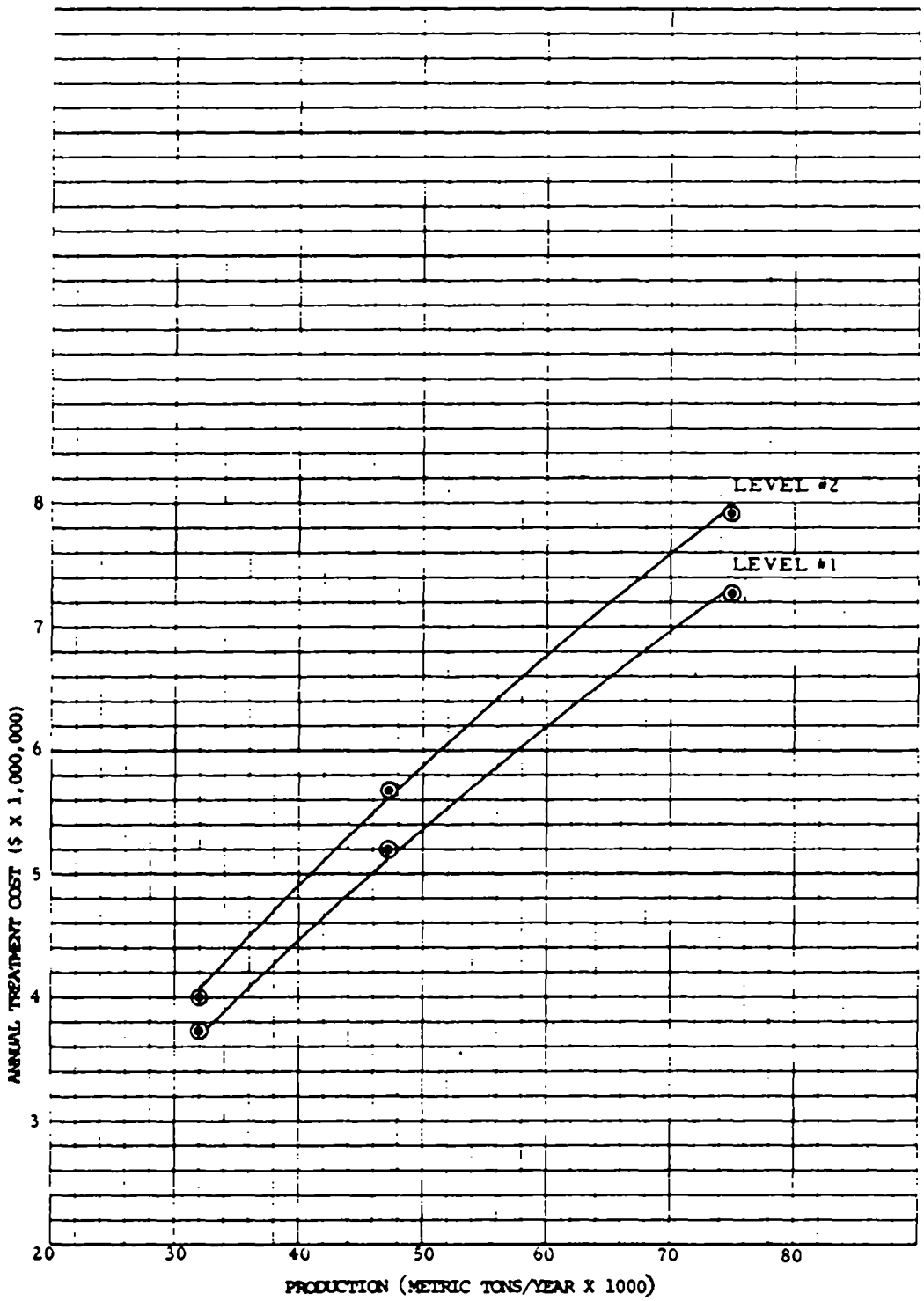

Figure 14-13. Annual treatment cost vs. production for the titanium dioxide subcategory, sulfate process.

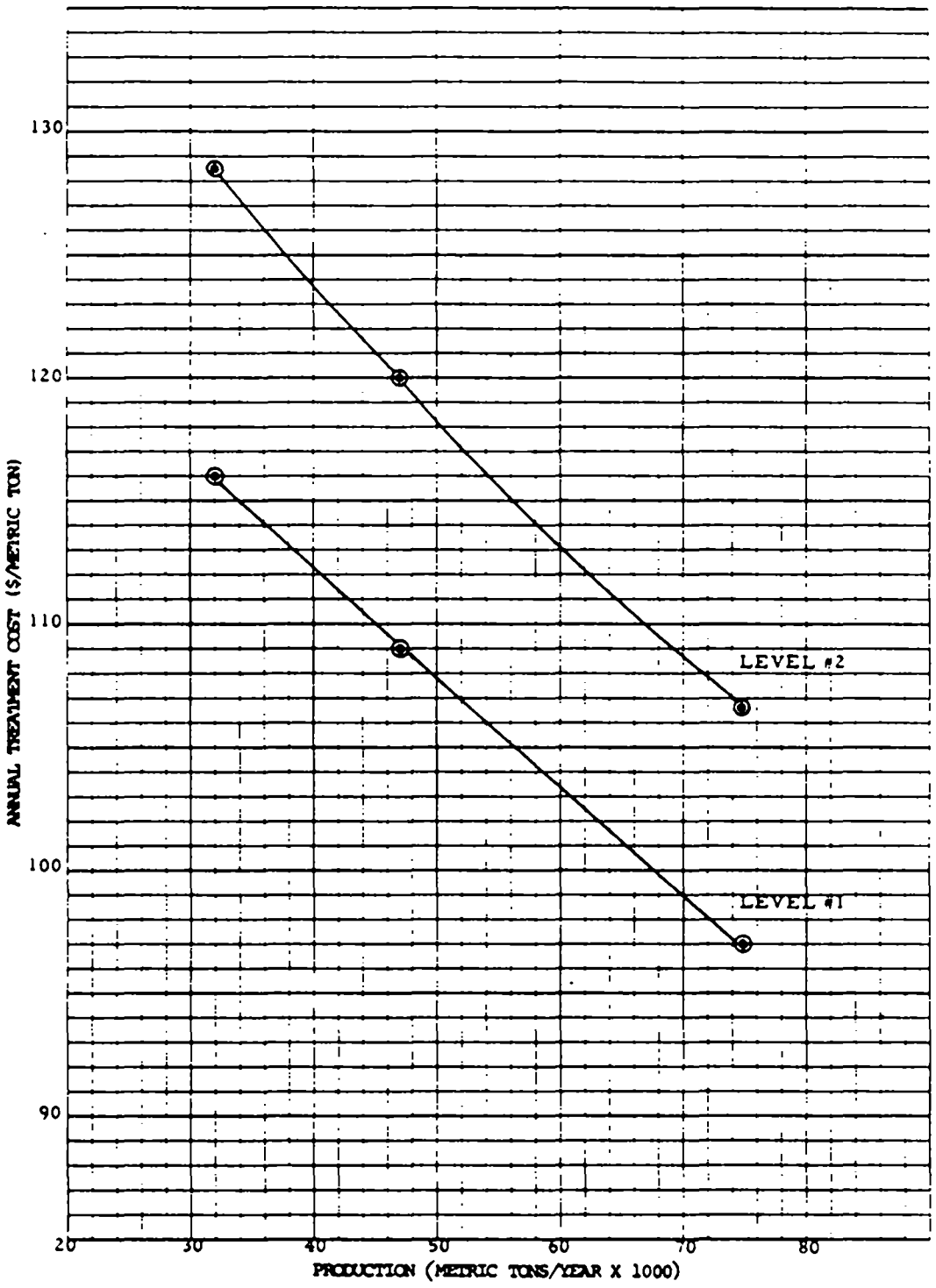

Figure 14-14. Annual unit treatment cost vs. production for the titanium dioxide subcategory, sulfate process.

TABLE 14-29. MODEL PLANT TREATMENT COSTS

Subcategory TITANIUM DIOXIDE Sulfate

	PRODUCTION (kkg/yr)	FLOW (m3/day)	Annual Treatment Costs ($/kkg) LEVEL OF TREATMENT FIRST	SECOND	THIRD	FOURTH
Annual Operation and Maintenance	31,800	61,600	94.50	9.83	Not Applicable	
	47,700	92,600	90.15	8.82		
	74,500	144,000	81.38	7.93		
Annual Amortization	31,800	61,600	21.77	2.51		
	47,700	92,600	18.85	2.10		
	74,500	144,000	15.95	1.62		
Total Cost	31,800	61,600	116.27	12.34		
	47,700	92,600	109.00	10.92		
	74,500	144,000	97.33	9.55		

TABLE 14-30. HISTORICAL EFFLUENT MONITORING DATA SUMMARY

SUBCATEGORY - TITANIUM DIOXIDE
SULFATE PROCESS PLANT #559

	Pollutant						
	TSS	Cadmium	Chromium	Iron	Lead	Nickel	Zinc
Daily Data							
No. of Points	899	109	128	854	128	128	128
Average, $\bar{x}$	21.0	0.060	0.070	0.62	0.068	0.08	0.151
Standard Deviation, S(1)	65.93	0.044	0.054	3.46	0.041	0.071	0.204
Standard Deviation, S'(2)	1.54	0.68	0.67	1.86	0.56	0.76	1.02
Variability Factor(3)	11.0	3.85	3.81	13.65	3.16	4.39	6.41
30-Day Average							
No. of Points	30	26	30	28	30	30	30
Standard Deviation(1)	21.84	0.042	0.038	0.94	0.04	0.048	0.16
Variability Factor(4)	3.04	2.43	2.04	4.00	2.14	4.39	3.05
Variability Factor Ratio VFR(5)	3.62	1.58	1.87	3.38	1.48	1.00	2.10

(Continued)

TABLE 14-30. Continued

(1) S is the arithmetic standard deviation and is given by

$$S = \sqrt{\frac{\sum_{i=1}^{i=n} (x_i - \bar{x})^2}{n-1}}$$

where xi is the data value for point i

$\bar{x}$ is the mean value

n is the number of data points

(2) S' is the estimated standard deviation

$$S' = \sqrt{\ln\left(1 + \left(\frac{S}{\bar{x}}\right)^2\right)}$$

where S is the arithmetic standard deviation

$\bar{x}$ is the mean value

(3) The variability factor (VF) of daily measurements for lognormal distribution is found by the expression

$$\ln (VF) = S' (Z - 0.5 S')$$

where S' is the estimated standard deviation

$Z = 2.33$ for 99th percentile

(Continued)

TABLE 14-30. Continued

(4) The variability factor (VF) for 30-day average measurements is found by the expression

$$VF = 1.0 + Z \left(\frac{S}{\bar{x}}\right)$$

Where $\bar{x}$ is the mean value

S is the arithmetic standard deviation

Z = 1.64 for 95th percentile

(5) VFR: Ratio of the 24-hour variability factor to the 30-day variability factor

TABLE 14-31. VERIFICATION RESULTS FROM - SULFATE PROCESS TITANIUM DIOXIDE PLANT #559

Pollutant	Raw Waste		Treated Effluent		
	A Unit Load (kg/kkg)	B Concentration (mg/l)	C Unit Load (kg/kkg)	D Concentration (mg/l)	E Removal Efficiency (%)
Total Suspended Solids	116	266	10.0	23	91
Iron	364	835	1.92	4.4	99
Cadmium	0.00045	0.0010	0.000040	0.00010	90
Chromium	1.3	3.1	0.011	0.025	99
Copper	0.070	0.16	0.002	0.0050	97
Lead	0.040	0.96	0.00090	0.0020	99
Nickel	0.060	0.14	0.0020	0.0050	96
Zinc	0.45	1.0	0.030	0.062	94
Arsenic	0.012	0.028	0.0040	0.010	64
Antimony	0.030	0.074	0.0060	0.015	80
Selenium	0.0020	0.0050	0.0020	0.0050	0
Thallium	0.0030	0.0070	0.0010	0.0030	60

14.14.2 Basis for Proposed BPT Effluent Limitations

Technology Basis

For BPT, the Agency is proposing limitations based on equalization, limestone neutralization, clarification, aeration, alkaline precipitation and settling followed by pH adjustment before final discharge of the effluent. This technology is chosen because it has been installed and operated successfully by a plant in the industry.

Flow Basis

Waste flow data is available for 3 plants and the average value of 475 m3/kkg of Ti02 (Table 14-23) is taken as the inflow for the model plant treatment system. The treatment plant effluent is taken to be the same as the influent and the loss or addition of water through chemicals, evaporation, precipitation, and through solid removal have been neglected.

Selection of Pollutants to be Regulated

The selection of pollutants for which limitations are proposed is based on the evalutation of raw waste data from the screening and verification program. The following two major factors were considered:

Raw waste pollutant concentration - Initially one plant was visted and the waste effluent sampled in the screening phase. The discovery of any toxic pollutants in the raw waste above the detection level and in the treatability range was the basis for proceeding with verification sampling. The presence of the same pollutants in the verification phase confirmed the significance of the screening program observation. The pollutants found in signifcant levels in the raw waste of the plants sampled in screening and verification are given in Section 14.10.3.

On the basis of maximum concentration of pollutants in the raw waste the preliminary selection of candidates for regulation included chromium, cadmium, copper, lead, nickel, zinc, arsenic, and antimony.

Total subcategory raw waste pollutant loading - The average unit toxic pollutant loadings of the raw waste of plants sampled in the screening and verification program (Table 14-23) was multiplied by the total Ti02 production rate of 259,000 kkg/year to yield an estimate of the total annual pollutant loading for the subcategory (see Section 14.10.3). The data give an indication of the overall magnitude of the pollution potential for the subcategory.

Basis of Pollutant Limitations

Conventional and nonconventional parameters

A. The treated effluent is to be controlled within the range of pH 6.0 to 9.0. This limitation is based on the data presented in Appendix B of this report and the JRB Study (52).

B. TSS and Iron: The long-term average values of 21 mg/l for TSS and 0.62 mg/l for iron derived from the monitoring data of Plant #559 (Table 14-30) was used as the proposed subcategory performance values. The variability factors for daily and 30-day average estimated from Plant #559 long-term data (Table 14-30) were used in calculating the concentration basis and effluent limitations as shown below.

Total Suspended Solids

The proposed TSS maximum 30-day average concentration is given by:

(21 mg/l)(3.04) = 64 mg/l

The proposed TSS 24-hour maximum by

(21 mg/l)(11.0) = 230 mg/l

The proposed TSS maximum 30-day average effluent limit was obtained by using the model plant unit flow of 475 m3/kkg, namely

$$(64\ \text{mg/l})(475\ \text{m3/kkg})\left(\frac{\text{kg/m3}}{1000\ \text{mg/l}}\right) = \frac{30\ \text{kg of TSS}}{\text{kkg of TiO2}}$$

from:

The proposed iron 24-hour maximum effluent limit:

$$= (230\ \text{mg/l})(475\ \text{m3/kkg})\left(\frac{\text{kg/m3}}{1000\ \text{mg/l}}\right) = \frac{110\ \text{kg of TSS}}{\text{kkg of TiO2}}$$

The proposed iron maximum 30-day average concentration:

= (0.62 mg/l)(4.0) = 2.5 mg/l

The proposed iron 24-hour maximum concentration:

= (0.62 mg/l)(13.65) = 8.5 mg/l

The proposed iron maximum 30-day average effluent limit

$$= (2.5\ \text{mg/l})(475\ \text{m3/kkg})\left(\frac{\text{kg/m3}}{1000\ \text{mg/l}}\right) = \frac{1.2\ \text{kg of iron}}{\text{kkg of TiO2}}$$

The proposed iron 24-hour maximum effluent limit

$$= (8.5\ mg/l)(475\ m3/kkg)\left(\frac{kg/m3}{1000\ mg/l}\right) = \frac{4.1\ kg\ of\ iron}{kkg\ of\ TiO2}$$

Toxic Pollutants - The effluent limitations proposed for the selected toxic pollutant parameters are derived from two sources of information. These are 1) long-term monitoring data for Plant #559, 2) literature-based treatability estimates.

If the long-term data of a certain pollutant was not available or the 30-day average obtained from the long-term data was less than the lower level of treatability values, then the lower limit of treatability was used as the concentration basis for the maximum 30-day average limitation. The long-term data of most of the toxic pollutants for Plant #559 are given in Table 14-30.

A. Antimony: The maximum concentration of antimony observed in the raw waste during the screening and verification program was 1.4 mg/l (shown as 1400 µg/l in Section 14.10.4). At Plant #559, 80 percent of the antimony is removed during treatment (Table 14-31). The proposed 30-day average concentration of 0.8 mg/l is based on the lower limit of treatability as determined by literature studies (Table 8-11). A variability factor ratio of 1.9 (ratio of 24-hour variability factor to the 30-day variability factor) determined for chromium (Table 14-30) from the long-term data for Plant #559 was used to obtain the 24-hour maximum concentration. Thus:

The proposed antimony 24-hour maximum concentration is given by:

$$(0.80\ mg/l)(1.9) = 1.5\ mg/l$$

The proposed antimony 30-day average effluent limit is given by:

$$(0.80\ mg/l)(475\ m3/kkg)\left(\frac{kg/m3}{1000\ mg/l}\right) = \frac{0.38\ kg\ of\ antimony}{kkg\ of\ TiO2}$$

The proposed antimony 24-hour maximum effluent limit is given by:

$$(1.5\ mg/l)(475\ m3/kkg)\left(\frac{kg/m3}{1000\ mg/l}\right) = \frac{0.71\ kg\ of\ antimony}{kkg\ of\ TiO2}$$

B. Cadmium: The maximum concentration of cadmium found in the raw wastes during the screening and verification program was 0.340 mg/l (shown as 340 µg/l in Section 14.10.4). The data for Plant #559 indicated a removal efficiency of 90.0 percent (Table

14-31). Thus, the long-term average value of 0.060 mg/l and the variability factor of 3.85 for daily maximum and 2.43 for 30-day average estimated from the long-term monitoring data of Plant #559 (Table 14-30) were used in calculating the proposed concentrations and effluent limitations as shown below:

The proposed cadmium 30-day average concentration is given by:

$$(0.060 \text{ mg/l})(2.43) = 0.15 \text{ mg/l}$$

The proposed cadmium 24-hour maximum concentration is given by:

$$(0.060 \text{ mg/l})(3.85) = 0.24 \text{ mg/l}$$

The proposed cadmium 30-day effluent limit is given by:

$$= (0.15 \text{ mg/l})(475 \text{ m3/kkg}) \left(\frac{\text{kg/m3}}{1000 \text{ mg/l}}\right) = \frac{0.070 \text{ kg of cadmium}}{\text{kkg of TiO2}}$$

The proposed cadmium 24-hour maximum effluent limit is given by:

$$(0.24 \text{ mg/l})(475 \text{ m3/kkg})\left(\frac{\text{kg/m3}}{1000 \text{ mg/l}}\right) = \frac{0.11 \text{ kg of cadmium}}{\text{kkg of TiO2}}$$

C. Chromium: The proposed subcategory limitation of 0.070 mg/l is based on the average of the long-term monitoring data for Plant #559 given in Table 14-30. The variability factor of 3.81 for the daily data and the variability factor of 2.04 for 30-day averages were estimated from the same data for Plant #559, and an established model plant unit flow of 475 m3/kkg was used in setting up the proposed limitations.

The proposed chromium maximum 30-day average concentration is given by:

$$(0.070 \text{ mg/l})(2.04) = 0.14 \text{ mg/l}$$

The proposed chromium 24-hour maximum concentration is given by:

$$(0.070 \text{ mg/l})(3.81) = 0.27 \text{ mg/l}$$

The proposed chromium 30-day average effluent limit is given by:

$$(0.14 \text{ mg/l})(475 \text{ m3/kkg}) \left(\frac{\text{kg/m3}}{1000 \text{ mg/l}}\right) = \frac{0.070 \text{ kg of chromium}}{\text{kkg of TiO2}}$$

The proposed chromium 24-hour maximum effluent limit is given by:

$$(0.27\ mg/l)(475\ m3/kkg)\left(\frac{kg/m3}{1000\ mg/l}\right) = \frac{0.13\ kg\ of\ chromium}{kkg\ of\ TiO2}$$

D. Copper: The value of 0.5 mg/l, which is the lower limit achieved from the lime-settling of copper contaminated waste water from the treatability studies (Table 8-11) was selected as the proposed maximum 30-day average concentration because no long-term data for copper is available. The variability factor ratio of 1.87 developed from the long-term data for Plant #559 for chromium (Table 14-30) was used to estimate the 24-hour maximum concentration because performance of the treatment system is expected to be the same for copper as for chromium . The calculations for the proposed concentrations and effluent limits are given below:

The proposed copper 24-hour maximum concentration is given by

$$(0.50\ mg/l)(1.87) = 0.95\ mg/l$$

The proposed copper 30-day average effluent limit is given by:

$$(0.50\ mg/l)(475\ m3/kkg)\left(\frac{kg/m3}{1000\ mg/l}\right) = \frac{0.24\ kg\ of\ copper}{kkg\ of\ TiO2}$$

The proposed copper 24-hour maximum effluent limit is given by:

$$(0.95\ mg/l)(475\ m3/kkg)\left(\frac{kg/m3}{1000\ mg/l}\right) = \frac{0.46\ kg\ of\ copper}{kkg\ of\ TiO2}$$

E. Lead: The lowest concentration of lead achievable by treatment as determined by treatability studies (value of 0.30 mg/l from Table 8-11 for lime-settling) was selected as the proposed maximum 30-day average concentration. The higher value was selected because if lead is present in large quantity this represents the achievable level. The selected value is higher than the value obtained by multiplying the long-term average of .070 mg/l by the 30-day variability factor of 2.14 estimated from the monitoring data for Plant #559 (Table 14-30). The variability factor ratio of 1.48 obtained from the long-term monitoring of lead for Plant #559 (Table 14-30) was used in calculating the 24-hour maximum concentration. The calculations used to establish the proposed concentrations and effluent limitations are shown below:

The proposed lead 24-hour maximum concentration is given by:

$$(0.30\ mg/l)(1.5) = 0.45\ mg/l$$

The proposed lead 30-day average effluent limit is given by:

$$(0.30\ mg/l)(475\ m3/kkg)\left(\frac{kg/m3}{1000\ mg/l}\right) = \frac{0.14\ kg\ of\ lead}{kkg\ of\ TiO2}$$

The proposed 24-hour maximum effluent limit is given by:

$$(0.44\ mg/l)(475\ m3/kkg)\left(\frac{kg/m3}{1000\ mg/l}\right) = \frac{0.21\ kg\ of\ lead}{kkg\ of\ TiO2}$$

F. Nickel: The proposed 30-day average concentration of 0.20 mg/l is based on the lower limit established by treatability studies and achieved using lime treatment and settling (Table 8-11). The proposed daily maximum concentration was estimated by multiplying the 30-day average concentration by the variability factor ratio of 1.87 developed for chromium from the long-term data for Plant #559 (Table 14-30). The variability factor for chromium was used because the treatment system is expected to perform similarly for nickel and chromium. The calculations for the proposed concentrations and effluent limits are given below:

The proposed nickel 24-hour maximum concentration is given by:

$$(0.20\ mg/l)(1.87) = 0.37\ mg/l$$

The proposed nickel maximum 30-day average effluent limit is given by:

$$(0.20\ mg/l)(475\ m3/kkg)\left(\frac{kg/m3}{1000\ mg/l}\right) = \frac{0.10\ kg\ of\ nickel}{kkg\ of\ TiO2}$$

The proposed nickel 24-hour maximum effluent limit is given by:

$$(0.37\ mg/l)(475\ m3/kkg)\left(\frac{kg/m3}{1000\ mg/l}\right) = \frac{0.18\ kg\ of\ nickel}{kkg\ of\ TiO2}$$

G. Zinc: The lower limit established by treatability studies, namely 0.5 mg/l, (Table 8-11) was used as the basis for the proposed 30-day average concentration limit because the observed average effluent concentration (Table 14-31) was considerably less. The variability factor ratio of 2.1 developed from the long-term data for Plant #559 for lead (Table

14-30) was used to estimate the proposed daily maximum concentration since similar performance with this treatment technology is expected. The calculations used to establish the concentration basis and effluent limitations are shown below:

The proposed zinc daily maximum concentration is given by:

$$(0.50\ mg/l)(2.1) = 1.1\ mg/l$$

The proposed zinc 30-day average effluent limit is given by:

$$(0.50\ mg/l)(475\ m3/kkg)\left(\frac{kg/m3}{1000\ mg/l}\right) = \frac{0.24\ kg\ of\ zinc}{kkg\ of\ TiO2}$$

The proposed zinc 24-hour maximum effluent limit is given by:

$$(1.1\ mg/l)(475\ m3/kkg)\left(\frac{kg/m3}{1000\ mg/l}\right) = \frac{0.52\ kg\ of\ zinc}{kkg\ of\ TiO2}$$

H. Arsenic: The proposed 30-day average concentration of 0.5 mg/l is based on the lower limit established by treatability studies for lime precipitation and settling (Table 8-11) because no long-term data for arsenic treatment is available. The proposed daily maximum concentration was estimated by multiplying the 30-day average concentration with a variability factor ratio of 1.9 developed for chromium from the long-term monitoring data for Plant #559. The calculations for the proposed concentrations and effluent limits are given below:

The proposed arsenic 24-hour maximum concentration is given by:

$$(0.50\ mg/l)(1.9) = 0.95\ mg/l$$

The proposed arsenic 30-day average effluent limit is given by:

$$(0.50\ mg/)(475\ m3/kkg)\left(\frac{kg/m3}{1000\ mg/l}\right) = \frac{0.24\ kg\ of\ arsenic}{kkg\ of\ TiO2}$$

The proposed arsenic 24-hour maximum effluent limit is given by:

$$(0.95\ mg/l)(475\ m3/kkg)\left(\frac{kg/m3}{1000\ mg/l}\right) = \frac{0.46\ kg\ of\ arsenic}{kkg\ of\ TiO2}$$

Summary - A summary of the proposed conventional, nonconventional, and toxic pollutant limitations for BPT are given in Table 14-32.

TABLE 14-32. PROPOSED LIMITATIONS
TITANIUM DIOXIDE SULFATE PROCESS

Best Practical Control Technology Currently Available
Waste Water Flow: 475 m3/kkg of TiO_2

Pollutant	Subcategory Performance (mg/l)	VFR (1)	Concentration Basis (mg/l) Max 30-day Avg	Concentration Basis (mg/l) 24-hr. Max	Effluent Limit (kg/kkg of TiO_2) Max 30-day Avg	Effluent Limit (kg/kkg of TiO_2) 24-hr. Max
Conventional and Nonconventional Pollutants						
Total Suspended Solids	21 (2)	3.6	64	230	30	110
Iron	0.62 (2)	3.4	2.5	8.5	1.2	4.1
Toxic Pollutants						
Antimony	0.80 (3)	1.9 (4)	0.80	1.5	0.38	0.71
Cadmium	0.06 (2)	1.6	0.15	0.24	0.070	0.11
Chromium	0.07 (2)	1.9	0.14	0.27	0.070	0.13
Copper	0.50 (3)	1.9 (4)	0.50	0.95	0.24	0.46
Lead	0.30 (3)	1.5 (5)	0.30	0.45	0.14	0.21
Nickel	0.20 (3)	1.9 (4)	0.20	0.37	0.10	0.18
Zinc	0.50 (3)	2.1 (5)	0.50	1.1	0.24	0.50
Arsenic	0.50 (3)	1.9	0.50	0.95	0.24	0.46

(1) VFR: Ratio of the 24-hour variability factor to the 30-day variability factor.

(2) Long-term average based on loading data and variability factors of plant #559 selected from Table 14-30.

(3) The lower limit of the literature treatability estimate (Table 8-11) is used as the basis for the 30-day average limitation.

(4) Variability factor ratio of chromium developed from the long-term data of plant #559 has been used (Table 14-30).

(5) Variability factor ratio estimated for this pollutant from long-term data of plant #559 has been used.

14.14.3 Basis for Proposed BCT Effluent Limitations

The BCT limitation (applicable only to TSS) was set equal to BPT because BAT is equal to BPT.

14.14.4 Basis for Proposed BAT Effluent Limitations

For BAT, the Agency is proposing limitations based on treatment consisting of Level 1 technology, and are the same as BPT. A treatment system requiring 55 percent recycle through use of soda ash precipitation was considered but rejected because its performance has not been demonstrated. The limitations proposed for BAT are given in Table 14-33.

14.14.5 Basis for Proposed New Source Performance Standards

Level 1 treatment technology (also proposed for BPT and BAT) is selected as the basis for NSPS limitations. A treatment system requiring 55 percent recycle through use of soda ash precipitation was considered but rejected because its performance has not been demonstrated. Compared to BAT, NSPS additionally limits pH, TSS and iron. The proposed NSPS limitations are given in Table 14-34.

14.14.6 Basis for Proposed Pretreatment Standards

Existing Sources

For pretreatment standards for Existing Sources (PSES), the Agency is proposing limitations based on BAT. The pollutants to be limited are iron, antimony, cadmium, chromium, copper, lead, nickel and zinc as indicated in Table 14-34.

New Sources

For pretreatment standards for New Sources (PSNS), the Agency is proposing limitations based on NSPS. The pollutants to be regulated are iron, antimony, cadmium, chromium, copper, lead, nickel and zinc as indicated in Table 14-34.

TABLE 14-33. PROPOSED LIMITATIONS
TITANIUM DIOXIDE SULFATE PROCESS

Best Available Technology
Waste Water Flow: 475 m^3/kkg of TiO_2

Pollutant	Subcategory Performance (1)	VFR (2)	Concentration Basis (mg/l) Max 30-day Avg	Concentration Basis (mg/l) 24-hour Max	Effluent Limit (kg/kkg of TiO_2) Max 30-day Avg	Effluent Limit (kg/kkg of TiO_2) 24-hour Max
Nonconventional Pollutants						
Iron (3)	0.62	3.4	2.5	8.5	1.2	4.1
Toxic Pollutants						
Antimony (3)	0.80	1.9	0.80	1.5	0.38	0.71
Cadmium (3)	0.060	1.6	0.15	0.24	0.070	0.11
Chromium (3)	0.070	1.9	0.14	0.27	0.070	0.13
Copper (3)	0.50	1.9	0.50	0.95	0.24	0.46
Lead (3)	0.30	1.5	0.30	0.45	0.14	0.21
Nickel (3)	0.20	1.9	0.20	0.37	0.10	0.18
Zinc (3)	0.50	2.1	0.50	1.1	0.24	0.52
Arsenic	0.50	1.9	0.50	0.95	0.24	0.46

(1) Proposed Limitations for BPT Table 14-32

(2) VFR: Ratio of the 24-hour variability factor to the 30-day variability factor.

(3) Also applicable for PSES and PSNS limitations.

TABLE 14-34. PROPOSED LIMITATIONS
TITANIUM DIOXIDE SULFATE PROCESS

New Source Performance Standards
Waste Water Flow: 475 m^3/kkg of TiO_2

Pollutant	Subcategory Performance (1)	VFR (2)	Concentration Basis, (mg/l) Max 30-day Avg	24-hour Max	Effluent Limit (kg/kkg of TiO_2) Max 30-day Avg	24-hour Max
Conventional and Nonconventional Pollutants						
Total Suspended Solids	21	3.6	64	230	30	110
Iron	0.62	3.4	2.5	8.5	1.2	4.1
Toxic Pollutants						
Antimony	0.80	1.9	0.80	1.5	0.38	0.71
Cadmium	0.060	1.6	0.15	0.24	0.070	0.11
Chromium	0.070	1.9	0.14	0.27	0.070	0.13
Copper	0.50	1.9	0.50	0.95	0.24	0.45
Lead	0.30	1.5	0.30	0.45	0.14	0.21
Nickel	0.20	1.9	0.20	0.37	0.10	0.18
Zinc	0.50	2.1	0.50	1.1	0.24	0.52
Arsenic	0.50	1.9	0.50	0.95	0.24	0.46

(1) For basis see proposed limitation for BPT Table-32.

(2) VFR: Ratio of the 24-hour variability factor to the 30-day variability factor.

14.15 TITANIUM DIOXIDE - CHLORIDE ILMENITE PROCESS INDUSTRY PROFILE

14.15.1 General Description

Total subcategory production capacity is given in Table 14-35 Profile Data Summary. The 308 data available for the TiO2 Subcategory does not adequately cover the one-step chloride ilmenite process; however, supplementary information has been submitted by industry (55). The status of regulations is presented in Table 14-2. Additional information on the chloride process industry is given in Section 14.1.

14.15.2 General Process Description and Raw Materials

For the manufacture of titanium dioxide by the combined ore benefication-chloride process, a generalized process flow diagram including the waste streams is shown in Figure 14-15.

The direct use of ilmenite ore for the manufacture of titanium dioxide pigments requires the application of either the sulfate process or the one-step ore beneficiation/chlorination process which is referred to in this report as the chloride-ilmenite process. Processes which involve a separate ore beneficiation step (either at the plant or at the ore source) resulting in an upgraded or a synthetic rutile product to be used as feed material for a chloride process would not be classified as a chloride-ilmenite process. A separate ore beneficiation process would fall within the Ore Mining and Dressing Category for regulatory purposes, and the manufacture of TiO2 from an upgraded ilmenite or synthetic rutile would be in the same classification as a chloride process using natural rutile ore.

The central feature of the chloride-ilmenite process is a fluidized bed reactor, referred to as the chlorinator, which receives the ore, coke, and chlorine. For any given ilmenite ore composition, the differential rates of the various metal chlorination reactions taking place simultaneously in the chlorinator make impossible any clear distinction between ore beneficiation and titanium tetrachloride formation steps. The reaction mixture composition is further complicated by recycling recovered ore from the quench tower back to the chlorinator. Thus, the wastes generated by the process are not separable into beneficiation wastes and chlorination wastes. The chlorinator acts as the primary source of concentrated acidic wastes which are collected for treatment and disposal from the ore recovery and gas scrubber units.

TABLE 14-35 - SUBCATEGORY PROFILE DATA SUMMARY

SUBCATEGORY	TITANIUM DIOXIDE Chloride Process (Ilmenite Ore)
Total subcategory capacity rate	NA
Total subcategory production rate	522,775 kkg/year (1)
Number of plants in this subcategory	4
308 Data on file for	3
With total capacity of	495,500 kkg/year
With total production of	NA
Representing capacity	95 percent
Representing production	Unknown; wide variation in production
Plant production range:	
Minimum	75 kkg/year
maximum	228 kkg/year
Average production	151.50 kkg/year
Median production	NA
Average capacity utilization	NA
Plant age range:	
Minimum	NA
Maximum	NA
Waste water flow range:	
Minimum	8400 cubic meters/day
Maximum	42,000 cubic meters/day
Volume per unit product:	
Minimum	29 cubic meters/kkg
Maximum	140 cubic meters/kkg

(1) Capacity included in Table 14-1.

Sources of data are Stanford Research Institute, Directory of Chemical Producers, U.S.A., 1977, U.S. Department of Commerce, Current Industrial Reports, December 1977; Energy and Environmental Analysis, Inc., Draft Report, "Preliminary Economic Assessment of Effluent Limitations in the Inorganic Chemical Industry," June, 1978, and "Economic Analysis of Proposed Revised Effluent Guidelines and Standards for the Inorganic Chemicals Industry ,"March, 1980.

NA - not available

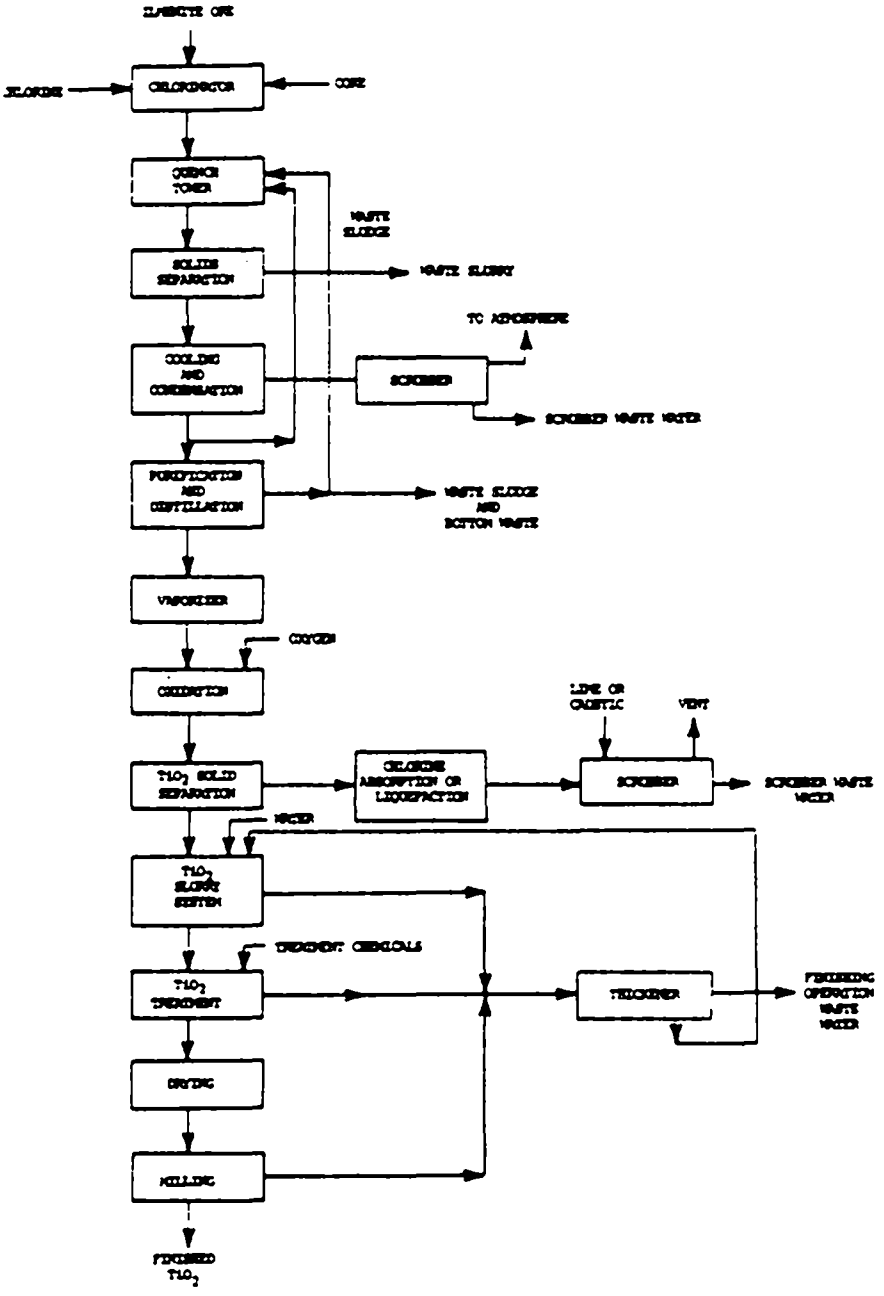

Figure 14-15. General process flow diagram of the titanium tetrachloride portion of a titanium dioxide plant using the chloride-ilmenite process.

Once the $TiCl_4$ intermediate has been isolated and purified, the production of TiO_2 is basically the same as described in Section 14.1.2 for the ordinary chloride process.

14.16 WATER USE AND WASTE SOURCE CHARACTERISTICS

14.16.1 Water Use

Water is used in the manufacture of titanium dioxide by the chloride-ilmenite process for noncontact cooling, process reactions, air emission control, product treatment, washing and transport operations. Table 14-36 presents a summary of water use data for three plants.

14.16.2 Waste Sources

The concentrated process waste stream generated by the chloride-ilmenite process contains the HCl generated in the chlorination process along with iron and other metal chlorides in solution. The waste stream also carries the spent coke and unreacted ore solids in suspension (TSS).

The other major sources of process contact waste water are combined in the dilute process waste stream. These wastes are generated in the product finishing operations which include the application of surface coatings (usually alumina or silica) to the titanium dioxide pigment particles, and the final dewatering, washing, drying, and sizing of the product. The application of surface coatings requires the use of acid and alkali to maintain the proper pH range for chemical treatment of the TiO_2 slurry. The resulting salts of neutralization are washed from the product. These dilute acid wastes are high in total dissolved solids and contain suspended TiO_2 from the finishing operations.

Table 14-37 summarizes the average raw waste loads carried by the concentrated and dilute process waste streams at three plants.

In Table 14-36, considerable differences in water usage are revealed among the three plants. These differences are largely a reflection of plant age in the sense that the feasibility and economics of effective contact/noncontact waste water segregation and recycling are highly dependent on the original plant design and facilities layout. Obviously, Plant #713 is a new plant which incorporates modern concepts of water use and waste handling practices and is therefore used as the basis for the chloride-ilmenite NSPS. The high flow plant, Plant #237, is an older, existing facility in

TABLE 14-36. AVERAGE WATER USAGE FOR TiO_2 PRODUCTION BY THE CHLORIDE -ILMENITE PROCESS

Use	Plant #237	Plant #550	Plant #713
		(m^3/kkg of TiO_2)	
Noncontact Cooling	73-140	330-390	15-16
Process Contact and Cleanup	100-140 (1)	47- 59	29-33 (2)
Noncontact Ancillary Uses (Boilers, Sanitary, etc.)	9- 11	6- 7	5- 6

Source of data, (55).

(1) The average total flow of 120 m^3/kkg is used as the basis for BPT.

(2) The average flow of 31m^3/kkg is used as the basis for NSPS.

TABLE 14-37. AVERAGE RAW WASTE LOADS FOR TiO_2 PRODUCTION BY THE CHLORIDE - ILMENITE PROCESS

	Plant #237		Plant #550		Plant #173*	
	Conc. Process Stream (kg/kkg of TiO_2)	Dil. Process Stream (kg/kkg of TiO_2)	Conc. Process Stream (kg/kkg of TiO_2)	Dil. Process Stream (kg/kkg of TiO_2)	Conc. Process Stream (kg/kkg of TiO_2)	Dil. Process Stream (kg/kkg of TiO_2)
TSS	100-150	20-35	150-200	15-20	200-240	5-20
HCl	200-230	8-10	250-300	0.5-0.8	120-240	Negl.
$FeCl_3$	900-1150	1-3	1000-1200	2-3	1000-1200	Negl.
Other metal chlorides	140-155	Negl.	190-210	Negl.	120-150	Negl.

* These values are estimated for a new plant prior to start-up.

Negl. - Negligible (< 0.5)

which process contact water usage is by far the highest of the three plants. Although some reductions in the volume and the relative proportion of contact water usage may be feasible, the economic incentives are lacking and it is unlikely that older plants will be extensively modified to improve water use patterns alone. This segment was not further subdivided because the basic process is the same.

14.17 DESCRIPTION OF PLANTS VISITED AND SAMPLED

14.17.1 Screening

Plant #550 was visited during the screening phase of the sampling program. This plant is capable of producing titanium dioxide from ilmenite ore by means of a one-step, integrated beneficiation/ chlorination process. However, at the time of the sampling visit, the plant was not using ilmenite ore, but rather an upgraded ore which was similar in quality to rutile. For this reason, the sampling results cannot be considered representative of a chloride-ilmenite process and are not presented in this report.

Plant #550 disposes of its concentrated acid waste by deep well injection. These ferric chloride laden acidic wastes are collected first in a system of four settling ponds where the bulk of the solids are removed. Dredging of the ponds is a continuous operation and the sludges are landfilled in an adjacent, on-site area. Unlike the wastes from the TiO2-Sulfate Process, the iron content of the concentrated wastes from the Chloride-Ilmenite Process is largely in the ferric state after chlorination and probably would not require aeration if these wastes were treated in a conventional BPT system utilizing neutralization and settling. After settling and clarification, the acidic wastes at Plant #550 are deep well injected without prior neutralization. The other process waste waters from this plant include the dilute acid wastes from the scrubbers and white water from the finishing operations. The dilute acid wastes are equalized, neutralized with caustic and sent to a primary settling pond, a polishing pond, and finally a clear pool prior to discharge. The white water from product finishing, first goes to a slip pond for pigment recovery before mixing with the neutralized dilute acid wastes in the primary settling pond. Noncontact cooling water and sanitary wastes are handled separately.

14.17.2 Verification Program

No verification program was carried out in the subcategory since the only other nominally chloride-ilmenite plant in operation during the sampling program was Plant #237. However, this plant was not using ilmenite ore during the period of study and therefore was not visited or sampled.

14.17.3 Toxic Pollutant Concentration

Because neither of the two operating TiO2 chloride-ilmenite process plants were actually using ilmenite ore at the time when the sampling program was being conducted, the toxic pollutant characteristics of this process have been estimated on the basis of sampling results from the TiO2-sulfate process at Plant #559 where a typical ilmenite was being used. The process waste water characteristics of the two processes are expected to be similar because the sources of iron and toxic metal pollutants are related to the use of the same type of ore material. This segment was not combined with the sulfate process segment because the manufacturing process is different. The basic difference between the two processes is the chemical agent used in the reaction with the ore and this has a significant impact on the conventional and nonconventional pollutant parameters, such as acidity, suspended and dissolved solids, sulfate, chloride, and iron (ferrous vs. ferric).

Thus, the toxic pollutants found at potentially significant levels in the raw waste during sampling of Titanium Dioxide Sulfate process plants (Section 14.10.3) are also presented here to be used as the basis for evaluating the pollutant characteristics of the Titanium Dioxide-Chloride Ilmenite process.

Pollutant	Maximum Concentrations Observed (ug/l) Screening (Plants #555 & #559)	Verification (Plant #559)
Chromium	124,000	31,000
Nickel	6,400	1,300
Zinc	3,800	17,000
Lead	3,700	5,200
Copper	1,500	1,000
Cadmium	340	12
Selenium	340	< 20
Antimony	20	1,400
Thallium	19	41
Arsenic	11	340

The only organic toxic pollutant found during the screening program was phenol which was observed at only one of the two plants sampled. The maximum raw waste concentration of phenol was 0.020 mg/l, however, the raw water source for the plant contained as much as 0.007 mg/l. Therefore, phenol is not considered a significant or process-related pollutant because it is well below the concentration which is treatable.

Daily raw waste loads were calculated from the flow rates measured or estimated at the time of sampling and the measured pollutant concentrations. That is,

$$\text{Daily loading (as kg of pollutant per day)} = \frac{(C)(Q)}{1000}$$

Where the concentration (C) of the pollutant is expressed in units of mg/l. (Note: 1 kg/m3 = 1000 mg/l), and the flow rate (Q) is expressed in units of m3/day (m3, a cubic meter, is equal to 264 U.S. gallons).

Similarly, the unit loadings were calculated from the reported Ti02 production rate (P), the waste stream flow rate (Q), and the measured pollutant concentration (C).

$$\text{Unit loading (as kg of pollutant per kkg of Ti02)} = \frac{(C)(Q)}{1000(P)}$$

where C and Q are expressed in the same units described above, and the production (P) is expressed in units of kkg/day (kkg is 1000 kg, a metric ton, which is equal to 2205 lbs).

A summary of daily and unit per unit of production raw waste loads for the plants sampled is presented in Table 14-38 and the individual plant averages are given in Table 14-39.

The estimated total annual raw waste water load of toxic pollutants generated by the Chloride-Ilmenite Process is given below.

Pollutant	Total Annual Raw Waste Water Load (kg/year)
Chromium	1,050,000
Nickel	42,000
Zinc	178,000
Lead	94,000
Copper	44,000
Cadmium	9,900
Antimony	58,000
Thallium	2,900
Arsenic	99,000
Selenium	16,000

TABLE 14-38. SUMMARY OF RAW WASTE LOADINGS FOUND IN SCREENING AND VERIFICATION SAMPLING

SUBCATEGORY TITANIUM DIOXIDE - SULFATE PROCESS (Applied to Chloride Ilmenite Process)

Pollutant	Loading Range (kg/day) Minimum	Maximum	Unit Loading (kg/kkg) Minimum	Average	Maximum	No. of Plants (1)
Priority						
Antimony	5.0	28	0.032	0.11	0.22	3
Arsenic	1.9	4.0	0.012	0.19	0.032	3
Cadmium	0.068	7.2	0.00044	0.019	0.057	3
Chromium	140	530	1.1	2.0	3.4	3
Copper	8.2	19	0.065	0.085	0.12	3
Lead	3.0	65	0.024	0.18	0.42	3
Nickel	3.7	23	0.029	0.080	0.15	3
Selenium	7.6	9.5	0.0020	0.031	0.06	2
Thallium	0.47	1.3	0.0030	0.0055	0.0080	2
Zinc	1.8	85	0.014	0.34	0.55	3
Conventional						
TSS				320		1
Iron				600		1

(1) - Data are taken only from those plants where pollutants were found above detection limits, or in the case of TSS and Iron, where data are available.

TABLE 14-39. TOXIC POLLUTANT AVERAGE RAW WASTE LOADS AND CONCENTRATIONS

SUBCATEGORY TITANIUM DIOXIDE - Sulfate Process (Applied to Chloride Ilmenite Process)

	Screening				Verification	
	Plant #555		Plant #559		Plant #559	
	(mg/l)	(kg/kkg)	(mg/l)	(kg/kkg)	(mg/l)	(kg/kkg)
Antimony	0.77	0.22	0.16	0.080	0.074	0.032
Arsenic	0.11	0.032	0.029	0.014	0.028	0.012
Cadmium	0.29	0.057	0.002	0.0009	0.0010	0.00044
Chromium	3.8	1.1	7.0	3.4	3.1	1.4
Copper	0.20	0.065	0.25	0.12	11.	0.070
Lead	0.075	0.024	0.20	0.10	0.96	0.42
Nickel	0.091	0.029	0.31	0.15	0.14	0.061
Selenium	NA	< 0.06	NA	NA	0.005	0.002
Thallium	NA	NA	0.02	0.008	0.007	0.003
Zinc	0.088	0.014	1.1	0.55	1.04	0.45

NA = Not Available

Section 5.1.2 of this report described the scope and methodology of the sampling program and Section 14.10.3 indicates the size of the analytical data base on toxic pollutants for the sulfate process segment. This is the basis for selecting pollutants of concern in the chloride-ilmenite segment of the TiO2 subcategory.

14.18 POLLUTION ABATEMENT OPTIONS

14.18.1 Toxic Pollutants of Concern

Rationale for selection of the toxic pollutants of concern is presented in Section 14.11.1 for the sulfate process industry. The sampling data evaluations resulted in the selection of chromium, zinc, nickel, lead, copper, antimony, arsenic, and cadmium on the basis of raw waste maximum concentrations and total annual industry loads.

The major impurity found in the various grades of raw material is ferrous iron as shown in Table 14-19. In the sulfate process the unwanted iron remains largely in the ferrous state and may be crystallized out of the acid waste streams and sold as coppers (ferrous sulfate). In the chloride-ilmenite process, the same ore impurity is largely oxidized to the ferric state during the chlorination step. This appears in the acid waste streams as ferric chloride ($FeCl_3$) in the amounts indicated in Table 14-38.

Iron, in either the ferrous or ferric state, is classified as a nonconventional pollutant. However, when present in large amounts, such as it is in the TiO2 industry, it can be a considerable aid to toxic metal removal in treatment systems designed to take advantage of coprecipitation processes.

14.18.2 Process Modifications and Technology Transfer Options

The comments made in regard to the Titanium Dioxide-Chloride Process for rutile and upgraded ores in Section 14.4.2 are generally applicable to the Chloride-Ilmenite Process.

14.18.3 Best Management Practices

Storm water runoff from the plant site should be collected and sent to the treatment facility for the removal of suspended solids.

14.18.4 Prevailing Control and Treatment Practices

The three chloride-ilmenite plants from which the water use and waste source information was obtained all handle the disposal of the concentrated process waste stream separately by either ocean dumping or deep well injection. The availability of either of these methods of disposal for a particular plant is a matter handled on a case-by- case basis by the appropriate regulatory agencies from which various approvals and permits are required under the Marine Protection, Research and Sanctuaries Act of 1972 for ocean disposal or by state and local authorities for deep well injection. For the purpose of developing the model plant concept and specifying a generally applicable waste treatment technology for the chloride-ilmenite industry, for the purpose of this study the assumption has been made that neither the ocean dumping nor the deep well injection disposal options are generally available, and that the concentrated process waste stream is, therefore, included in the raw waste influent to the model plant waste water treatment system.

In practice, one plant disposes of the entire metal chloride, HCl, and TSS waste by ocean dumping. The remainder of the plants dispose of the concentrated waste by deep well injection after use of surface lagoons for removal of settleable solids.

The dilute process waste streams are segregated to the extent possible from noncontact sources and treated in conventional in-plant systems utilizing equalization and spill diversion facilities followed by lime neutralization/coagulation, solid separation in a settling pond, and final discharge of the treated effluent. Chemical coagulating agents such as ferric chloride and alum may be used either before or after pH control as an aid in the removal of metal hydroxides and other suspended solids.

14.18.5 Advanced Treatment Technology

Advanced treatment technology options for in-plant treatment of process wastes have been evaluated as possible polishing step additions to a conventional system for equalization, neutralization, and clarification in ponds prior to discharge. Such options include:

1. Aeration for a) decarbonization if limestone is used for neutralization, and b) ferrite coprecipitation, assuming that sufficient ferrous iron is aleady present or is added to the system as needed (the latter may also be accomplished by adding scrap iron to the acid wastes).

2. An alkaline precipitation step under optimum conditions for metal hydroxide precipitation, i.e. pH 9-10.

3. Dual-media filtration for additional removal of suspended solids including toxic metal hydroxides.

4. Sulfide precipitation for additional toxic metal removal followed by filtration.

5. Other metal removal technologies including xanthate precipitation, ion exchange, and membrane applications, all of which were regarded as categorically inappropriate from a practical and economic point of view.

14.19 SELECTION OF APPROPRIATE TECHNOLOGY AND EQUIPMENT

14.19.1 Technologies for Different Treatment Levels

Level 1 (BPT)

Figure 14-16 shows the model treatment system chosen for this subcategory. Calcium carbonate (limestone) is used to neutralize the concentrated acid waste stream. The priority pollutants are precipitated in the first stage thickeners. Aeration then oxidizes any ferrous iron present and removes CO_2 before mixing with dilute and miscellaneous plant wastes. The combined stream is then given lime treatment to pH 9-10 for additional toxic metals removal and settled in polishing lagoons before discharge. This treatment system is patterned after the model plant BPT waste water treatment technology for the sulfate process as presented in this report.

This technology was used as the treatment model for BPT regulations because of the similarity of wastes to those in the TiO_2-Sulfate Process industry. This technology is available and, to some degree, already employed in the TiO_2-Chloride-Ilmenite industry. The proposed BPT treatment would remove greater than 95 percent of the major pollutants of concern including toxic metals according to preliminary treatability estimates.

Level 2 (NSPS)

Level 2 treatment adds dual-media filtration to the Level 1 technology for additional removal of suspended solids and toxic metal hydroxides following the alkaline precipitation and settling steps. The flow diagram for Level 2 is shown in Figure 14-17. This level of treatment was

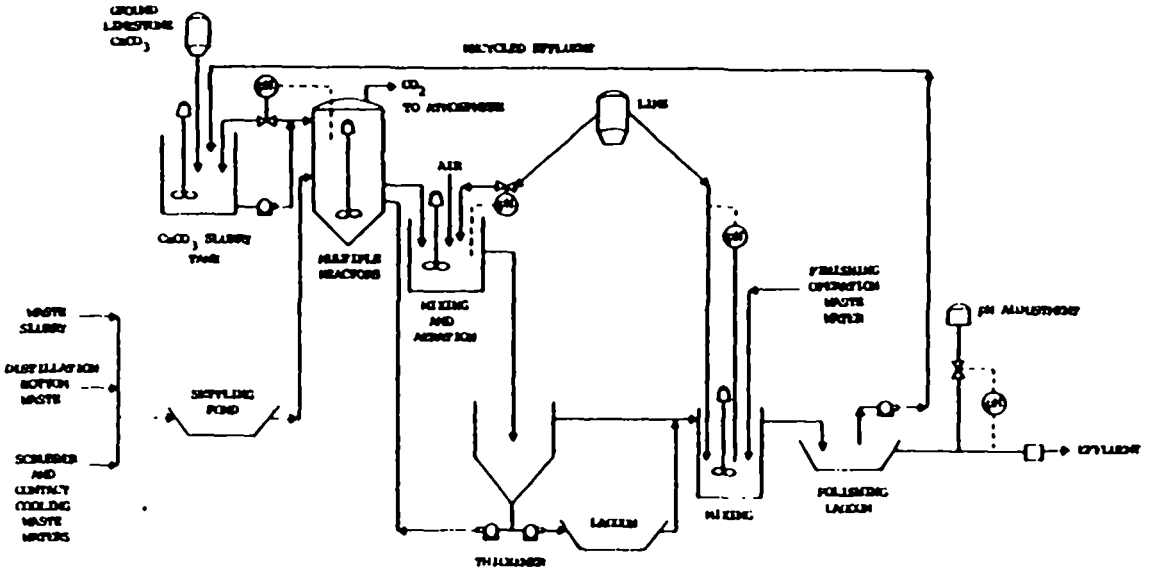

Figure 14-16. Level 1 waste water treatment for titanium dioxide - chloride (ilmenite ore) process.

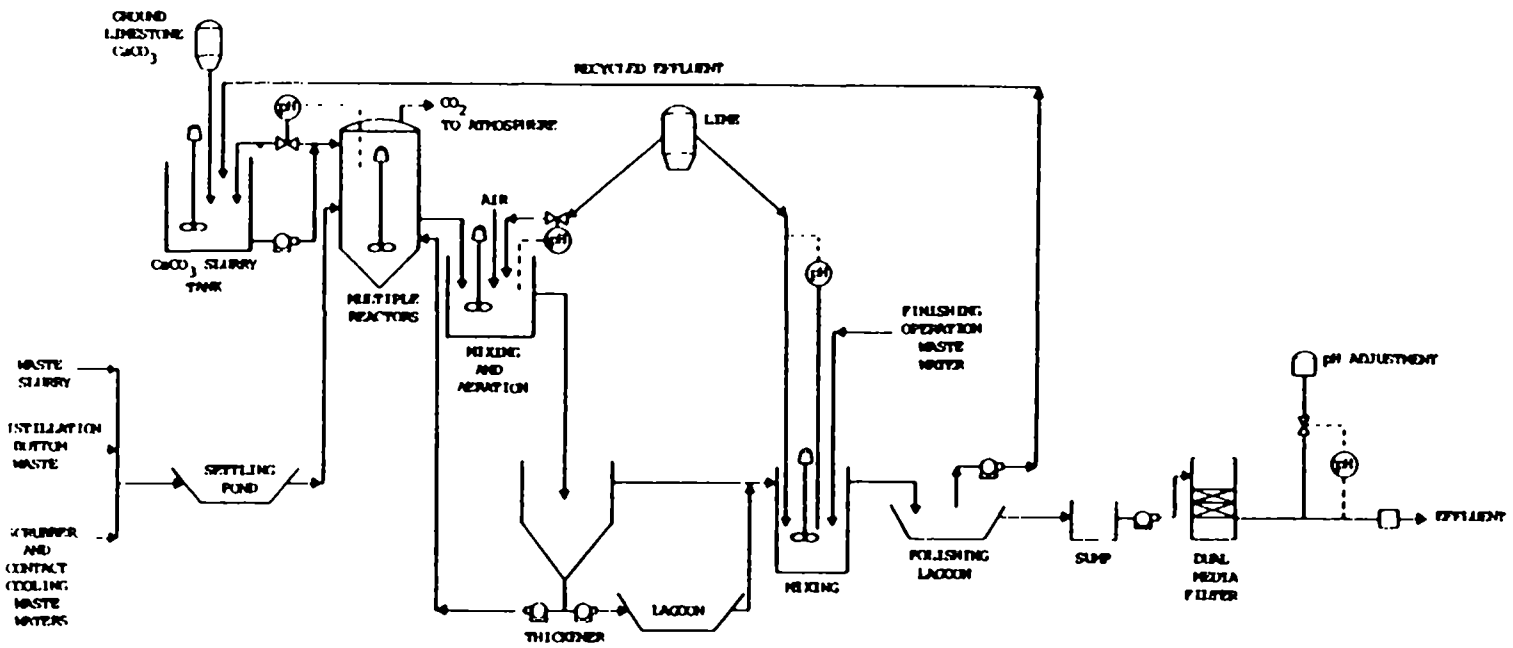

Figure 14-17. Level 2 waste water treatment for titanium dioxide - chloride (ilmenite ore) process.

selected as the basis for NSPS because it provides a relatively economical method for removing additional toxic metals.

14.19.2 Equipment for Different Treatment Levels

Equipment Functions

Unlike treatment of the waste waters from the TiO2 Sulfate Process, limestone neutralization of the Chloride-Ilmenite Process waste waters does not generate large quantities of solids (e.g., gypsum) which require mechanized separation and transfer to sizable on-site or off-site disposal areas. The solids that are generated from TSS and metal precipitate separation can be collected in moderate sized lagoons and periodically transferred to appropriate chemical landfill disposal sites in accordance with the Resource Conservation and Recovery Act (RCRA) (as amended, 42 USC 6901, et seq.). The Level 1 treatment model includes rail car deliveries of ground limestone amd line, bucket elevators, storage bins, multiple reactors and chemical feeders, mechanical aerators and thickeners for solids removal. The clarified overflow is treated with lime for additional toxic metals removal and settled in a one-day polishing pond prior to final pH adjustment, monitoring and discharge.

Chemicals and Chemical Handling

First stage neutralization utilizes ground limestone while lime is used for second stage neutralization and final alkaline precipitation. Oxygen is supplied as air and treatment chemicals may be added as required for removal of precipitated metals and other suspended solids. Aside from the large scale bulk chemical handling requirements for limestone and lime, there are no particular hazards involved.

Disposal of Solids

Periodic removal of solids from settling impoundments will require compliance with RCRA regulations as applicable to on-site or off-site chemical disposal site operation.

14.20 TREATMENT COST ESTIMATES

14.20.1 General Discussion

Preliminary cost estimates hae been prepared for Level 1 (BPT) treatment only. Final cost estimates, including those for Level 2 (NSPS) will be prepared prior to final promulgation of the regulations. The model plant specifications given below were utilized for preliminary cost estimating and for development of the proposed regulations.

Production

There are three plants at different locations producing (or capable of producing) titanium dioxide by the combined ilmenite ore beneficiation - chlorination process. Annual capacity of these plants varies from 136,000 metric tons to 207,000 metric tons. For treatment cost estimates, four production levels were selected. These were 35,000 kkg/year, 70,000 kkg/year, 113,750 kkg/year, and 157,500 kkg/year.

Waste Water Flows

Waste water is typically segregated into two streams; strong acidic waste water flow from beneficiation -chlorination of ilmenite ore and air emission scrubbing facilities, and the other waste water from process reactions, washings, product transport, cooling tower blowdown, water treatment blowdown, and other operations. For the model plants, a unit flow of 6 m3/kkg of product for the concentrated acidic waste water and 114 m3/kkg of product for the dilute wastes is used. The treatment system is designed to handle a total flow of 120 m3/kkg of product (Table 14-36).

For the NSPS model plant, a unit flow of 6 m3/kkg of product for the concentrated acidic waste water is used. Because of improved design which allows for recycle systems and more efficient process water utilization, dilute waste water is considerably reduced. The total combined waste water flow of 31 m3/kkg of product is used (Table 14-36). The treatment system is Level 2 which is BPT plus dual media filtration.

Pollutant Load

The principal pollutants occurring in the waste waters are TSS, iron, chromium, zinc, and hydrochloric acid. For the model plants, the following unit pollutant loads have been considered:

TSS	175 kg/kkg of TiO2
HCl	230 kg/kkg of TiO2
Iron	375 kg/kkg of TiO2
Chromium	1.4 kg/kkg of TiO2
Zinc	0.5 kg/kkg of TiO2

The loading values for TSS, HCl, and iron are based on data submitted by industry on the chloride-ilmenite process. The chromium loading is an estimated average derived from a wide range of ilmenite ore qualities and the zinc loading is taken from the screening and verification data on the TiO2 sulfate process.

Chemical Usage

In the model BPT system, powdered limestone is used for first stage neutralization of strong acidic waste flow at the unit rate of 302 kg/kkg of TiO2. Pebble lime (CaO) is used for second stage neutralization of the mixed acidic and other waste waters and final neutralization of the total combined flows. Lime is used at the unit rate of 42 kg/kkg of TiO2.

Solid Waste

The solids produced in the treatment facility consist of iron hydroxides, the original suspended solids introduced in the influent and solids derived from the treatment chemicals added for neutralization. The total solids produced in the model plant are assumed to be 990 kg/kkg of TiO2.

14.20.2 Model Plant Control and Treatment Costs

The estimated costs for four models having different production levels are given in Tables 14-40, 14-41, 14-42, and 14-43.

Table 14-44 presents a summary of the unit cost distribution between amortization and operation and maintenance cost components at different productions at the BPT level of treatment.

For existing sources at the first level of treatment, the disposal of sludges is on-site, hence land requirements are fairly large. Amortization, chemicals, labor, and residual waste disposal costs have significant impact on the annual costs.

The unit waste flow of 6 m3/kkg of product for the concentrated acidic waste water stream is the same for BPT and NSPS systems. The NSPS treatment technology is the same as BPT, but the total combined acidic and dilute waste water

TABLE 14-40. MODEL PLANT TREATMENT COSTS

Subcategory	TITANIUM DIOXIDE Chloride-Il. Ore	
Production	35,000 metric tons per year	(38,587 tons per year)
	100 metric tons per day	(110 tons per day)
Waste water flow	12,000 cubic meters per day.	

		LEVEL OF TREATMENT*
A.	INVESTMENT COST	FIRST
	Construction	$300,500
	Equipment in place, including piping, fittings, electrical work and controls.....	696,500
	Monitoring equipment in place.....	9,000
	Engineering design and inspection.....	201,200
	Incidentals, overhead, fees, contingencies...	201,200
	Land.....	252,000
	TOTAL INVESTMENT COST	$1,660,400
B.	OPERATION AND MAINTENANCE COST	
	Labor and supervision.	$336,000
	Energy.....	31,000
	Chemicals.....	260,000
	Maintenance.....	140,840
	Taxes and insurance...	49,812
	Residual waste disposal.....	105,000
	Monitoring, analysis and reporting.....	15,000
	TOTAL OPERATION AND MAINTENANCE COST	$937,652
C.	AMORTIZATION OF INVESTMENT COST	$229,146
	TOTAL ANNUAL COST	$1,166,798

*First level represents the base cost of treatment system.
Other levels represent the incremental cost above base cost.

TABLE 14-41. MODEL PLANT TREATMENT COSTS

Subcategory	TITANIUM DIOXIDE Chloride-Il. Ore	
Production	70,000 metric tons per year	(77,175 tons per year)
	200 metric tons per day	(220 tons per day)
Waste water flow	24,000 cubic meters per day.	

	LEVEL OF TREATMENT *
A. INVESTMENT COST	FIRST
Construction.....	$387,500
Equipment in place, including piping, fittings, electrical work and controls.....	865,000
Monitoring equipment in place.....	9,000
Engineering design and inspection.....	252,300
Incidentals, overhead, fees, contingencies....	252,300
Land.....	492,000
TOTAL INVESTMENT COST	$2,258,100
B. OPERATION AND MAINTENANCE COST	
Labor and supervision.	$504,000
Energy.....	43,000
Chemicals.....	510,000
Maintenance.....	176,610
Taxes and insurance...	67,743
Residual waste disposal.....	105,000
Monitoring, analysis and reporting.....	15,000
TOTAL OPERATION AND MAINTENANCE COST	$1,421,353
C. AMORTIZATION OF INVESTMENT COST	$287,344
TOTAL ANNUAL COST	$1,708,697

*First level represents the base cost of treatment system. Other levels represent the incremental cost above base cost.

TABLE 14-42. MODEL PLANT TREATMENT COSTS

Subcategory TITANIUM DIOXIDE Chloride-Il. Ore

Production 113,750 metric tons per year (125,409 tons per year)
325 metric tons per day (358 tons per day)
Waste water flow 39,000 cubic meters per day.

	LEVEL OF TREATMENT*
A. INVESTMENT COST	FIRST
Construction.....	$508,000
Equipment in place, including piping, fittings, electrical work and controls.....	1,179,500
Monitoring equipment in place.....	9,000
Engineering design and inspection.....	339,300
Incidentals, overhead, fees, contingencies...	339,300
Land.....	780,000
TOTAL INVESTMENT COST	$3,155,100
B. OPERATION AND MAINTENANCE COST	
Labor and supervision.	$588,000
Energy.....	62,000
Chemicals.....	823,000
Maintenance.....	237,510
Taxes and insurance...	94,653
Residual waste disposal.....	210,000
Monitoring, analysis and reporting.....	15,000
TOTAL OPERATION AND MAINTENANCE COST	$2,030,163
C. AMORTIZATION OF INVESTMENT COST	$386,428
TOTAL ANNUAL COST	$2,416,591

* First level represents the base cost of treatment system. Other levels represent the incremental cost above base cost.

TABLE 14-43. MODEL PLANT TREATMENT COSTS

Subcategory TITANIUM DIOXIDE Chloride-Il. Ore

Production	157,500 metric tons per year	(173,643 tons per year)
	450 metric tons per day	(496 tons per day)
Waste water flow	54,000 cubic meters per day.	

	LEVEL OF TREATMENT*
A. INVESTMENT COST	FIRST
Construction.....	$638,000
Equipment in place, including piping, fittings, electrical work and controls.....	1,356,000
Monitoring equipment in place.....	9,000
Engineering design and inspection.....	400,600
Incidentals, overhead fees, contingencies.....	400,600
Land.....	1,080,000
TOTAL INVESTMENT COST	$3,884,200
B. OPERATION AND MAINTENANCE COST	
Labor and supervision.	$588,000
Energy.....	71,000
Chemicals.....	1,141,000
Maintenance.....	280,420
Taxes and insurance...	116,526
Residual waste disposal.....	210,000
Monitoring, analysis and reporting.....	15,000
TOTAL OPERATION AND MAINTENANCE COST	$2,421,946
C. AMORTIZATION OF INVESTMENT COST	$456,243
TOTAL ANNUAL COST	$2,878,189

*First level represents the base cost of treatment system.
Other levels represent the incremental cost above base cost.

TABLE 14-44. MODEL PLANT TREATMENT COSTS

Subcategory TITANIUM DIOXIDE Chloride-Il. Ore

	PRODUCTION (kkg/yr)	FLOW (m^3/day)	Annual Treatment Costs ($/kkg) LEVEL OF TREATMENT FIRST	SECOND	THIRD	FOURTH
Annual Operation and Maintenance	35,000	12,000	26.79	Not Applicable		
	70,000	24,000	20.31			
	113,750	39,000	17.85			
	157,500	54,000	15.38			
Annual Amortization	35,000	12,000	6.55			
	70,000	24,000	4.10			
	113,750	39,000	3.40			
	157,500	54,000	2.90			
Total Cost	35,000	12,000	33.34			
	70,000	24,000	24.41			
	113,750	39,000	21.24			
	157,500	54,000	18.27			

flow for NSPS system is much less than BPT model; however, the reduced flow has negligible impact on costs because the unit waste loads are the same. There is insignificant difference in the estimated total annual costs per kkg of product between BPT and NSPS levels of treatment for the model plant designs.

14.21 BASIS FOR REGULATIONS

14.21.1 Evaluation of BPT Treatment Practices

The prevailing control and treatment practices in the TiO2 Chloride-Ilmenite industry have been reviewed in Section 14.18.4. For the purpose of regulations development, it has been assumed that neither ocean dumping nor deep well injection methods are generally available as disposal options for all or any portion of the process-related wastes. Thus, treatment technology used in the TiO2-Sulfate Process Segment of the industry has been used as the basis for the proposed regulations.

14.21.2 Basis for Proposed BPT Effluent Limitation

Technology Basis

The Agency is proposing BPT limitations based on technology used in the TiO2-Sulfate Process industry (Section 14.14.2) involving equalization, limestone neutralization, clarification, aeration, alkaline precipitation, and settling followed by final pH adjustment and discharge. The rationale for the selection of Level 1 technology is given in Section 14.19.1.

Flow Basis

The BPT model plant flow rate is based on the reported average process contact and clean up waste water flow at Plant #237 of 120 m3/kkg as indicated in Table 14-36.

Selection of Pollutants to be Regulated

The selection of pollutants to be regulated in the TiO2 Chloride-Ilmenite industry is based on the analysis of raw waste maximum concentrations and total industry loadings as presented in Section 14.3.3. The significant toxic pollutants include:

Chromium
Zinc
Nickel
Lead
Copper
Antimony
Arsenic
Cadmium

Each of these pollutants was present at least once in raw waste water at a maximum concentration level regarded as treatable in accordance with the appropriate treatability estimates presented in Table 8-11. Although arsenic is a borderline case with an observed maximum of 0.34 mg/l, it is regarded as a candidate for regulation based on alkaline precipitation technology. All of the other pollutants identified here as significant are definately treatable by this technology.

This selection follows the same logic presented in Section 14.14.2 for the TiO2-Sulfite Process. At the BPT level, the Agency is also proposing limitations on Total Suspended Solids (TSS) and iron which are classified as conventional and nonconventional pollutants, respectively.

Conventional and nonconventional parameters -

A. pH: The treated effluent is to be controlled within the range of pH 6.0 to 9.0. This limitation is based on the data presented in Appendix B of this report and the JRB study (52).

B. TSS and iron: The analysis of long term monitoring data from Plant #559 (Table 14-30) indicates an achievable long-term average of 21 mg/l for TSS and 0.62 mg/l for iron (total).

For TSS, the proposed maximum 30-day average limitation is derived from the long term average, the variability factor of 3.0 for 30-day averages (rounded off from 3.04 in Table 14-30), and the BPT model plant flow rate of 120 m3/kkg. The proposed TSS maximum 30-day average concentration basis is given by:

$$(3.0)(21 \text{ mg/l}) = 63 \text{ mg/l}$$

and the proposed TSS maximum 30-day average by:

$$(63 \text{ mg/l})\ (120 \text{ m3/kkg})\left(\frac{\text{kg/m3}}{1000 \text{ mg/l}}\right) = 7.6 \text{ kg/kkg}$$

With a variability factor ratio (VFR) of 3.6, the corresponding proposed TSS daily maximum limitation is given by:

$$(3.6)(7.6 \text{ kg/kkg}) = 27 \text{ kg/kkg}$$

and the TSS daily maximum concentration basis is:

$$(63 \text{ mg/l})\ (3.6) = 230 \text{ mg/l}$$

Similarly for iron, the concentration basis for the proposed maximum 30-day average limitation is derived from the long term average and a variability factor of 4.0. The proposed iron maximum 30-day average (Table 14-31) concentration are given as:

$$(4.0)(0.62 \text{ mg/l}) = 2.5 \text{ mg/l}$$

and the proposed iron limitation is:

$$(2.5 \text{ mg/l})(120 \text{ m3/kkg})\left(\frac{\text{kg/m3}}{1000 \text{ mg/l}}\right) = 0.30 \text{ kg/kkg}$$

The corresponding proposed daily maximum limitation for iron is determined by applying the variability factor ratio (VFR) of 3.4 as follows:

$$(3.4)\ (0.30 \text{ kg/kkg}) = 1.0 \text{ kg/kkg}$$

and the iron daily maximum concentration basis is:

$$(3.4)\ (2.5 \text{ mg/l}) = 8.5 \text{ mg/l}$$

The proposed BPT limitations are presented in Table 14-45.

<u>Toxic Pollutants</u> - For the Ti02 Chloride-Ilmenite process, the proposed limitations on the toxic metals found at significant concentrations are based on estimates of achievable 30-day average concentrations as presented in Table 8-11 because no directly applicable industry treatment performance data are available. The lower limits of treatability shown for lime/settlng are taken as the concentration bases for the proposed maximum 30-day average limitations on the various toxic metals. The variability factor ratio (VFR) used for each pollutant is identical to the value derived from long-term monitoring data on Plant #559 presented in Table 14-31.

A. Antimony: The concentration basis for the proposed maximum 30-day average limitation is the lower limit of

TABLE 14-45. PROPOSED LIMITATIONS
Titanium Dioxide - Chloride Process Using Ilmenite
Best Practicable Control Technology Currently Available
Waste Water Flow: 120 m^3/kkg

Pollutant	Estimated Treatability (mg/l)	VFR(1)	Concentration Basis (mg/l)		Effluent Limit (kg/kkg)	
			Max 30-day Avg	24-hr max.	Max 30-day Avg	24-hr max.
Conventional and Nonconventional Pollutants						
Total Suspended Solids	21(2)	3.6	63	230	7.6	27
Iron	0.62(2)	3.4	2.5	8.5	0.30	1.0
Toxic Pollutants						
Antimony (6)	0.80(3)	1.9(4)	0.80	1.5	0.096	0.18
Arsenic (6)	0.50(3)	1.9(5)	0.50	0.95	0.060	0.11
Cadmium (6)	0.10(3)	1.6(4)	0.10	0.16	0.012	0.019
Chromium (6)	0.10(3)	1.9(4)	0.10	0.19	0.012	0.023
Copper (6)	0.50(3)	1.9(4)	0.50	0.95	0.060	0.11
Lead (6)	0.30(3)	1.5(4)	0.30	0.45	0.036	0.054
Nickel(6)	0.20(3)	1.9(4)	0.20	0.38	0.024	0.046
Zinc (6)	0.50(3)	2.1(4)	0.50	1.1	0.060	0.013

(1) - VFR: ratio of the 24-hr(daily) variability factor to the 30-day average variability factor

(2) - Long term average from Plant #559 monitoring data(Table 14-31)

(3) - Estimated lower limit of treatability as a 30-day average(Table 8-11)

(4) - Based on long term data from Plant #559(Table 14-30)

(5) - Set equal to the VFR for antimony

(6) - Applicable to proposed BAT and PSES limitations.

treatability, 0.8 mg/l, from Table 8-11. Applying the BPT model plant flow rate of 120 m3/kkg.

The proposed antimony limitation is given by:

$$(0.80\ mg/l)\ (120\ m3/kkg)\left(\frac{kg/m3}{1000\ mg/l}\right)$$
$$= 0.096\ kg/kkg$$

and, by applying the VFR value of 1.9, the proposed antimony daily maximum limitation is,

$$(1.9)\ (0.096\ kg/kkg) = 0.18\ kg/kkg.$$

for which the corresponding concentration is:

$$(1.9)\ (0.80\ mg/l) = 1.5\ mg/l$$

B. Arsenic: For arsenic, the lower limit of treatability is 0.50 mg/l. Although long-term monitoring data on arsenic are not available, arsenic is expected to behave in a manner similar to antimony during lime treatment and for this reason, the same VFR value of 1.9 is utilized.

Thus, the proposed arsenic maximum 30-day average limitation is given by:

$$(0.50\ mg/l)\ (120\ m3/kkg)\left(\frac{kg/m3}{1000\ mg/l}\right)$$
$$= 0.060\ kg/kkg$$

and the proposed antimony daily limitation by:

$$(1.9)\ (0.060\ kg/kkg) = 0.11\ kg/kkg$$

C. Cadmium: The lower limit of treatability for cadmium is estimated at 0.10 mg/l as a 30-day average (Table 8-11). Using this value as the concentration basis, the proposed cadmium maximum 30-day limitation is given by:

$$(0.10\ mg/l)\ (120\ m3/kkg)\left(\frac{kg/m3}{1000\ mg/l}\right)$$
$$= 0.012\ kg/kkg$$

and the proposed cadmium daily maximum limitation is obtained by applying the VFR value of 1.6 from Table 14-31. That is:

$$(1.6)\ (0.012\ kg/kkg) = 0.019\ kg/kkg$$

D. Chromium: The proposed chromium limitations are based on an estimated 30-day average treatability limit of 0.10 mg/l using lime/settling treatment. The achievability of this concentration level is predicated on the assumption that chromium is in the trivalent state and no significant amount of the hexavalent form is present.

Thus, the proposed chromium maximum 30-day average limitation is given by:

$$(0.10\ mg/l)\ (120\ m3/kkg)\left(\frac{kg/m3}{1000\ mg/l}\right)$$
$$= 0.012\ kg/kkg$$

and application of the VFR value of 1.9 gives the proposed chromium daily maximum limitation as,

$$(1.9)\ (0.012\ kg/kkg) = 0.023\ kg/kkg.$$

E. Copper: Using an estimated lower limit of treatability for copper of 0.50 mg/l and a VFR value of 1.9, the proposed limitations are identical to those given above for arsenic. The proposed maximum 30-day limitation is 0.060 kg/kkg and the proposed daily maximum limitation is 0.11 kg/kkg.

F. Lead: The lower limit of treatability for lead is estimated at 0.30 mg/l as a 30-day average (Table 8-11). Using this value as the concentration basis, the proposed lead maximum 30-day average limitation is given by:

$$(0.30\ mg/l)\ (120\ m3/kkg)\left(\frac{kg/m3}{1000\ mg/l}\right)$$
$$= 0.036\ kg/kkg$$

and, applying the VFR of 1.5 from Table 14-31, the proposed lead daily maximum limitation is:

$$(1.5)\ (0.036\ kg/kkg) = 0.054\ kg/kkg$$

G. Nickel: In a similar manner for nickel, the proposed limitations are based on an estimated treatabiliy limit of 0.20 mg/l and a VFR value of 1.9. The proposed nickel maximum 30-day average is given by:

$$(0.20\ mg/l)\ (120\ m3/kkg)\left(\frac{kg/m3}{1000\ mg/l}\right)$$
$$= 0.024\ kg/kkg$$

and the proposed nickel daily maximum is given by:

(1.9) (0.024 kg/kkg) = 0.046 kg/kkg

H. Zinc: The estimated treatability limit for zinc is the same as arsenic and copper, i.e., 0.50 mg/l, however, a VFR value of 2.1 is applied instead of 1.9.

Thus, the proposed zinc maximum 30-day average limitation is given by:

$$(0.50 \text{ mg/l})\ (120 \text{ m3/kkg})\left(\frac{\text{kg/m3}}{1000 \text{ mg/l}}\right)$$
$$= 0.060 \text{ kg/kkg}$$

and the proposed zinc daily maximum is given by:

(2.1) (0.060 kg/kkg) = 0.13 kg/kkg

The proposed BPT limitations are presented in Table 14-45.

14.21.3 Basis for Proposed BCT Effluent Limitations

For BCT, the Agency is proposing limitations for TSS equal to the BPT limitations because BAT is equal to BPT.

14.21.4 Basis for Proposed BAT Effluent Limitations

For BAT, the Agency is proposing limitations on iron and the toxic pollutants based on the application of Level 1 technology which is equivalent to BPT. The model plant flow basis of 120 m3/kkg used for BPT is also used for BAT. The proposed BAT limitations are presented in Table 14-45. A more advanced technology using soda ash precipitation and recycle of waste water was considered for the similar sulfate process but was rejected because its performance has not been demonstrated.

14.21.5 Basis for the Proposed New Source Performance Standards

Technology Basis

For NSPS the Agency is proposing limitations based on the application of Level 2 treatment technology which adds dual media filtration to the BPT system for greater efficiency in the removal of suspended solids including iron and toxic metal precipitates.

Flow Basis

The reported data on process contact and clean-up waste water flow at Plant #713 is selected as the basis of a model plant for new sources. Process modifications resulting in a

greatly increased efficiency of water use reduce the average flow rate to 31 m3/kkg as shown in Table 14-36.

Basis for Pollutant Limitations

Conventional parameters -

A. pH: The treated effluent is to be controlled within the range of pH 6.0 to 9.0. This limitation is based on data presented in Appendix B of this report and the JRB Study (52).

B. TSS: The concentration basis for the proposed NSPS maximum 30-day average limitation is obtained by applying an average filtration efficiency of 38 percent removal (41) to the corresponding BPT concentration of 64 mg/l (Table 14-45). That is:

$$(1.00-0.38)\ (64\ mg/l) = 40\ mg/l:$$

Then, the proposed maximum 30-day average limitation is obtained by applying the NSPS model plant flow rate of 31 m3/kkg:

$$(40\ mg/l)\ (31\ m3/kkg)\left(\frac{kg/m3}{1000\ mg/l}\right) = 1.2\ kg/kkg$$

The proposed TSS daily maximum limitation is determined by multiplying this value by the VFR of 3.6 (Table 14-31), namely:

$$(3.6)\ (1.2\ kg/kkg) = 4.3\ kg/kkg$$

and the daily maximum concentration basis is:

$$(3.6)\ (40\ mg/l) = 140\ mg/l$$

The same VFR that was used in developing the proposed BPT limitations is also used for NSPS because the actual variability of the BPT system with added filtration is expected to be somewhat less than the statistically derived VFR for BPT.

The proposed NSPS limitations are presented in Table 14-46.

Nonconventional pollutants - The only nonconventional pollutant of concern is iron. For NSPS, the Agency is proposing a maximum 30-day average limitation based on an average filtration efficiency of 38 percent removal (41).

TABLE 14-46. PROPOSED LIMITATIONS
Titanium Dioxide - Chloride Process Using Ilmenite
New Source Performance Standards*
Waste Water Flow: 32 m^3/kkg

Pollutant	Estimated Treatability (2) (mg/l)	VFR(1)	Concentration Basis (mg/l) Max 30-day Avg	Concentration Basis (mg/l) 24-hr max.	Effluent Limit (kg/kkg) Max 30-day Avg	Effluent Limit (kg/kkg) 24-hr max.
Conventional and Nonconventional						
Total suspended Solids	40	3.6	40	140	1.2	4.3
Iron	1.6	3.4	1.6	5.4	0.050	0.17
Toxic Pollutants						
Antimony(3)	0.80	1.9	0.80	1.5	0.025	0.048
Arsenic (3)	0.50	1.9	0.50	0.95	0.016	0.030
Cadmium(3)	0.075	1.6	0.075	0.12	0.0023	0.0037
Chromium(3)	0.040	1.9	0.040	0.076	0.0012	0.0023
Copper(3)	0.29	1.9	0.29	0.55	0.0090	0.017
Lead(3)	0.060	1.5	0.060	0.090	0.0019	0.0029
Nickel(3)	0.17	1.9	0.17	0.32	0.0053	0.010
Zinc(3)	0.47	2.1	0.47	0.99	0.015	0.032

(1) - VFR: ratio of the 24-hour daily variability factor to the 30-day average variability factor.

(2) - Based on the application of pollutant - specific removal efficiencies for dual-media filtration (41) to adjust the BPT performance on treatability estimates shown in 30-day average concentrations in Table 14-45.

* Including pretreatment standards for new sources (PSNS) covering iron and toxic metals which are expressed as concentrations.

(3) - Applicable to proposed PSNS limitations.

Thus, the appropriate concentration basis is derived from the corresponding concentration basis of 2.5 mg/l of iron used for the BPT maximum 30-day average (Table 14-45). That is:

$$(1.00-0.38)\ (2.5\ mg/l) = 1.6\ mg/l$$

and the limitation proposed for NSPS is:

$$(1.6\ mg/l)\ (31\ m3/kkg)\left(\frac{kg/m3}{1000\ mg/l}\right) = 0.050\ kg/kkg$$

Again, applying the same VFR value of 3.4 that was used for the BPT limitations, the proposed NSPS daily maximum limitation for iron is:

$$(3.4)\ (0.050\ kg/kkg) = 0.17\ kg/kkg$$

and the daily maximum concentration basis is:

$$(3.4)\ (1.6\ mg/l) = 5.4\ mg/l$$

Toxic pollutants - The Agency is proposing new source performance standards for the eight toxic metals identified at significant concentrations during the screening and verification sampling program. To the extent possible, a specific filtration removal efficiency derived from published literature data (41) is applied for each toxic pollutant parameter. The filtration removal efficiency (percent removal) is applied to the estimated lower limit of treatability (Table 8-11) for lime/settling treatment (BPT basis) to arrive at the concentration basis for each proposed NSPS maximum 30-day average limitations.

A. Antimony and arsenic: No credit for additional removal by filtration is taken for either antimony or arsenic because removal data is not available. The Agency is proposing NSPS limitations for which the concentration bases are identical to those used for the development of BPT limitations. Thus, for antimony, the proposed NSPS maximum 30-day average is given by:

$$(0.80\ mg/l)\ (31\ m3/kkg)\left(\frac{kg/m3}{1000\ mg/l}\right) = 0.025\ kg/kkg.$$

and the corresponding daily maximum limitation is obtained by applying the VFR of 1.9, that is:

$$(1.9)\ (0.025\ kg/kkg) = 0.048\ kg/kkg.$$

Similarly, for arsenic the proposed NSPS maximum 30-day average limitation is:

$$(0.50 \text{ mg/l})\ (31 \text{ m3/kkg}) \left(\frac{\text{kg/m3}}{1000 \text{ mg/l}}\right) = 0.016 \text{ kg/kkg}$$

and the proposed daily maximum is:

$$(1.9)\ (0.016 \text{ kg/kkg}) = 0.030 \text{ kg/kkg}$$

B. Cadmium: Employing a filtration removal efficiency of 25 percent for cadmium (41) results in the following concentration basis for the proposed NSPS maximum 30-day average limitation:

$$(1.00-0.25)\ (0.10 \text{ mg/l}) = 0.075 \text{ mg/l}$$

Therefore, the proposed limitation is:

$$(0.075 \text{ mg/l})\ (31 \text{ m3/kkg}) \left(\frac{\text{kg/m3}}{1000 \text{ mg/l}}\right) = 0.0023 \text{ kg/kkg}$$

The corresponding proposed daily maximum limitation:

$$(1.6)\ (0.0023 \text{ kg/kkg}) = 0.0037 \text{ kg/kkg.}$$

and the daily maximum concentration basis is:

$$(1.6)\ (.075 \text{ mg/l}) = 0.12 \text{ mg/l}$$

C. Chromium: For chromium the filtration removal efficiency is reported to be approximately 60 percent (41).

Thus, for the proposed NSPS maximum 30-day average limitations, the concentration basis is given by:

$$(1.00-0.60)\ (0.10 \text{ mg/l}) = 0.040 \text{ mg/l}$$

and the proposed NSPS limitation is:

$$(0.040 \text{ mg/l})\ (31 \text{ m3/kkg}) \left(\frac{\text{kg/m3}}{1000 \text{ mg/l}}\right) = 0.0012 \text{ kg/kkg.}$$

The proposed NSPS daily maximum limitation for chromium is then obtained by applying the VFR value of 1.9, that is:

$$(1.9)\ (0.0012 \text{ kg/kkg}) = 0.0023 \text{ kg/kkg.}$$

and the daily maximum concentration basis is:

$$(1.9)\ (0.040\ mg/l) = 0.076\ mg/l$$

D. Copper: The estimated filtration efficiency for copper removal is approximately 42 percent (41). Therefore, the concentration basis for the proposed NSPS maximum 30-day average effluent limitation is given by:

$$(1.00-0.42)\ (0.50\ mg/l) = 0.29\ mg/l,$$

and the proposed limitation is:

$$(0.29\ mg/l)\ (31\ m3/kkg)\left(\frac{kg/m3}{1000\ mg/l}\right) = 0.0090\ kg/kkg$$

The proposed NSPS daily maximum is then obtained by multiplying the maximum 30-day average by the VFR value of 1.9. That is:

$$(1.9)\ (0.0090\ kg/kkg) = 0.017\ kg/kkg$$

and the daily maximum concentration basis is:

$$(1.9)\ (.24\ mg/l) = 0.55\ mg/l$$

E. Lead: Starting with the estimated BPT treatability level of 0.30 mg/l for lead and applying a filtration removal efficiency of 80 percent (41), one obtains:

$$(1.00-0.80)\ (0.30\ mg/l) = 0.060\ mg/l$$

This is the concentration basis for the proposed NSPS maximum 30-day effluent limitation which is:

$$(0.060\ mg/l)\ (31\ m3/kkg)\left(\frac{kg/m3}{1000\ mg/l}\right)$$
$$= 0.0019\ kg/kkg$$

The proposed NSPS daily maximum limitation for lead is then calculated by multiplying the 30-day average limitation by the VFR value of 1.5 as follows:

$$(1.5)\ (0.0019\ kg/kkg) = 0.0029\ kg/kkg$$

and the daily maximum concentration basis is:

$$(1.5)\ (0.060\ mg/l) = 0.090\ mg/l$$

One can determine the concentration basis for the proposed daily maximum limitation by applying the VFR to the concentration basis for the maximum 30-day average:

$$(1.5)\ (0.060\ mg/l) = 0.090\ mg/l$$

F. Nickel: For nickel the estimated efficiency of removal by dual media filtration is approximately 14 percent (41). Thus, the maximum 30-day average concentration is:

$$(1.00-0.14)\ (0.20\ mg/l) = 0.17\ mg/l$$

and the proposed NSPS maximum 30-day average effluent limitation for nickel is:

$$(0.17\ mg/l)\ (31\ m3/kkg)\left(\frac{kg/m3}{1000\ mg/l}\right) = 0.0053\ kg/kkg$$

The corresponding proposed daily maximum effluent limitation is obtained by applying the VFR value of 1.9. That is:

$$(1.9)\ (0.0053\ kg/kkg) = 0.010\ kg/kkg$$

and the daily maximum concentration basis is:

$$(1.9)\ (0.17\ mg/l) = 0.32\ mg/l$$

G. Zinc: For zinc, the removal efficiency using dual media filtration is estimated at approximately 6 percent (41). This value is applied to the BPT concentration basis to obtain the NSPS concentration basis as follows:

$$(1.00-0.06)\ (0.50\ mg/l) = 0.47\ mg/l$$

Thus, the proposed NSPS maximum 30-day average effluent limitations for zinc is:

$$(0.47\ mg/l)\ (31\ m3/kkg)\left(\frac{kg/m3}{1000\ mg/l}\right) = 0.015\ kg/kkg$$

and the corresponding proposed daily maximum limitation is obtained by multiplying this limitation by the VFR value of 2.1. That is:

$$(2.1)\ (0.015\ kg/kkg) = 0.032\ kg/kkg$$

and the daily maximum concentration basis is:

(2.1) (0.47 mg/l) = 0.99 mg/l

The proposed NSPS limitations are presented in Table 14-46.

14.21.6 Basis for Proposed Pretreatment Standards

Existing Sources

The Agency is proposing Pretreatment Standards for Existing Sources (PSES) based on Level 1 (BPT/BAT) treatment. The pollutants to be limited are iron and the toxic metals as indicated in Table 14-45.

New Sources

Pretreatment Standards for New Sources (PSNS) are being proposed by the Agency on the basis of NSPS treatment technology for the Ti02-Chloride-Ilmenite industry. The pollutants to be limited are iron and the toxic metals as indicated in Table 14-46.

SECTION 15

ALUMINUM FLUORIDE INDUSTRY

15.1 INDUSTRY PROFILE

15.1.1 General Description

Aluminum fluoride is used as a raw material in the production of cryolite (sodium fluoroaluminate), which in turn is used in the production of aluminum. Aluminum fluoride is used also as a metallurgical flux (for welding rod coatings), as a ceramic flux (for glazes and enamels), and as a brazing flux (for aluminum fabrication).

The industry profile data for this subcategory are given in Table 15-1, while the status of regulations is given in Table 15-2.

15.1.2 General Process Description and Raw Materials

In the dry process for the manufacture of aluminum fluoride, partially dehydrated alumina hydrate is reacted with hydrofluoric acid gas. The reactions is given as:

$$Al2O3 + 6HF = 2AlF3 + 3H2O \quad (1)$$

The product, aluminum fluoride, is formed as a solid, and is cooled with noncontact cooling water before being milled and shipped. The gases from the reactor are scrubbed with water to remove unreacted hydrofluoric acid before being vented to the atmosphere. A simplified flow diagram of the process is shown in Figure 15-1.

15.2 WATER USE AND WASTE SOURCE CHARACTERISTICS

15.2.1 Water Use

Water is used in noncontact cooling of the product, for seals on vacuum pumps and for scrubbing the reacted gases before

TABLE 15-1. SUBCATEGORY PROFILE DATA SUMMARY

SUBCATEGORY ALUMINUM FLUORIDE

Total subcategory capacity rate	NA
Total subcategory production rate	134,700 kkg/year
Number of plants in this subcategory	5*
308 Data on file for	6
With total capacity of	204,800 kkg/year
With total production of	120,000 kkg/year
Representing capacity	NA
Representing production	NA
Plant production range:	
Minimum	38 kkg/year
Maximum	45,600 kkg/year
Average production	24,300 kkg/year
Median production	35,500 kkg/year
Average capacity utilization	59 percent
Plant age range:	
Minimum	5 years
Maximum	21 years
Waste water flow range:	
Minimum	539 cubic meters/day
Maximum	2,200 cubic meters/day
Volume per unit product:	
Minimum	5 cubic meters/kkg
Maximum	12 cubic meters/kkg

Sources of data are Stanford Research Institute, Directory of Chemical Producers, U.S.A., 1977, U.S. Department of Commerce, Current Industrial Reports, December 1977; Energy and Environmental Analysis, Inc.; Draft Report, "Preliminary Economic Assessment of Effluent Limitations in the Inorganic Chemical Industry," June, 1978 and "Economic Analysis of Proposed Revised Effluent Guidelines and Standards for the Inorganic Chemicals Industry," March, 1980.

NA = Not Available

* Seven plants were operating at the beginning of this study, but two closed do production after 1978.

TABLE 15-2 . STATUS OF REGULATIONS - EFFLUENT LIMITATION GUIDELINES

SUBCATEGORY Aluminum Fluoride

SUBPART W (40 CFR 415.230, 5/22/75)

		STANDARDS					
		BPCTCA*		BATEA*		NSPS*	
Product Process	Parameters	Max.[1] kg/kkg (mg/l)	Avg.[2] kg/kkg (mg/l)	Max. kg/kkg (mg/l)	Avg. kg/kkg (mg/l)	Max. kg/kkg (mg/l)	Avg. kg/kkg (mg/l)
AlF_3	Fluoride	0.68 (40)[3]	0.34 (20)				
	TSS	0.86 (51)	0.43 (25)				
	Aluminum	0.34 (20)	0.17 (10)				

*Sections 415.230, 415.231, and 415.232 were revoked by the Agency (41 FR 51601, November 23, 1976).

[1]Max. = Maximum of any one day.

[2]Avg. = Maximum average of daily values for thirty consecutive days.

[3]flow basis 17,000 l/kkg.

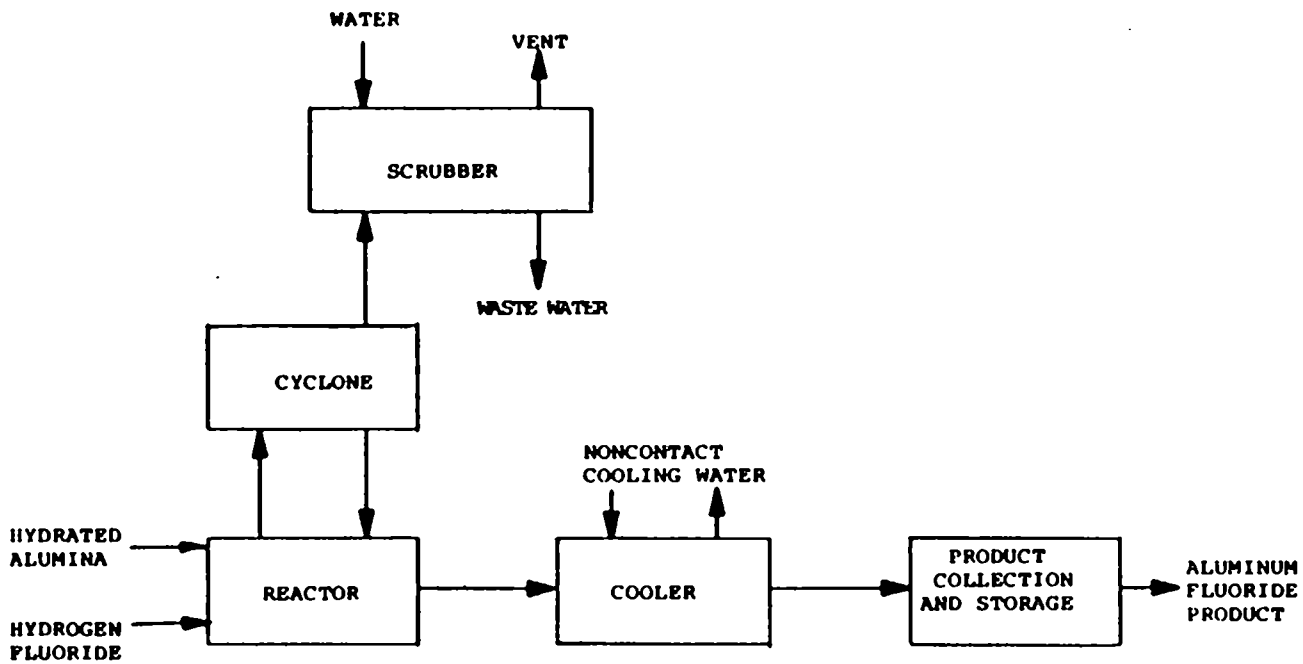

Figure 15-1. General process flow diagram for production of aluminum fluoride.

being vented to the atmosphere. Water is also used for leak and spill cleanup and equipment washdown. Table 15-3 summarizes water usage in the aluminum fluoride industry.

15.2.2 Waste Sources

Noncontact Cooling Water

Noncontact cooling water is used to cool the product coming out of the reactor. In some cases it is recirculated and the blowdown treated separately from other process contact waste water or it is discharged without treatment. The water can be monitored for fluoride and if process contamination occurs, it can be diverted to the waste water treatment facility for fluoride removal.

Floor and Equipment Washings

The quantity and quality of waste water generated from these operations varies and depend largely on the housekeeping practices at the individual plants.

Scrubber Waste Water

This is the major source of waste water requiring treatment before discharge or recycle to the scrubber. It is contaminated with hydrofluoric acid, aluminum fluoride and aluminum oxide, and, in some cases, sulfuric acid and silicontetrafluoride have been detected. These originate as impurities in the hydrofluoric acid used in the process. Table 15-4 presents the waste water flows at different facilities in the subcategory. Noncontact cooling water is excluded from consideration since it normally does not contain pollutants.

Solid Wastes

In aluminum fluoride production, hydrofluoric gas and solids, such as aluminum trihydrate and aluminum fluoride, escape with the vent gases. During scrubbing, the solids are suspended in the scrubber water, while hydrofluoric acid gas is dissolved. In the treatment facility, the waste water is neutralized with lime and calcium fluoride precipitates out and settles with other suspended solids. In the majority of cases, the solids are retained in the lagoon for periods up to ten years. Table 15-5 gives a summary of the amounts of solids generated at two aluminum fluoride plants.

Different wastes from the aluminum fluoride process are intermixed before treatment. As mentioned earlier, scrubber water constitutes the major source of waste water in the aluminum fluoride subcategory. If the production of aluminum

TABLE 15-3. WATER USAGE IN THE ALUMINUM FLUORIDE SUBCATEGORY

Source	Water use per unit of production (m^3/kkg of AlF_3)			
	Plant # 837	Plant # 705 (2)	Plant # 188	Plant # 251 (2)
Non-contact cooling	14.5	NA (1)	6.95	NA
Indirect process contact (pumps, seals, leaks, spills)	12.2	1.15	NA	NA
Maintenance, e.g. cleaning and work area washdown	1.13	2.39	NA	1.02
Scrubber	3.45	8.92	3.46	18.7

(1) NA = Not Available

(2) Currently not manufacturing aluminum fluoride.

TABLE 15-4. WASTE WATER FLOW AT PLANTS #837, #705 AND #251 FOR ALUMINUM FLUORIDE SUBCATEGORY

Source	Flow rate per unit of production[1] (m^3/kkg of AlF_3)		
	Plant #837	Plant #705[4]	Plant #251[4]
Scrubber water	3.45	8.92[2]	18.7[3]
Maintenance equipment cleaning and work area washdown	1.13	2.39	1.02
Total raw waste flow	4.58	11.3	19.7
Average of above three flows		11.9	

(1) All flow information is from 308 Questionnaires and plant visits. Unit flow is calculated by dividing waste water flow in m^3/day by production in kkg/day.

(2) From Table 15-6 (see footnotes which describe basis of information).

(3) From Table 15-7 (see footnotes which describe basis of information).

(4) Currently not manufacturing aluminum fluoride.

TABLE 15-5. SOLIDS GENERATED AT PLANT #705 AND #251 PRODUCING ALUMINUM FLUORIDE

Plant	Total Solids Generated (kg/kkg of AlF_3)
#705[1]	54
#251[1]	69

(1) Currently not manufacturing aluminum fluoride.

fluoride is integrated with hydrofluoric acid, then the waste waters from both plants are combined and treated.

15.3 DESCRIPTION OF PLANTS VISITED AND SAMPLED

15.3.1 Screening

Plant #705 was visited in the screening phase of the program. Both hydrofluoric acid and aluminum fluoride are produced at this facility by the general processes described earlier. The waste water from the hydrofluoric acid and aluminum fluoride plants is mixed and sent to the treatment facility. At the treatment facility the combined waste water is neutralized with lime and sent to a series of settling ponds. The effluent from the last pond is given a final pH adjustment before a portion is discharged and the rest recycled to the process. Figure 15-2 shows a simplified block diagram of the process including the waste water treatment facility and sampling locations. Table 15-6 presents a summary of flow data of the sampled streams, and the data for important classical pollutant parameters.

15.3.2 Verification

Plant #705 was visited again and the same streams sampled in the screening phase also were sampled and analyzed in the verification phase. The variations in individual stream flows were small during the two phases of sampling. Table 15-6 summarizes the flow data and important conventional and nonconventional pollutant emissions. A second plant (Plant #251) was visited and sampled in the verification phase. Figure 15-3 is a simplified flow diagram of the aluminum fluoride manufacturing plant and the waste water treatment facility showing the sampling locations. Table 15-7 presents the flow and pollution concentration data for the plant. The aluminum fluoride and hydrofluoric acid waste streams are combined and sent to a gypsum pond for suspended solids removal. The overflow from the pond is mixed with alkaline and acid streams from other plants for neutralization and pH adjustment before final discharge.

15.3.3 Summary of the Toxic Pollutant Data

Following is a list of toxic pollutants which identifies their maximum concentration levels as found in the raw process waste streams sampled during screening and verification.

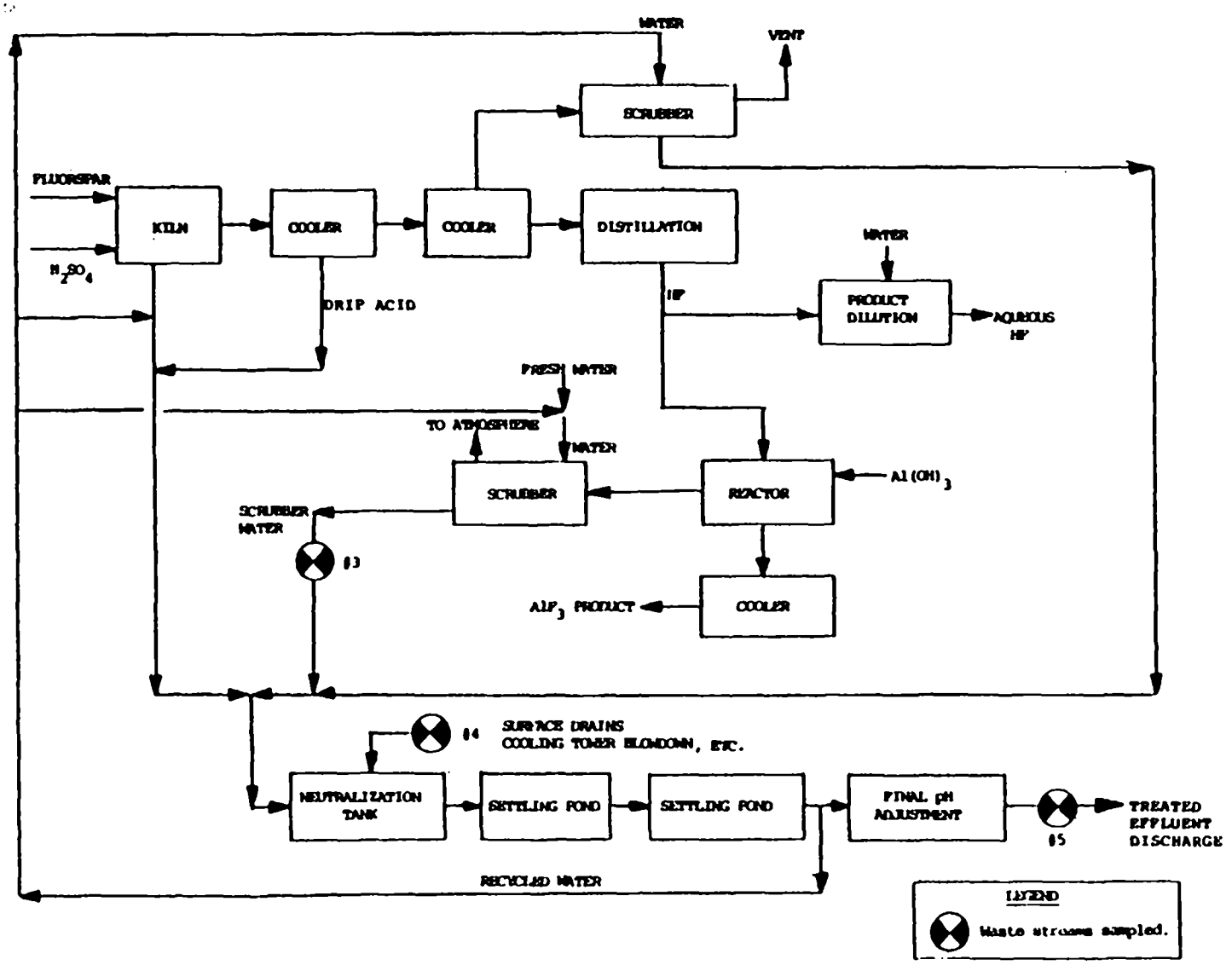

Figure 15-2. General process flow diagram at Plant #705 showing the sampling points (aluminum fluoride manufacture).

TABLE 15-6. FLOW AND POLLUTANT CONCENTRATION DATA OF THE SAMPLED WASTE STREAMS FOR PLANT #705 PRODUCING ALUMINUM FLUORIDE

Sampling Phase	Sampled Stream No.	Sampled Stream Description	Unit Flow (m^3/kkg)	Total Suspended Solids (mg/l) (3)	Total Suspended Solids (kg/kkg) (4)	Fluoride (mg/l) (3)	Fluoride (kg/kkg) (4)	Aluminum (mg/l) (3)	Aluminum (kg/kkg) (4)
Screening	3	AlF_3 scrubber	8.92	13,000	120	530	4.7	780	7.0
	4 (1)	Surface drains, cooling tower, blowdown, etc.	2.39	200	0.48	350	0.82	40	0.10
	3&4	Total raw waste load	11.3	11,000 (5)	120	490	5.5	620	7.1
	5	Treated waste (2)	24	80	2.0	70	1.6	10	0.17
Verification Sampling	3	AlF_3 scrubber	8.92	1,400	13	1400	12	460	4.1
	4 (1)	Surface drains, cooling tower, blowdown, etc.	2.39	200	0.48	170	0.40	27	0.060
	3&4	Total load	11.3	1,200 (5)	13	1100	13	370	4.1
	5	Treated waste (2)	24	2.0	0.048	20	0.55	1.0	0.012

(1) Consists of waste water from HF and AlF_3 process. Flow indicated is estimated portion of total flow contributed by AlF_3 maintenance and washdown waste water from 308 Questionnaire. Total flow is 17.8 m^3/kkg of product for both process wastes combined.

(2) Consists of waste water from HF and AlF_3 process. Plant currently not manufacturing AlF_3.

(3) Average of three daily composite samples during verification and single value obtained during screening.

(4) kg/kkg of AlF_3.

(5) Weighted average based on unit flows.

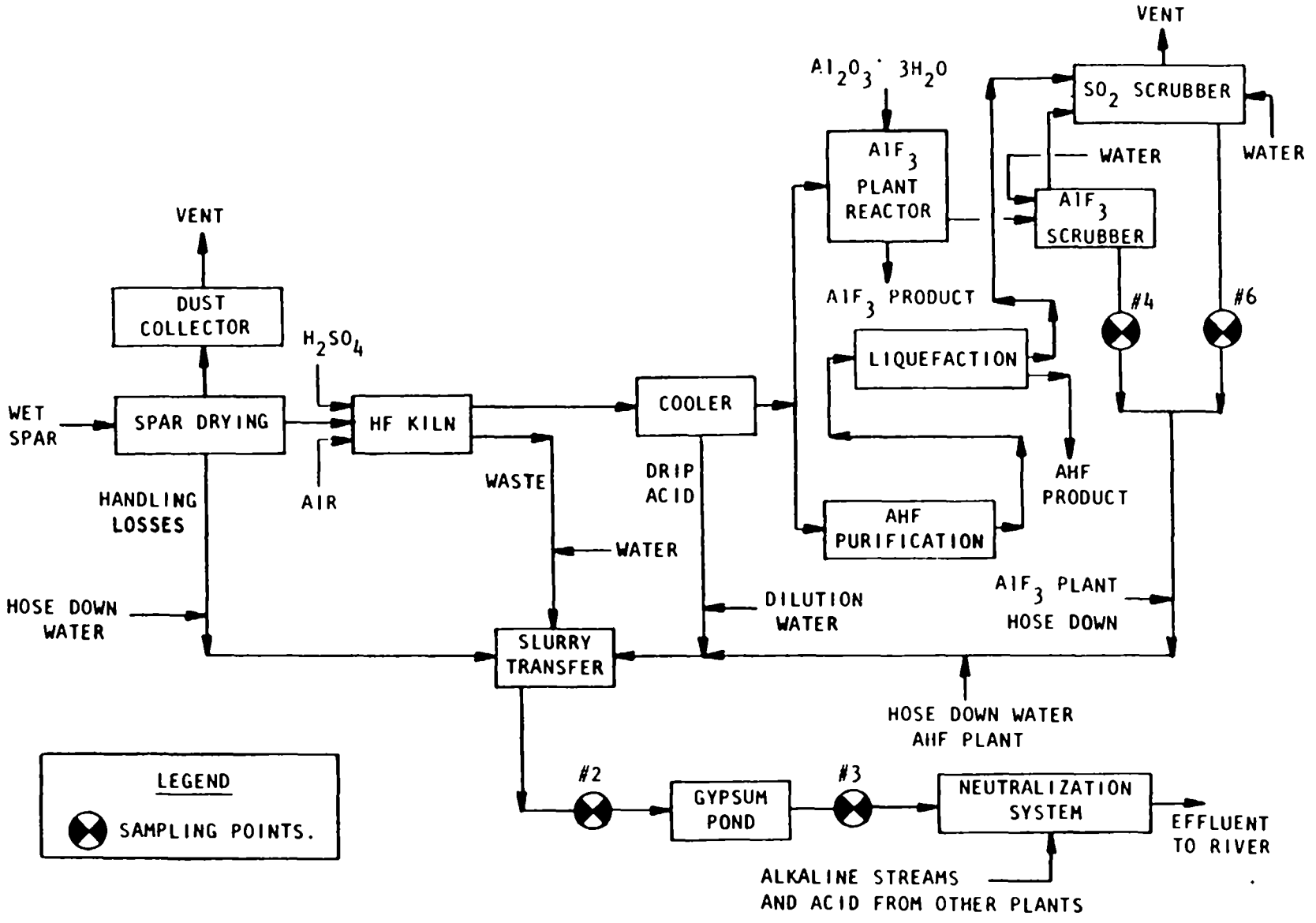

Figure 15-3. General process flow diagram at Plant #251 showing the sampling points. (aluminum fluoride manufacture).

TABLE 15-7. FLOW AND POLLUTANT CONCENTRATION DATA OF THE SAMPLED STREAMS FOR PLANT #251 PRODUCING ALUMINUM FLUORIDE

Stream No.	Sampled Stream Description	Unit Flow (m^3/kkg of AlF_3)	Total Suspended Solids		Fluoride		Aluminum	
			(mg/l)	(kg/kkg)	(mg/l)	(kg/kkg)	(mg/l)	(kg/kkg)
Verification Sampling								
4	AlF_3 scrubber water	12.6	1200	16	470	5.90	50	0.60
6	SO_2 scrubber water(1)	6.10	0.0	0.0	20	0.14	0.20	0.0010
4&6	Total raw waste load	18.7	1200	16	320	6.0	50	0.60
2	Gypsum pond influent(2)	25.1	19,000	470	660	17	26	0.65
3	Gypsum pond effluent(2)	25.1	9.0	0.23	320	8.0	22	0.55

(1) One half flow of SO_2 scrubber water is assumed to contribute to the AlF_3 process since the total flow is common to the AlF_3 and HF process.

(2) Consists of hydrofluoric acid and aluminum fluoride waste water. Plant currently not manufacturing AlF_3.

Maximum Raw Waste Concentrations Observed
(µg/l)

Pollutant	Screening Plant #705	Verification Plant #705 and #251
Arsenic	200	480
Selenium	68	97
Chromium	70	1100
Copper	120	250
Lead	25	91
Mercury	1.6	11
Nickel	150	290
Zinc	450	450
Cadmium	0.70	33
Antimony	0	3.0
Beryllium	0.80	0.80

Section 5.1.2 of this report describes the methodology of the screening and verification sampling program. In the aluminum fluoride industry, seven days of sampling were conducted at Plants #705 and #251. Seven sampling points were identified and studied for the subcategory. The evaluation of toxic pollutant content of these process-related waste streams was based on 637 analytical data points. The screening for toxic organic pollutants at Plant #705 generated an additional 645 analytical data points. The daily raw waste loads were calculated from the waste stream flow rates measured or estimated at the time of sampling and the measured pollutant concentration.

That is,

$$\text{Daily loading (as kg of pollutant per day)} = \frac{(C)\ (Q)}{1000}$$

Where:

C is the concentration of the pollutant expressed as mg/l (Note: kg/m3 = 1000 mg/l), and

Q is the Aluminum Fluoride process - waste stream flow rate expressed as m3/day. (m3, a cubic meter, is equal to 264.2 U.S. gallons)

Similarly, the unit loadings were calculated from the reported aluminum fluoride production rate, the waste stream flow rate, and the measured pollutant concentration.

$$\text{Unit loading (as kg of pollutant per kkg of aluminum fluoride)} = \frac{(C)\ (Q)}{1000P}$$

Where C and Q are the same as described above, and P is the aluminum fluoride production rate expressed as kkg/day. (kkg is 1000 kg, a metric ton, which is equal to 2205 lbs.)

The P and Q factors are for the Aluminum Fluoride Process and thereby the Agency has segregated that portion of the effluent attributable only to the Aluminum Fluoride Process.

Table 15-8 and 15-9 are a tabulation of the raw waste and treated toxic pollutant concentrations and loads determined during the three plant visits. The loads and concentrations are based on the average of three composite samples during verification and one composite sample during screening. These unit loads were used to determine the minimum, average, and maximum unit loading valves presented in Table 15-10.

Based on the total annual production of 134,700 kkg/year in this subcategory and the average waste load generated per unit product in Table 15-10, the estimated total toxic pollutant raw waste loads generated each year for this subcategory are as follows:

Pollutant	Waste Load (kg/year)
Arsenic	180
Selenium	140
Chromium	400
Copper	94
Lead	20
Mercury	3.0
Nickel	180
Zinc	140
Cadmium	11
Antimony	0.70
Beryllium	0.30

TABLE 15-8. TOXIC POLLUTANT AVERAGE RAW WASTE LOADS AND CONCENTRATIONS

SUBCATEGORY ALUMINUM FLUORIDE

Pollutant	Screening		Verification				Average Concentration (mg/l)
	Plant #705		Plant #705		Plant #251		
	(mg/l) (1)	(kg/kkg) (2)	(mg/l)	(kg/kkg)	(mg/l)	(kg/kkg)	
Arsenic	0.18	0.0020	0.18	0.0020	0.020	0.00030	0.13
Selenium	0.050	0.0010	-- (3)	-- (3)	0.050	0.0010	0.050
Chromium	0.030	0.00030	0.44	0.0050	-- (3)	-- (3)	0.24
Copper	0.10	0.0010	0.070	0.0010	0.010	0.00010	0.060
Lead	0.0050	0.00010	0.020	0.00020	0.010	0.00010	0.012
Mercury	0.00040	0.0000040	0.00040	0.0000050	0.0030	0.000050	0.0013
Nickel	0.11	0.0010	0.22	0.0030	0.010	0.00020	0.11
Zinc	0.16	0.0020	0.080	0.0010	0.020	0.00030	0.090
Cadmium	0.00020	0.0000020	0.010	0.00020	-- (3)	-- (3)	0.0050
Antimony	-- (3)	-- (3)	0.00040	0.0000050	-- (3)	-- (3)	0.00040
Beryllium	0.00020	0.0000020	-- (3)	-- (3)	-- (3)	-- (3)	0.00020

(1) Concentrations based on average raw waste loads shown and total process production and waste flows.

(2) kg/kkg of product.

(3) -- below analytical detection limit.

TABLE 15-9. TOXIC POLLUTANT EFFLUENT CONCENTRATIONS DURING SAMPLING

SUBCATEGORY ALUMINUM FLUORIDE

Pollutant	Plant and Sampling Phase			Average (mg/l)
	#705 Screening (mg/l)	#705 Verification (mg/l)	#251 Verification (mg/l)	
Arsenic	ND(1)	ND	0.0050	< 0.0050
Selenium	ND	ND	0.070	< 0.070
Chromium	0.0070	0.040	0.22	0.090
Copper	0.10	0.0010	0.070	0.060
Lead	0.0020	0.020	0.030	0.020
Mercury	ND	ND	ND	ND
Nickel	0.050	ND	0.45	< 0.25
Zinc	0.0020	0.0010	ND	0.0020
Cadmium	0.0020	0.0010	ND	< 0.0020
Antimony	ND	ND	ND	ND
Beryllium	0.0020	ND	ND	< 0.0020

(1) ND -- Not Detected.

TABLE 15-10. SUMMARY OF RAW WASTE LOADINGS FOUND IN SCREENING AND VERIFICATION SAMPLING

SUBCATEGORY ALUMINUM FLUORIDE

Pollutant	Loading Range, kg/day		Unit Loading, kg/kkg			No. of Plants Averaged
	Minimum	Maximum	Minimum	Average[1]	Maximum	
Toxic						
Arsenic	0.050	0.080	0.00030	0.0013	0.0020	3
Selenium	0.030	0.16	0.0010	0.0010	0.0010	2
Chromium	0.020	0.22	0.00030	0.0030	0.0050	2
Copper	0.020	0.050	0.00010	0.00070	0.0010	3
Lead	0.0030	0.020	0.00010	0.00015	0.00020	3
Mercury	0.026	0.0080	0.0000040	0.000020	0.000050	3
Nickel	0.026	0.12	0.00020	0.0013	0.0030	3
Zinc	0.040	0.080	0.00030	0.0010	0.0020	3
Cadmium	0.00010	0.0070	0.0000020	0.000080	0.00020	2
Antimony	NA[2]	0.00020	NA	0.0000050	NA	1
Beryllium	NA	0.00010	NA	0.0000020	NA	1
Conventional and Nonconventional						
TSS	600	5400	13	50	119.0	3
Fluorine	250	980	5.5	8.1	13.0	3
Aluminum	100	320	0.60	3.9	7.0	3

(1) Average unit loadings from Table 15-8.
(2) Not Applicable

15.4 POLLUTION ABATEMENT OPTIONS

15.4.1 Toxic Pollutants of Concern

The toxic pollutants found in actual plant waste waters are lead, mercury, cadmium, antimony, beryllium, copper, arsenic, chromium, nickel, zinc, and selenium. In the case of selenium, it is apparent that the source was the raw water supply and is therefore not regarded as a process-related pollutant, but control of selenium in the treated effluent may be required. The ones of most concern are chromium and nickel.

Copper and chromium may be present as trace impurities in the hydrofluoric acid used to react with bauxite to form aluminum fluoride. Arsenic, zinc, and nickel may originate as impurities in the bauxite ore. Waste treatment processes should be designed to control TSS, fluoride, and the significant toxic metals. Lead, mercury, cadmium, antimony, and beryllium are eliminated as toxic pollutants of concern because levels observed are too low to be considered treatable.

15.4.2 Process Modifications and Technology Transfer Options

1. Total recycle of waste water to the scrubbers is feasible if final neutralization is with soda ash. The calcium in the waste is precipitated as calcium carbonate and scaling problems in pipes and scrubbers are reduced.

2. Passage of the vent gases from the reactor through a cyclone prior to scrubbing with water will remove the aluminum oxide and aluminum fluoride particulates. The collected material in the cyclone can be recycled to the reactor. The installation of a cyclone will result in material recovery and will also reduce the suspended solids load going to the waste water treatment facility.

15.4.3 Best Management Practices

1. Rainfall runoff in plant areas, treatment facilities and other places susceptible to fluoride contamination can be collected and sent to the waste water treatment facility.

2. If solid wastes containing fluoride are stored on land, studies should be conducted to ascertain the risk of contaminating ground water. Where necessary, provisions can be made for collection and treatment of leachate, permeate, and runoff.

3. Settling ponds in the waste water treatment facility should be deep enough (or provided with baffles) to eliminate or reduce turbulence caused by wind and rainfall. This will reduce the incidence of weather-related plant upsets, and suspended solids limitations will be met more consistently.

15.4.4 Prevailing Control and Treatment Practices

Plant #705 practices lime neutralization and settling of the waste waters. Since aluminum fluoride production is integrated with hydrofluoric acid production, the waste waters from the two processes are combined before treatment. The plant does not treat noncontact cooling water.

At Plant #837 the tail gases are scrubbed with soda ash solution, and the resulting solution is sent to an adjacent facility for use. The water from the wet scrubbers on the hydrated alumina dryers are also sent to an adjacent facility for use. The waste waters from area washdown are combined with other product waste water, treated with hydrated lime and sent to a settling lagoon before discharge.

Plant #188 produces aluminum fluoride in small quantities and in batches. The waste water from the batch operation is first sent to a collection pond. It then goes to a second pond where lime and alum are added and it finally enters a third pond where the pH is adjusted by recarbonation.

Plant #251 mixes the aluminum fluoride waste with hydrofluoric acid plant waste. The combined waste water is sent to gypsum ponds for suspended solids removal. The supernatant is treated with an effluent from another plant for pH control and neutralization. Because of the presence of complex fluorides (from the HF process) in the waste waters, the plant is planning to use a new proprietary process in the near future to further reduce fluoride levels in the final effluent.

15.4.5 Advanced Treatment Technologies

Metal ions can be precipitated as hydroxides at alkaline pH levels, and in clarified solutions they may be exchanged for hydrogen or sodium ions by ion exchange. Metal ions at low levels may also be controlled by xanthate precipitation, although the process is not widely used. Sulfide precipitation will reduce copper, nickel, and zinc to low levels but will not control chromium or arsenic. Although the mechanism is not clear, arsenic levels appear to be reduced in the lime neutralization process followed at most plants, perhaps by entrapment or adsorption of the oxide during the precipitation of calcium fluoride. A combination of lime and ferric sulfate coagulation is probably the most effective and practical method for reducing arsenic concentrations.

15.5 SELECTION OF APPROPRIATE TECHNOLOGY AND EQUIPMENT

15.5.1 Technologies for Different Treatment Levels

Level 1 (BPT)

Neutralization with lime is widely used in the industry to remove the primary nonconventional pollutant as calcium fluoride. Because lime neutralization to pH 10 results in significant incidental removal of toxic pollutants, alkaline precipitation was chosen as BPT (Level 1) technology. The flow diagram is shown in Figure 15-4.

Level 2 (BAT and NSPS)

A higher removal of suspended metal hydroxides, TSS, and CaF_2 can be achieved by adding dual media filtration to the Level I system. The flow diagram is shown in Figure 15-5.

Level 3

Sulfide precipitation is added to the proposed BAT level of treatment to attain a higher level of heavy metal removal. Chromium and selenium levels are not appreciably reduced although other toxic pollutant levels are. The flow diagram is shown in Figure 15-6.

Level 4

The technology is similar to Level 2, except that soda ash is substituted for part of the lime treatment, permitting partial recycling of effluent. Eighty percent recycle has been demonstrated and is used in the development of plant performance estimates. The flow diagram is shown in Figure 15-7.

15.5.2 Equipment for Different Treatment Levels

Equipment Functions

Level 1 consists of flow equalization with first stage lime application followed by second stage lime application and lagoon settling. The final pH is adjusted with hydrochloric acid to the 6-9 range before discharge through an effluent monitoring system.

In Level 2, dual media filtration is added to provide better control of suspended solids, including heavy metal hydroxides, which are returned to the lagoons as filter backwash.

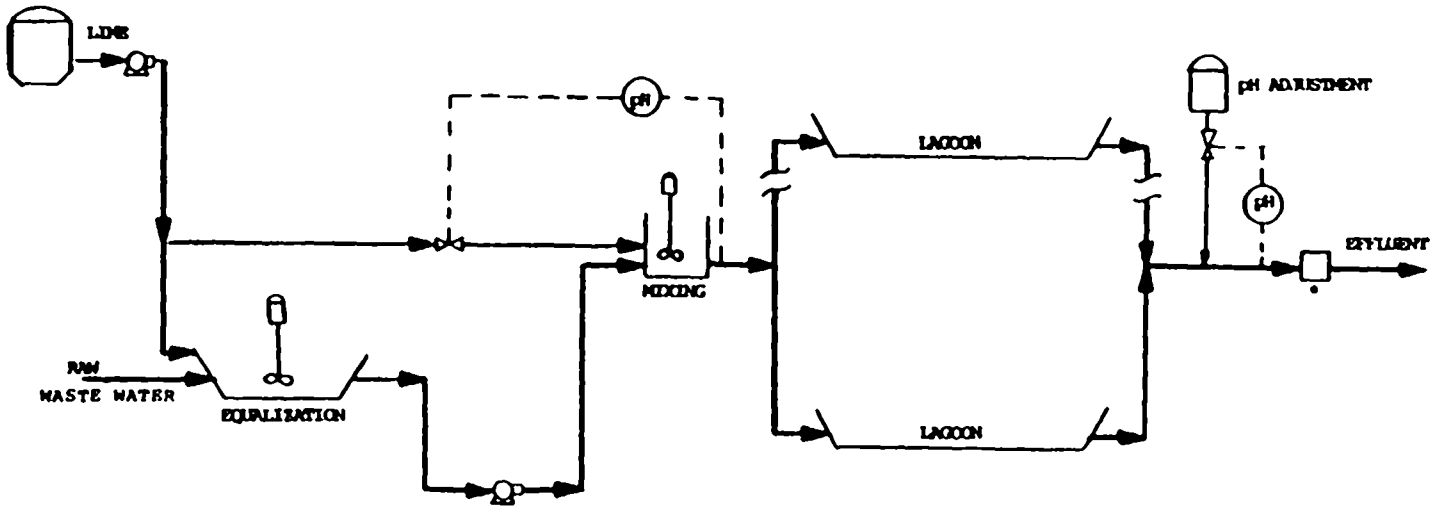

*Includes flow monitoring, pH monitoring and sampler.

Figure 15-4. Level 1 waste water treatment for the aluminum fluoride subcategory.

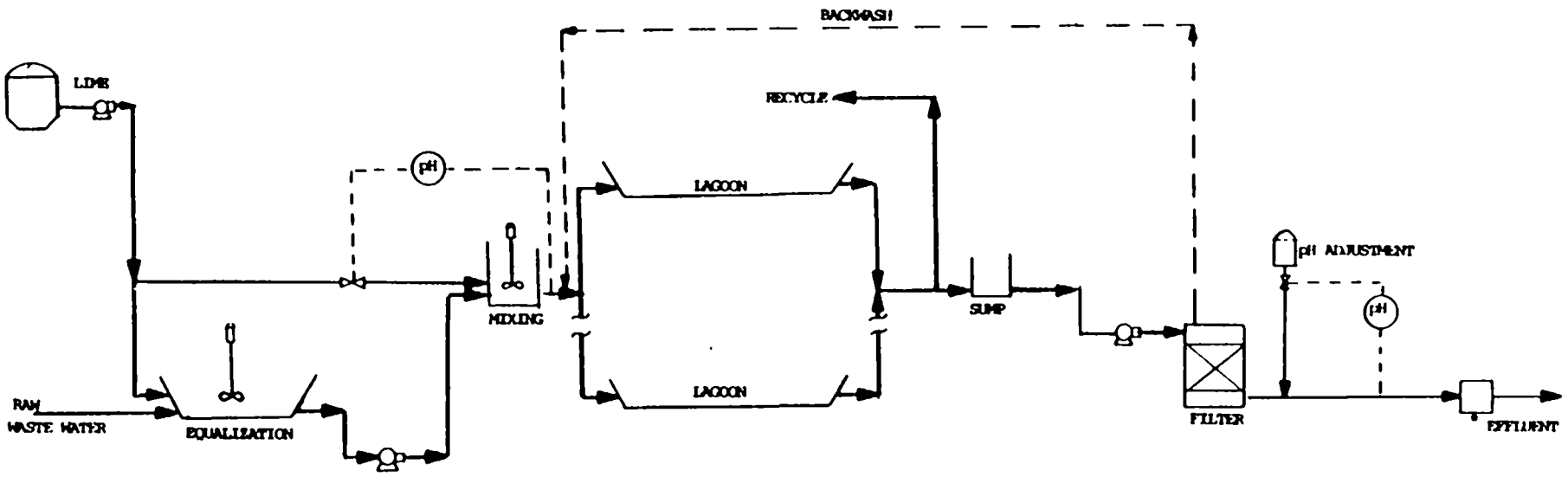

*Includes flow monitoring, pH monitoring and sampler.

Figure 15-5. Level 2 waste water treatment for the aluminum fluoride subcategory.

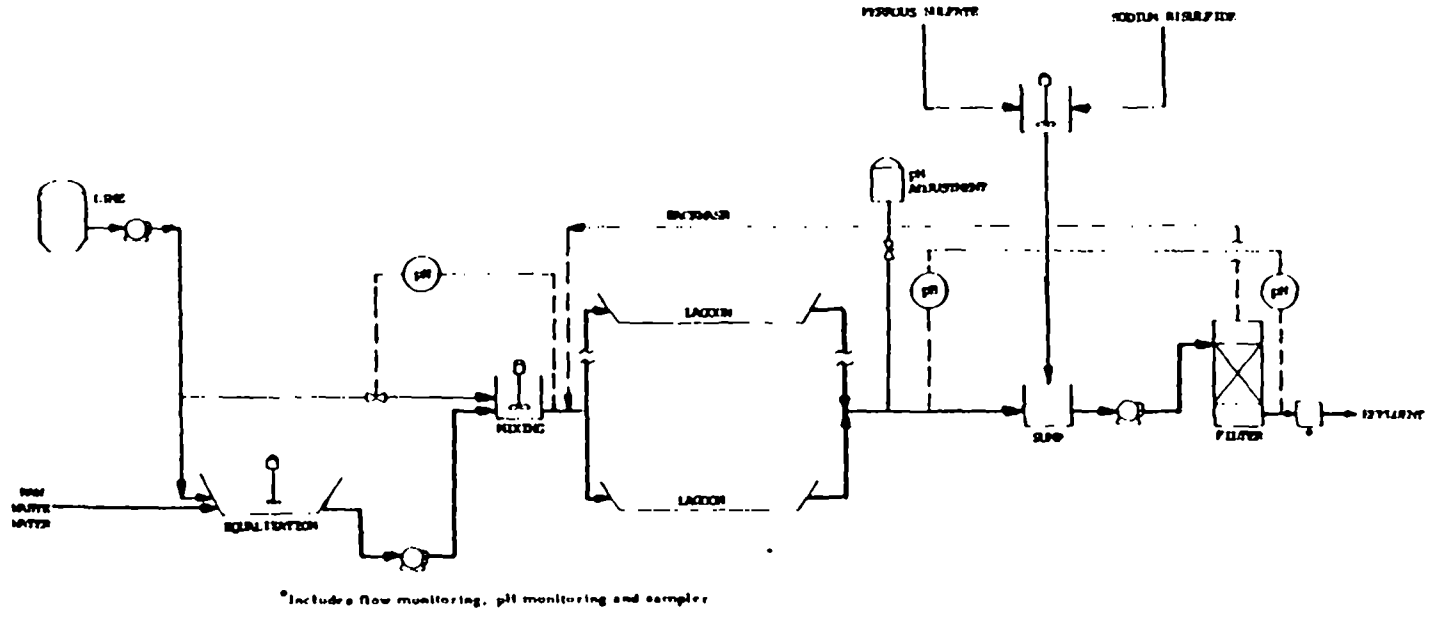

Figure 15-6. Level 3 waste water treatment for the aluminum fluoride subcategory.

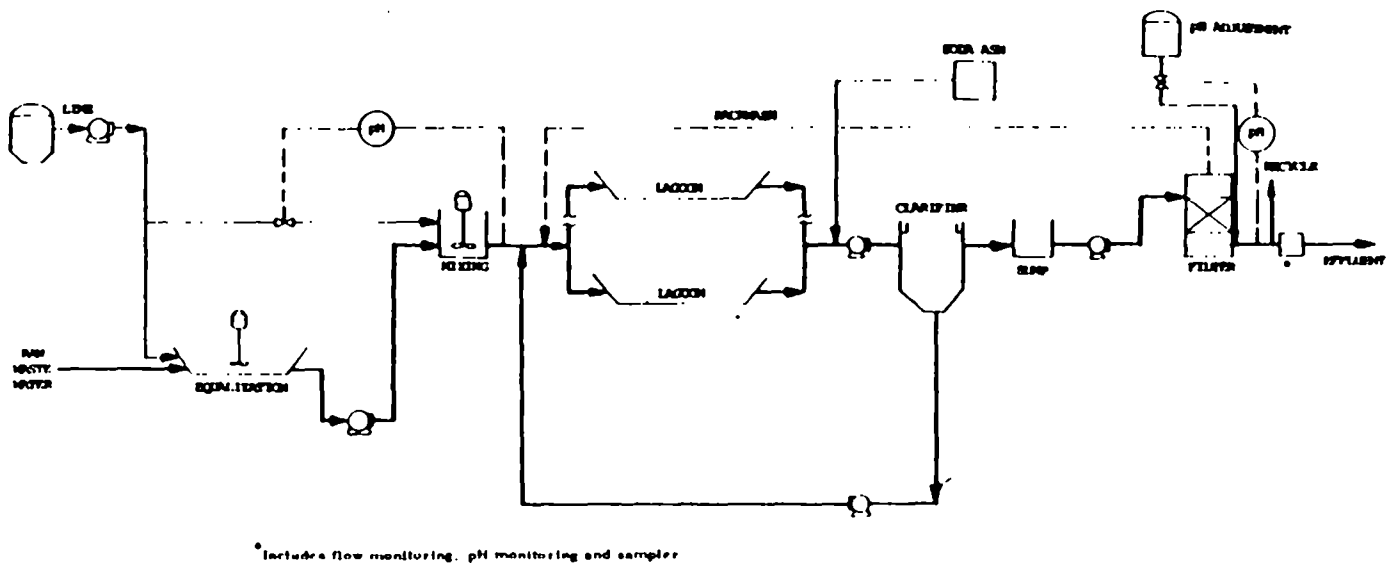

Figure 15-7. Level 4 waste water treatment for the aluminum fluoride subcategory.

In Level 3, ferrous sulfide is prepared on site from ferrous sulfate and sodium bisulfide and is added ahead of the dual media filter shown in Level 2, to reduce heavy metals (except chromium) to lower levels by sulfide precipitation.

Level 4 is a modification of Level 2 which allows partial recycling of final effluent by substituting soda ash for part of the lime treatment, and settling the resulting calcium carbonate in a clarifier before filtration. This step reduces the calcium saturation and permits recycling of effluent without serious scaling problems. Although a small blowdown of effluent is maintained for control of salinity the total mass discharge of toxic pollutants is less than that achieved in Level 2 due to the lower effluent flow rate.

Chemicals and Handling

In BPT (Level 1) and in Level 2, two-stage neutralization is accomplished with lime alone, using conventional handling equipment to deliver milk of lime to two points of application. In Level 3, a mixture of ferrous sulfate and sodium bisulfide is prepared in a well-ventilated space and applied with a conventional solution feeder to the inlet of the Level 2 dual media filter. With adequate ventilation and proper pH control in this chemical preparation, there are no unusual problems in chemical handling. In Level 4, soda ash is used to furnish part of the alkalinity, employing conventional dry chemical feeding equipment for this nonhazardous chemical.

Separation and Removal of Solids

At all levels of treatment the precipitated solids are removed mechanically from the lagoons at regular intervals and are piled in self-draining areas near the lagoons, on land provided for a ten-year operating period. Fluoride and toxic pollutants are in the insoluble or adsorbed form and do not constitute a hazard to the local environment when left at the plant site under controlled conditions, i.e., with leachate and permeate control.

Monitoring Requirements

Control of fluoride and toxic pollutants in the treatment process can be reasonably assured by pH and fluoride ion field testing equipment. At advanced levels very low values of toxic metals are detected best by atomic absorption methods, normally performed in commercial laboratories on carefully collected and composited samples.

15.6 TREATMENT COST ESTIMATES

15.6.1 General Discussion

A model plant concept was developed for the subcategory for treatment cost estimation purposes. The proposed BPT treatment system specifications are outlined subsequently.

Waste Water Flow

The range of waste water data on file shows flow variations from 4.58 m3/kkg of AlF3 to 19.7 m3/kkg of AlF3 (see Table 15-4). Based on these values, a unit flow of 11.9 m3/kkg of AlF3 was taken as the average for the waste water treatment model plant for cost estimating purposes.

Production

Six plants manufacture aluminum fluoride at a total production rate of 120,000 kkg/yr. Individual plant production rates range from a minimum of 38 kkg/yr to a maximum of 45,600 kkg/yr with an average of 24,300 and a median of 35,500 kkg/yr. For waste water treatment cost estimates, three production levels were selected as model plants. These three models reflect the production levels of the plants for which data is on file (excluding a small batch operation plant) and are 17,500 kkg/yr, 39,200 kkg/yr and 50,400 kkg/yr.

Pollutant Loadings

Observed pollutant loadings varied from 14 to 27 kg/kkg of AlF3 for suspended solids and from 5.4 to 39.5 kg/kkg of AlF3 for fluoride. The data sources are as follows:

Source of Data	TSS (kg/kkg-AlF3)	F (kg/kkg-AlF3)
EPA Document 1974 Ref-Screening and Verification	16-20	15-20
Phase - Plant Data	14-27	5.4-40

For model plants, pollutant loadings of 20 kg of total suspended solids and 18 kg of fluoride per kkg of AlF3 were used to establish treatment requirements.

Treatment Chemicals

Lime (CaO powder form) is added to precipitate fluoride and to raise the pH to a six to nine range. For each of the model plants, lime is added at 25 percent above the stoichiometric

requirements for fluoride precipitation. For advanced treatment, ferrous sulfide is added to give a concentration of 10 ppm. This acts as a polishing step to remove additional trace metals from the effluent. For a more advanced level of treatment, soda ash is added in addition to lime (CaO). The soda ash dosage was assumed to be 770 kg/kkg.

Variation in Flow and Pollution Loading

To indicate the effect on costs of higher and lower pollutant loadings, cost estimates were developed for one model plant (35,600 kkg-AlF3/yr) at 27 kg of TSS/kkg-AlF3 and 30 kg fluoride/kkg-AlF3 and 14 kg fluoride/kkg-AlF3. The waste water flow for these additional estimates was held constant as in the original mode (i.e., 15 m3/kkg-AlF3). Unit flows were also varied to monitor the sensitivity of cost to plant size. In this case, the pollutant loadings were assumed to be the same as in the original model. The range of waste water flows used were 10.1 m3/kkg to 22.8 m3/kkg.

Generation of Solids

From the pollutant loadings and treatment chemicals above, the waste treatment residue consists of 20 kg/kkg of suspended solids plus 46.2 kg/kkg from added chemicals. Thus, the total solids generated are 66.2 kg/kkg of product. After mechanical removal to self-draining piles, the combined fluoride As(CaF2) is reasonably stable at the reaction pH reached during lime treatment.

Cost Estimates

The estimated costs for models having three different production and four levels of treatment are given in Tables 15-11, 15-12 and 15-13. For these models, both the hydraulic and pollution loadings per unit of production are held constant over the entire range of production. Annual treatment cost as a function of production is shown graphically in Figure 15-8. Similarly, treatment cost per metric ton of product is given in Figure 15-9.

To indicate the effects on cost of varying the pollutant load per unit of product, cost estimates were developed for one medium-size production model plant at higher solids and pollutant (fluoride) loadings. For these models the hydraulic load per unit of production was held constant. The cost estimates for these models are given in Tables 15-14 and 15-15. The effects on costs of varying the unit pollutant load are shown graphically in Figures 15-10 and 15-11 at Levels 1 and 4. Variation of pollutant loads has a significant impact on Level 1, but had no effect on the incremental costs of treatment at Levels 2 and 3.

TABLE 15-11. MODEL PLANT TREATMENT COSTS

Subcategory ALUMINUM FLUORIDE

Production	15,900 metric tons per year (1)	(17,529 tons per year) (1)
	45 metric tons per day	(50 tons per day)
Waste water flow	540 cubic meters per day.	

	LEVEL OF TREATMENT (2)			
	FIRST	SECOND	THIRD	FOURTH
A. INVESTMENT COST				
Construction	$39,800	$10,000	$14,000	$20,500
Equipment in place, including piping, fittings, electrical work and controls.....	192,000	68,000	74,000	172,000
Monitoring equipment in place.....	9,200			
Engineering design and inspection.....	48,160	15,600	17,600	38,500
Incidentals, overhead, fees, contingencies...	48,160	15,600	17,600	38,500
Land.....	24,000			
TOTAL INVESTMENT COST	$361,120	$109,200	$123,200	$269,500
B. OPERATION AND MAINTENANCE COST				
Labor and supervision.	$56,000	$14,000	$14,000	$14,000
Energy.....	3,400	600	900	2,500
Chemicals.....	35,000		800	9,800
Maintenance.....	33,712	10,920	12,320	26,950
Taxes and insurance...	10,833	3,276	3,696	8,085
Residual waste disposal.....	5,400			
Monitoring, analysis and reporting.....	15,000	7,500	7,500	7,500
TOTAL OPERATION AND MAINTENANCE COST	$159,345	$36,296	$39,216	$68,835
C. AMORTIZATION OF INVESTMENT COST	$54,849	$17,766	$20,044	$43,847
TOTAL ANNUAL COST	$214,194	$54,062	$59,260	$112,682

(1) Production year is 350 days.
(2) First level represents the base cost of treatment system. Other levels represent the incremental cost above base cost.

TABLE 15-12. MODEL PLANT TREATMENT COSTS

Subcategory ALUMINUM FLUORIDE

Production	35,630 metric tons per year (1)	(39,249 tons per year) (1)
	101 metric tons per day	(112 tons per day)
Waste water flow	1200 cubic meters per day.	

	LEVEL OF TREATMENT (2)			
	FIRST	SECOND	THIRD	FOURTH
A. INVESTMENT COST				
Construction	$63,600	$15,000	$19,000	$34,000
Equipment in place, including piping, fittings, electrical work and controls.....	238,000	84,000	90,500	259,000
Monitoring equipment in place.....	9,000			
Engineering design and inspection.....	62,120	19,800	21,900	58,600
Incidentals, overhead, fees, contingencies...	62,120	19,800	21,900	58,600
Land.....	42,000			
TOTAL INVESTMENT COST	$476,840	$138,600	$153,300	$410,200
B. OPERATION AND MAINTENANCE COST				
Labor and supervision.	$56,000	$14,000	$14,000	$14,000
Energy.....	5,500	900	1,300	3,100
Chemicals.....	80,000		1,800	18,800
Maintenance.....	43,484	13,860	15,330	41,020
Taxes and insurance...	14,305	4,158	4,599	12,306
Residual waste disposal.....	12,500			
Monitoring, analysis and reporting.....	15,000	7,500	7,500	7,500
TOTAL OPERATION AND MAINTENANCE COST	$226,789	$40,418	$44,529	$96,726
C. AMORTIZATION OF INVESTMENT COST	$70,748	$22,550	$24,941	$66,739
TOTAL ANNUAL COST	$297,537	$62,968	$69,470	$163,465

(1) Production year is 350 days.
(2) First level represents the base cost of treatment system. Other levels represent the incremental cost above base cost.

TABLE 15-13. MODEL PLANT TREATMENT COSTS

Subcategory ALUMINUM FLUORIDE

Production 45,800 metric tons per year (1) (50,494 tons per year) (1)
130 metric tons per day (144 tons per day)
Waste water flow 1550 cubic meters per day.

	LEVEL OF TREATMENT (2)			
	FIRST	SECOND	THIRD	FOURTH
A. INVESTMENT COST				
Construction	$76,500	$20,500	$24,500	$43,000
Equipment in place, including piping, fittings, electrical work and controls.....	281,000	110,000	116,500	317,000
Monitoring equipment in place.....	9,200			
Engineering design and inspection.....	73,300	26,100	28,200	72,000
Incidentals, overhead, fees, contingencies...	73,300	26,100	28,200	72,000
Land.....	60,000			
TOTAL INVESTMENT COST	$573,100	$182,700	$197,400	$504,000
B. OPERATION AND MAINTENANCE COST				
Labor and supervision.	$56,000	$14,000	$14,000	$14,000
Energy.....	7,400	1,500	1,900	4,300
Chemicals.....	100,000		2,400	26,400
Maintenance.....	51,310	18,270	19,740	50,400
Taxes and insurance...	17,193	5,481	5,922	15,120
Residual waste disposal.....	16,000			
Monitoring, analysis and reporting.....	15,000	7,500	7,500	7,500
TOTAL OPERATION AND MAINTENANCE COST	$262,903	$46,751	$51,462	$117,720
C. AMORTIZATION OF INVESTMENT COST	$83,481	$29,725	$32,116	$82,000
TOTAL ANNUAL COST	$346,384	$76,476	$83,578	$199,720

(1) Production year is 350 days.
(2) First level represents the base cost of treatment system.
Other levels represent the incremental cost above base cost.

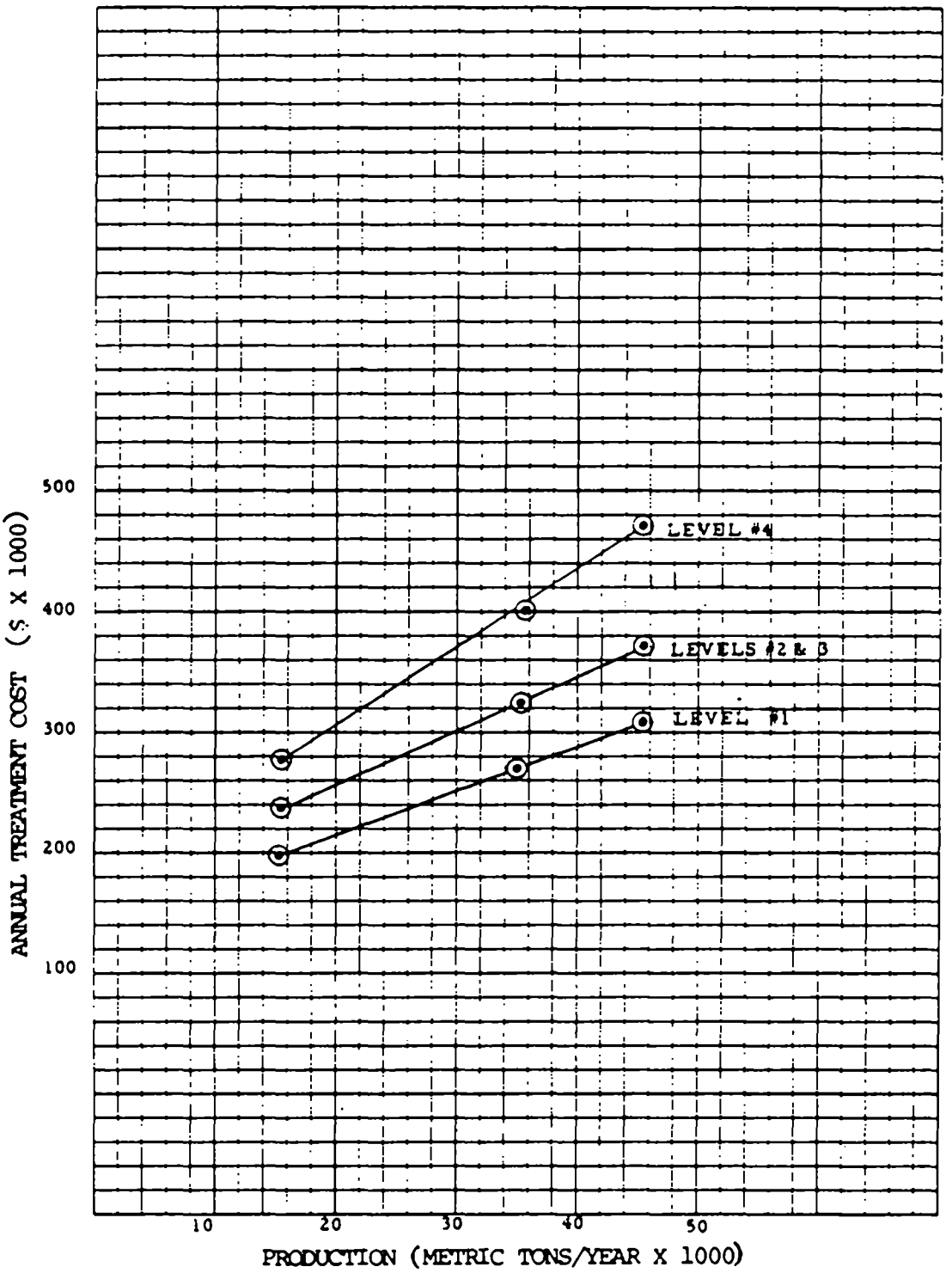

Figure 15-8. Annual treatment cost vs. production for the Aluminum Fluoride Subcategory

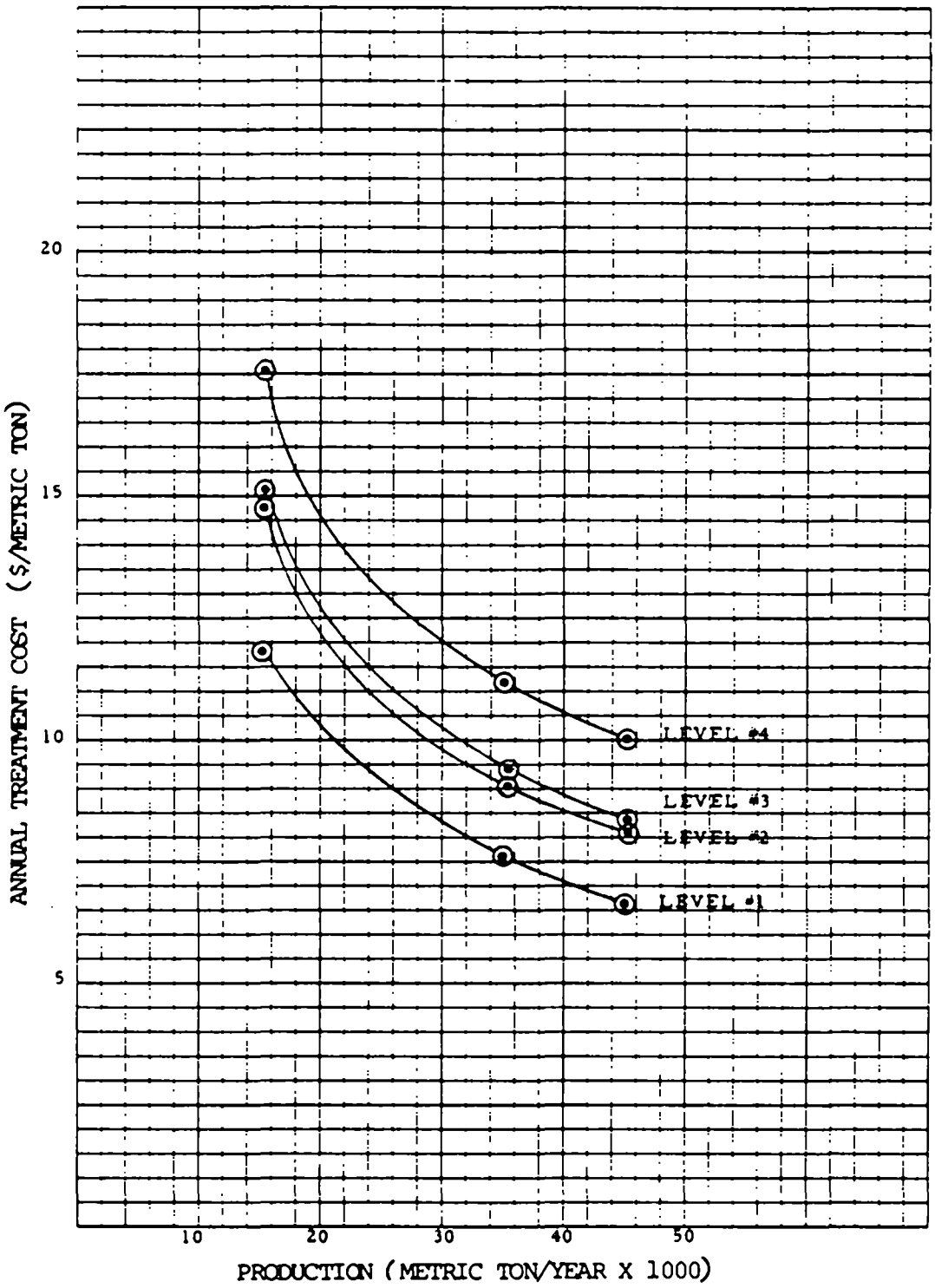

Figure 15- 9. Annual unit treatment cost vs. production for the Aluminum Fluoride Subcategory

TABLE 15-14. MODEL PLANT TREATMENT COSTS[3]

Subcategory ALUMINUM FLUORIDE

Production	35,600 metric tons per year[1]	(39,249 tons per year)[1]
	101 metric tons per day	(112 tons per day)
Waste water flow	1200 cubic meters per day.	

	LEVEL OF TREATMENT[2]			
	FIRST	SECOND	THIRD	FOURTH
A. INVESTMENT COST				
Construction	$82,000	$15,000	$19,000	$34,500
Equipment in place, including piping, fittings, electrical work and controls.....	241,000	84,000	90,500	270,000
Monitoring equipment in place.....	9,000			
Engineering design and inspection.....	66,400	19,900	21,900	60,900
Incidentals, overhead, fees, contingencies...	66,400	19,900	21,900	60,900
Land.....	66,000			
TOTAL INVESTMENT COST	$530,800	$138,600	$153,300	$426,300
B. OPERATION AND MAINTENANCE COST				
Labor and supervision.	$56,000	$14,000	$14,000	$14,000
Energy.....	5,500	900	1,300	3,100
Chemicals.....	130,000		1,800	31,500
Maintenance.....	46,480	13,860	15,330	42,630
Taxes and insurance...	15,924	4,158	4,599	12,789
Residual waste disposal.....	19,000			
Monitoring, analysis and reporting.....	15,000	7,500	7,500	7,500
TOTAL OPERATION AND MAINTENANCE COST	$287,904	$40,418	$44,529	$111,519
C. AMORTIZATION OF INVESTMENT COST	$75,622	$22,550	$24,941	$69,359
TOTAL ANNUAL COST	$363,526	$62,968	$69,470	$180,878

(1) Production year is 350 days.
(2) First level represents the base cost of treatment system. Other levels represent the incremental cost above base cost.
(3) Sensitivity Analysis - increased pollutant load.

TABLE 15-15. MODEL PLANT TREATMENT COSTS[3]

Subcategory ALUMINUM FLUORIDE

Production	35,600 metric tons per year[1]	(39,249 tons per year)[1]
	101 metric tons per day	(112 tons per day)
Waste water flow	1200 cubic meters per day.	

	LEVEL OF TREATMENT[2]			
	FIRST	SECOND	THIRD	FOURTH
A. INVESTMENT COST				
Construction	$56,900	$15,200	$19,200	$34,000
Equipment in place, including piping, fittings, electrical work and controls.....	221,000	94,000	90,500	259,000
Monitoring equipment in place.....	9,000			
Engineering design and inspection.....	57,380	19,900	21,900	58,600
Incidentals, overhead, fees, contingencies...	57,380	19,900	21,900	58,600
Land.....	30,000			
TOTAL INVESTMENT COST	$431,660	$138,600	$153,300	$410,200
B. OPERATION AND MAINTENANCE COST				
Labor and supervision.	$56,000	$14,000	$14,000	$14,000
Energy.....	5,500	900	1,300	3,100
Chemicals.....	60,000		1,800	14,610
Maintenance.....	40,166	13,860	15,330	41,020
Taxes and insurance...	12,949	4,158	4,599	12,306
Residual waste disposal.....	9,000			
Monitoring, analysis and reporting.....	15,000	7,500	7,500	7,500
TOTAL OPERATION AND MAINTENANCE COST	$198,615	$40,418	$44,529	$92,536
C. AMORTIZATION OF INVESTMENT COST	$65,350	$22,550	$24,941	$66,739
TOTAL ANNUAL COST	$263,965	$62,968	$69,470	$159,275

(1) Production year is 350 days.
(2) First level represents the base cost of treatment system. Other levels represent the incremental cost above base cost.
(3) Sensitivity Analysis - decreased pollutant load.

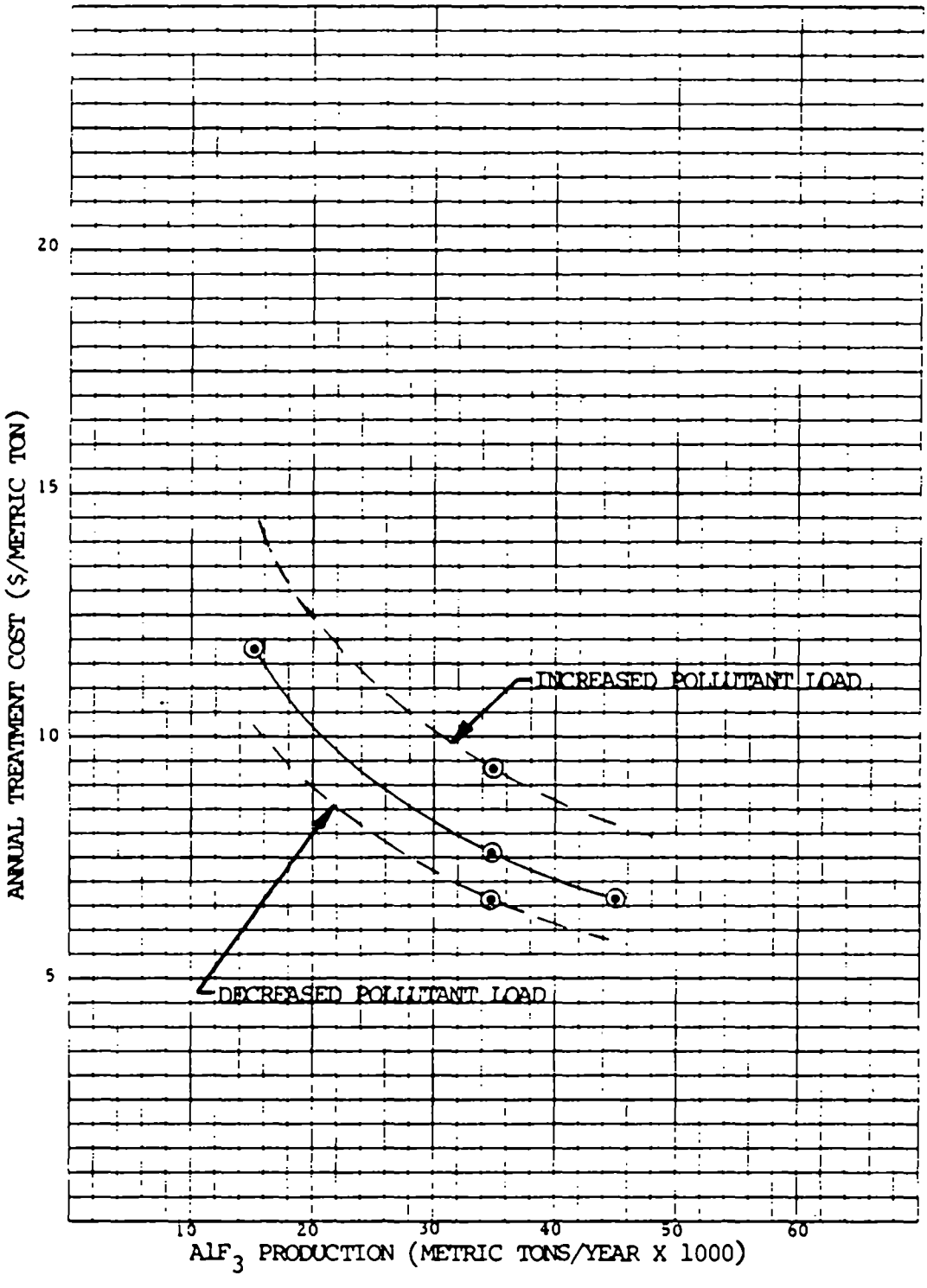

Figure 15-10. Effect of variation of pollutant load on treatment cost at level 1 technology

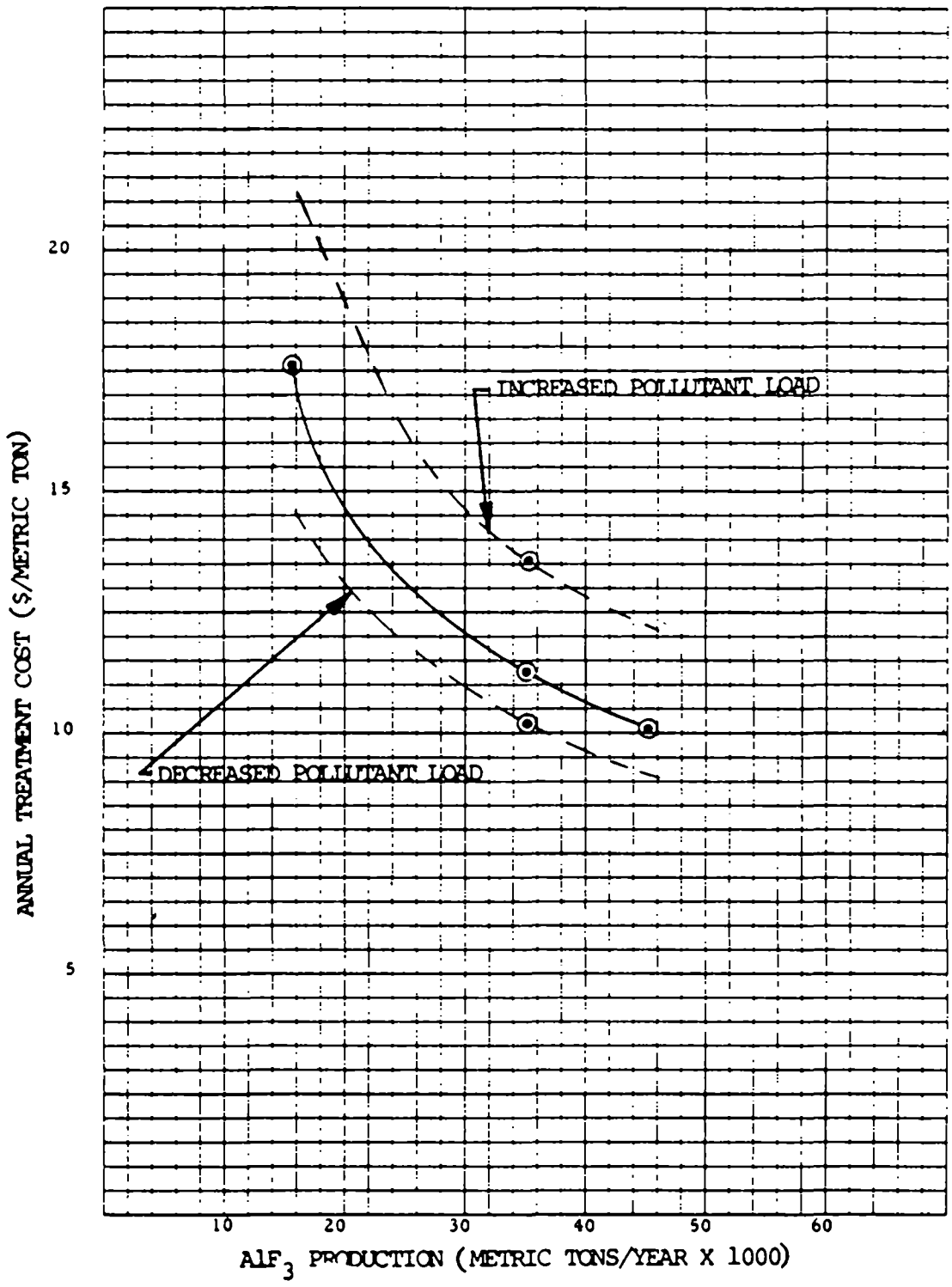

Figure 15-11. Effect of variation of pollutant load on treatment cost at level 4 technology

To judge the effects on cost of varying the hydraulic load per unit of production, cost estimates were developed for one medium-size production model plant at a higher and a lower hydraulic loadings. The pollutant load per unit of production was held constant for these models. Tables 15-16 and 15-17 show the cost estimates. At treatment Levels 2, 3, and 4 the effects on costs of varying the per unit hydraulic load are shown graphically in Figures 15-12, 15-13, and 15-14. Hydraulic load variation had no significant effect on the costs of treatment at Level 1. Table 15-18 presents a summary of the unit cost distribution between amortization and the operation and maintenance cost components at various production and levels of treatment. The effects on cost due to variations in unit pollutant and hydraulic loads are also shown in Table 15-18.

At the first level of treatment, chemicals, labor, and amortization have significant impact on the annual costs. At the second, third and fourth levels of treatment, the operation and maintenance cost comprises approximately two-thirds of the additional annual costs, and the remaining one-third is due to amortization.

Effects on annual costs arising from higher and lower pollutant loads per unit of product for a medium level of production model plant were studied. At high pollutant loading, the annual cost at the first and fourth levels of treatment increased approximately by 25 and 35 percent, respectively, over the base case cost. At the second and third levels of treatment, annual costs per unit of product are the same as for the original model.

At lower pollutant loadings, annual cost at the first level of treatment decreased by 15 percent below the base case cost. At other levels, annual costs per unit of product are the same as for the original model.

The annual costs arising from higher and lower hydraulic load per unit of product for a medium level of production model indicated that at the first level of treatment, variation of hydraulic loads had an insignificant impact on annual cost compared to the original model annual cost.

In the second, third, and fourth levels of treatment, at a higher hydraulic load, additional annual costs per unit of production increased by 24, 21, and 18 percent respectively over the original model costs.

At a lower hydraulic load, additional annual costs per unit of production decreased by 10 percent at second and third levels, and by 16 percent at the fourth level, compared to the original model cost.

TABLE 15-16. MODEL PLANT TREATMENT COSTS[3]

Subcategory ALUMINUM FLUORIDE

Production	35,600 metric tons per year[1] (39,249 tons per year)[1]	
	101 metric tons per day (112 tons per day)	
Waste water flow	2300 cubic meters per day.	

	LEVEL OF TREATMENT[2]			
	FIRST	SECOND	THIRD	FOURTH
A. INVESTMENT COST				
Construction	$66,100	$21,300	$25,300	$43,500
Equipment in place, including piping, fittings, electrical work and controls.....	256,300	117,600	124,300	321,000
Monitoring equipment in place.....	9,300			
Engineering design and inspection.....	66,220	27,720	29,900	72,900
Incidentals, overhead, fees, contingencies...	66,220	27,720	29,800	72,900
Land.....	42,300			
TOTAL INVESTMENT COST	$505,540	$194,340	$208,600	$510,300
B. OPERATION AND MAINTENANCE COST				
Labor and supervision.	$56,300	$14,300	$14,300	$14,300
Energy.....	7,400	1,500	1,900	4,700
Chemicals.....	80,000		1,800	18,800
Maintenance.....	46,354	19,404	20,860	51,030
Taxes and insurance...	15,166	5,821	6,258	15,309
Residual waste disposal.....	12,500			
Monitoring, analysis and reporting.....	15,000	7,500	7,500	7,500
TOTAL OPERATION AND MAINTENANCE COST	$232,420	$48,225	$52,318	$111,339
C. AMORTIZATION OF INVESTMENT COST	$75,417	$31,570	$33,939	$83,025
TOTAL ANNUAL COST	$307,837	$79,795	$86,257	$194,364

(1) Production year is 350 days.
(2) First level represents the base cost of treatment system. Other levels represent the incremental cost above base cost.
(3) Sensitivity Analysis - increased hydraulic load.

TABLE 15-17. MODEL PLANT TREATMENT COSTS[3]

Subcategory ALUMINUM FLUORIDE

Production	35,600 metric tons per year[1] (39,249 tons per year)[1] 101 metric tons per day (112 tons per day)
Waste water flow	1020 cubic meters per day.

	LEVEL OF TREATMENT[2]			
	FIRST	SECOND	THIRD	FOURTH
A. INVESTMENT COST				
Construction	$63,600	$14,500	$18,500	$30,000
Equipment in place, including piping, fittings, electrical work and controls.....	237,000	70,300	76,000	206,000
Monitoring equipment in place.....	9,000			
Engineering design and inspection.....	51,920	16,960	18,900	47,200
Incidentals, overhead, fees, contingencies...	51,920	16,960	18,900	47,200
Land.....	42,000			
TOTAL INVESTMENT COST	$475,440	$118,720	$132,300	$330,400
B. OPERATION AND MAINTENANCE COST				
Labor and supervision.	$56,000	$14,000	$14,000	$14,000
Energy.....	5,500	600	900	2,500
Chemicals.....	80,000		1,800	18,800
Maintenance.....	43,344	11,872	13,230	33,040
Taxes and insurance...	14,263	3,561	3,969	9,912
Residual waste disposal.....	12,500			
Monitoring, analysis and reporting.....	15,000	7,500	7,500	7,500
TOTAL OPERATION AND MAINTENANCE COST	$226,507	$37,533	$41,399	$85,752
C. AMORTIZATION OF INVESTMENT COST	$70,520	$19,315	$21,525	$53,756
TOTAL ANNUAL COST	$297,127	$56,848	$62,924	$139,508

(1) Production year is 350 days.
(2) First level represents the base cost of treatment system. Other levels represent the incremental cost above base cost.
(3) Sensitivity Analysis - decreased hydraulic load.

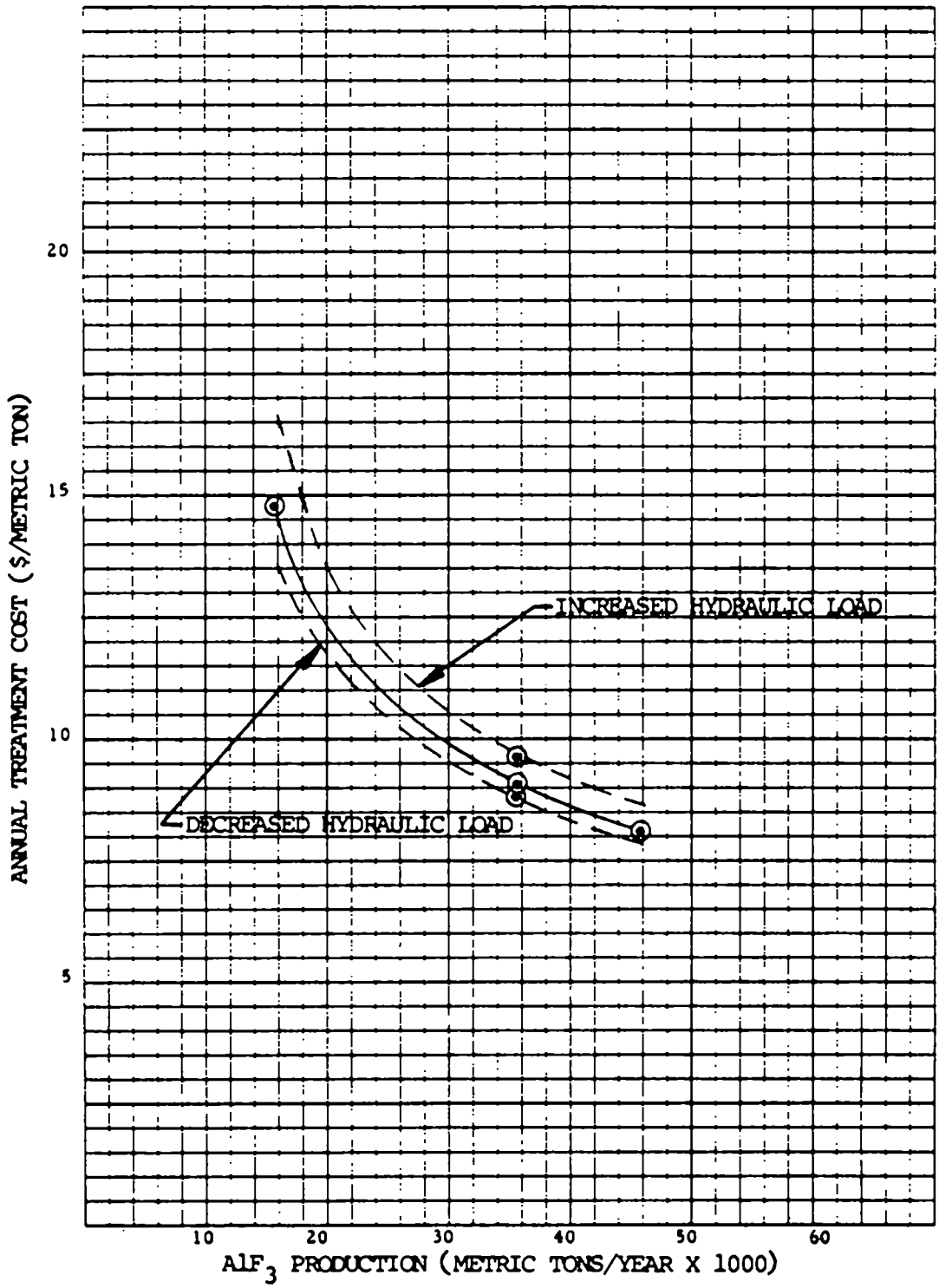

Figure 15-12. Effect of variation of hydraulic load on treatment cost at level 2 technology

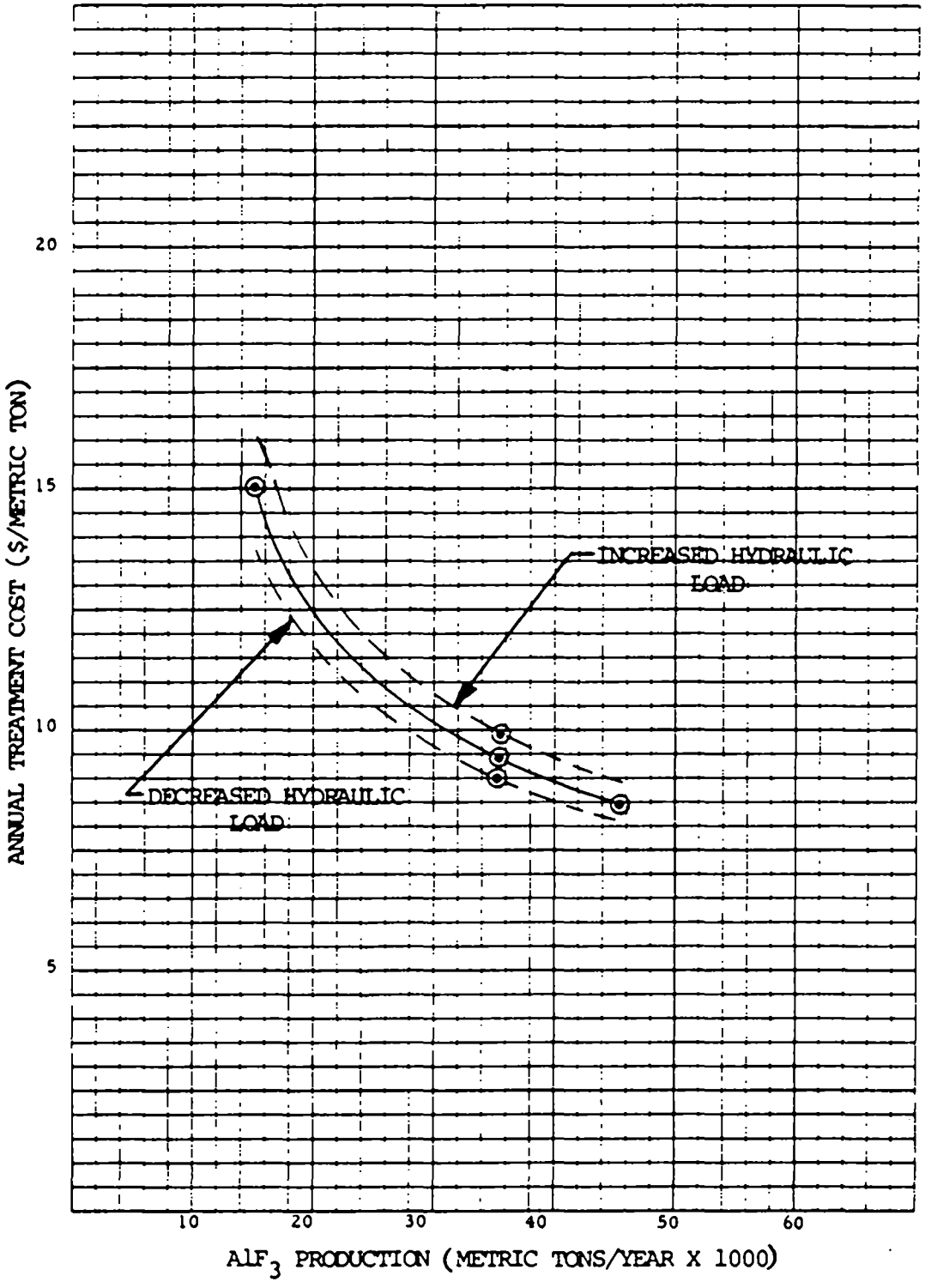

Figure 15-13. Effect of variation of hydraulic load on treatment cost at level 3 technology

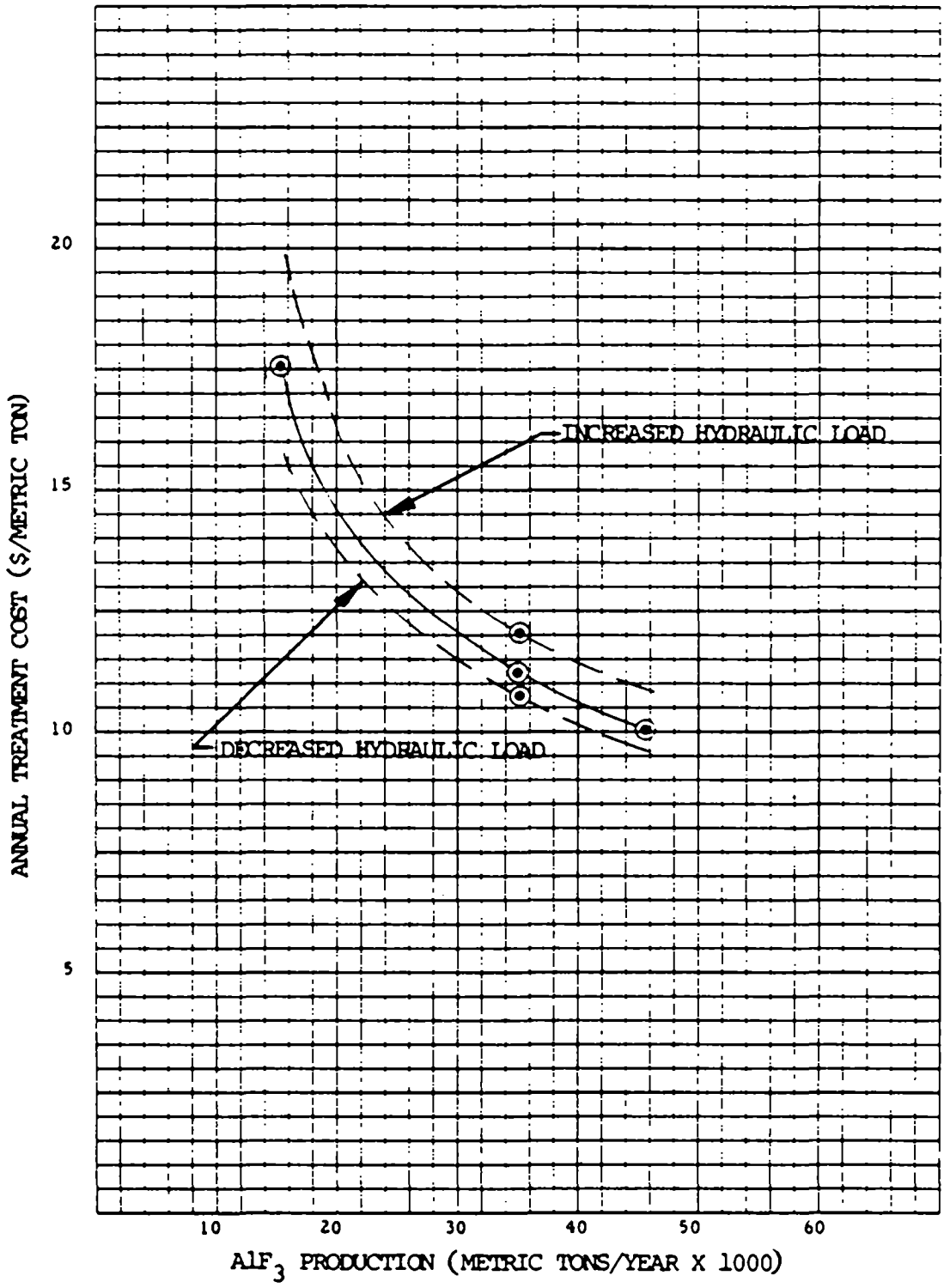

Figure 15-14. Effect of variation of hydraulic load on treatment cost at level 4 technology

TABLE 15-18. MODEL PLANT TREATMENT COSTS

Subcategory ALUMINUM FLUORIDE

COST ITEMS	PRODUCTION (kkg/yr)	FLOW (m3/day)	Annual Treatment Costs/Metric Ton of Product — LEVEL OF TREATMENT: FIRST	SECOND	THIRD	FOURTH
Annual Operation and Maintenance	15,900	690	10.02	2.28	2.47	4.33
	35,600	1,550	6.37	1.14	1.25	2.72
	45,800	1,990	5.74	1.02	1.12	2.57
	a 35,600	1,550	8.09	1.14	1.25	3.13
	b 35,600	1,550	5.58	1.14	1.25	2.60
	c 35,600	2,203	6.53	1.35	1.47	3.13
	d 35,600	1,064	6.37	1.05	1.16	2.41
Annual Amortization	15,900	690	3.45	1.12	1.26	2.76
	35,600	1,550	1.99	0.63	0.70	1.87
	45,800	1,990	1.82	0.65	0.70	1.79
	a 35,600	1,550	2.12	0.63	0.70	1.95
	b 35,600	1,550	1.84	0.63	0.70	1.87
	c 35,600	2,203	2.12	0.89	0.95	2.33
	d 35,600	1,064	1.98	0.54	0.60	1.51
Total Cost	15,900	690	13.47	3.40	3.73	7.09
	35,600	1,550	8.36	1.77	1.95	4.59
	45,800	1,990	7.56	1.67	1.82	4.36
	a 35,600	1,550	10.21	1.77	1.95	5.08
	b 35,600	1,550	7.41	1.77	1.95	4.47
	c 35,600	2,203	8.65	2.24	2.42	5.46
	d 35,600	1,064	8.35	1.60	1.77	3.92

a Increased pollutant load
b Decreased pollutant load
c Increased hydraulic load
d Decreased hydraulic load

15.7 BASIS FOR REGULATIONS

15.7.1 Evaluation of BPT Treatment Practices

EPA is proposing BPT limitations based on Level 1 treatment. All plants in this subcategory have installed BPT technology. Pollutants limited by the proposed BPT regulations are TSS, fluoride, chromium, nickel, and pH. The major pollutants previously regulated are TSS, fluoride, and aluminum. Aluminum is no longer considered a pollutant of concern due to its relatively nontoxic nature. The treatment proposed as the basis for BPT regulations will actually benefit from the presence of aluminum which will precipitate under mildly alkaline conditions and act as a coagulant to aid the removal of toxic metals and suspended solids.

15.7.2 BPT Effluent Limitations

Technology Basis

The Agency proposes BPT limitations for which the technology basis is, or is equivalent to, equalization, lime neutralization/alkaline precipitation, solids removal by settling or thickening, final pH adjustment, and discharge of the clarified effluent. This technology represents current practice in the Aluminum Fluoride industry and was therefore selected as the basis for the proposed BPT effluent limitations.

Flow Basis

The basis of flow for BPT limitations is estimated from data provided in the 308 questionnaires for three of the four complete plant responses received, including Plant #837, #251, and #705. Plant #188 was omitted in view of the batch process utilized for the manufacture of aluminum fluoride. The other three plants are continuous manufacturing processes.

The two major raw process waste water sources contributing to the total plant flow estimates include scrubber and work area washdown. These waste water sources are summarized in Table 15-4 for the three plants considered. The model plant flow for the AlF3 industry is estimated as the average total raw waste water flow for the three plants, and is used to estimate pollutant discharge loadings for the purpose of regulation. Exact measures of treated effluent from the aluminum fluoride industry are not available, since aluminum fluoride plants normally integrate process waste streams with those generated by the hydrofluoric acid process prior to treatment and discharge. The unit flow rates varied widely for the three plants in the range between 4.58 to 19.7 m3/kkg of product which is largely

dependant on the scrubber design and water utilization. The AlF_3 process in Plant #251 shares an SO_2 scrubber with the anhydrous hydrofluoric acid process. Waste water generation from this combined use scrubber was estimated on the basis of hydrofluoric acid utilization in the two processes.

The cleaning and work area washdown flow is similar for the three plants considered, ranging between 1.02 and 2.39 m^3/kkg of product.

The average total flow for the three plants is 11.9 m^3/kkg of product. This flow is used for the model plant in the aluminum fluoride subcategory.

Selection of Pollutants to be Regulated

The selection of pollutants for which specific numerical effluent limitations are proposed was based on an evaluation of raw waste data from the screening and verification sampling program. Pollutant data from the plant sampled during screening was used to determine the need for verification sampling. Verification sampling of Plant #705 and #251 provided additional pollutant raw waste concentration data needed to assess the magnitude of the pollution potential.

For conventional pollutants, the Agency has selected pH and total suspended solids for specific treatment and control. Fluoride was selected as the only nonconventional pollutant parameter because it is a major constituent in the process raw waste and is a pollutant of concern to the Agency. A limitation on aluminum is not proposed because this constituent of the process wastes will be effectively controlled by treatment required for removal of toxic metals.

Results of the screening and verification sampling are tabulated in Section 15.3.3 for the raw process waste stream. The pollutant concentration listed under verification is the highest value observed during sampling at the two plants visited. Toxic pollutants are listed based on their presence, during sampling, at detectable concentration levels. Pollutants from this list were considered candidates for regulation if their concentrations appeared at least once at approximately the lowest level estimated as treatable using any available technology appropriate for their removal. The only two metals which passed this test were chromium and nickel. The only two metals which passed this test were chromium and nickel. The metals arsenic, copper, selenium, and zinc were never observed in the raw waste at concentrations equal to or above the lowest level estimated as treatable as presented in Table 8-11 and therefore are not proposed for regulation.

Specific numerical effluent loading limitations are proposed for chromium and nickel for which the average concentration levels (Table 15-8) are considered treatable for at least one plant visited during sampling.

No limitation is being proposed for aluminum because of its relatively low toxicity and its beneficial effects in removing toxic metals by coprecipitation. In addition, control of the major toxic metal ions should provide adequate control of the aluminum concentration, since the treatment pH for BPT is in the region considered optimal for alkaline precipitation of most metal hydroxides.

Basis of Pollutant Limitations

Conventional and nonconventional parameters -

A. pH: The treated effluent is to be controlled within the range of 6.0 to 9.0. This limitation is based on the data presented in Appendix B of this report and the JRB Study (52).

B. TSS and Fluoride: Pollutant limitations for TSS and fluoride were based on the evaluation of data for the hydrofluoric acid subcategory. This evaluation is described in Section 12.7.2 under "Basis of Pollutant Limitations." There are no plants where the BPT treatment performance can be evaluated for the treatment of raw aluminum fluoride process waste water alone. Aluminum fluoride plants integrate raw process waste water with waste waters generated from the hydrofluoric acid process.

In view of the similar waste water characteristics, the effluent concentration from a common treatment system would be the same for TSS and fluoride whether it originates from the AlF3 industry or the HF industry. Therefore, a maximum 30-day average concentration for the AlF3 industry of 97 mg/l and 53 mg/l from the HF subcategory (Table 12-24) are proposed for TSS and fluoride, respectively. These are relatively high values that are unique to this industry. The variability factor ratio of 2.1 was selected based on the evaluation in the HF subcategory (Table 12-23). The unit effluent load limitation is determined as follows:

$$L \text{ (as kg/kkg)} = \frac{(Q)\ (C)}{1000}$$

Where C is the maximum 30-day average concentration in mg/l, Q is the unit flow in m3/kkg, and 1000 is the conversion factor for kg to grams. (Note: kg/m3 = 1000 mg/l.)

The 24-hour maximum is determined by the following relationship:

Maximum 30-day average (concentration or unit loading)	X VFR	=	24-hour maximum (concentration or unit loading)

In this case, the daily maximum TSS concentration is 2.1 X 97 mg/l = 200 mg/l. The unit loading is then

$$97 \text{ mg/l } (11.9 \text{ m3/kkg})\left(\frac{\text{kg/m3}}{1000 \text{ mg/l}}\right) = 1.2 \text{ kg/kkg}$$

In the same manner the concentration basis for fluorides is 2.1 X 53 mg/l = 110 mg/l. The unit loading is then

$$53 \text{ mg/l } (11.9 \text{ m3/kkg})\left(\frac{\text{kg/m3}}{1000 \text{ mg/l}}\right) = 0.63 \text{ kg/kkg}$$

The 24-hour maximum unit loading is determined by multiplying 2.1 times the 30-day average unit loading determined above.

Toxic pollutants - The effluent limitations proposed for the selected toxic pollutant control parameters are derived from three sources of information including 1) literature based treatability estimates (Section 8.1), 2) screening and verification sampling data, 3) a limited amount of long-term monitoring data from Plant #251.

The sampling results represent raw process waste pollutants observed during three days of composite sampling at each of the plants verified. An assessment of treatment system performance was not possible in view of the lack of representative effluent data available in the subcategory. Effluent data obtained during verification sampling is for treated waste water from the HF and AlF3 processes combined, since no plant is available which treats AlF3 wastes alone. Therefore, the screening and verification data may be used to determine candidate toxic pollutants for regulation without specifying achievable concentration limits which represent the AlF3 plant performance alone. However, review of the combined HF and AlF3 waste effluent data in Table 15-9 reveals that all toxic pollutants of concern are treatable within the levels of treatability defined in Section 8.1 for lime settling (BPT). Removal of toxic pollutants from one waste water or the other would not differ in light of the similar nature of HF and AlF3 wastes. Therefore, the literature estimates of treatability discussed in Section 8.1 have been used as the basis for determining specific numerical limitations for toxic pollutants.

A. Chromium: The literature treatability value of 0.1 mg/l from Table 8-11 for lime settling is considered to represent a maximum 30-day average concentration value for chromium in view of plant performance data in the HF and combined HF/AlF3 industries. The unit load limitation was calculated as follows:

$$(0.10\ mg/l)\ (11.9\ m3/kkg)\left(\frac{kg/m3}{1000\ mg/l}\right) = 0.0012\ kg/kkg$$

Since long-term monitoring data on chromium is not available, the variability factor ratio (VFR) of 2.0 was selected on the basis of lead monitoring data from Plant #251 presented in Tables A-10a and A-10c. This is justified by the similarity in the chemistry of lead, nickel, chromium, and other metals of concern under BPT treatment conditions. Therefore,

$$VFR = \frac{\text{VF of daily measurements}}{\text{VF of 30-day averages}} = \frac{3.12}{1.55}$$

$$VFR = 2.0$$

The daily maximum limitation for chromium was determined as follows:

$$(2.0)(0.0012\ kg/kkg) = 0.0024\ kg/kkg$$

The proposed effluent limitations on chromium are presented in Table 15-19 for BPT treatment.

B. Nickel: The raw waste concentration of nickel was observed as high as 0.29 mg/l (Section 15.3.3, Table of Maximum Concentrations Observed) to an average value of 0.22 mg/l at Plant #705 (Table 15-8). The literature treatability value of 0.20 mg/l from Table 8-11 for lime settling is used for the purpose of regulation in view of the absence of actual plant performance data. The limitation is determined as follows:

$$(0.20\ mg/l)\ (11.9\ m3/kkg)\left(\frac{kg/m3}{1000\ mg/l}\right) = 0.0024\ kg/kkg$$

Therefore, the 24-hour maximum load limitation is:

$$(2.0)(0.0024\ kg/kkg) = 0.0048\ kg/kkg$$

where 2.0 is the VFR as discussed for chromium.

C. Other metals: The concentration bases for arsenic, copper, selenium, and zinc are also presented in Table 15-19. These pollutants are listed to serve as guidance in cases where these pollutants are found to be of water quality concern. The

TABLE 15-19. PROPOSED LIMITATIONS
Aluminum Fluoride
Best Practicable Control Technology Currently Available
Waste Water Flow: 11.9 m3/kkg

Pollutant	Subcategory Performance (mg/l)	Concentration Basis (mg/l) VFR (1)	30-day Avg	24-hr Max	Effluent Limit (kg/kkg) 30-day Avg	24-hr Max
Conventional and Nonconventional Pollutants:						
Total Suspended Solids, TSS	97 (2)	2.1	97	200	1.2	2.4
Fluoride	53 (2)	2.1 (4)	53	110	0.63	1.3
Toxic Pollutants:						
Arsenic	0.50 (3)	2.0 (5)	0.50	1.0	— (6)	— (6)
Chromium	0.10 (3)	2.0 (5)	0.10	0.20	0.0012	0.0024
Copper	0.50 (3)	2.0 (5)	0.50	1.0	— (6)	-- (6)
Nickel	0.20 (3)	2.0 (5)	0.20	0.40	0.0024	0.0048
Selenium	0.20 (3)	2.0 (5)	0.20	0.40	— (6)	— (6)
Zinc	0.50 (3)	2.0 (5)	0.50	0.50	— (6)	-- (6)

(1) - VFR: ratio of the 24 hour variability factor to the 30 day variability factor.
(2) - 30 Day maximum average concentration based on the proposed HF subcategory regulation (Section 12.7.2).
(3) - The lower limit of the literature treatability estimate (Table 8-11) is used as the basis for the maximum 30-day average limitation and subcategory performance, since no plant is available where BPT treatment can be evaluated for the AlF3 waste water alone.
(4) - VFR based on HF subcategory evaluation.
(5) - VFR based on limited long term data.
(6) - No effluent limitation proposed.

concentration limitations are also based on literature treatability levels presented in Table 8-11. However in every case these treatability levels were above raw waste concentrations observed for each of these metals.

15.7.3 Basis for Proposed BCT Effluent Limitations

The BCT limitation (applicable only to TSS) was set equal to BPT because the addition of more treatment technology to remove conventional pollutants failed to pass the BCT cost comparison test (44 FR 44501 July 30, 1979) as described in Section 3.3.3.

15.7.4 Basis for Proposed BAT Effluent Limitations

The Application of Advanced Level Treatment

The Agency has analyzed the cost effectiveness of the base level systems (BPT) and the various advanced level options for conventional, nonconventional and toxic pollutant removal based on utilizing the cost estimates presented in this report. The economic impacts on the aluminum fluoride industry have been evaluated in detail and taken into consideration in the selection of the technology basis for the proposed BAT regulations.

For BAT, EPA is proposing limitations based on Level 2 treatment. This treatment option adds dual media filtration to remove additional toxic metals and fluorides. This level of treatment removes 300 pounds per year of toxic metals and 62,000 pounds per year of fluorides. Pollutants limited in proposed BAT regulations are fluoride, chromium, and nickel.

EPA considered limitations based on Level 3 and 4 sulfide precipitation and use of soda ash to increase recycle, respectively. These options were rejected because they remove only small incremental amounts of toxic pollutants in this subcategory.

Technology Basis

For BAT, the Agency proposes more stringent effluent limitations on fluoride and the toxic pollutants based on addition of dual media filtration or its equivalent to the BPT treatment system (Section 15.7.2).

Flow Basis

The same flow established for BPT in Section 15.7.2 is used in the development of the BAT effluent limitation. The flow used is 11.9 m3/kkg of product (Table 15-4).

Selection of Pollutants to be Regulated

The Agency has selected fluoride and the same two toxic pollutants identified in the proposed BPT regulations for the BAT regulations. The rationale for their selection is discussed in Section 15.7.2.

Basis of Pollutant Limitations

Nonconventional pollutants - The only nonconventional pollutant selected is fluoride. The limitation proposed for BAT is based on the evaluation of plant performance data discussed in Section 12.7.4 for the HF subcategory. A maximum 30-day average concentration of 30 mg/l for total fluoride was identified in the evaluation and is used here in Table 15-20 for establishing a numerical limitation. Selection of the concentration is based on the similarity between the waste stream from the HF and AlF3 subcategories.

The 24-hour maximum concentration is determined as follows from the VFR and maximum 30-day average concentration:

$$(2.1)(30\ mg/l) = 63\ mg/l$$

The effluent limitation for fluoride is determined as follows:

$$(30\ mg/l)\ (11.9\ m3/kkg)\left(\frac{kg/m3}{1000\ mg/l}\right) = 0.36\ kg/kkg$$

The 24-hour maximum limitation is determined in a similar manner as follows:

$$(63\ mg/l)\ (11.9\ m3/kkg)\left(\frac{kg/m3}{1000\ mg/l}\right) = 0.75\ kg/kkg$$

The variability factor of 2.1 used for the development of BAT limitations is the same used for BPT in Section 15.7.2.

The estimated performance of Level 3 and Level 4 alternative technologies are presented in Tables 15-21 and 15-22, respectively. The tables present the estimated maximum 30-day average and 24-hour maximum concentrations for the purpose of comparison with the proposed regulations.

Toxic pollutants - Addition of dual media filtration to the BPT level of treatment provides additional removal of the suspended metal hydroxides. Therefore, BAT provides more stringent control of the toxic pollutants. Since there is no directly applicable data on filter performance for the AlF3

TABLE 15-20. PROPOSED LIMITATIONS
Aluminum Fluoride
Best Available Technology
Waste Water Flow: 11.9 m^3/kkg

Pollutant	Subcategory Performance (mg/l)	VFR (1)	Concentration Basis (mg/l) Max 30-day Avg	Concentration Basis (mg/l) 24-hr Max	Effluent Limit (kg/kkg) Max 30-day Avg	Effluent Limit (kg/kkg) 24-hr Max
Nonconventional Pollutants:						
Fluoride	30 (3)	2.1	30	63	0.36	0.75
Toxic Pollutants:						
Arsenic	0.50 (5)	2.0	0.50	1.0	-- (4)	-- (4)
Chromium (2)	0.04 (5)	2.0	0.04	0.08	0.00048	0.00096
Copper	0.29 (5)	2.0	0.29	0.58	-- (4)	-- (4)
Nickel (2)	0.17 (5)	2.0	0.17	0.34	0.0020	0.0040
Selenium	0.18 (5)	2.0	0.18	0.36	-- (4)	-- (4)
Zinc	0.47 (5)	2.0	0.47	0.94	-- (4)	-- (4)

(1) - VFR: ratio of the 24-hour variability factor to the 30-day variability factor.
(2) - Also applicable for pretreatment standards for existing sources (PSES) which are expressed as concentration.
(3) - 30-day average calculated from the HF subcategory Table 12-21 and 12-25.
(4) - No effluent limitation proposed.
(5) - Literature treatability estimates.

TABLE 15-21. PERFORMANCE OF ALTERNATIVE TECHNOLOGY
Aluminum Fluoride
Level of Treatment: 3
Waste Water Flow: 11/9 m^3/kkg

Pollutant	Treatability (mg/l)	(1) VFR	Concentration Basis (mg/l)	
			Max 30-day Avg	24-hr Max
Nonconventional Pollutants:				
Fluoride	25	3.0	25	75
Toxic Pollutants:				
Arsenic	0.050	2.0	0.050	0.10
Chromium	0.040	2.0	0.040	0.080
Copper	0.050	2.0	0.050	0.10
Nickel	0.10	2.0	0.10	0.20
Selenium	0.18	2.0	0.18	0.36
Zinc	0.20	2.0	0.20	0.40

(1) - VFR: ratio of the 24-hour variability factor to the 30-day variability factor.

TABLE 15-22. PERFORMANCE OF ALTERNATIVE TECHNOLOGY
Aluminum Fluoride
Level of Treatment: 4
Waste Water Flow: 2.4 m^3/kkg (80% Recycle) (2)

Pollutant	Treatability (mg/l)	VFR (1)	Concentration Basis (mg/l)	
			Max 30-day Avg	24-hr Max
Nonconventional Pollutants:				
Fluoride	30	2.1	30	63
Toxic Pollutants:				
Arsenic	0.50	2.0	0.50	1.0
Chromium	0.04	2.0	0.04	0.08
Copper	0.29	2.0	0.29	0.58
Nickel	0.17	2.0	0.17	0.34
Selenium	0.18	2.0	0.18	0.36
Zinc	0.47	2.0	0.47	0.94

(1) - VFR: ratio of the 24-hour variability factor to the 30-day variability factor.
(2) - The effluent flow rate is 20 percent of the average influent or basis of flow (i.e., 0.20 x 11.9 m^3/kkg = 2.4 m^3/kkg).

industry, the literature treatability studies cited in Section 12.7.4 under "Toxic Pollutants" for the HF industry are used in the following determinations. The estimated percentage removal efficiency, presented in the aforementioned section, was applied to the 30-day average concentrations developed for the BPT limitations to establish the proposed BAT regulation. The basis for the BAT limitation on each toxic metal is given below.

A. Chromium: Filtration of the BPT effluent is estimated to reduce the chromium concentration by 60 percent. Therefore, the maximum 30-day average concentration would be 0.04 mg/l by the following relationship:

$$\text{BPT 30-day average concentration} \left(\frac{100\% - 60\%}{100\%}\right) = \text{BAT 30-day average concentration}$$

The limitation is determined numerically as follows:

$$\left(\frac{100 - 60}{100}\right) \; 0.10 \text{ mg/l} = 0.040 \text{ mg/l}$$

Application of the BAT model plant discharge rate results in the proposed chromium limitation as follows:

$$(0.040 \text{ mg/l}) \; (11.9 \text{ m3/kkg}) \left(\frac{\text{kg/m3}}{1000 \text{ mg/l}}\right) = 0.00048 \text{ kg/kkg}$$

and, the daily maximum limitation using the VFR value of 2.0 becomes

$$(2.0)(0.00048 \text{ kg/kkg}) = 0.00096 \text{ kg/kkg}$$

The VFR value of 2.0 used for BPT is similarly used for BAT because the variability of the filtrate quality is anticipated to be no greater than the observed variability of the unfiltered effluent. The variability factor was observed from long-term data at Plant #251 (Tables A-10a and A-10c). Treatability studies are being conducted by the EPA that assess the proposed BAT level of treatment.

B. Nickel: Filtration of the BPT effluent is estimated to reduce the nickel concentration by 14 percent. Therefore, the maximum 30-day average concentration would be 0.17 mg/l by the following calculation:

$$\left(\frac{100 - 14}{100}\right) (0.20 \text{ mg/l}) = 0.17 \text{ mg/l}$$

Application of the BAT model plant discharge rate gives the following load limitation for nickel:

$$(0.17\ mg/l)\ (11.9\ m3/kkg)\left(\frac{kg/m3}{1000\ mg/l}\right) = 0.0020\ kg/kkg$$

consequently the 24-hour maximum value is

$$(2.0)(0.0020\ kg/kkg) = 0.0040\ kg/kkg$$

as presented in Table 15-20.

C. Other metals: The concentration basis for arsenic, copper, selenium, and zinc are also given in Table 15-20 assuming 0, 42, 14, and 6 percent removal efficiency, respectively, by the addition of filtration to the BPT system. The values presented in Table 15-20 for these toxic pollutants are intended for use in cases where they are of concern from a water quality standpoint. However in all cases the treatability level was above the raw waste concentration levels observed.

15.7.5 Basis for Proposed New Source Performance Standards

Technology Basis

For NSPS, the Agency proposes the same treatment technology that is proposed for BAT.

Flow Basis

The same flow established for BPT and BAT is used in the development of the NSPS effluent limitations.

Selection of Pollutants to be Regulated

The Agency has selected TSS, fluoride and the same two toxic pollutants identified for the BAT regulations. The rationale for their selection is discussed in Section 15.7.2.

Basis of Pollutant Limitations

Conventional pollutants -

A. pH: For NSPS, the BPT limitation is retained. Control of the final effluent within the range of pH between 6.0 and 9.0 is required based on data presented in Appendix B of this report and the JRB Study (52).

B. TSS: In view of the absence of applicable performance data concerning TSS, a value of 68 mg/l was assumed from the HF subcategory for the maximum 30-day average concentration. The value was developed by assuming a 30 percent reduction in TSS over the 30-day average concentration estimated for BPT (97

mg/l). The assumption is based on pilot scale studies (41) which have demonstrated an average removal by filtration of approximately 30 percent from waste water containing suspended metal hydroxides after lime treatment.

A VFR of 2.1 is used on the basis of long-term data presented in Table 12-21 of the HF subcategory. The proposed 30-day average limitation on TSS is determined as follows:

$$(11.9\ m3/kkg)\left(\frac{kg/m3}{1000\ mg/l}\right) = 0.81\ kg/kkg$$

The 24-hour maximum consequently becomes kg/kkg) = 1.7 kg/kkg.

The proposed NSPS limitations are presented in Table 15-23.

Nonconventional pollutants - Fluoride is the only nonconventional pollutant and is set equal to the BAT limitation of 30 mg/l for NSPS.

Toxic pollutants - Waste water sources are expected to be the same as currently identified for new source AlF3 plants. Therefore, the proposed toxic pollutant limitations for NSPS have been set equal to the proposed BAT limitations by the Agency. BAT limitations for the toxic pollutants is discussed previously in Section 15.7.4.

15.7.6 Basis for Proposed Pretreatment Standards

Existing Sources

Pretreatment Standards for Existing Sources (PSES) are proposed by the Agency to equal BAT limitations. The pollutants to be limited are fluoride, chromium, and nickel.

New Sources

Pretreatment Standards for New Sources (PSNS) are proposed by the Agency to equal proposed BAT limitations. The pollutants to be regulated include fluoride, chromium, and nickel.

TABLE 15-23. PROPROSED LIMITATIONS
Aluminum Fluoride
New Source Performance Standards
Waste Water Flow: 11.9 m^3/kkg

Pollutant	Treatability (mg/l)	VFR (1)	Concentration Basis (mg/l) Max 30-day Avg	Concentration Basis (mg/l) 24-hr Max	Effluent Limit (kg/kkg) Max 30-day Avg	Effluent Limit (kg/kkg) 24-hr Max
Conventional and Nonconventional Pollutants:						
Total Suspended Solids, TSS	68 (2)	2.1	68	140	0.81	1.7
Fluoride, F (5)	30 (2)	2.1	30	63	0.36	0.75
Toxic Pollutants:						
Arsenic	0.50 (3)	2.0	0.50	1.0	-- (4)	-- (4)
Chromium (5)	0.04 (3)	2.0	0.04	0.08	0.00050	0.0010
Copper	0.29 (3)	2.0	0.29	0.58	-- (4)	-- (4)
Nickel (5)	0.17 (3)	2.0	0.17	0.34	0.0020	0.0040
Selenium	0.18 (3)	2.0	0.18	0.36	-- (4)	-- (4)
Zinc	0.47 (3)	2.0	0.47	0.94	-- (4)	-- (4)

(1) - VFR: ratio of the 24-hour variability factor to the 30-day variability factor.
(2) - 30-day average calculated from the HF subcategory Table 12-29.
(3) - Literature treatability estimates from BAT level treatment.
(4) - No effluent limitation proposed.
(5) - Also applicable for treatment standards for new sources (PSNS) which are expressed in concentration.

SECTION 16

CHROME PIGMENTS INDUSTRY

16.1 INDUSTRY PROFILE

16.1.1 General Description

Chrome pigments are a family of inorganic compounds primarily used as colorants in a number of industries. These pigments are used in paints, ceramics, floorcovering products, ink, paper, and cements. However, certain chromium compounds (i.e., oxides) may be used as raw materials in the manufacture of certain metals and alloys. Chrome pigments vary substantially in their chemical makeup. The various types include chrome yellow, chrome orange, molybdate chrome orange, anhydrous and hydrous chromium oxide and zinc yellow. The industry data profile is given in Table 16-1 and the status of the regulations are shown in Table 16-2.

16.1.2 General Process Description and Raw Materials

The general manufacturing process for each of the above compounds is given below.

Chromium Oxide

This pigment consists of two compounds; anhydrous and hydrated chrome oxide (Guigets Green). The amount of the anhydrous salt oxide produced is approximately ten times the amount of hydrated chromic oxide produced. It is offered in a narrow range of shades from light yellowish to dark bluish green.

Anhydrous oxide is almost pure chromium oxide and the commercial grade consists of a minimum of 98.5 percent Cr203. It is prepared by calcination of sodium dichromate with sulfur or carbon according to the reactions given below:

$$Na_2Cr_2O_7 + S = Cr_2O_3 + Na_2SO_4 \quad (1)$$

TABLE 16-1. SUBCATEGORY PROFILE DATA SUMMARY[1]

SUBCATEGORY	CHROME PIGMENTS
Total subcategory capacity rate	63,000 kkg/year
Total subcategory production rate	64,500 kkg/year
Number of plants in this subcategory	12
308 Data on file for	5
With total capacity of	
With total production of	39,800 kkg/year
Representing capacity	
Representing production	62 percent
Plant production range:[2]	
Minimum	100 kkg/year
Maximum	18,000 kkg/year
Average production	6,300 kkg/year
Median production	6,400 kkg/year
Average capacity utilization	78 percent
Plant age range:	
Minimum	38 years
Maximum	60 years
Wastewater flow range:	
Minimum	800 cubic meters/day
Maximum	11,363 cubic meters/day
Volume per unit product:	
Minimum	32 cubic meters/kkg
Maximum	170 cubic meters/kkg

(1) Sources of data are Stanford Research Institute, Directory of Chemical Producers, U.S.A., 1977, U.S. Department of Commerce, Current Industrial Reports, December 1977; Energy and Environmental Analysis, Inc.; Draft Report, "Preliminary Economic Assessment of Effluent Limitations in the Inorganic Chemical Industry," June, 1978 and "Economic Analysis of Proposed Revised Effluent Guidelines and Standards for the Inorganic Chemicals Industry," March, 1980.

(2) Based on production at 11 plants, all other figures are based on 308 Questionnaires.

TABLE 16-2. STATUS OF REGULATIONS - EFFLUENT LIMITATION GUIDELINES

SUBCATEGORY Chrome Pigments

SUBPART AH (40 CFR 415.340, 5/22/75)

		STANDARDS					
		BPCTCA *		BATEA		NSPS	
Product Process	Parameters	Max.[1] kg/kkg (mg/l)	Avg.[2] kg/kkg (mg/l)	Max. kg/kkg (mg/l)	Avg. kg/kkg (mg/l)	Max. kg/kkg (mg/l)	Avg. kg/kkg (mg/l)
Chrome Pigment	TSS	5.1 (76.1)*	1.7 (25.4)	Reserved		Reserved	
	Cr (T)	0.10 (1.5)	0.034 (0.5)				
	Cr^{+6}	0.010 (0.2)	0.0034 (0.1)				
	Pb	0.42 (6.3)	0.14 (2.1)				
	Zn	0.72 (10.8)	0.27 (4.0)				
	CN	0.010 (1.5)	0.0034 (0.5)				
	CN(A)	0.10 (0.2)	0.034 (0.1)				
	Fe	0.72 (10.8)	0.27 (4.0)				

*Sections 415.340, 415.341, and 415.342 were revoked by the Agency (41 FR 51601, November 23, 1976).

[1]Max. = Maximum of any one day.

[2]Avg. = Average of daily values for thirty consecutive days.

* flow basis 67,000 l/kkg.

$$Na_2Cr_2O_7 + 2C = Cr_2O_3 + Na_2CO_3 + CO \quad (2)$$

The use of sulfur as the reducing agent eliminates CO_2 and CO emissions but increases the sulfates in the raw waste as well as producing SO_2 and SO_3 in the off-gases. In the manufacturing process using sulfur, the raw materials consisting of sodium dichromate and sulfur are mixed with water and the resultant solution is fed to a kiln. The material is heated and the reacted materials from the kiln are slurried with water, filtered, washed, dried, ground, screened, and packaged. The effluent gases from the kiln containing sulfur dioxide and sulfur trioxide are wet scrubbed before venting to the atmosphere.

A general process flow diagram of the preparation of anhydrous chrome oxide is given in Figure 16-1.

Hydrated chromium oxide, $Cr_2O_3.2H_2O$ or $Cr_2O(OH)_4$, also known as chromium hydrate and Guigets Green, is a brilliant bluish green. It is made by reacting sodium dichromate with boric acid as follows:

$$2Na_2Cr_2O_7 + 8H_3BO_3 = 2Cr_2O_3.2H_2O + 2Na_2B_4O_7 + 8H_2O + 3O_2 \quad (3)$$

The raw materials are blended in a mixer and then heated in an oven at about 550 degrees C. The reacted material is slurried with water and filtered. The filtered solids are washed with water, dried, ground, screened, and packaged. The filtrate and the wash water are treated with sulfuric acid to recover boric acid according to the reaction given below:

$$Na_2B_4O_7 + H_2SO_4 + 5H_2O = 4H_3BO_3 + Na_2SO_4 \quad (4)$$

A waste stream containing some boric acid and sodium sulfate is discharged from the boric acid unit. Figure 16-2 is a generalized flow diagram of the process.

Chrome Yellow and Chrome Orange

Chrome yellow is one of the more important synthetic pigments. The chrome yellows cover the range of hues from light greenish yellow to reddish medium yellow and consist mainly of lead chromate. They are made by reacting sodium dichromate, caustic soda, and lead nitrate. The reactions are given as:

$$2HNO_3 + PbO = Pb(NO_3)_2 + H_2O \quad (5)$$

$$Na_2Cr_2O_7 + 2NaOH + 2Pb(NO_3)_2 = 2PbCrO_4 + 4NaNO_3 + H_2O \quad (6)$$

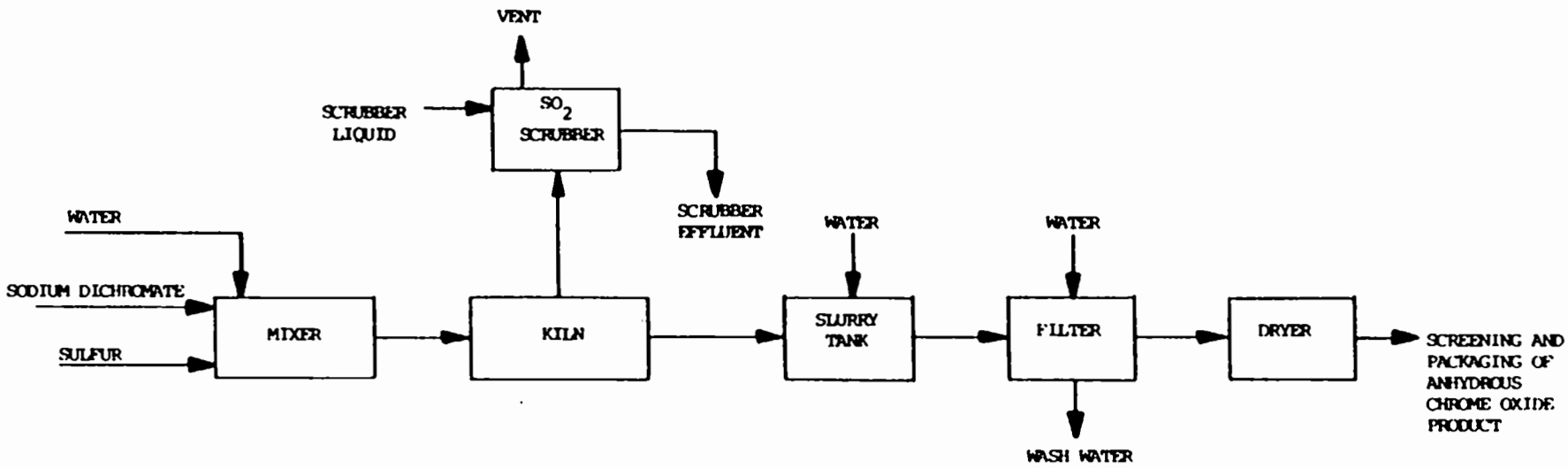

Figure 16-1. General process diagram for production of anhydrous chrome oxide.

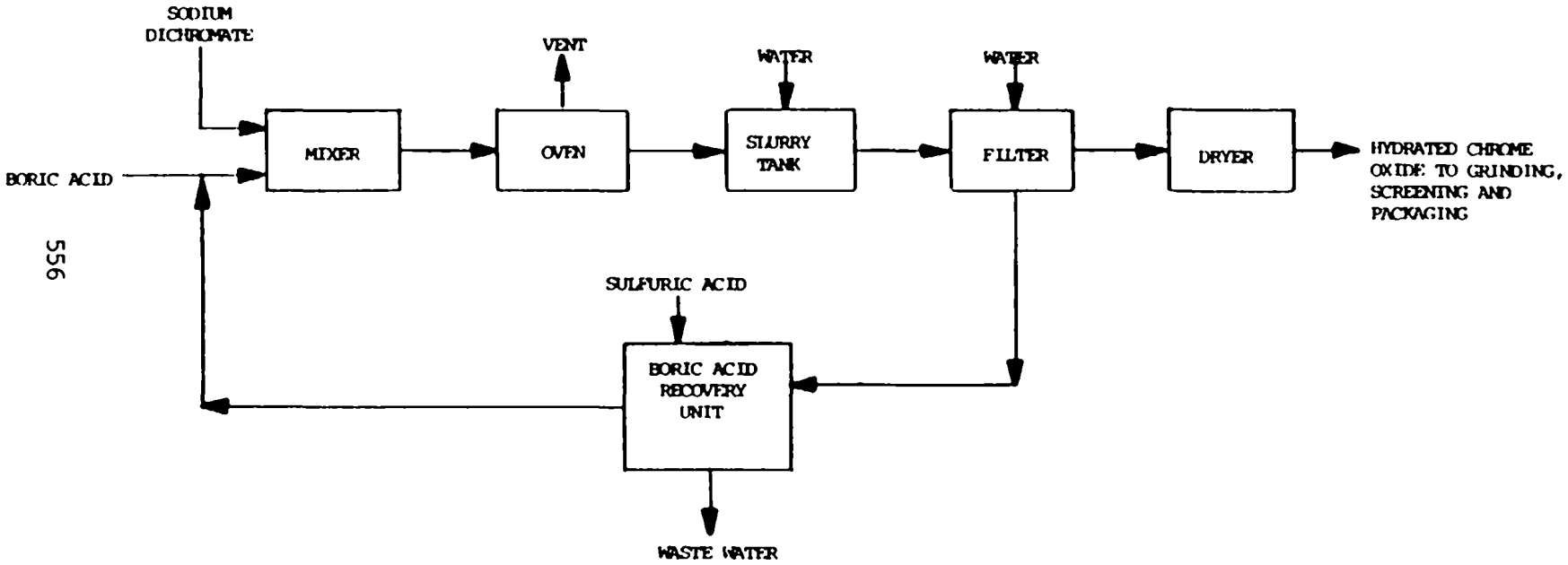

Figure 16-2. General process diagram for production of hydrated chromic oxide.

Lead chromate is formed as a precipitate during the reaction. It is filtered and treated with chemicals for development of desired specific pigment properties, dried, milled, and packaged. The filtrate from the filtration operation is sent to the waste water treatment facility. A flow diagram of the chrome yellow manufacturing process is shown in Figure 16-3.

Molybdenum Orange

Molybdenum orange is made by the coprecipitation of lead chromate ($PbCrO_4$) and lead molybdate ($PbMoO_4$). The resulting pigments are more brilliant than chrome oranges.

The process consists of dissolving molybdic oxide in aqueous sodium hydroxide and adding sodium chromate. The solution is mixed and reacted with a solution of lead nitrate. The precipitate from the reaction is filtered, washed, dried, milled and packaged. The filtrate is sent to the treatment facility.

The reaction is given as follows:

$$MoO_3 + 2NaOH = Na_2MoO_4 + H_2O \quad (7)$$

$$PbO + 2HNO_3 = Pb(NO_3)_2 + H_2O \quad (8)$$

$$Na_2MoO_4 + Pb(NO_3)_2 = PbMoO_4 + 2NaNO_3 \quad (9)$$

$$Na_2CrO_4 + Pb(NO_3)_2 = PbCrO_4 + 2NaNO_3 \quad (10)$$

$$PbMoO_4 + PbCrO_4 = PbCrO_4.PbMoO_4 \quad (11)$$

A simplified flow diagram for the manufacture of molybdenum orange is given in Figure 16-4.

Chrome Green

Chrome greens are a coprecipitate of chrome yellow and iron blues. They include a wide variety of hues from very light to very dark green. Iron blues are manufactured by reaction of aqueous solution of iron sulfate and ammonium sulfate with sodium hexacyanoferrate. The precipitate formed is separated and oxidized with sodium chlorate or sodium chromate to form iron blues ($Fe\ NH_4\ .Fe\ CN\ 6$). Chrome green is produced by mechanically mixing chrome yellow and iron blue pigments in water. The coprecipitate formation of chrome green is given by:

$$PbCrO_4 + Fe(NH_4).Fe(CN)_6 = PbCrO_4Fe(NH_4).Fe(CN)_6 \quad (12)$$

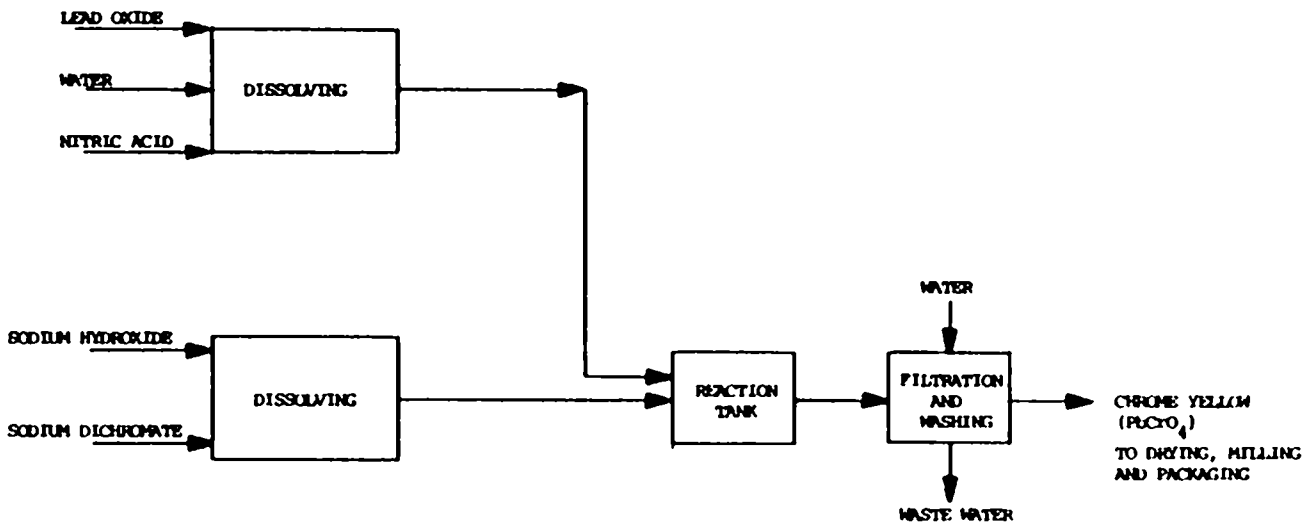

Figure 16-3. General process diagram for production of chrome yellow.

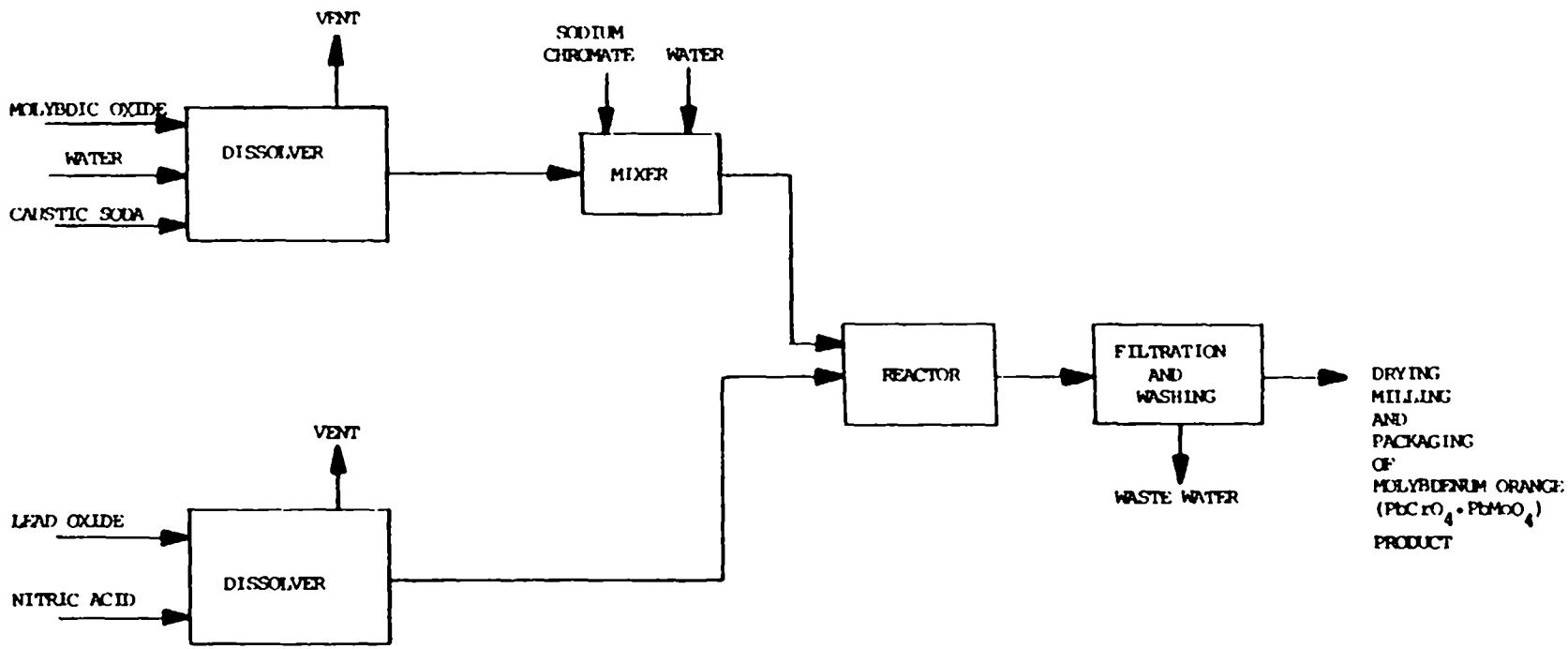

Figure 16-4. General process diagram for production of molybdenum orange.

Figure 16-5 gives a process flow diagram for the manufacture of chrome green.

Zinc Yellow

Zinc yellow, also called zinc chromate, is a greenish yellow pigment. It is a complex compound of zinc, potassium, and chromium which has the approximate composition $4ZnO.K_2O.4CrO_3.3H_2O$. It is made by the reaction of zinc oxide, hydrochloric acid, sodium dichromate, and potassium chloride. Zinc yellow is formed as a precipitate and is filtered, washed, dried, milled, and packaged for sale. The reactions are given as:

$$2KCl + 2HCl + 2Na_2Cr_2O_7.H_2O = K_2Cr_4O_{13} + 4NaCl + 3H_2O \quad (13)$$

$$4ZnO + K_2Cr_4O_{13} + 3H_2O = 4ZnO.K_2O.4CrO_3.3H_2O \quad (14)$$

A general flow diagram of the manufacturing process is given in Figure 16-6.

16.2 WATER USE AND WASTE SOURCE CHARACTERISTICS

16.2.1 Water Use

In the chrome pigments industry, water is used primarily for noncontact cooling, washing the precipitated product, and as boiler feed for steam generation. In some cases, water is introduced into the reactor along with the raw materials.

In addition, substantial quantities of water may be used in cleaning equipment. This occurs during product changes at plants manufacturing a number of pigments. This partially accounts for the increased unit water use at larger plants, since these plants have the most complex product mix.

In anhydrous and hydrated chrome oxide manufacture, water is used for slurrying of the reaction product and in scrubbing the reactor vent gases. Table 16-3 is a summary of water usage at different pigment plants in the chrome pigments subcategory.

16.2.2 Waste Sources

Some plants produce different pigment products sequentially in the same equipment. At a few plants, the different pigment products are manufactured concurrently and the waste waters combined and treated at a single facility. A generalized flow diagram applicable to all chrome pigment plants

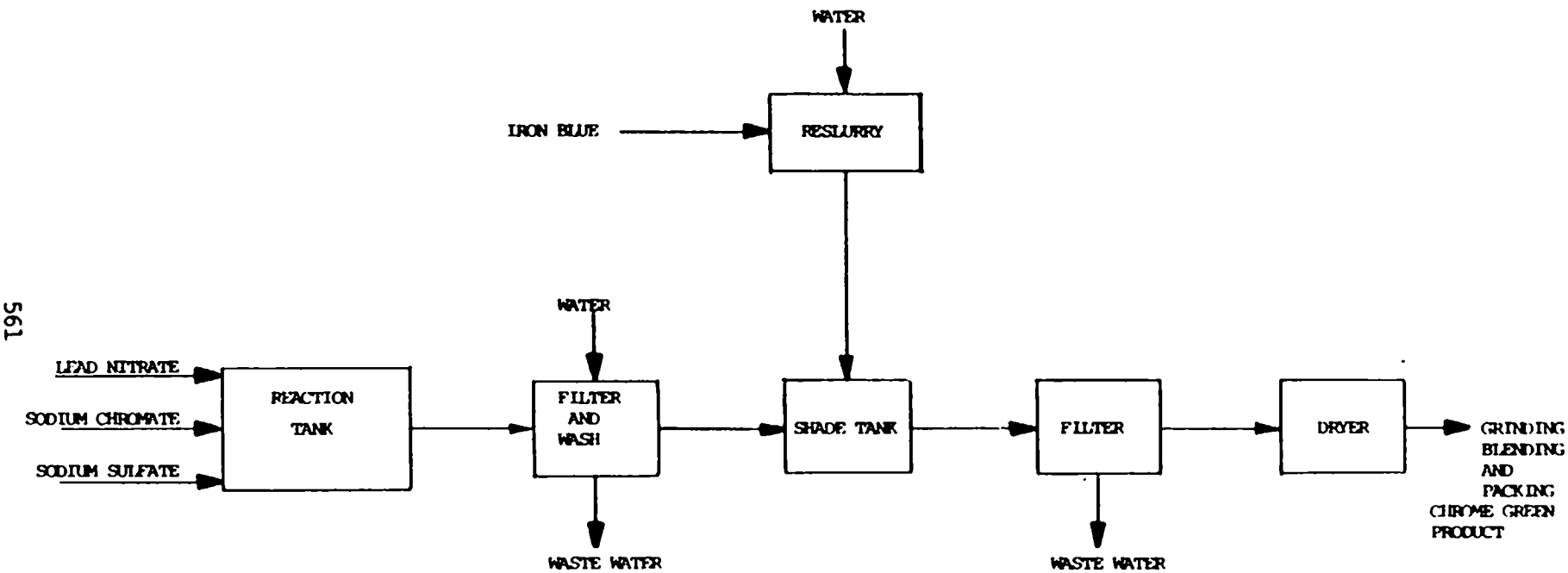

Figure 16-5. General process diagram for production of chrome green.

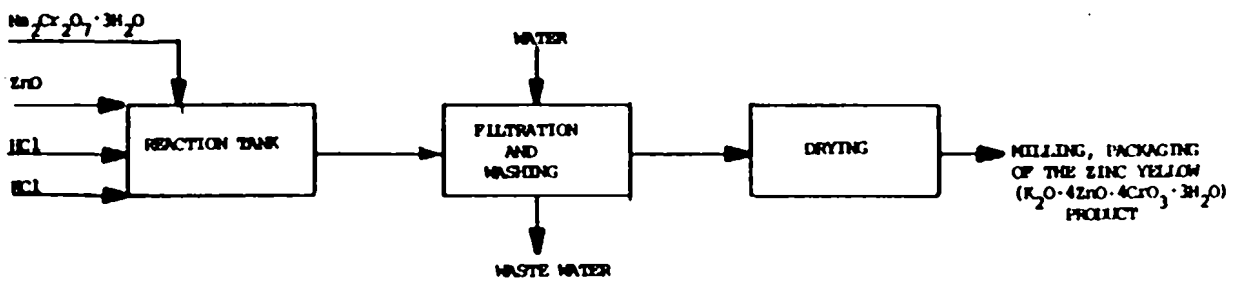

Figure 16-6. General process diagram for production of zinc yellow.

TABLE 16-3. WATER USAGE IN THE CHROME PIGMENTS SUBCAGEGORY[1]

USE	UNIT FLOW (m^3/kkg) Plant Designation		
	#464	#436	#214
Noncontact cooling	9.50	6.45	NA
Direct process contact	18.6	147	32.6
Indirect process contact	7.18	NA[2]	NA
Maintenance	12.0	1.78	0.152
Scrubbers	3.30	9.56[3]	NA
Boiler Feed	2.52	11.1	0.152
Total	53.1	176	32.9

(1) Includes all chrome pigment product mixes. Values indicated only for those plants that reported complete information.

(2) NA - Not applicable.

(3) Iron blue pigment process.

is given in Figure 16-7. The waste water sources are similar for all pigment products except that at chrome oxide plants, an additional scrubber waste is generated. Table 16-4 gives the waste water flow data summary for several plants. The quantity of waste water and the pollutants vary for the different pigment products since the pollutants are dependent on the raw materials used. The figures in Table 16-4 represent actual plant discharges.

The data sources for the plants used in the determination of unit flow values presented in Table 16-4 are outlined below:

Plant #464. Data based on 308 questionnaire submission. Only chrome pigment production and flows were included.

Plant #214. Data based on 308 questionnaire submission. Chrome pigment and iron blue production and flows were included.

Plant #436. Data based on 308 questionnaire submission. Chrome pigment production and flows were included.

Plant #002. Data based on three days of sampling. Chrome pigment and organic pigment (20%) productions and flows were included.

Plant #894. Data based on three days of sampling. Chrome pigment, iron blue, and organic pigment (15%) productions and flow were included.

As previously discussed, various plants make several chrome pigments sequentially or concurrently. Thus the unit hydraulic load going to the treatment facility will be an average of all the waste loads from the different processes. The raw waste from a complex plant may contain nearly all of the following substances: sodium acetate, sodium chloride, sodium nitrate, sodium sulfate, potassium chloride; lead, iron, and zinc salts; soluble chromium and pigment particulates.

16.3 DESCRIPTION OF PLANTS

16.3.1 Screening

Plant #894 was visited during the screening phase of the program. The samples for this plant were analyzed for all toxic and conventional pollutants.

This plant produces over 100 products including organic pigments such as copper phthalocyanine, and all the wastes are combined and treated together. Treatment consists of chromium

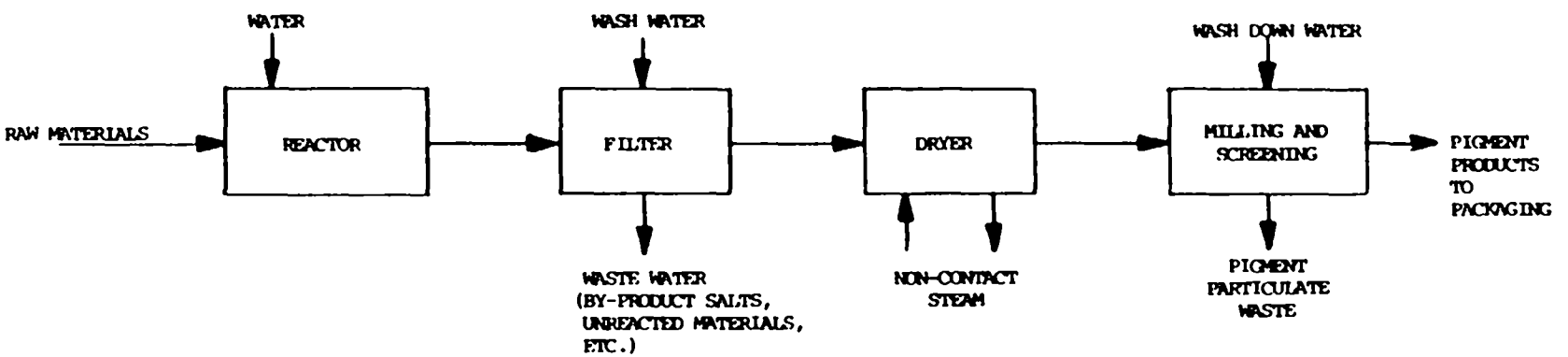

Figure 16-7. General process diagram for production of chrome pigment complexes.

TABLE 16-4. SUMMARY OF WASTE WATER FLOW

SUBCATEGORY: CHROME PIGMENTS

Plant Designation	Waste Water Flow[1] (m^3/kkg)
#464	41.1
#214	32.8
#436	149
#002	78.4[2]
#894	170[2]
Weighted Average Flow	105[3]

(1) Includes waste water from all pigment product mixes.

(2) Includes organic pigments.

(3) Weighted on the basis of production since unit waste flow is directly related to plant production:

$$\text{Weighted average} = \frac{\Sigma\,[(\text{unit flow})(\text{production})]}{\Sigma\,(\text{production})}$$

$$\text{i.e.} = \frac{Q_1(P_1) + Q_2(P_2) + Q_3(P_3) + \ldots + Q_n(P_n)}{P_1 + P_2 + P_3 + \ldots + P_n}$$

Where Q = Unit flow and P = production (which is considered confidential information).

VI reduction, equalization and neutralization, followed by clarification and filtration. Sulfur dioxide is added to reduce the hexavalent chromium to the trivalent state at a low pH prior to hydroxide precipitation. The backwash from the sand filters is recycled to the equalization tank, while the sludge from the clarifiers is passed through filter presses and then hauled to a landfill. The landfill has a bottom consisting of two clay layers sandwiching a gravel layer to allow for collection of leachate drainage. Any water from the sludge is trapped in the gravel layer, and is pumped out and returned to the plant for retreatment.

16.3.2 Verification

Two plants were visited during the verification phase of the program. The first plant, #002, has a rather large product mix. However, one of the larger continuous units can have a major impact on the raw waste characteristics. This unit either produces lead chromate or zinc chromate. During the sampling period, zinc chromate was being produced. All process waste waters are treated continuously. First, the wastes are treated in an SO2 reactor to convert hexavalent chromium to the trivalent state. The pH is then adjusted to 8.5 and then the waste is passed through precoated filters, followed by discharge to the sewer. Figure 16-8 shows the treatment flow diagram and sampling points. Table 16-5 shows the waste flows and pollutant loadings. At sample point #2, half the sample was filtered through a glass fiber filter on a Buechner funnel to simulate the filtration process which was being bypassed at the time of sampling. Analyses were carried out on the filtered and unfiltered samples in order to make possible a comparison of the total and dissolved concentrations.

A review of the sampling data indicates that the waste treatment facility was not functioning properly during the period of sampling at Plant #002. The inadequacies observed in the treated effluent quality have been related to deficiencies in the treatment system design including 1) inadequate equalization and SO2 contact facilities, 2) inadequate clarification which in turn caused blinding of the filter and the subsequent need for filter bypass.

Plant #894 was also visited during the verification phase. The treatment system has been previously discussed. The major problem at this plant is the high unit water use rate. However, this is the only plant found with an adequately designed and operated treatment system in this subcategory.

During the verification phase, only certain pollutant parameters were analyzed. These were pH, cyanide, suspended

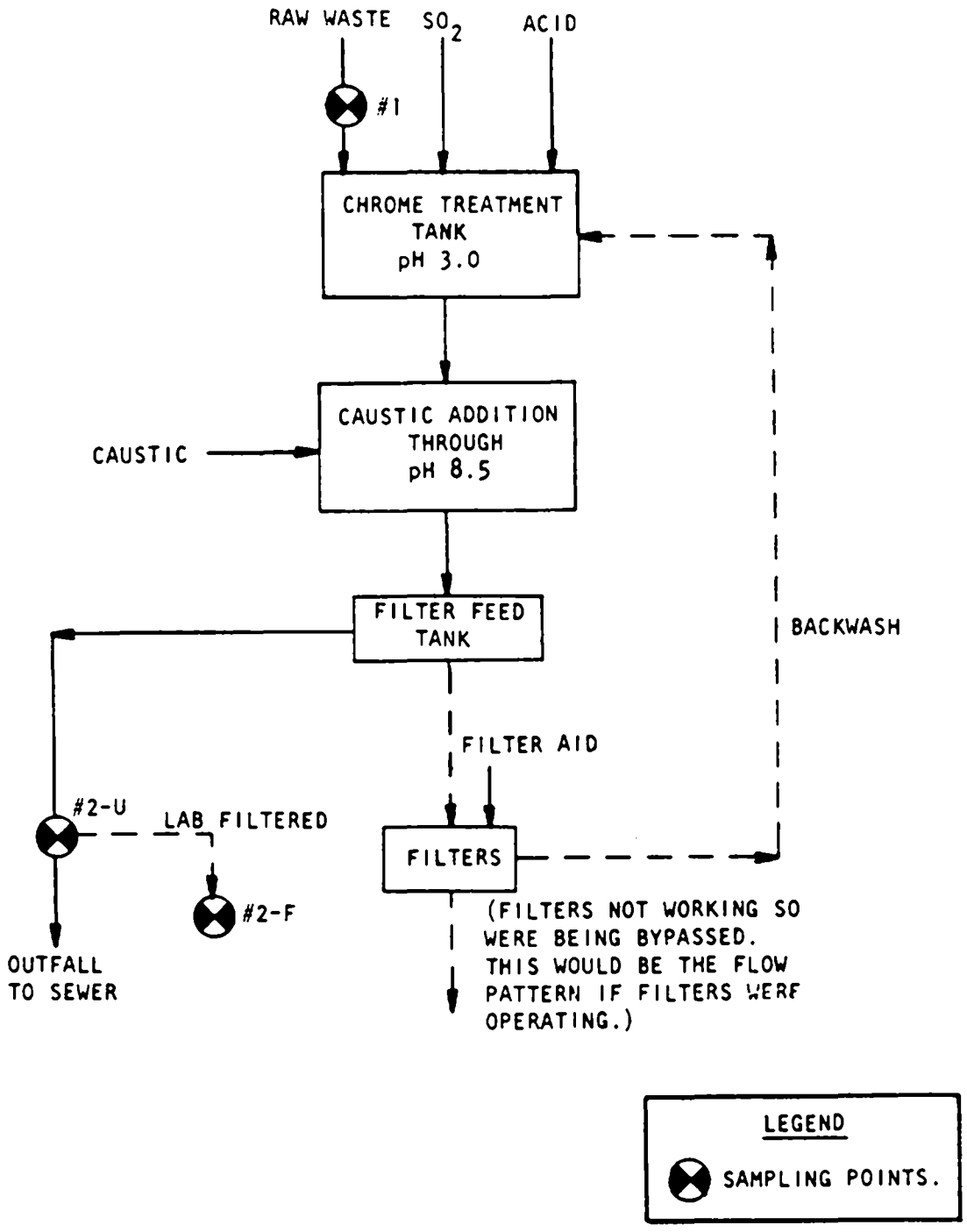

Figure 16-8. General waste water treatment process flow diagram at plant #002 showing the sampling points. (Chrome pigment manufacture.)

TABLE 16-5. FLOW, POLLUTANT CONCENTRATION AND LOAD DATA OF THE SAMPLED WASTE STREAMS FOR PLANT # 002

SUBCATEGORY: CHROME PIGMENTS

Conventional and Nonconventional Pollutants

(mg/l)
(kg/kkg of chrome pigments)

Stream #	Stream Description	Flow (m^3/kkg)	TSS	Fe	Cr(VI)
1	Raw Waste	78.4	700 55	1.6 0.13	300 24
2-U	Unfiltered Treated Waste	78.4	970 76	2.3 0.18	120 9.4
2-F	Filtered Treated Waste	78.4	NA(1)	0.06 0.0047	NA(1)

(1) NA - Not available

solids, and toxic metals. No organics were analyzed during verification.

Figure 16-9 shows the treatment system flow diagram with the sampling points indicated. Table 16-6 gives waste flows and pollutant loadings.

16.3.3 Toxic Pollutant Concentrations

The toxic pollutants found above treatable concentrations in the raw wastes during sampling are given in the table below. Screening data was obtained at Plant #894. Verification was completed at Plants #894 and #002. The only organic pollutant found in the raw waste above the protocol detectable limit (10 µg/l) was naphthalene at 14 µg/l. It should be noted however that some nitrobenzene (56 µg/l) and phthalates at levels up to 220 µg/l were found in the treated effluent and one raw water intake. Since they were not present in the raw wastes, it is presumed they are present as a results of sample contamination; i.e., plasticizer in Tygon Tubing. No organic pollutant sampling was made during verification.

Section 5.1.2 of this report describes the methodology of the screening and verification sampling program. In the chrome pigments industry, 9 days of sampling were conducted at Plants #894 and #002. This involved 5 different sampling points for raw and treated waste streams. The evaluation of toxic metals content of these process related waste streams was based on 195 analytical data points. The screening at Plant #894 for organic pollutants generated another 228 data points. The daily raw waste loads were calculated from the waste stream flow rates measured or estimated at the time of sampling and the measured concentration.

That is,

$$\text{Daily loading} \quad \frac{\text{as kg of pollutant}}{\text{day}} = \frac{(C)(Q)}{1000}$$

Where:

C is the concentration of the pollutant expressed in units of mg/l (Note: kg/m3 = 1000 mg/l), and

Q is the waste stream flow rate expressed in units of m3/day. (m3, a cubic meter, is equal to 264.2 U.S. gallons.)

Similarly, the unit loadings were calculated from the reported chrome pigments production rate, the waste stream flow rate, and the measured pollutant concentration.

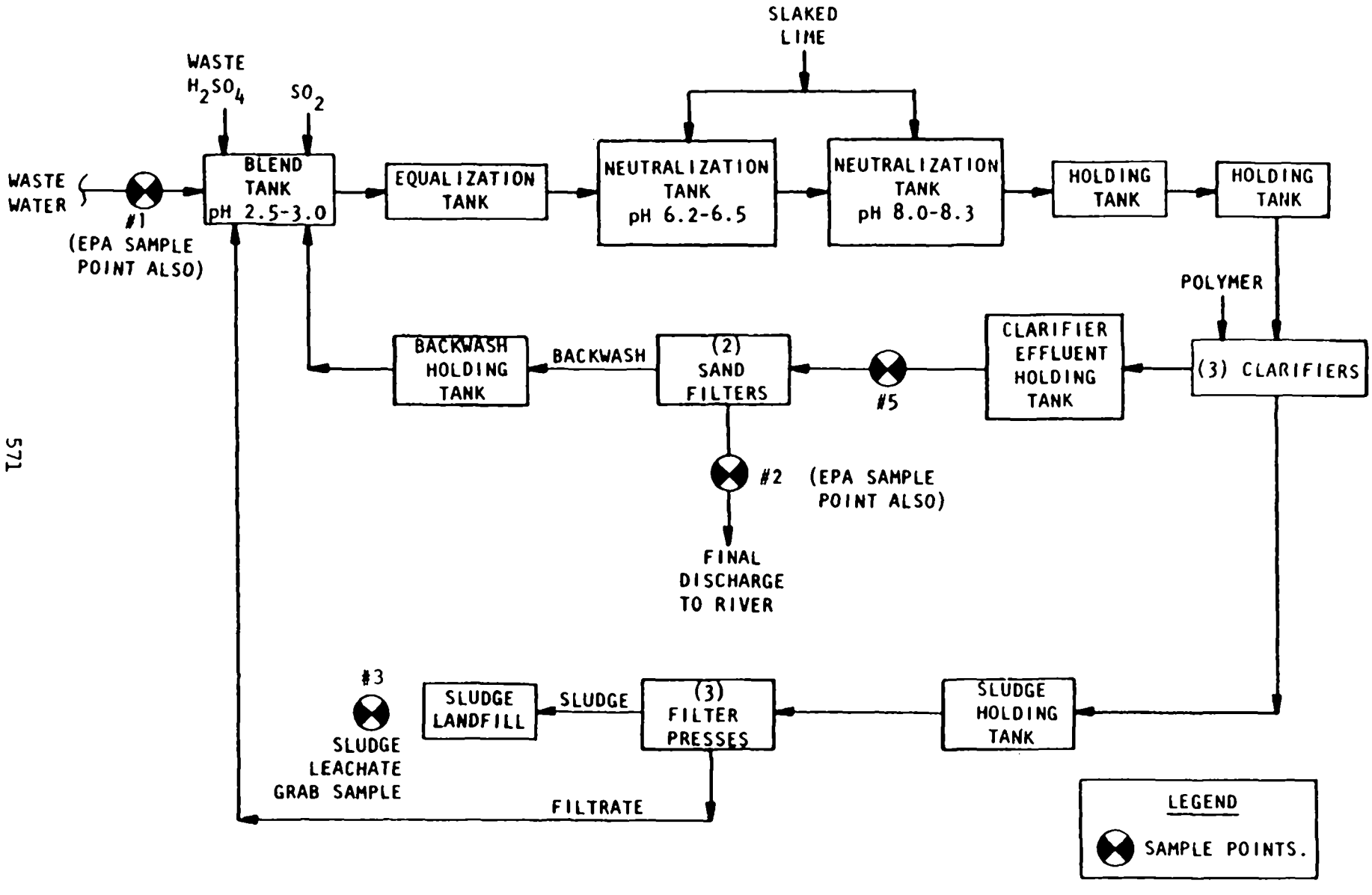

Figure 16-9. General waste water treatment process flow diagram at plant #894 showing the sampling points. (Chrome pigment manufacture.)

TABLE 16-6. FLOW, POLLUTANT, CONCENTRATION AND LOAD DATA FOR THE SAMPLED WASTE STREAMS AT PLANT # 894

SUBCATEGORY: CHROME PIGMENTS

Stream #	Stream Description	Flow (m^3/kkg)	Conventional and Nonconventional Pollutants[3] (mg/l) / (kg/kkg of chrome pigments) TSS	Fe	Cr(VI)
1	Raw Waste	170	770 130	48 8.2	ND[2]
2	Final Discharge	170	3.9 0.66	0.30 0.051	0.023 0.0039
3	Leachate	NA[1]	ND[2]	0.04 NA	ND[2]
5	Sand Filter Influent	170	11 1.9	1.0 0.17	ND[2]

(1) Not Applicable

(2) Not Detected

(3) Verification sampling which involves three 24-hour composite samples.

Unit loading (as kg of pollutant per kkg of chrome pigments) $= \frac{(C)(Q)}{1000(P)}$

Where C and Q are the same as described above, and P is the pigment production rate expressed in units of kkg/day. (kkg is 1000 kg, a metric ton, which is equal to 2205 lbs.)

The minimum, average, and maximum values are based on data from those plants where the particular pollutant was found at concentrations greater than the analytical detection limits and significant in that it could conceivably be treated by an available treatment technology regardless of economic considerations.

In Table 16-7, the toxic pollutant raw waste data are presented as the average daily concentrations and the unit loading found at the individual plants. The overall averages are also shown and were subsequently used in the calculations of the average daily loadings and the average unit loadings shown in Table 16-8 along with the corresponding minimum and maximum values. The toxic pollutant concentrations in the treated effluent are presented in Table 16-9 for the two plants visited during verification sampling.

Based on the total annual production from Table 16-1 of this subcategory and the average waste load generated per unit product from Table 16-8, the estimated total toxic pollutant raw waste loads generated each year for this subcategory are as follows:

Pollutant	Waste Load (kg/year)
Antimony	37,000
Cadmium	7,100
Chromium	1,030,000
Copper	48,000
Lead	250,000
Nickel	1,200
Zinc	310,000
Mercury	230
Cyanide	34,000
Phenol (1)	900
Phenolics (1)	1,500,000

(1) From organic pigment process

TABLE 16-7. TOXIC POLLUTANT RAW WASTE DATA

SUBCATEGORY: CHROME PIGMENTS

Average Daily Pollutant Concentrations and Loadings at Plants Sampled (1)

(mg/l)
(kg/kkg of Chrome Pigments)

Pollutant	Plant Designation			Overall Average
	#894(S) (2)	#894(V) (3)	#002(V)	
Antimony	7.7 1.5	0.76 0.13	1.4 0.11	3.3 0.58
Cadmium	0.79 0.15	0.88 0.15	0.20 0.016	0.62 0.11
Chromium	55 10	82 14	310 24	150 26
Copper	7.5 1.4	4.1 0.70	1.4 0.11	4.3 0.74
Lead	36 6.8	4.8 0.82	54 4.2	32 3.9
Nickel	0.16 0.030	0.017 0.0028	0.32 0.025	0.17 0.019
Zinc	4.1 0.78	4.2 0.71	163 13	57 4.8
Mercury	* *	0.042 0.0072	0.00043 0.000034	0.014 0.0036
Cyanide, CN	3.6 0.68	4.9 0.84	0.71 0.056	3.1 0.53
Cyanide, CN(A)	* *	0.88 0.15	* *	0.88 0.15

(1) The methodology of the sampling program is described in Section 5.1.2, and Section 16.3.3 presents the scope of sampling in the chrome pigments industry.

(2) S - Screening data from one 72-hour composite sample of individual or combined raw waste streams.

(3) V - verification data from three 24-hour composite samples, averaged, from each raw waste sampling point.

* Concentration below detection or no data available.

TABLE 16-8. SUMMARY OF RAW WASTE LOADINGS FOUND IN SCREENING AND VERIFICATION SAMPLING

SUBCATEGORY CHROME PIGMENTS

Pollutant	Loading Range, (kg/day) Minimum	Maximum	Unit Loading, (kg/kkg) Minimum	Average	Maximum	No. of Plants Averaged (2)
Toxic						
Antimony	6.0	98	0.11	0.58	1.5	3
Cadmium	0.87	10	0.016	0.11	0.15	3
Chromium (1)	700	1300	10	16	24	3
Copper	6.1	96	0.11	0.74	1.4	3
Lead	55	459	0.82	3.9	6.8	3
Nickel	0.19	2.0	0.0028	0.019	0.030	3
Zinc	48	714	0.71	4.8	13 13	3
Mercury	0.0019	0.48	0.000034	0.0036	0.0072	2
Cyanide, CN	3.1	56	0.056	0.53	0.84	3
Cyanide, CN(A)	9.8			0.15		1
Phenol	0.93			0.014		1
Phenolics	8.8			0.13		1
Conventional and Nonconventional						
Total Suspended Solids, TSS	3100	8800	55	93	130	2
Fe	7.1	550	0.13	4.2	8.2	2
Hexavalent (1) Chromium Cr^{+6}	1300			24		1

(1) Hexavalent chromium is only one valent form of chromium.

(2) Only those plants where the pollutant was observed at significant levels were included.

TABLE 16-9. TOXIC POLLUTANT TREATED WASTE DATA[1]

SUBCATEGORY: CHROME PIGMENTS

Pollutant (mg/l)	Plant Designation #894	#002	Overall[2] Average Concentration
Antimony	0.30	0.43	0.37
Cadmium	0.0084	0.12	0.064
Chromium	0.33	130	65
Copper	0.035	0.077	0.056
Lead	0.11	1.5	0.81
Nickel	0.021	0.083	0.052
Zinc	0.058	117	59
Mercury	ND[3]	ND	ND
Cyanide, CN	0.065	*	0.065
Cyanide, CN(A)	0.0067	*	0.0067

(1) Verification sampling concentration data, average of three 24-hour composite samples.

(2) Average of two plants shown during verification sampling.

(3) Not detected.

* No data

16.4 POLLUTION ABATEMENT OPTIONS

16.4.1 Toxic Pollutants of Concern

The toxic pollutants found in significant amounts are mostly the heavy metals found in the products as well as the chromium ore and other raw materials. These metals are cadmium, chromium, copper, lead, zinc, antimony and nickel. In addition, some cyanide was found in raw wastes and treated effluents. This cyanide is a result of the manufacture of iron blues and, at one plant site, HCN. However, these guidelines do not apply to iron blues; they will be included in Phase II of the Inorganic Chemicals regulation development. There is significant removal of the cyanides in the chrome pigments treatment, however, probably due to the precipitation of ferrocyanides. The HCN manufacturing process is also regulated by another guideline (see Section 17). Some organic toxic pollutants were found during the screening phase. This was believed to be an anomaly caused by the sampling procedure, since they were also found in the raw intake water, treated effluent, or in the raw waste. In addition, any organics present are probably caused by organic pigments manufacture which is not regulated by this guideline, but will be regulated under the Organic Chemicals Category.

All the waste waters generated in the chrome pigments subcategory contain dissolved chromium and pigment particulates.

Additional pollutants that may be anticipated are given below for each major pigment group.

Chrome Yellow and Chrome Orange

The raw waste waters contain sodium acetate, sodium chloride, sodium nitrate, sodium sulfate, and lead salts.

Chrome Oxide

The aqueous process effluent contains sodium sulfate. If boric acid is used in the preparation of hydrated chromic oxide then the waste water will contain sodium borate and boric acid.

Chrome Yellow and Chrome Orange

Additional pollutants present in the raw waste water from chrome yellow and chrome orange manufacture include sodium acetate, sodium chloride, sodium nitrate, sodium sulfate, and lead salts.

Molybdenum Orange

Process waste effluents from the manufacture of molybdenum orange contain sodium chloride, sodium nitrate, sodium sulfate, chromium hydroxide, lead salts, and silica.

Chrome Green

The raw waste water contains sodium nitrate. If iron blue is manufactured on site as part of the process for chrome green manufacture, the waste water also contains sodium chloride, ammonium sulfate, ferrous sulfate, sulfuric acid and iron blue pigment particulates.

Zinc Yellow

The raw wastes contain hydrochloric acid, sodium chloride, potassium chloride, and soluble zinc salts.

16.4.2 Process Modifications and Technology Transfer Options

The major process problem in the industry is the high rate of water use in some cases. This can be alleviated in a number of ways.

1. Close attention to product quality in conjunction with reduction of product rinses.

2. Reduction in equipment cleaning rinses by the following methodologies:

   a. Recycle of rinse waters.

   b. Minimizing of product changes by the use of better planning and increased number of units.

Equipment cleaning is known to contribute approximately 20 percent of the waste load volume at one plant (#002).

3. Use of parallel treatment for individual product lines. This will allow the reuse of rinse waters and the recovery of products presently lost in waste sludges.

4. The use of ion exchange and/or reverse osmosis on isolated waste waters. This will allow total recovery of product as well as total reuse of waste water. This system is in use on one line at Plant #409.

The above options were reviewed, but except for option 1 were not considered for inclusion in the treatment models due to the engineering required and their capital intensive nature.

16.4.3 Best Management Practices

1. All storm water and surface area runoff from the plant site should be collected and sent to a treatment facility if the water is contaminated from process wastes. This contamination can be minimized by storage of chemicals indoors, proper air pollution control, and elimination of all spills.

2. If the solids from the treatment plant are disposed of on-site, provision should be made to control leachates and permeates. It is possible to monitor the metal concentrations and when concentrations approach predetermined limits, the leachate can be pumped back to the treatment system for further treatment.

16.4.4 Prevailing Control and Treatment Practices

A description of the individual treatment facilities for those plants visited is given in 16.3.1 and 16.3.2. In addition, the following information was obtained for the remaining plants.

Plant #214 manufactures pigments and other chemicals. The plant does not have a waste water treatment facility. After pH adjustment, waste is discharged to a POTW. Part of the process waste is recycled.

Plant #593 manufactures organic and inorganic chemicals. Existing combined waste water treatment plant consists of lagoon, aeration, clarifiers, and filters. The sludge disposal is on-site landfill.

Plant #464 manufactures both organic and inorganic pigments. After pH adjustment, waste water is discharged to POTW.

Plant #101 manufactures inorganic ceramic pigments, color and porcelain. The existing combined waste water facility consists of a series of settling basins. Sludge disposal is to off-site landfill. After pH adjustment, the final discharge is to a POTW.

Plant #502 manufactures both organic and inorganic pigments, of which chrome pigments are a small part. Treatment consists of pH adjustment prior to discharge.

Plant #436 manufactures several chemicals in addition to chrome pigments. The treatment system consists of neutralization with caustic and clarification in settling lagoons prior to discharge. Sludge is contract-hauled approximately once every three years.

Plant #409 manufactures specialty chemicals and inorganic pigments. The existing waste water treatment facility consists of SO2 reduction, clarification, filters and pH adjustment. Sludge disposal is to an off-site location.

Plant #997 manufactures chromic oxide and sulfuric acid. Production data is not available. The existing waste water treatment facility consists of pH adjustment, SO2 reduction and lagoons.

Plant #962 manufactures inorganic pigments (chrome yellow). Existing waste treatment plant consists of flocculation, clarification and filters. After pH adjustment, the effluent is discharged to a POTW. Sludge is recycled to process.

Plant #200 manufactures and imports small quantities of chrome pigments. Treatment is unknown.

In summary, a review of the existing treatment system descriptions indicates that the prevailing treatment practices appear insufficient except for the system at Plant #894. The major problems besides total lack of treatment is lack of sufficient residence time, lack of critical treatment units, and failure to collect all waste streams. As previously stated, only Plant #894 has a properly designed and operated treatment system. This system is basically the same as the Level 1 treatment system shown in Figure 16-10.

16.4.5 Advanced Treatment Technologies

The treatment technologies in use in the industry consist of segregation, equalization, SO2 reduction, alkaline neutralization, clarification, and filtration. In addition, the following technolgies were reviewed for model plant development: sulfide precipitation, ion exchange, reverse osmosis, and the xanthate process.

16.5 SELECTION OF APPROPRIATE TECHNOLOGY AND EQUIPMENT

16.5.1 Technologies for Different Treatment Levels

A careful review of the end-of-pipe treatment methods available to industry was made. As a result, the following two methodologies were chosen as treatment levels. The following considerations were made in establishing the models:

1. Effective reduction of pollutants.

2. Established treatment practices in the industry.

3. The cost of technology.

4. The adaptability of the model to different situations.

Level 1 (BPT/BAT)

Consists of equalization, SO2 reduction, alkaline precipitation, clarification, and filtration.

Level 2

For better removal of the trace metals, sulfide precipitation is incorporated ahead of the BPT dual media filter.

The flow diagrams for these two levels are shown in Figures 16-10 and 16-11.

16.5.2 Equipment for Different Treatment Levels

Equipment Functions

In both levels, the incoming wastes are acidified in a holding tank and then treated with sulfur dioxide solution in a reactor to convert hexavalent chromium to trivalent chromium. Caustic soda is then added as a precipitant and a polymeric coagulant is added to help settle the heavy metal hydroxides in a clarifier. The settled effluent is then filtered in a dual media filter and discharged after pH adjustment to the range 6 to 9. In Level 2, ferrous sulfide is added ahead of the dual media filter for more effective precipitation of all the residual heavy metals, including antimony. As in Level 1, the filter effluent is adjusted to a pH between 6 to 9 before discharge.

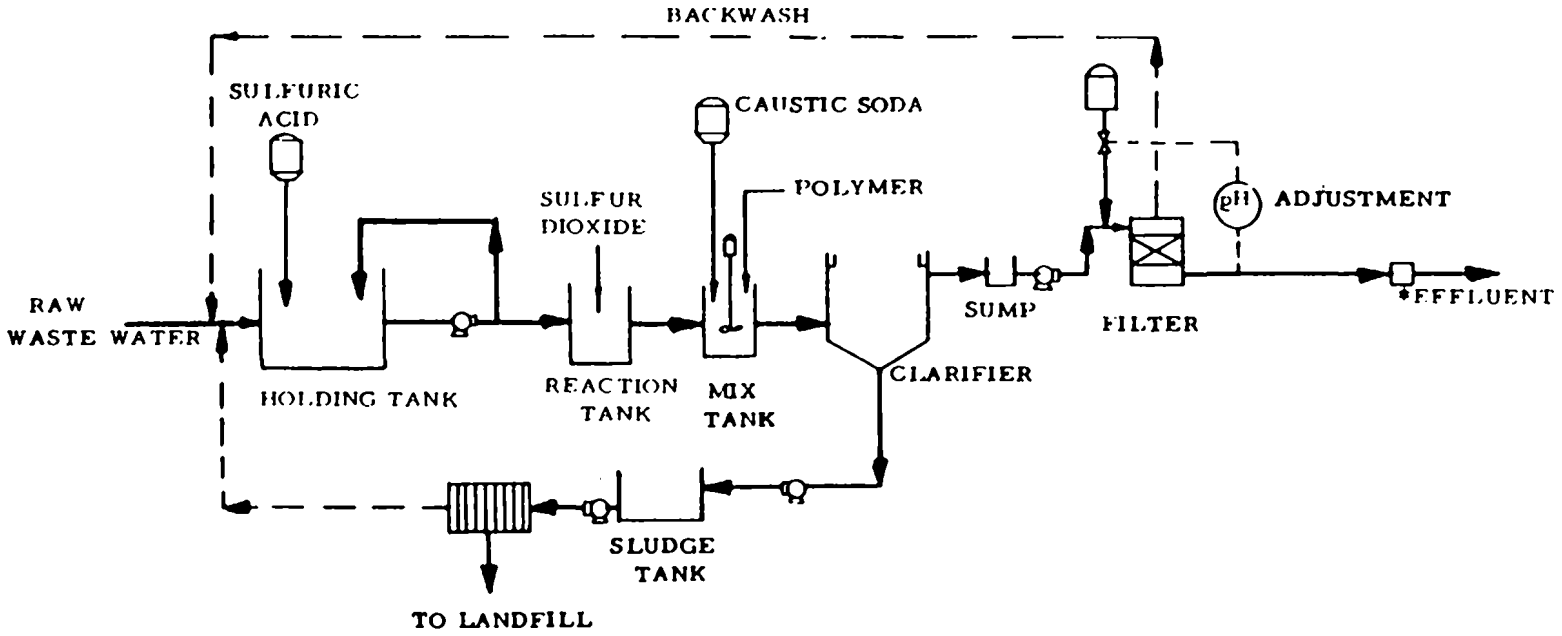

*Includes flow monitoring, pH monitoring and sampler.

Figure 16-10. Level 1 waste water treatment for chrome pigments.

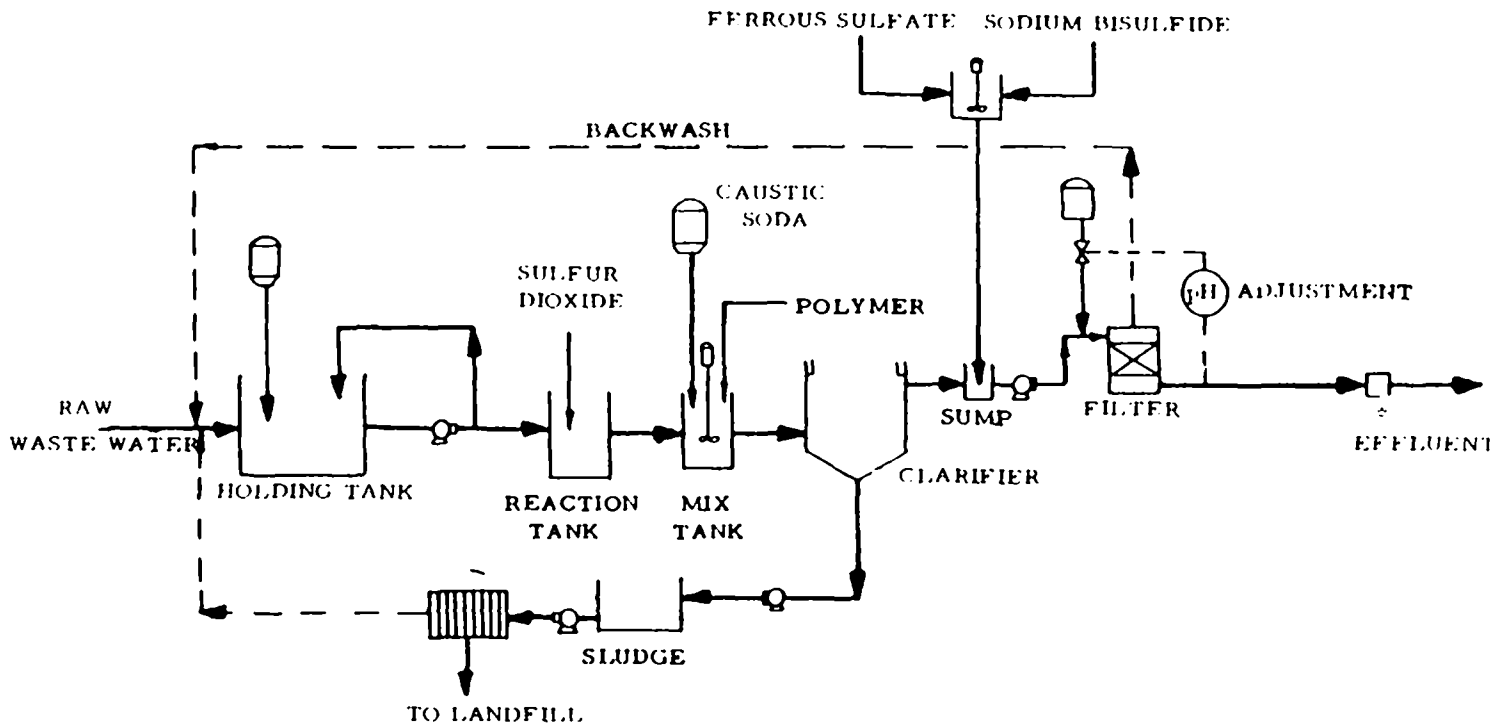

*Includes flow monitoring, pH monitoring and sampler.

Figure 16-11. Level 2 waste water treatment for chrome pigments.

Chemicals and Handling

Sulfuric acid and caustic soda solutions are common industrial chemicals which are readily handled with conventional liquid feeding equipment. Sulfur dioxide is received as a compressed gas which is dissolved in water by a modified gas chlorinator and fed to the reactor to maintain consistent reducing conditions. Polymer is fed by a standard package of holding tank, mixer, and feeder. With normal precautions there are no unusual hazards in handling chemicals for treatment of chrome pigment wastes.

Separation and Disposal of Solids

Solids from the clarifier, including recirculated filter backwash solids, are dewatered in a filter press and hauled to a chemical landfill. Sludge filtrate is returned to the influent holding tank.

Monitoring Requirements

Internal process monitoring consists of maintaining proper pH levels in the holding tank and final effluent, using conventional field equipment. A reducing environment is maintained in the reactor, using an oxidation-reduction potential instrument and/or analysis for excess SO2. Periodic effluent analyses for chromium and heavy metals should be made on composite samples by atomic absorption methods, for official reporting purposes. Sulfide monitoring is generally unnecessary because dissolved sulfides should not exist in the presence of excess ferrous iron and oxygen.

16.6 TREATMENT COST ESTIMATES

16.6.1 General Discussion

To prepare cost estimates, a model plant concept was developed and plant criteria developed for both Level 1 and Level 2.

Waste Water Flow

The data for five plants with usable flow data is summarized in Table 16-4. This information was used on a production weighted basis to determine the average flow in the industry. This average was computed to be 105 m3/kkg (25,200 gal/ton). This value was used for sizing the model plants.

Chromium Pigment Production

Production in the chrome pigment subcategory ranges from a low of 100 kkg/year to a high of approximately 18,000 kkg/year. The mean production is approximately 7200 kkg/year. For the purposes of estimating treatment costs, four production levels were selected as model plants. These are 1500 kkg/year, 4000 kkg/year, 6000 kkg/year, and 18,000 kkg/year. These cover the entire range of production rates. Most plants produce many chrome pigment products on a continuous basis so the operational mode selected was continuous and assumed to run 350 days per year. Chrome pigments are usually produced in integrated facilities with the necessary flexibility to shift from one product or combination of products to another. The model plant was selected to reflect this type of complexity.

Waste Water Pollution Load

For the model plants, the loads are based on verification plant data. This data indicated an average loading of 16 kg/kkg chromates as chromium (Table 16-8). Total toxic metals loadings ranged from 12 kg/kkg to 47 kg/kkg. Total suspended solid loadings ranges from 55 kg/kkg to 130 kg/kkg (Table 16-8). The overall solid waste generation is expected to be 85 kg/kkg to 150 kg/kkg (dry solids). For the purpose of determining solid waste generation, a value of 105 kg/kkg (dry solids) was selected.

The costs shown at each level of treatment correspond to the model plant BPT system (Level 1) and an alternative system incorporating sulfide precipitation into the BPT model in order to meet more stringent toxic pollutant requirements.

The estimated costs for the four models is given in Tables 16-10, 16-11, 16-12, and 16-13. For these models, both hydraulic and pollution loads per unit of production were held constant over the entire range of production. Annual treatment costs as a function of production is shown graphically in Figure 16-12, while unit treatment costs as a function of production is given in Figure 16-13.

In order to determine the accuracy of the treatment model, an attempt was made to compare the model costs against actual industry costs. Cost data were received on two plants, one with treatment installed and one in the design stage. No attempt was made to compare costs item by item since these specific costs may differ for the following reasons:

1. Variations in land costs.

TABLE 16-10. MODEL PLANT TREATMENT COSTS

Subcategory CHROME PIGMENTS

Production	1,500 metric tons per year[1]	(1,653 tons per year)[1]
	4 metric tons per day	(4 tons per day)
Waste water flow	454 cubic meters per day.	

	LEVEL OF TREATMENT[2]	
	FIRST	SECOND
A. INVESTMENT COST		
Construction	$36,800	$1,000
Equipment in place, including piping, fittings, electrical work and controls.....	280,650	10,000
Monitoring equipment in place.....	9,000	
Engineering design and inspection.....	65,290	2,200
Incidentals, overhead, fees, contingencies...	65,290	2,200
Land.....	6,000	
TOTAL INVESTMENT COST	$463,030	$15,400
B. OPERATION AND MAINTENANCE COST		
Labor and supervision.	$112,000	$14,000
Energy.....	7,350	300
Chemicals.....	53,000	2,200
Maintenance.....	45,703	1,540
Taxes and insurance...	13,890	462
Residual waste disposal.....	5,000	
Monitoring, analysis and reporting.....	15,000	7,500
TOTAL OPERATION AND MAINTENANCE COST	$251,943	$26,002
C. AMORTIZATION OF INVESTMENT COST	$74,358	$2,505
TOTAL ANNUAL COST	$326,301	$28,507

(1) 350 days per year
(2) First level represents the base cost of treatment system. Other levels represent the incremental cost above base cost.

TABLE 16-11. MODEL PLANT TREATMENT COSTS

Subcategory CHROME PIGMENTS

Production 4,000 metric tons per year[1] (4,410 tons per year)[1]
11 metric tons per day (12 tons per day)
Waste water flow 1219 cubic meters per day.

	LEVEL OF TREATMENT[2]	
	FIRST	SECOND
A. INVESTMENT COST		
Construction	$53,900	$2,000
Equipment in place, including piping, fittings, electrical work and controls.....	510,000	15,000
Monitoring equipment in place.....	9,000	
Engineering design and inspection.....	114,580	3,400
Incidentals, overhead, fees, contingencies...	114,580	3,400
Land.....	12,000	
TOTAL INVESTMENT COST	$814,060	$23,800
B. OPERATION AND MAINTENANCE COST		
Labor and supervision.	$112,000	$14,000
Energy.....	15,000	300
Chemicals.....	141,300	5,900
Maintenance.....	80,206	2,380
Taxes and insurance...	24,421	714
Residual waste disposal.....	15,000	
Monitoring, analysis and reporting.....	15,000	7,500
TOTAL OPERATION AND MAINTENANCE COST	$402,927	$30,794
C. AMORTIZATION OF INVESTMENT COST	$130,495	$3,872
TOTAL ANNUAL COST	$533,422	$34,666

(1) 350 days per year
(2) First level represents the base cost of treatment system. Other levels represent the incremental cost above base cost.

TABLE 16-12. MODEL PLANT TREATMENT COSTS

Subcategory CHROME PIGMENTS

Production	6,000 metric tons per year[1]	(6,615 tons per year)[1]
	17 metric tons per day	(18 tons per day)
Waste water flow	1820 cubic meters per day.	

	LEVEL OF TREATMENT[2]	
	FIRST	SECOND
A. INVESTMENT COST		
Construction	$71,400	$5,000
Equipment in place, including piping, fittings, electrical work and controls.....	667,000	20,000
Monitoring equipment in place.....	9,000	
Engineering design and inspection.....	149,480	5,000
Incidentals, overhead, fees, contingencies...	149,480	5,000
Land.....	12,000	
TOTAL INVESTMENT COST	$1,058,360	$35,000
B. OPERATION AND MAINTENANCE COST		
Labor and supervision.	$112,000	$14,000
Energy.....	20,200	300
Chemicals.....	211,500	8,800
Maintenance.....	104,636	3,500
Taxes and insurance...	31,750	1,050
Residual waste disposal.....	20,000	
Monitoring, analysis and reporting.....	15,000	7,500
TOTAL OPERATION AND MAINTENANCE COST	$515,086	$35,150
C. AMORTIZATION OF INVESTMENT COST	$170,242	$5,694
TOTAL ANNUAL COST	$685,328	$40,844

(1) 350 days per year.

(2) First level represents the base cost of treatment system. Other levels represent the incremental cost above base cost.

TABLE 16-13. MODEL PLANT TREATMENT COSTS

Subcategory CHROME PIGMENTS

Production 18,000 metric tons per year[1] (19,845 tons per year)[1]
51 metric tons per day (56 tons per day)
Waste water flow 5460 cubic meters per day.

	LEVEL OF TREATMENT [2]	
	FIRST	SECOND
A. INVESTMENT COST		
Construction	$205,500	$4,000
Equipment in place, including piping, fittings, electrical work and controls.....	1,495,500	60,000
Monitoring equipment in place.....	9,000	
Engineering design and inspection.....	342,000	12,800
Incidentals, overhead, fees, contingencies...	342,000	12,800
Land.....	18,000	
TOTAL INVESTMENT COST	$2,412,000	$89,600
B. OPERATION AND MAINTENANCE COST		
Labor and supervision.	$112,000	$14,000
Energy.....	28,000	600
Chemicals.....	635,000	26,400
Maintenance.....	239,400	8,960
Taxes and insurance...	72,360	2,688
Residual waste disposal.....	60,000	
Monitoring, analysis and reporting.....	15,000	7,500
TOTAL OPERATION AND MAINTENANCE COST	$1,161,760	$60,148
C. AMORTIZATION OF INVESTMENT COST	$389,503	$14,577
TOTAL ANNUAL COST	$1,551,263	$74,725

(1) 350 days per year
(2) First level represents the base cost of treatment system. Other levels represent the incremental cost above base cost.

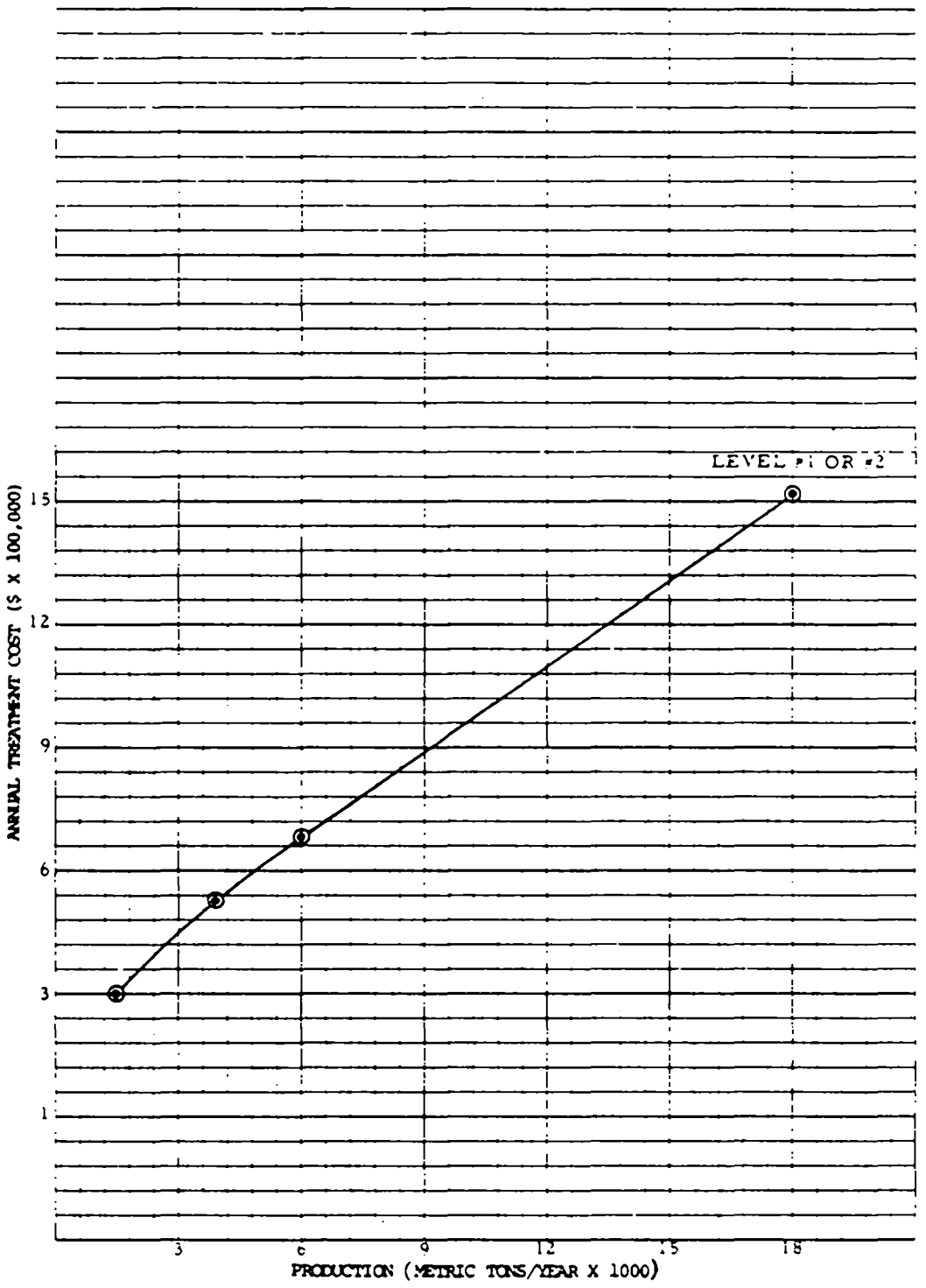

Figure 16-12. Annual treatment cost vs. production for the chrome pigments subcategory.

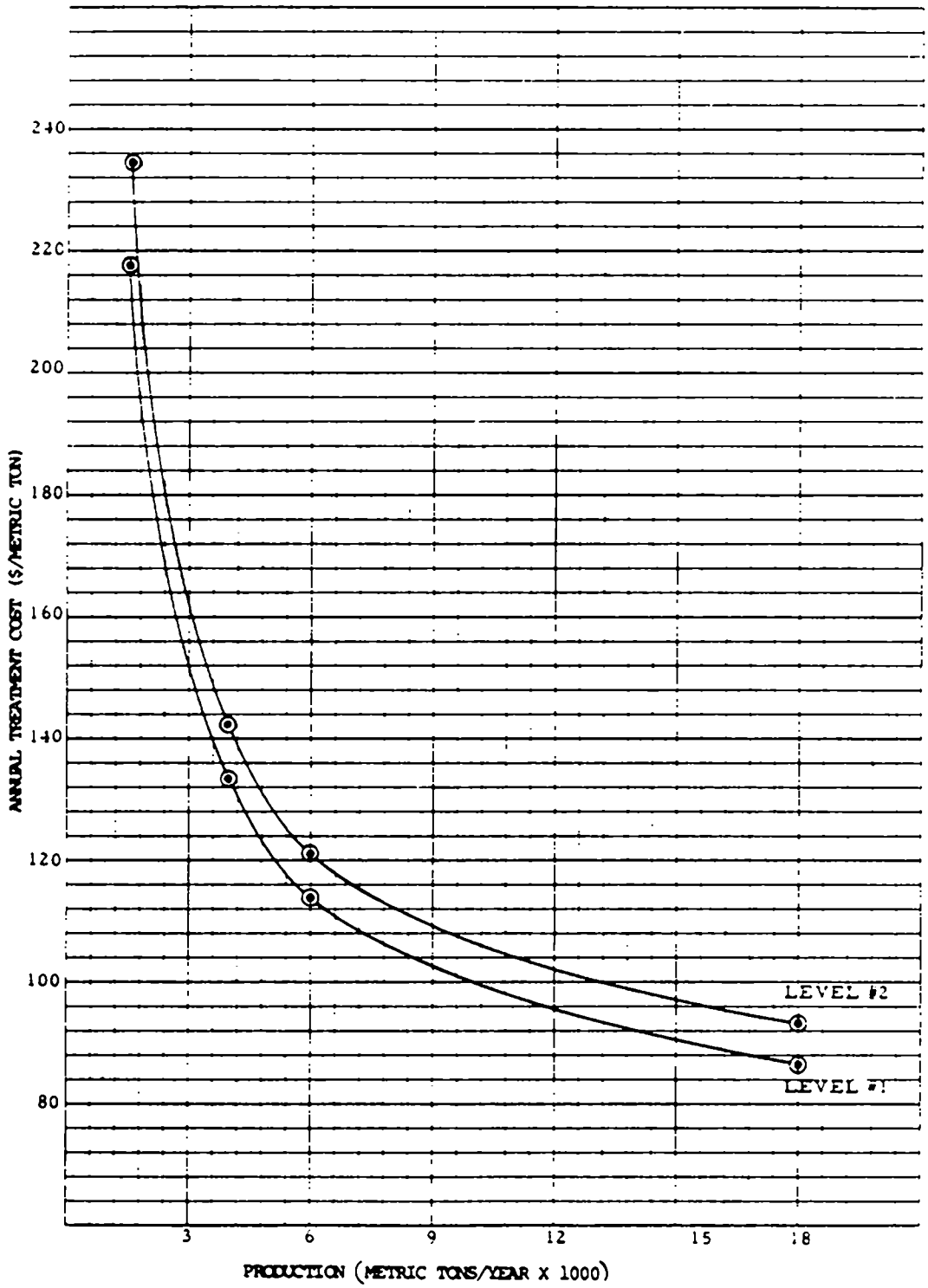

Figure 16-13. Annual unit treatment cost vs. production for the chrome pigments subcategory.

2. Variations in hydraulic loading.

3. Varying costs of solid waste disposal.

The following overall results were obtained:

	Annual Costs ($/kkg)
Model Plant	86.18
Plant #002	85.38
Plant #894	91.03

The above data indicate a very good correlation between the model plant and site specific engineering estimates.

Table 16-14 presents a summary of the unit cost distribution beween amortization, operation, and maintenance cost components at various production and levels of treatment.

For the model plant, the primary sources of waste water are from product washing, slurrying of reaction products, scrubbing of reactor vent gases, and washing of equipment due to product changes.

16.6.2 Model Plant Costs

The major costs for the Level 1 model plant are equipment, labor, and chemical costs. Engineering design and equipment maintenance are also fairly large. The majority of the annual cost is tied up in operation and maintenance. This cost can approach 50% of the total capital cost.

The second level of treatment has a much lower incremental cost than the first. However, the cost breakdown is quite similar to Level 1.

The cost of transporting and disposal of 30% solids sludge is included in the cost estimates.

16.7 BASIS FOR REGULATIONS

16.7.1 Evaluation of BPT Treatment Practices

A number of factors are anticipated to contribute to a wide variation in the effluent quality at chrome pigment plant treatment facilities. Consideration of these variations is included in establishing limitations in that the performance of

TABLE 16-14. MODEL PLANT TREATMENT COSTS

Subcategory: CHROME PIGMENTS

COST ITEM	PRODUCTION (kkg/yr)	FLOW (m3/day)	Annual Treatment Costs ($/kkg) LEVEL OF TREATMENT FIRST	SECOND	THIRD	FOURTH
Annual Operation and Maintenance	1,500	454	167.96	17.33	Not Applicable	
	4,000	1,219	100.73	7.70		
	6,000	1,820	85.85	5.86		
	18,000	5,460	64.54	3.34		
Annual Amortization	1,500	454	49.57	1.67		
	4,000	1,219	32.62	0.97		
	6,000	1,820	28.37	0.95		
	18,000	5,460	21.64	0.81		
Total Cost	1,500	454	217.53	19.00		
	4,000	1,219	133.36	8.67		
	6,000	1,820	114.22	6.81		
	18,000	5,460	86.18	4.15		

the plant on which limitations are based is a large complex plant that encounters all of these factors. These include the following:

Product Changes

Changes in products require that equipment be thoroughly cleaned prior to reuse. Therefore, frequent product changes will result in higher waste flows.

Product Application

The final disposition of the product will affect the quality required. The higher the quality, the more water required for rinsing.

Air Pollution Control

Equipment will be required in many cases for control of the environment as well as off-site air compliance. Scrubbers will add some waste flow to the treatment system. This flow, however, is generally small.

Other Related Products

Many plants manufacture other types of pigments including iron blues and organic pigments. These products generate significant quantities of waste water which tend to dilute chrome pigment wastes. However, these waste waters were included in the computation of the unit waste flow. Therefore, the use of parallel treatment for existing facilities producing other pigments is not required at this time as long as chromium pigment production is the majority of the overall production. The following guidelines should be used in applying these regulations:

1. When determining the effluent loadings, the total production of a facility will be used as long as the chrome pigment production is in the majority.

2. When the chromium production is the minority of the overall production, the total production should be used for computing the effluent limits under the following conditions: the remaining production (other than chrome pigments) generates a waste water containing significant amounts of toxic metals which will be removed by a chrome pigment treatment system.

3. For those facilities (existing sources) where chromium production is in the minority and the wastes from other sources do not contain metals above accepted levels of treatability,

segregation and parallel treatment of chromium pigment wastes are recommended. However, the permitting authority or POTW must consider the following balancing factors:

a. The economic impact on the facility balanced against

b. The environmental benefits of parallel treatment.

In addition to the above factors, the design and operation of the treatment facilities affect effluent quality. Important factors are equalization, SO2 contact time and pH depression, SO2 dose, proper neutralization, and adequate solids removal.

Table 16-15 is a summary of verification sampling and long-term effluent monitoring data at Plant #894 for the major pollutants of concern. Plant #002 sampling results are excluded from the subcategory performance evaluation, since the treatment system was not functioning properly as previously discussed. The long-term monitoring data in Table 16-15 is for the maximum 30-day average long-term monitoring results. Sufficient data was not available to estimate long-term daily maximum values.

Plant #894 is the only known plant with Level 1 treatment system installed and operating. Table A-11a sets forth means, variability factors, and the 95 percent monthly average. Maximum daily performance (99%) was not computed since the discrete sampling data was not available at the time of the evaluation. The performance evaluation in Table 16-5 is utilized for the development of proposed regulations for TSS and applicable toxic metals.

As previously stated, only one plant of the existing twelve is known to have a Level 1 treatment system installed. This plant represents approximately 30-35 percent of total production. Most other plants have some type of treatment installed, but none of these appear to be adequate. This technology is expected to remove 3,200,000 pounds per year of toxic metals.

The Agency is conducting additional treatability studies for the subcategory, the data from which will be available before promulgation of a final regulation.

16.7.2 Basis for Proposed BPT Effluent Limitations

Technology Basis

For BPT, the Agency is proposing limitations based on equalization, reduction of hexavalent chromium followed by alkaline precipitation, and dual media filtration. Reduction of

TABLE 16-15. SUMMARY OF LONG TERM AND VERIFICATION EFFLUENT SAMPLING RESULTS AT PLANT #894

SUBCATEGORY: CHROME PIGMENTS				
Pollutant	Verification Sampling[3] (mg/l)	(kg/kkg)	Achievable Performance Max 30-day Avg (mg/l)	(kg/kkg)
Total Suspended Solids, TSS	3.9	0.66	23	3.9
Iron	0.30	0.051	NA[2]	NA
Antimony	0.30	0.051	NA	NA
Arsenic	ND[1]	ND	0.16	0.027
Cadmium	0.0084	0.0014	0.12	0.020
Chromium	0.33	0.056	0.73	0.12
Copper	0.035	0.0060	0.25	0.42
Lead	0.11	0.019	0.87	0.15
Mercury	ND	ND	0.0016	0.00027
Nickel	0.021	0.0036	NA	NA
Zinc	0.058	0.0099	0.074	0.013
Cyanide (CN-A)	0.065	0.011	0.068	0.012
Cyanide (Total)	0.0067	0.0011	0.31	0.053
Chromium (VI)	0.023	0.0039	0.30	0.051

(1) ND, Not Detected.

(2) NA, Not Available.

(3) From Table 16-9.

(4) From Table A-11a, "Historical Effluent Monitoring Data Summary."

flow by the methods given in 16.4.2 was considered but not used since their application is site specific. However, they are quite viable options in most cases and could result in substantial treatment cost savings.

Flow Basis

The basis of flow for the proposed BPT limitations is estimated from data provided in the 308 questionnaires and plant visits during sampling. Table 16-4 presents the plant flow data used for the purpose of regulation. A weighted average flow was determined based on plant production. In other words, plants producing a greater quantity of chrome pigment product have a waste flow which has a greater influence on the average flow calculation. This approach for the determination of the average flow is substantiated by the unit waste flow which is related to the plant production rate.

Since plants in the chrome pigments subcategory do not segregate waste waters from the various pigment processes for treatment, the basis of flow for the purpose of regulation includes all process related waste water combined. The flow basis is 105 m3/kkg from Table 16-4. This flow does not include any recycle or reuse of waste waters other than some incidental recycle being done at five plants included in the data base.

Selection Basis for Pollutants to be Regulated

The selection of pollutants for which specific numerical effluent limitations are proposed was based on an evaluation of raw waste data from the screening and verification sampling program. Pollutant data from the plant sampled during screening was used to determine the need for verification sampling. Verification sampling at Plants #002 and #894 provided additional pollutant raw waste concentration data needed to assess the magnitude of the pollution potential.

Results of the screening and verification sampling are tabulated in Section 16.3.3 for the raw process waste streams. The pollutant concentration listed under verification is the highest value observed during sampling at the two plants visited.

Toxic pollutants are listed based on their presence, during sampling, at significant concentration levels. Pollutants from this list were considered as candidates for regulation if their concentrations appeared to equal or exceed in at least one instance the lowest level estimated as treatable using any available technology appropriate for their removal, ignoring economic considerations.

The relative significance of the candidate pollutants was estimated based on the total annual raw waste load for each pollutant which appears in a Table in Section 16.3.3. The total annual load is based on the average concentration observed during screening and verification which is tabulated in Table 16-8 in addition to the estimated annual production of 64,500 kkg of product for the industry.

Specific numerical effluent loading limitations were proposed only for those candidate pollutants which appeared at average concentration levels (Table 16-7) considered to be treatable for at least one plant visited during sampling.

On the basis of concentration and total annual raw waste loads determined during sampling, chromium, zinc, lead, copper, antimony, cadmium, nickel and mercury have been identified in the raw waste stream and are also candidates for regulation. Organic pollutants and cyanide are not included, since they are considered products of iron blue, organic pigments, or HCN production as discussed under 16.3.1. In addition, these parameters will be covered by future regulations in other subcategories.

In view of the treatment technology currently practiced and the related nature of the candidate pollutants, control of the more significant toxic pollutants should ensure adequate control of those metals which may occasionally appear at treatable levels.

Consideration of direct hexavalent chromium limitations has been dropped due to problems with the analytical procedure. Studies have shown significant inaccuracies in the measurement of hexavalent chromium in chrome pigment wastes. It does not appear that this problem will be overcome in the near future. However, hexavalent chromium will be adequately controlled by the total chromium limit. This is because almost all the chromium must be converted to the trivalent state in order to be removed from solution by alkaline precipitation. Limitations on hexavalent to some degree may be considered redundant.

Hexavalent chromium should be excluded from consideration in the proposed regulations. The complexity and subsequent accuracy of the analysis may cause misleading conclusions if used as an effluent monitoring parameter. SO2 reduction under acidic conditions should convert hexavalent chromium to its trivalent form which can be conveniently verified by analysis of total chromium in the treated effluent. Chromium can not be removed by alkaline precipitation unless it is in the trivalent

form. Therefore, if the SO2 reduction step fails to reduce the hexavalent chromium it will become apparent in the effluent total chromium concentration.

Basis of Pollutant Limitations

Conventional and Nonconventional Parameters -

A. pH: The treated effluent is to be controlled within the range of 6.0 to 9.0. This limitation is based on the data presented in Appendix B of this report and the JRB Study (52).

B. Total Suspended Solids (TSS): Review of the long-term monitoring and verification sampling data in Table 16-15 indicates a maximum 30-day average TSS discharge of 3.9 kg/kkg for the purpose of the proposed limitation determination. The 30-day average concentration basis is then determined as follows:

$$\left(\frac{3.9\ \text{kg/kkg}}{105\ \text{m3/kkg}}\right)\left(\frac{1000\ \text{mg/l}}{\text{kg/m3}}\right) = 37\ \text{mg/l}$$

The 24-hour maximum loading limitation is determined by the following relationship:

$$\left(\begin{array}{c}\text{30-day average}\\ \text{loading or concentration}\end{array}\right)(\text{VFR}) = \begin{array}{l}\text{24-hour maximum}\\ \text{loading or}\\ \text{concentration}\end{array}$$

The variability factor ratio (VFR) is estimated from the Titanium Dioxide Sulfate Process Subcategory based on 30-day average and daily variability factors for zinc. The long-term monitoring data on zinc showed daily average concentrations ranging from 0.010 to 1.14 mg/l during a period of more than two years (Tables A-9a-1 and A-9c-1 in Appendix A). This range of values for zinc nearly spans the observed range of toxic metal concentrations found in the effluent from Chrome Pigments Plant #894 (Table 16-15). The VFR of 2.4 for zinc in the TiO2 Sulfate Process reflects the overall metal removal performance of alkaline precipitation followed by settling and discharge without filtration. Therefore, this VFR is applied to the Chrome Pigments industry as a conservative estimate of the performance of a similar treatment technology which does include a final filtration step. Therefore, the 24-hour maximum limitation becomes,

$$(3.9\ \text{kg/kkg})(2.4) = 9.4\ \text{kg/kkg}$$

C. Other pollutants: The concentration basis for iron is also presented in Table 16-15. This concentration is intended to serve as guidance in cases where iron is found to be of serious concern.

Toxic Pollutants

The effluent limitations proposed for the selected toxic pollutant control parameters are derived from three sources of information including 1) screening and verification sampling data, 2) literature based treatability estimates (Section 8.1), and 3) a limited amount of long-term monitoring data at Plant #894.

The sampling results represent plant performance observed during three days of sampling. The sampling data was used primarily to select the pollutants of concern, and in the case of antimony and nickel the sampling results were used to estimate the 30-day average concentration in view of the lack of long-term monitoring data for these two pollutants.

The sampling data for Plant #894 appears to demonstrate that in some cases the effluent quality for metal pollutants are considerably better for BPT treatment than indicated by literature treatability data in Section 8.1. This high degree of incidental removal supports the contention that by applying effluent limitations just to the dominant metal pollutant(s), an effective control of the other metals may also be assured.

The VFR used to determine the proposed 24-hour maximum limitations is based on long-term data for zinc in the Titanium Dioxide Subcategory.

A. Chromium: The raw waste concentration for chromium was observed as high as 370 mg/l and averaged 150 mg/l during sampling (Table 16-7). The long-term monitoring results indicate a maximum 30-day average discharge of 0.12 kg/kkg which is the basis of the proposed limitations. The concentration basis then becomes,

$$\left(\frac{0.12\ \text{kg/kkg}}{105\ \text{m3/kkg}}\right)\left(\frac{1000\ \text{mg/l}}{\text{kg/m3}}\right) = 1.1\ \text{mg/l}$$

The 24-hour maximum is determined as follows,

$$(0.12\ \text{kg/kkg})\ (2.4) = 0.29\ \text{kg/kkg}$$

where the VFR is set equal to 1.9 based on data from the TiO2 subcategory.

B. Zinc: Proposed zinc limitations were set equal to chromium. Tables 16-7 and 16-9 indicate that the removals of zinc and chromium are similar at Plant #002 where zinc is found at very high raw waste concentrations.

C. Lead: The raw waste concentration for lead was observed as high as 69 mg/l and averaged 32 mg/l during sampling. The long-term monitoring results indicate a maximum 30-day average discharge of 0.15 kg/kkg which is used as the 30-day average limitation. The concentration basis then becomes,

$$\left(\frac{0.15\ kg/kkg}{105\ m3/kkg}\right)\left(\frac{1000\ mg/l}{kg/m3}\right) = 1.4\ mg/l$$

The 24-hour maximum proposed limitation then becomes,

(0.15 kg/kkg)(2.4) = 0.36 kg/kkg.

D. Copper: The raw waste concentration for copper was observed as high as 6.2 mg/l and averaged 4.3 mg/l during sampling. The long-term monitoring results indicate a maximum 30-day average discharge of 0.042 kg/kkg which is used for the proposed limitations. Therefore, the proposed concentration basis becomes,

$$\left(\frac{0.042\ kg/kkg}{105\ m3/kkg}\right)\left(\frac{1000\ mg/l}{kg/m3}\right) = 0.40\ mg/l$$

The 24-hour maximum proposed limitation then becomes,

(0.042 kg/kkg)(2.4) = 0.10 kg/kkg.

E. Antimony: The raw waste concentration for antimony was observed as high as 7.7 mg/l and averaged 3.3 mg/l during sampling. The verification sampling results indicate an average discharge of 0.051 kg/kkg which is used as the 30-day average limitation. The concentration basis then becomes,

$$\left(\frac{0.051\ kg/kkg}{105\ m3/kkg}\right)\left(\frac{1000\ m/gl}{kg/m3}\right) = 0.48\ mg/l$$

The 24-hour maximum is then,

(0.051 kg/kkg)(2.4) = 0.12 kg/kkg.

F. Cadmium: The raw waste concentration for cadmium was observed as high as 1.3 mg/l and averaged 0.62 mg/l during sampling. The long-term monitoring results indicate a maximum 30-day average discharge of 0.020 kg/kkg which is used as the 30-day limitation. The concentration basis then becomes,

$$\left(\frac{0.020\ kg/kkg}{105\ m3/kkg}\right)\left(\frac{1000\ mg/l}{kg/m3}\right) = 0.19\ mg/l$$

The 24-hour maximum is then,

(0.020 kg/kkg)(2.4) = 0.048 kg/kkg.

G. Nickel: The raw waste concentration for nickel was observed as high as 0.74 mg/l and averaged 0.17 mg/l during sampling. The verification sampling results indicate an achievable concentration of 0.021 mg/l which compares to a literature treatability value of 0.17 mg/l. This was estimated by application of a 14 percent removal to 0.2 mg/l from Table 8-11 as demonstrated in Section 15.7.4 for nickel. Therefore, the proposed 30-day average limitation is based on 0.17 mg/l as follows:

$$(0.17\ \text{mg/l})(105\ \text{m3/kkg})\left(\frac{\text{kg/m3}}{1000\ \text{mg/l}}\right) = 0.018\ \text{kg/kkg}$$

The 24-hour maximum then becomes,

(0.018 kg/kkg)(2.4) = 0.043 kg/kkg.

The proposed limitations are summarized in Table 16-16 for BPT.

H. Mercury: The raw waste concentration for mercury was observed as high as 0.078 mg/l and averaged 0.014 mg/l during sampling. The 30-day average long-term monitoring data indicates a maximum 30-day average discharge of 0.00027 kg/kkg. At the unit flow rate of 105 m3/kkg, this reflects a discharge concentration of 0.0026 mg/l. Although significant coincidental removal of mercury is observed with a large scale BPT system, the treatment technology is not specifically oriented for the treatment of mercury. Therefore, the concentration basis for mercury is indicated in Table 16-16 for use in cases where it is found to be of serious concern.

16.7.3 Basis for Proposed BCT Limitations

The BCT limitation (applicable only to TSS and pH) was set equal to BPT because BAT is equal to BPT.

16.7.4 Basis for Proposed BAT Effluent Limitations

The Application of Advanced Level Treatment

Utilizing the cost estimates presented in this report, the Agency has analyzed the cost effectiveness of the base level systems (BPT) and various advanced level options for conventional, nonconventional, and toxic pollutant removal. The economic impacts on the Chrome Pigments Industry have been

TABLE 16-16. PROPOSED LIMITATIONS
Chrome Pigments
Best Practicable Control Technology Currently Available
Waste Water Flow: 105 m3/kkg

Pollutant	Subcategory Performance (mg/l)	VFR[1]	Concentration Basis (mg/l)		Effluent Limit (kg/kkg)	
			Max 30-day Avg	24-hr Max	Max 30-day Avg	24-hr Max
Conventional and Nonconventional Pollutants:						
Total Suspended Solids, TSS	23[3]	2.4[5]	37	89	3.9	9.4
Iron	0.30[4]	2.4	0.49	1.2	--	--
Toxic Pollutants:[2]						
Antiomony	0.30[4]	2.4	0.48	1.2	0.051	0.12
Cadmium	0.12[3]	2.4	0.19	0.46	0.020	0.048
Chromium	0.73[3]	2.4	1.1	2.6	0.12	0.29
Copper	0.25[3]	2.4	0.40	0.96	0.042	0.10
Lead	0.87[3]	2.4	1.4	3.4	0.15	0.36
Mercury	0.0016	2.4	0.0026	0.0062	--	--
Nickel	0.021[4]	2.4	0.17[6]	0.41	0.018	0.043
Zinc	0.074[3]	2.4	1.1	2.6	0.12	0.29

(1) VFR: ratio of the 24-hour variability factor to the 30-day variability factor.

(2) Also applicable to BAT and PSES which are set equal to BPT by the Agency.

(3) Long term 30-day average monitoring data from Table 16-15.

(4) Verification sampling results based on three, 24-hour composite effluent samples.

(5) VFR selected from long term data evaluation in the Titanium Dioxide subcategory.

(6) Lower limit of treatability estimate (Table 8-11).

evaluated in detail and taken into consideration in the selection of the technology basis for the proposed BAT regulations.

The Agency is proposing BAT limitations based on treatment consisting of Level 1 technology which is equivalent to BPT. The implementation of BPT/BAT will remove 3,200,000 pounds of toxic metals annually.

Technology Basis

For BAT, the Agency is proposing the identical technology basis discussed for BPT in Section 16.7.2. BAT includes no additional treatment because there are insufficient data to confirm performance and the added cost is not offset by better effluent quality.

Flow Basis

The unit flow of 105 m3/kkg is also proposed for BAT.

Selection of Pollutants to be Regulated

The basis of pollutant selection is discussed for BPT under Section 16.7.2. For BAT, the toxic metals shown in Table 16-16 are proposed for regulation. These include chromium, zinc, lead, copper, antimony, cadmium, and nickel.

Basis of Pollutant Limitations

The basis of the limitations are discussed in detail under BPT Section 16.7.2. Table 16-16 summarizes the proposed limitations for BAT which are designated by footnote 2.

16.7.5 Basis for Proposed New Source Performance Standards

Application of Advanced Level Treatment

Chrome pigment industry wastes primarily contain toxic metal pollutants which are particularly amenable to removal by alkaline precipitation and sulfide precipitation. Almost all plants combine waste water from the chrome pigment process with waste water from unrelated processes. The Agency proposes that for new sources, the waste water from the chrome pigments process be segregated from waste water from other processes unless the other waste water contains toxic metal pollutants. Segregation and separate treatment of the waste waters can conceivably reduce treatment costs, and simplify the treatment of metals without complications from unrelated waste water constituents not amenable to metals treatment.

Technology Basis

For New Source Performance Standards (NSPS), the Agency is proposing limitations based on more stringent removal of metals by sulfide precipitation before filtration in addition to BPT (Level 2). The Agency also proposes that all unrelated waste water sources which are not amenable to metals treatment, be segregated before treatment as previously discussed.

Flow Basis

The basis for the unit flow used for the purpose of proposing limitations is 105 m3/kkg and does not differ from BPT.

Selection of Pollutants to be Regulated

The same conventional, nonconventional, and toxic pollutants selected for BPT Section 16.7.2 are also considered here for the proposed NSPS limitations. These include TSS, pH, iron, and the same eight toxic metal pollutants.

Basis of Pollutant Limitations

Conventional Parameters -

A. pH: For NSPS, the BPT limitation is retained. Control of the final effluent within the range of pH 6.0 to 9.0 is required on the basis of the data presented in Appendix B of this report and the JRB Study (52).

B. TSS: For NSPS, the proposed BPT limitation is retained. Addition of sulfide precipitation is not anticipated to significantly improve or degrade the suspended solids since this treatment is not specifically intended to improve TSS removal efficiency. Therefore, the 30-day average limitation of 3.9 kg/kkg is retained based on the 30-day average long-term monitoring data (Section 16.7.2).

Nonconventional pollutants - The only nonconventional pollutant considered is iron. Iron should be controlled adequately by the proposed treatment technology and is included in Table 16-17 on a concentration basis only. The proposed concentration basis is presented as guidance in cases where iron may be of serious concern.

Toxic pollutants - The addition of sulfide treatment to the proposed base level treatment is anticipated to provide more stringent removal of toxic metals. The proposed NSPS limitations are based on literature treatability estimates

TABLE 16-17. PROPOSED LIMITATIONS
Chrome Pigments
New Source Performance Standards
Waste Water Flow: 105 m3/kkg

Pollutant	Treatability (mg/l)	VFR[1]	Concentration Basis mg/l		Effluent Limit (kg/kkg)	
			Max 30-day Avg	24-hr Max	Max 30-day Avg	24-hr Max
Conventional and Nonconventional Pollutants:						
Total Suspended Solids, TSS	23[3]	2.4	37	89	3.9	9.4
Iron	0.30[3]	2.4	0.49	1.2	--[5]	--[5]
Toxic Pollutants:						
Antimony[2]	0.40[3]	2.4	0.40	0.96	0.042	0.10
Cadmium[2]	0.01[4]	2.4	0.010	0.024	0.0011	0.0026
Chromium[2]	0.05[3]	2.4	0.05	0.12	0.0053	0.013
Copper[2]	0.05[4]	2.4	0.05	0.12	0.0053	0.013
Lead[2]	0.05[4]	2.4	0.05	0.12	0.0053	0.013
Mercury[2]	0.01[4]	2.4	0.01	0.024	0.0011	0.0026
Nickel[2]	0.05[4]	2.4	0.05	0.12	0.0053	0.013
Zinc[2]	0.02[4]	2.4	0.02	0.048	0.0021	0.0050

(1) VFR: ratio of the 24-hour variability factor to the 30-day variability factor.

(2) Also applicable to PSNS limitations.

(3) Proposed BPT limitations are retained.

(4) Lower limit of literature treatability as per the discussion in Section 8.1 and presented in Table 8-11.

(5) No effluent limitation proposed.

(Table 8-11) since no plant in the industry currently utilizes sulfide precipitation of metals on which to base specific numerical limitations.

The variability factor ratio (VFR) for the pollutants of concern are retained from the BPT limitations. The VFR is based on the Titanium Dioxide Subcategory for similar pollutants.

A. Chromium: The proposed limitation for chromium is based on the literature treatability estimate of 0.05 mg/l, since sulfide treatment is not expected to improve significantly the removal efficiency other than coincidental removal. The 30-day average limitation is therefore,

$$(0.05\ mg/l)\ (105\ m3/kkg)\left(\frac{kg/m3}{1000\ mg/l}\right) = 0.0053\ kg/kkg$$

and the 24-hour maximum limit becomes,

$$(0.0053\ kg/kkg)\ (2.4) = 0.013\ kg/kkg$$

B. Zinc: The 30-day average zinc concentration is expected to achieve 0.02 mg/l in view of the proposed technology basis and treatability values as was reported in the literature (Table 8-11). The proposed load limitation is then,

$$(0.02\ mg/l)(105m3/kkg)\left(\frac{kg/m3}{1000\ mg/l}\right) = 0.0021\ kg/kkg$$

The 24-hour maximum concentration becomes,

$$(0.0021\ kg/kkg)(1.9) = 0.0040\ kg/kkg$$

C. Lead: The 30-day average lead concentration is expected to achieve 0.05 mg/l in view of the proposed technology basis and treatability values reported in the literature (Table 8-11). The proposed load limitation is,

$$(0.05\ mg/l)(105\ m3/kkg)\left(\frac{kg/m3}{1000\ mg/l}\right) = 0.0053\ kg/kkg$$

The 24-hour maximum concentration becomes,

$$(0.0053\ kg/kkg)(2.4) = 0.013\ kg/kkg.$$

D. Copper: The 30-day average copper concentration is anticipated to achieve 0.05 mg/l based on literature treatability estimates. Therefore, the proposed limitation becomes,

$$(0.05\ mg/l)(105\ m3/kkg)\left(\frac{kg/m3}{1000\ mg/l}\right) = 0.0053\ kg/kkg$$

The 24-hour maximum concentration is then,

(0.0053 kg/kkg)(2.4) = 0.013 kg/kkg.

E. Antimony: The proposed BPT limitation for antimony is retained since sulfide treatment is not expected to improve significantly the removal of efficiency other than coincidental removal. Therefore, the proposed 30-day average limitation is 0.042 kg/kkg in Table 16-17.

$$(0.40\ mg/l)(105\ m3/kkg)\left(\frac{kg/m3}{1000\ mg/l}\right) = 0.042\ kg/kkg$$

The 24-hour maximum is then,

(0.042 kg/kkg)(2.4) = 0.10 kg/kkg.

F. Cadmium: The 30-day average cadmium concentration is anticipated to achieve 0.01 mg/l based on literature treatability in Table 8-11. Therefore, the proposed limitation becomes,

$$(0.01\ mg/l)(105\ m3/kkg)\left(\frac{kg/m3}{1000\ mg/l}\right) = 0.0011\ kg/kkg$$

The 24-hour maximum concentration is,

(0.0011 kg/kkg)(2.4) = 0.0026 kg/kkg.

G. Nickel: The 30-day average nickel concentration is expected to achieve 0.05 mg/l based on literature treatability estimates in Table 8-11. Therefore, the proposed limitation becomes,

$$(0.05\ mg/l)(105\ m3/kkg)\left(\frac{kg/m3}{1000\ mg/l}\right) = 0.0053\ kg/kkg$$

The 24-hour maximum becomes,

(0.0053 kg/kkg)(2.4) = 0.013 kg/kkg.

H. Mercury: Sulfide precipitation of mercury can achieve approximately a 0.01 mg/l concentration based on literature treatability. Therefore, the proposed 30-day average load limitation is,

$$(0.010\ mg/l)(105\ m3/kkg)\left(\frac{kg/m3}{1000\ mg/l}\right) = 0.0011\ kg/kkg$$

The 24-hour maximum limitation is,

(0.0011 kg/kkg)(2.4) = 0.0026 kg/kkg.

16.7.6 Basis for Proposed Pretreatment Standards

Existing Sources

There are currently nine indirect discharge chrome pigment plants in the subcategory. For Pretreatment Standards for Existing Sources (PSES), the Agency is proposing limitations based on BAT described in Section 16.7.4. The pollutants to be limited are chromium, zinc, lead, copper, antimony, cadmium, and nickel as presented in Table 16-16.

New Sources

For Pretreatment Standards for New Sources (PSNS), the Agency is proposing limitations based on NSPS. The pollutants are indicated in Table 16-17.

Intentionally Blank Page

SECTION 17

HYDROGEN CYANIDE INDUSTRY

17.1 INDUSTRY PROFILE

17.1.1 General Description

Over 50 percent of the Hydrogen Cyanide manufactured is produced by the Andrussow process, while about 40 percent is a by-product from acrylonitrile manufacture. A major portion of the production is used in the manufacture of methyl methacrylate, plexiglass molding and extrusion powders, and surface coating resins. It is also used as a fumigant for orchards and tree crops. The industrial data profile for this industry is given in Table 17-1, while the status of regulations is given in Table 17-2.

17.1.2 General Process Description and Raw Materials

The hydrogen cyanide subcategory in this study is confined to the Andrussow process, in which air, ammonia and methane are reacted to produce hydrogen cyanide.

The raw materials are reacted at elevated temperatures (900-1000 degrees C) over a platinum catalyst. The reaction is given as:

$$2CH4 + 2NH3 + 302 = 2HCN + 6H20 \quad (1)$$

The source of methane is natural gas containing 50 to 100 percent methane by volume. In addition to hydrogen cyanide, the reacted gases contain ammonia, nitrogen, carbon monoxide, carbon dioxide, hydrogen and small amounts of oxygen, as well as traces of organic nitriles formed from nonmethane hydrocarbon components of natural gas. The reactor gases are cooled and then scrubbed in one of two processes which are used to remove the unreacted ammonia. In one patented process the gases are scrubbed with phosphate liquor, the resulting solution is decomposed and the phosphate solution is recirculated. The recovered ammonia is recycled to the reactor. In the second

Preceding page blank

TABLE 17-1. SUBCATEGORY PROFILE DATA SUMMARY

SUBCATEGORY	HYDROGEN CYANIDE*
Total subcategory capacity rate	289,000 kkg/year
Total subcategory production rate	165,500 kkg/year
No. of plants in this subcategory	7
Plant age range:	
Minimum	5 years
Maximum	30 years
308 Data** on file for	2
With total capacity of	178,500 kkg/year
With total production of	115,500 kkg/year
Representing capacity	62 percent
Representing production	70 percent
Average production	57,750 kkg/year
Average capacity utilization	65 percent
Waste water flow per unit product	
Minimum	10 m^3/kkg of HCN
Maximum	57 m^3/kkg of HCN

Sources of data are Stanford Research Institute, Directory of Chemical Producers, U.S.A., 1977, U.S. Department of Commerce, Current Industrial Reports, December 1977; Energy and Environmental Analysis, Inc.; Draft Report, "Preliminary Economic Assessment of Effluent Limitations in the Inorganic Chemical Industry ",June 1978 and "Economic Analysis of Proposed Revised Effluent Guidelines and Standards for the Inorganic Chemicals Industry March, 1980.

* Includes data from plants using Andrussow Process and from plants recovering HCN as a byproduct from the manufacture of acrylonitrile.

**Includes data from plants using Andrussow Process.

TABLE 17-2. STATUS OF REGULATIONS - EFFLUENT LIMITATION GUIDELINES

SUBCATEGORY HYDROGEN CYANIDE

SUBPART AP (40 CFR 415.420, 5/22/75)

Product / Process	Parameters	STANDARDS BPCTCA* Max.[1] kg/kkg (mg/l)	BPCTCA* Avg.[2] kg/kkg (mg/l)	BATEA Max. kg/kkg (mg/l)	BATEA Avg. kg/kkg (mg/l)	NSPS Max. kg/kkg (mg/l)	NSPS Avg. kg/kkg (mg/l)
Andrussow Process	TSS	2.4 (48.0)**	1.2 (24.0)				
	CN	0.005 (1.0)	0.025 (0.5)				
	CN(A)	0.005 (0.1)	0.005 (0.05)				
	BOD_5	3.6 (72.0)	1.8 (36.0)				
	NH_3-N	0.36 (7.2)	0.18 (3.6)				

*Sections 415.420, 415.421, and 415.422 were revoked by the Agency (41 FR 10681, February 23, 1977).

[1]Max. = Maximum of any one day.

[2]Avg. = Average of daily values for thirty consecutive days shall not exceed.

** flow basis 50,000 l/kkg.

process sulfuric acid is used to absorb ammonia from the reactor gases. At one plant the resulting ammonium sulfate solution is used for the manufacture of another product.

The hydrogen cyanide is removed from the ammonia scrubber effluent gases by absorbtion in cold water, and the waste gases are vented to the atmosphere. The absorbed solution containing hydrogen cyanide, water, and other contaminants is distilled to produce HCN gas of over 99 percent purity.

The water produced during the initial reaction (Equation 1) of the formation of hydrogen cyanide is purged with the distillation bottom stream and is either recycled to the absorber or discharged to the treatment facility. In order to be recycled, the distillation bottom water has to be cooled by refrigeration prior to reuse in the HCN absorber unit. At plant locations where cold water is readily available in large quantities, it can be used on a once-through basis with a significant savings in energy costs. Figure 17-1 presents a general block diagram for the manufacture of hydrogen cyanide by the Andrussow process.

17.2 WATER USE AND WASTE SOURCE CHARACTERISTICS

17.2.1 Water Use

Water is used in noncontact cooling in the absorber, pump seal quenches, flare stack flushes, for washdown and cleanup of tank cars, for absorption of the product from reactor gases and for washing equipment and cleaning up leaks and spills. Table 17-3 gives the detailed water consumption at one plant and also the total consumption at two plants. There is a pronounced difference in water usage at these two plants due to the use of refrigeration at Plant #782 which makes possible the recycling of absorber water from the distillation unit back to the absorber. This practice is energy intensive but is required in locations where an abundant supply of cool water is not available. Plant #765 has such a supply and uses absorber water on a once-through basis. In this case, a much larger flow must be treated prior to discharge.

17.2.2 Waste Sources

The following are sources of waste water produced from the manufacture of hydrogen cyanide by the Andrussow process:

Distillation Bottoms

The waste water contains ammonia, hydrogen cyanide and small amounts of organic nitriles. The water consists of the water produced by the reaction plus scrubber water used for the

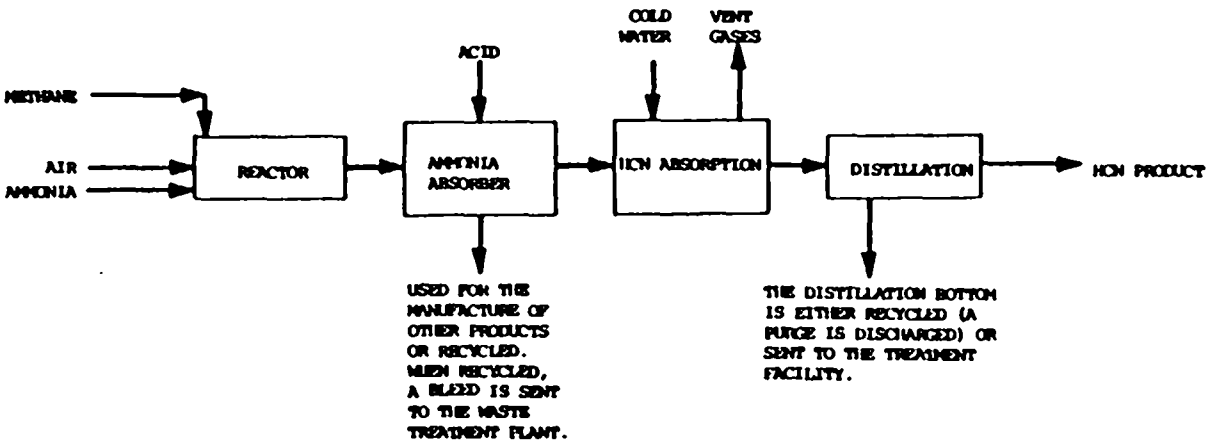

Figure 17-1. General process flow diagram for production of hydrogen cyanide by the Andrussow process.

TABLE 17-3. WATER USAGE IN HYDROGEN CYANIDE - ANDRUSSOW PROCESS SUBCATEGORY

Plant	Water Usage, (m^3/kkg of HCN) Total Consumption	Noncontact Cooling
#782[1]	29.5	18.9
#765	58.3	8.00

[1] Detail water usage (m^3/kkg) at Plant #782 is:

Noncontact cooling	=	18.9
Direct process contact	=	7.45
Indirect process contact (pumps, seals, leaks, spills, etc.)	=	0.71
Maintenance, e.g. cleaning and work area washdown	=	0.31
Noncontact ancillary uses (boilers, utilities, etc.)	=	0.67
Exported steam	=	1.44

absorption of HCN. The absorption water bottoms are either recycled to the HCN absorber or discharged to the treatment facility. Even if the distillation bottom stream is recycled to the absorber, a portion of it is discharged to stop the buildup of impurities.

Scrubber Streams

If the ammonia scrubber liquid is recycled, a portion of it has to be purged to control the accumulation of impurities. The bleed contains the acid used from scrubbing and minor amounts of organic nitriles. The scrubber solution can also used for the manufacture of other products in which case nothing is discharged to the treatment plant.

Other Waste Water

This includes leaks and spills, equipment and tank car washings, noncontact cooling water blowdown and rainfall runoff. The tank cars are washed out with dilute acid or alkali to remove any contaminants present, which, if allowed to remain in the tank car, can polymerize the hydrogen cyanide causing safety hazards due to possible explosion during shipment. The noncontact cooling water may be contaminated with the product as a result of leaks. The recirculated cooling water is monitored for cyanide and the cooling tower blowdown is discharged to the waste water treatment facility. During shutdown, the equipment is drained to avoid freeze-up and the resulting waste water is discharged to the treatment facility.

The quantity of waste water produced and treated at two plants producing hydrogen cyanide by the Andrussow process is given in Table 17-4. The large variation in flow exists because the water used to absorb the hydrogen cyanide from the reactor gases in Plant #765 is not recycled. As discussed earlier, that plant is situated where sufficient cold water is available for once-through use. Since the cold water is readily available at a low cost, the water used for absorption is discharged. A similar plant practicing recycling, in the absence of available cold water, can achieve a total waste effluent of 7.1 m3/kkg of HCN.

17.3 DESCRIPTION OF PLANTS VISITED AND SAMPLED

17.3.1 Screening

Plant #765 was visited and the waste water sampled during the screening phase of the program. The combined wastes consist of distillation bottoms, ammonia recovery purge liquor, tank car washings, leaks, spills and equipment clean out, purge from the

TABLE 17-4. WASTE FLOW DATA FOR HCN PRODUCTION BY THE ANDRUSSOW PROCESS

Plant	Total waste going to the treatment facility (m^3/kkg)
#765	57
#782	9.9*

*The breakdown and flow of the different waste streams comprising the total is given below:

Source	Unit Flow (m^3/kkg)
Recovery and purification	6.3
Pump seal quenches	0.58
Flare stack flushes	0.09
Sample hoods	0.02
NH_3 stripper caustic	0.24
Steam condensate from NH_3 stripper	0.90
Freeze protection	0.06
Washdowns and cleanup	0.25
Boiler blowdown and condensate	1.48

noncontact cooling water system and stormwater runoff. These combined wastes are commingled with the other cyanide product waste waters and sent to the alkaline chlorination treatment facility. The first unit of the treatment facility is a trench where the pH of the waste water is raised to the range of 8.5 to 11 with dilute caustic soda. The caustic is added under controlled mixing conditions with continuous automatic pH recording and caustic feed adjustment. The pH-adjusted waste water is sent to two 8-hour retention ponds. Chlorination is accomplished by adding sodium hypochlorite at the pond entrance. The chlorinate waste water from the 8-hour ponds are alternately discharged to another small pond having one hour of detention and equipped with baffles and agitators. Caustic and chlorine are added as required in the one-hour pond to achieve the low levels of cyanide desired. The effluent from the pond is discharged to a POTW. The pond contains a flow controller/analyzer, which will block the discharge from the pond when a high cyanide level is detected in the treated effluent. Figure 17-2 is a flow diagram of the treatment process indicating the sampling location used during the screening program.

Composite sampling conducted consisted of one 48-hour composite sample for nonvolatile organics, metals and mercury and one 24-hour composite sample of BOD5, TSS, TDS, NH3, Fe, Cr, Zn, Cu and settleable solids. Grab samples for volatile organics, cyanide, phenols, temperature and pH were collected on two consecutive days at each sampling location. Table 17-5 gives the flow data and concentration and unit loads of ammonia-nitrogen, total cyanide and thallium, for the sampled streams. It is believed that thallium is not contributed by the hydrogen cyanide manufacturing process.

17.3.2 Verification

Plant #765 was sampled again in the verification phase. One additional stream of hydrogen cyanide waste water was sampled in the verification phase at a point upstream of mixing with other cyanide product waste water. This stream is identified in Figure 17-2. The variation in the flow of the streams in the two sampling phases was small. Table 17-6 gives the flow and pollutant data of the sampled streams.

The second hydrogen cyanide plant sampled in the verification phase was Plant #782. The waste water from the hydrogen cyanide plant mainly consists of blowdown from the distillation column which is combined with a portion of the other product waste water and sent to an ammonia stripper. Effluent from the ammonia stripper is mixed with the rest of the process waste water from other products and sent to a single stage biological system. The primary treatment facility consists of oil skimmers, grit removal and pH adjustment. The

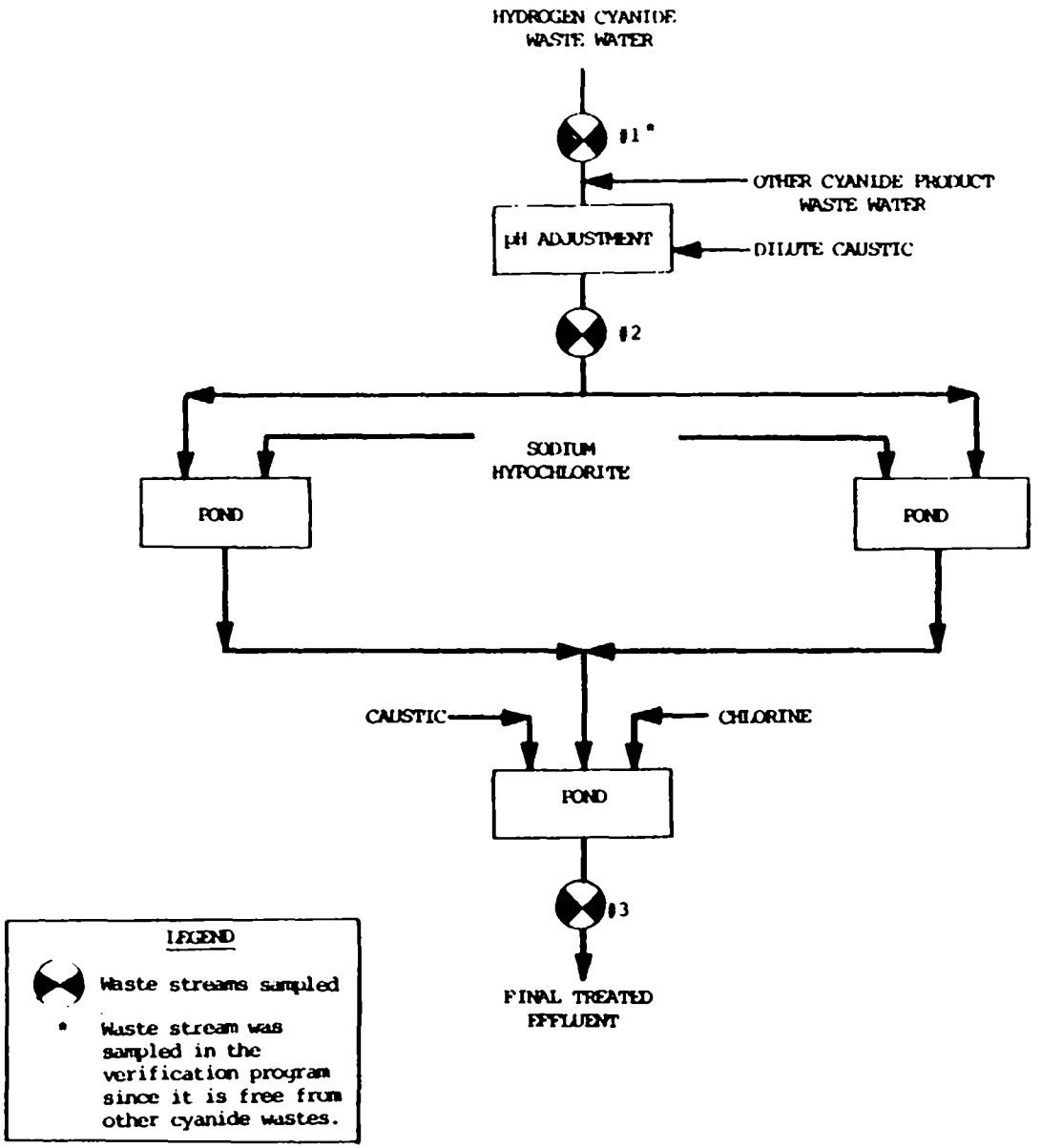

Figure 17-2. General waste water treatment process flow diagram at plant #765 showing the sampling points. (Hydrogen cyanide manufacture.)

TABLE 17-5. FLOW AND POLLUTANT DATA OF THE RAW AND TREATED WASTE STREAMS OF PLANT #765 PRODUCING HYDROGEN CYANIDE BY ANDRUSSOW PROCESS

Stream Description	Unit Flow (m^3/kkg)	NH_3-N $\left(\frac{mg}{l}\right)$	NH_3-N $\left(\frac{kg}{kkg}\right)$ (1)	Total Cyanide $\left(\frac{mg}{l}\right)$	Total Cyanide $\left(\frac{kg}{kkg}\right)$ (1)	Thallium $\left(\frac{mg}{l}\right)$	Thallium $\left(\frac{kg}{kkg}\right)$ (1)
#2 Influent to Treatment	57 (2)	7.8	4.4 (3)	107	6.1 (3)	.028	0.0016 (3)
#3 Treatment (Alkaline Chlorination) Effluent	57 (2)	35	2.0 (3)	0.36	0.02 (3)	.010	0.00057 (3)

(1) Unit Load in kg/kkg = Unit Flow $\left(57 \ \frac{m^3}{kkg}\right)$ x pollutant concentration in mg/l x $\left(\frac{1000 \ mg/l}{kg/m^3}\right)$

(2) The stream is a commingled waste water. The flow given is the amount contributed by the HCN process.

(3) The pollutant load was calculated by apportioning the mass emitted between the two waste streams on the basis of measured flows. This is clearly a very approximate process and the results must be used with caution.

TABLE 17-6. FLOW AND POLLUTANT CONCENTRATION DATA OF THE SAMPLED WASTE STREAMS FOR PLANT #765 PRODUCING HYDROGEN CYANIDE

Stream Description	Unit Flow (m^3/kkg of HCN)	SS Load (kg/kkg of HCN)	NH_3-N Load (kg/kkg of HCN)	CN (F) (kg/kkg of HCN)	CN(T) (kg/kkg of HCN)
#1 Raw HCN waste	57	1.1	27	0.82	1.6
#2 Influent to the pond[1]	57[1]	NA	11 [2]	0.39 [2]	1.6
#3 Treated effluent from the final pond	57[2],[3]	1.9[2]	7.1 [2]	NA	0.00015

[1] The stream is a commingled waste water. The flow given is the amount contributed by the HCN process.

[2] The pollutant load was calculated by apportioning the mass emitted between the two waste streams on the basis of measured flows. This is clearly a very approximate process and the results must be used with caution.

[3] The addition or loss of water from rainfall, addition of chemicals and evaporation has not been estimated.

NA = Not Available

effluent from primary treatment goes through an API separator and into an aerated lagoon. Effluent from the lagoon is flocculated and sent to a clarifier. The overflow from the clarifier is sent to a final settling basin before final discharge. The surface drainage consisting of runoff, wash down, etc., from the hydrogen cyanide and other process areas is collected separately. The water is sent first to a surface pond where it undergoes a two-stage pH adjustment and then is piped to a trickling filter. It then merges with the treated process waste waters in the clarifier. A general flow diagram of the treatment process including streams sampled is shown in Figure 17-3.

Table 17-7 gives flow and concentration data of the sampled streams. In Table 17-8, the unit waste flow and unit pollutant loads are given for the raw and treated effluent. Because of intermixing of various product waste water streams, the unit pollutant loads (especially for treated effluent) were calculated based on hydraulic loadings and the method used is only an approximation. The principal process waste water from the hydrogen cyanide plant is the waste from the recovery and purification operation and has a loading of 6.3 m3/kkg of HCN. The total waste water going to the treatment facility from the hydrogen cyanide plant has a loading of approximately 9.9 m3/kkg of HCN, consisting of both process contact and noncontact effluents.

In calculating the pollutant loads, (Table 17-8) the loss or gain of water to the treatment system such as evaporation, loss through filtered solids, precipitation and the water introduced by treatment chemicals has not been included because it was considered insignificant in comparison to other factors.

17.3.3 Toxic Pollutant Concentrations

Total cyanide and thallium were the toxic pollutants detected in the raw waste from Plant #765 which was sampled in the screening phase. It is believed that thallium in the waste water is not contributed from the hydrogen cyanide process.

The HCN waste water at Plant #765 is mixed with other product waste waters and the combined flow was sampled upstream of the treatment system. It is probable that thallium is contributed from these other product waste waters.

The raw waste stream was not analyzed for free cyanide. The same plant was sampled again with another plant in the verification phase. In addition to total cyanide, free cyanide was found in significant concentrations in the raw process waste sources from the two HCN plants. Free cyanide in the waste

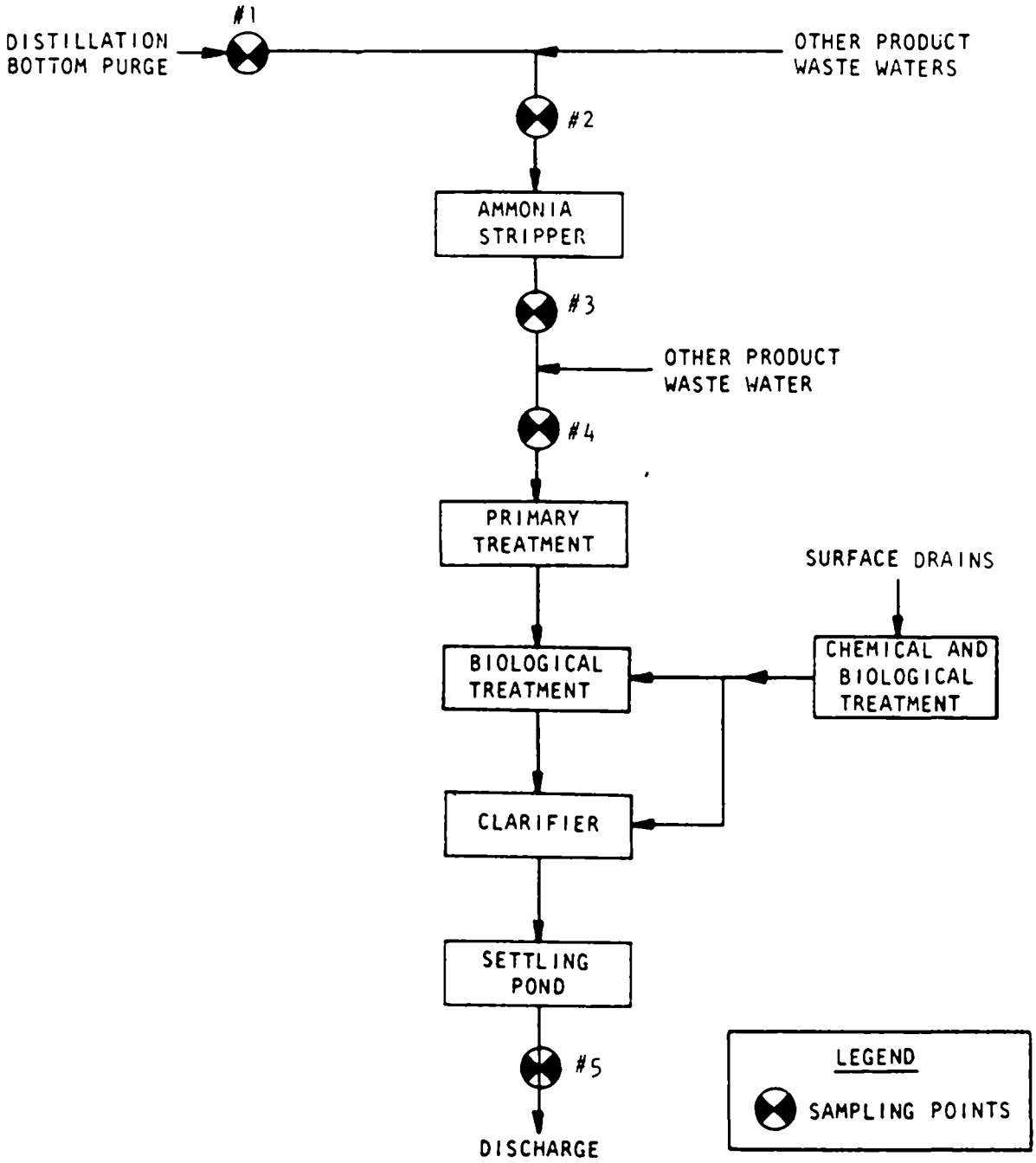

Figure 17-3. General waste water treatment process flow diagram at plant #782 showing sampling points. (Hydrogen cyanide manufacture.)

TABLE 17-7. FLOW AND POLLUTANT CONCENTRATION DATA OF THE SAMPLED WASTE STREAMS FOR PLANT #782 PRODUCING HYDROGEN CYANIDE

Stream No.	Waste Stream Description	Flow m^3/day	CN(T)	CN(F) (mg/l)	NH_3-N	TSS
1	Distillation bottom purge (1)	(6.3) (2)	71	62	886	24
2	Ammonia stripper influent (3)	5400	167	145	410	76
3	Ammonia stripper effluent (3)	5400	51	41	41	162
4	Influent to primary treatment facility (3)	6400	31	7.0	1380	110
5	Final treated effluent (3)	NA	2.2	1.7	5.6	74

(1)- The total waste is composed of the blowdown from three distillation columns. Three 24-hour composite samples were collected for each unit. The pollutant concentration value (given in mg/l) is an average of the three composited samples for the three waste stream sources.

(2)- The value given is the total unit flow in m^3/kkg of HCN for the three purge streams.

(3)- The stream is a combined waste water. It includes the waste effluents from hydrogen cyanide and other products.

TABLE 17-8. UNIT FLOW AND UNIT POLLUTANT LOADING FOR RAW AND TREATED WASTE EFFLUENTS AT PLANT #782

Stream	Unit Flow (m^3/kkg)	Unit Pollutant Loading (kg/kkg) (1) Total Cyanide $CN_{(T)}$	Free Cyanide $CN_{(F)}$	Ammonia-N NH_3-N	Total Suspended Solids TSS
Process raw waste water (distillation bottom purge)	6.3	0.45	0.39	5.6	0.15
Process waste water treated effluent	6.3 (2)	0.014	0.011	0.035	0.47
Total HCN waste water treated effluent (2)	9.9 (3)	0.022	0.017	0.055	0.74

(1) Unit pollutant load = unit flow (m^3/kkg) X pollutant concentration (in mg/l from Table 17-7) X $\left(\frac{kg/m3}{1000\ mg/l}\right)$

(2) The pollutant load was calculated by apportioning the mass emitted from the total treated effluent (which includes other product waste water) on the basis of measured flow contributed by the HCN process. This is clearly an approximate process and the results must be used with caution.

(3) The waste water flow consists of direct process contact and noncontact effluent from the HCN plant going to the treatment system.

water consists of hydrogen cyanide, sodium or potassium cyanide and cyanogen chloride which may be present as a result of chlorination (especially in the treated effluent). Total cyanide includes the free cyanide and cyanides found in metal complexes (such as sodium ferrocyanide or sodium ferricyanide). No toxic organic pollutants were found in significant concentrations in the HCN plant raw waste sampled. The concentrations of the toxic pollutants found in the raw waste water in the screening and verification were:

Maximum Raw Waste Concentration Observed
(μg/l)

Pollutant	Screening Plant #765	Verification Plants #765, #782
Thallium	25	Not Determined
Cyanide (Total)	166,000	186,000
Cyanide (Free)	Not Determined	172,000

The general sampling methodology used in the screening and verification program is described in Section 5.1.2. A total of nine days of sampling was conducted at Plants #765 (sampled twice) and #782. Thirteen waste water sampling points were involved which included the raw waste water, combined waste water and combined treated effluent streams. The evaluation of the toxic metal and toxic organic pollutant content of these process streams was based on total analytical data points from both the screening and verification phases.

The daily toxic pollutant waste load in the raw waste was calculated from the effluent waste flow rate and the measured pollutant concentration of the toxic pollutant.

This is given by:

$$\text{Daily loading (as kg of pollutant per day)} = \frac{(C)(Q)}{1000}$$

Where:

C is the concentration of the pollutant expressed in units of mg/l (Note: kg/m3 = 1000 mg/l, and

Q is the waste stream flow rate expressed in units of m3/day (m3, a cubic meter, is equal to 264.2 U.S. gallons). Similarly, the unit loadings were calculated from the reported hydrogen cyanide production rate, the waste stream flow rate, and the measured pollutant concentration.

$$\text{Unit loading (as kg of pollutant per kkg of hydrogen cyanide)} = \frac{(C)(Q)}{1000P}$$

Where C and Q are the same as described above, and P is the hydrogen cyanide production rate expressed in units of kkg/day (kkg is 1000 kg, a metric ton, which is equal to 2205 lbs).

In the case of two or more process waste streams going to the treatment system the daily raw waste load of the toxic pollutant was calculated by determining the combined pollutant load of the individual streams.

The unit raw waste loading for a pollutant (toxic, conventional or nonconventional) was calculated by dividing the daily pollutant load with the average daily production of hydrogen cyanide at the plant.

$$\text{Unit pollutant Load in the raw waste (kg/kkg of HCN)} = \frac{\text{Pollutant Load (in kg/day)}}{\text{Average Daily HCN Production (kkg/day)}}$$

Table 17-9 gives the toxic, conventional and nonconventional pollutant loadings of the raw waste for Plants #765 and #782 which were sampled in the screening and verifcation phases. The overall average pollutant loads for the sampled plants are given in the last column of the table.

The approximate toxic pollutant generated per year by the entire subcategory is estimated by multiplying the overall average unit pollutant loading (Table 17-9) with the hydrogen cyanide subcategory production from Table 17-1 (165,500 kkg/yr).

Pollutant	Waste Load (kg/year)
Cyanide (Free)	100,000
Cyanide (Total)	450,000

17.4 POLLUTION ABATEMENT OPTIONS

17.4.1 Toxic Pollutants of Concern

The toxic pollutants of concern in the HCN raw waste are free (or oxidizable) cyanide and total cyanide. No organic toxic pollutants of significance were found in the raw waste of the sampled plants.

17.4.2 Process Modifications and Technology Transfer Options

Process modifications have not been identified for the subcategory.

TABLE 17-9. SUMMARY OF POLLUTANT RAW WASTE LOADING FOUND IN SCREENING AND VERIFICATION SAMPLING

SUBCATEGORY HYDROGEN CYANIDE

Average Daily Pollutant Loading and Concentrations at Plants Sampled

kg/kkg of HCN
(mg/l)

Pollutant	#765(s)	# 765(v)	# 782(v)	Overall Average
TOXIC				
Free Cyanide	NA	0.82 (14)	0.39 (62)	0.61
Total Cyanide	6.1 (110)	1.6 (29)	0.45 (71)	2.7
Conventional and Nonconventional				
TSS	NA	2.0 (35)	0.15 (24)	1.1
NH_3-N	4.4 (78)	27 (480)	5.6 (890)	12

(S) = Sampled in screening phase

(V) = Sampled in verification phase

17.4.3 Best Management Practices

No best management practices have been identified for the subcategory.

17.4.4 Prevailing Control and Treatment Practices

Out of a total of seven plants currently producing hydrogen cyanide by the Andrussow Process, 308 data is available for only two. The production at these two plants constitutes more than 70% of the total subcategory production. Since the two plants produce a significant amount of the total subcategory production, their waste water treatment technologies are taken as the subcategory treatment practices. The two plants were visited to review the treatment systems and to collect waste effluent samples.

Plant #765 has a high volume effluent because the water used to absorb the reactor gases is not recycled since low cost cold water is readily available at the site. The waste water consisting of scrubber purge, absorption water, and plant run-off is mixed with other cyanide product waste waters and sent to an alkaline chlorination system. The pH of the waste water is raised to about 10 with dilute caustic in a small pond which has a retention time of two hours and then it is discharged to two 8-hour ponds where sodium hypochlorite is added to oxidize the cyanide to cyanate. The chlorinated waste water is transferred to a small pond equipped with agitators and baffles before final discharge to a POTW. Caustic or chlorine is added to the final pond to achieve the desired low levels of cyanide. The treatment system is shown in Figure 17-2.

Plant #782 uses a single-stage biological treatment system for the treatment of effluent from the hydrogen cyanide plant. The process waste water from the HCN plant consists mainly of distillation column blowdown and is combined with other cyanide product waste water and sent to an ammonia stripper. The effluent from the stripper combines with other product waste waters and is treated by means of an oil separator, a grit chamber, a compactor, a second API separator, an aerated lagoon, a flocculator and a final clarifier. The overflow from the clarifier is sent to the final settling basin before discharge. The run-off from the HCN plant and other product manufacturing areas is combined and sent to a pond for a two-stage pH adjustment. The effluent from the pond is treated by a trickling filter and clarifier, and the clarifier effluent is mixed with the treated process waste water. A general block diagram of the treatment system is shown in Figure 17-3.

17.4.5 Advanced Treatment Technologies

The three pollutants of concern in hydrogen cyanide plant effluents are cyanide, ammonia and chlorine. The treatment

technologies for cyanide removal include alkaline chlorination, biological treatment, ozonation, wet air oxidation, electrolytic decompostion, wet thermal decompostion, acidification, activated carbon, permanganate oxidation, lime reaction with sulfur, radiation, evaporative recovery, catalytic oxidation and ion exchange. Except for alkaline chlorination and biological treatment, the remaining treatment technologies are not effective or advantageous for one or more of the following reasons:

A. The technology has low cyanide removal efficiency.

B. The technology cannot treat waste water with high cyanide concentrations.

C. The technology has air pollution problems.

D. The technology has high operating costs.

The free cyanide in the raw waste is readily oxidizable and exerts a chlorine demand. Sufficient chlorine is added to react with ammonia and to oxidize cyanide. The presence of large amounts of ammonia will increase the cost of chlorination. If costs are too extensive, residual ammonia in the raw waste effluent can be reduced by steam or air stripping before alkaline chlorination to reduce the amount of chlorine required.

17.5 SELECTION OF APPROPRIATE TECHNOLOGY AND EQUIPMENT

17.5.1 Technologies for Different Treatment Levels

Level 1 (BPT)

Two-stage alkaline chlorination followed by pH adjustment was chosen for the removal of cyanide from the raw waste effluents. The technology is being practiced in the industry. The flow diagram of the treatment system is shown in Figure 17-4.

Level 2 (BAT)

The treatment is the same as BPT (Level 1) except that residual chlorine is reduced to a lower level by treatment with sulfur dioxide. Chlorine in adequate amounts is added to remove ammonia and to oxidize cyanide. Where practiced, steam or air stripping of ammonia has not been considered as a part of the treatment system since the value of the recovered ammonia is the justification for doing it. It has been assumed to be process

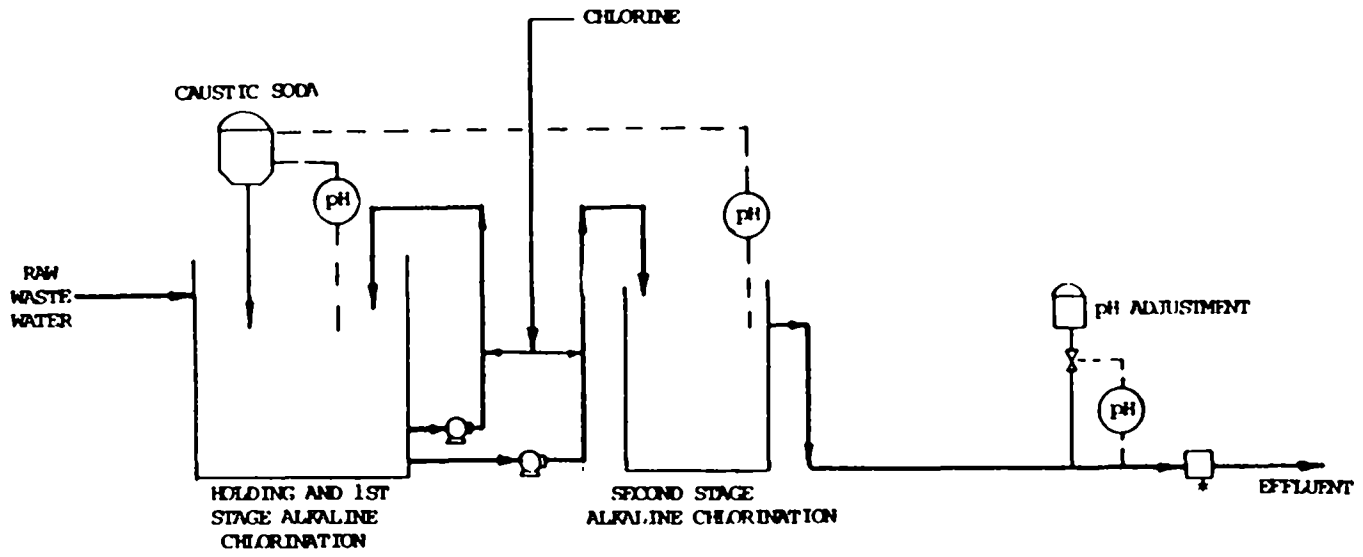

*Includes flow monitoring, pH monitoring and sampler.

Figure 17-4. Level 1 waste water treatment for hydrogen cyanide subcategory.

related. The general flow diagram of the treatment process is given in Figure 17-5.

17.5.2 Equipment for Different Treatment Levels

Equipment Functions

In level 1, the raw waste water enters a holding tank equipped with an external pump and recirculation system. Caustic soda and chlorine are added and the tank contents are mixed by the recirculation pump. Following this first stage alkaline chlorination, the waste water is chlorinated further in a second tank which is equipped with automatic pH control The final effluent is neutralized to pH 6-9 before discharge. In Level 2, using the same equipment as in Level 1, the chlorine feed to the second stage alkaline chlorination system is increased. To remove excess chlorine before release, sulfur dioxide is fed by a modified gas chlorinator, with oxidation-reduction potential control. As in Level 1, the effluent is then adjusted to pH 6-9 before discharge.

Chemicals and Handling

Caustic soda solution, chlorine, sulfur dioxide, and sulfuric acid are used in the waste treatment process. Caustic soda and sulfuric acid are common industrial chemicals which pose no special hazards when handled by conventional corrosion-resistant feeding equipment. Chlorine and sulfur dioxide are received in one-ton containers as compressed gases, and are fed as water solutions by vacuum-controlled equipment designed for the specific chemical. No unusual chemical feeding or handling problems are anticipated, provided precautions are taken to prevent gas leaks and to guard against corrosive attack.

Separation and Removal of Solids

Since few solids are produced in the treatment process, there is no significant sludge disposal problem.

Monitoring Requirements

Internal process monitoring is done largely with automatic sensing and control equipment for regulating pH and chlorine/sulfur dioxide residuals. Field tests for cyanide and/or chlorine in the effluent should be made regularly by the operator, and 24-hour composite effluent samples should be collected and analyzed for cyanide as required in local or NPDES permits.

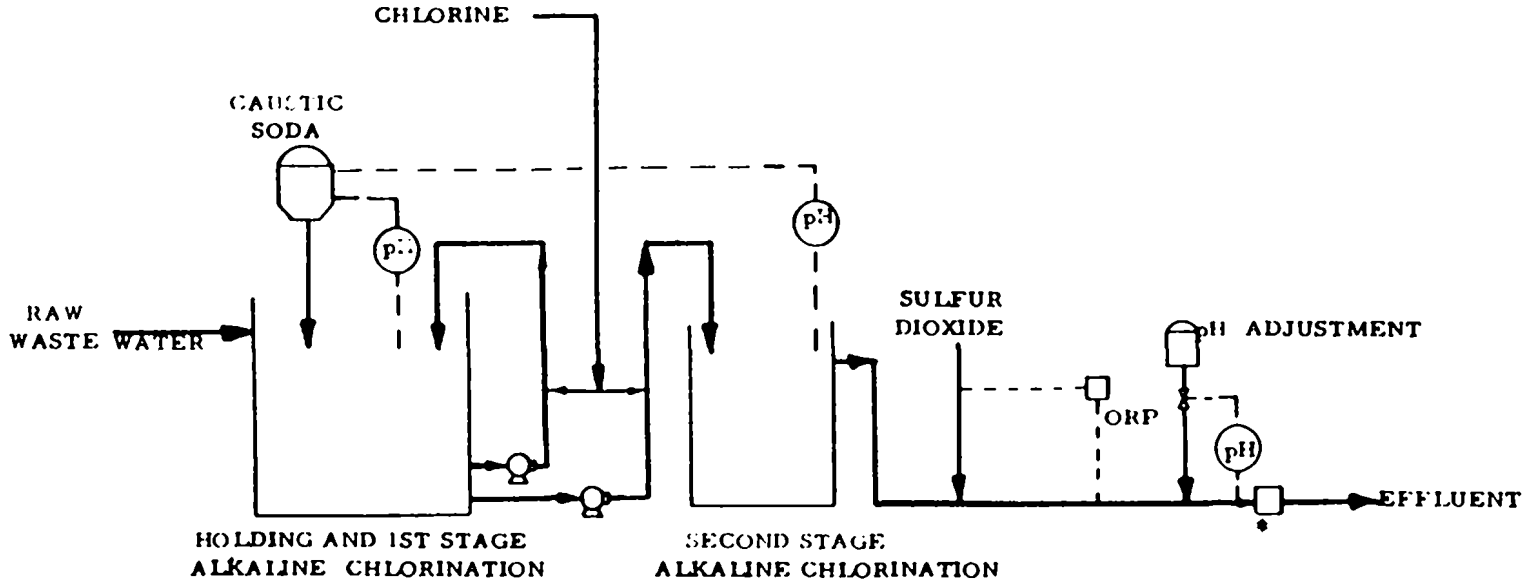

*Includes flow monitoring, pH monitoring and sampler.

ORP - Oxidation Reduction Potential Control

Figure 17-5. Level 2 waste water treatment for hydrogen cyanide subcategory.

17.6 TREATMENT COST ESTIMATES

17.6.1 General Discussion

A model plant concept was developed as a basis for estimating treatment costs. For conceptual design a representative unit waste flow (cubic meters per kkg of HCN) was selected, together with three different HCN production rates. The latter were chosen to cover most of the subcategory production range. The selected daily HCN production for the model plant was multiplied by the selected unit flow to obtain the volume of waste water passing to the treatment system. The selected unit raw waste pollutant load was also multiplied by the model plant production rate to determine the pollutant load on the treatment system. Capital and equipment costs were then calculated based on developed conceptual design parameters for each model plant production rate.

Waste Water Flow

The unit process waste water flow for the two plants visited in this study are 6.3 m3/kkg of HCN (Plant #782) and 57 m3/kkg of HCN (Plant #765). The difference results from the different absorption water discharge practices at the two plants. (See Section 17.2.2). The model plant has been developed using the larger unit flow rate of 57 cubic meter/kkg of HCN, since this is a more conservative approach. The Agency considered developing effluent limits for two different levels of flow but rejected it because of the cost, complexity, and difficulty in implementing the approach.

For waste water treatment cost estimates, three production levels were selected for the model plant. These are 31,800, 50,900 and 63,600 kkg/yr.

Waste Water Pollutant Load

The three pollutants of concern in the subcategory are cyanide (oxidizable and total), ammonia and chlorine. Chlorine is not present in the raw waste but is added during alkaline chlorination treatment. The average value of 0.61 kg of free cyanide/kkg of HCN and 12 kg of NH3/kkg of HCN (Table 17-9) developed from the screening and verification results were used for the model plant raw waste loads.

Chemicals Used

At the BPT level of treatment, alkaline chlorination requires 33 kg of chlorine and 5.0 kg of caustic per kkg of HCN. For BAT treatment, 9.0 kg of SO2 per kkg of HCN is used for

dechlorination in addition to the chemicals used for BPT treatment.

Solids Generated

Few, if any, solids are produced in treating HCN production wastes.

The costs shown in Table 17-10 at each level of treatment correspond to BPT (Level 1) with incremental costs to meet the more stringent BAT requirements.

The estimated costs for the three model plants at different production levels are given in Table 17-10, 17-11, and 17-12. As mentioned earlier, both the hydraulic and pollutant loads per unit of production are held constant over the entire range of production.

Annual treatment cost as a function of production and treatment cost per ion of HCN produced are shown graphicallv in Figures 17-6 and 17-7, respectivelv.

Table 7-13 presents a summary of the unit cost distribution between amorization, operation and maintenance cost components at various production rates and levels of treatment.

17.7 BASIS FOR REGULATIONS

17.7.1 Evaluation of BPT Treatment Practices

A total of seven plants produce hydrogen cyanide by the Andrussow Process. At one facility the raw wastes from the hydrogen cyanide plant is combined with the waste from an organic cyanide product and sent to a biological treatment system to reduce organic and cyanide pollutants. Five of the other seven HCN producers (using the Andrussow Process) use alkaline chlorination for treatment of raw waste effluents. There is no available information concerning the treatment practices at the other two plants.

17.7.2 Basis for Proposed BPT Limitations

Technology Basis

The predominant treatment practice for raw waste effluent in the HCN subcategory is alkaline chlorination. The Agency is therefore proposing BPT effluent limitations based on alkaline

TABLE 17-10. MODEL PLANT TREATMENT COSTS

Subcategory HYDROGEN CYANIDE

Production 31,800 metric tons per year (35,059 tons per year)
90 metric tons per day (100 tons per day)
Waste water flow 5,100 cubic meters per day.

	LEVEL OF TREATMENT*	
	FIRST	SECOND
A. INVESTMENT COST		
Construction	$65,500	$15,000
Equipment in place, including piping, fittings, electrical work and controls.....	810,500	120,000
Monitoring equipment in place	9,000	
Engineering design and inspection	177,000	27,000
Incidentals, overhead, fees, contingencies	177,000	27,000
Land	3,000	
TOTAL INVESTMENT COST	$1,242,000	$189,000
B. OPERATION AND MAINTENANCE COST		
Labor and supervision ...	84,000	14,000
Energy	9,000	3,100
Chemicals	296,000	97,000
Maintenance	123,900	18,900
Taxes and insurance	37,300	5,700
Residual waste disposal.....		
Monitoring, analysis and reporting	15,000	7,500
TOTAL OPERATION AND MAINTENANCE COST	$565,200	$146,200
C. AMORTIZATION OF INVESTMENT COST	$202,100	$ 30,800
TOTAL ANNUAL COST	$767,300	$177,000

* First level represents the base cost of treatment system.
Other levels represent the incremental cost above base cost.

TABLE 17-11. MODEL PLANT TREATMENT COSTS

Subcategory HYDROGEN CYANIDE

Production	50,900 metric tons per year	(56,117 tons per year)
	145 metric tons per day	(160 tons per day)
Waste water flow	8,200 cubic meters per day.	

	LEVEL OF TREATMENT*	
	FIRST	SECOND
A. INVESTMENT COST		
Construction	$105,000	$ 20,000
Equipment in place, including piping, fittings, electrical work and controls.....	1,246,500	120,000
Monitoring equipment in place	9,000	
Engineering design and inspection	272,100	28,000
Incidentals, overhead, fees, contingencies	272,100	28,000
Land	3,000	
TOTAL INVESTMENT COST	$1,907,700	$196,000
B. OPERATION AND MAINTENANCE COST		
Labor and supervision ...	$ 84,000	$ 14,000
Energy	9,800	3,100
Chemicals	476,000	154,000
Maintenance	190,500	19,600
Taxes and insurance	57,200	6,500
Residual waste disposal.....		
Monitoring, analysis and reporting	15,000	7,500
TOTAL OPERATION AND MAINTENANCE COST	$832,500	$204,700
C. AMORTIZATION OF INVESTMENT COST	$310,400	$ 31,900
TOTAL ANNUAL COST	$1,142,900	$236,600

* First level represents the base cost of treatment system. Other levels represent the incremental cost above base cost.

TABLE 17-12. MODEL PLANT TREATMENT COSTS

Subcategory HYDROGEN CYANIDE

Production	63,600 metric tons per year	(70,119 tons per year)
	181 metric tons per day	(200 tons per day)
Waste water flow	10,300 cubic meters per day.	

	LEVEL OF TREATMENT*	
	FIRST	SECOND
A. INVESTMENT COST		
Construction	$117,000	$40,000
Equipment in place, including piping, fittings, electrical work and controls.....	1,505,000	160,000
Monitoring equipment in place	9,000	
Engineering design and inspection	326,200	40,000
Incidentals, overhead, fees, contingencies	326,200	40,000
Land	3,000	
TOTAL INVESTMENT COST	$2,286,400	$280,000
B. OPERATION AND MAINTENANCE COST		
Labor and supervision ...	$ 84,000	$14,000
Energy	11,500	4,600
Chemicals	592,000	191,000
Maintenance	228,400	28,000
Taxes and insurance	68,600	9,200
Residual waste disposal.....		
Monitoring, analysis and reporting	15,000	7,500
TOTAL OPERATION AND MAINTENANCE COST	$999,500	$254,300
C. AMORTIZATION OF INVESTMENT COST	$372,000	$ 45,700
TOTAL ANNUAL COST	$1,371,500	$300,000

* First level represents the base cost of treatment system. Other levels represent the incremental cost above base cost.

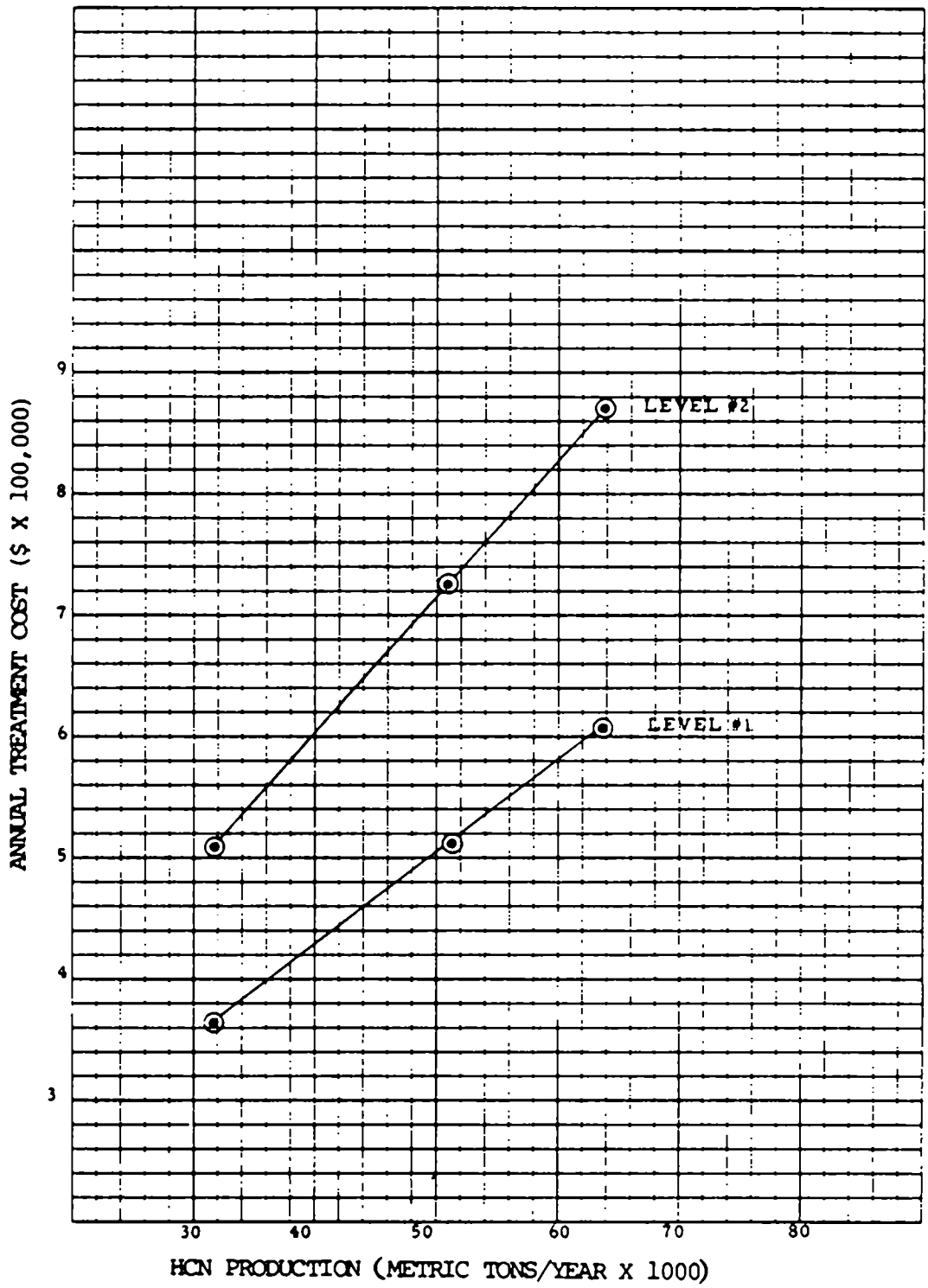

Figure 17-6. Annual treatment cost as a function of production for the Hydrogen Cyanide Subcategory

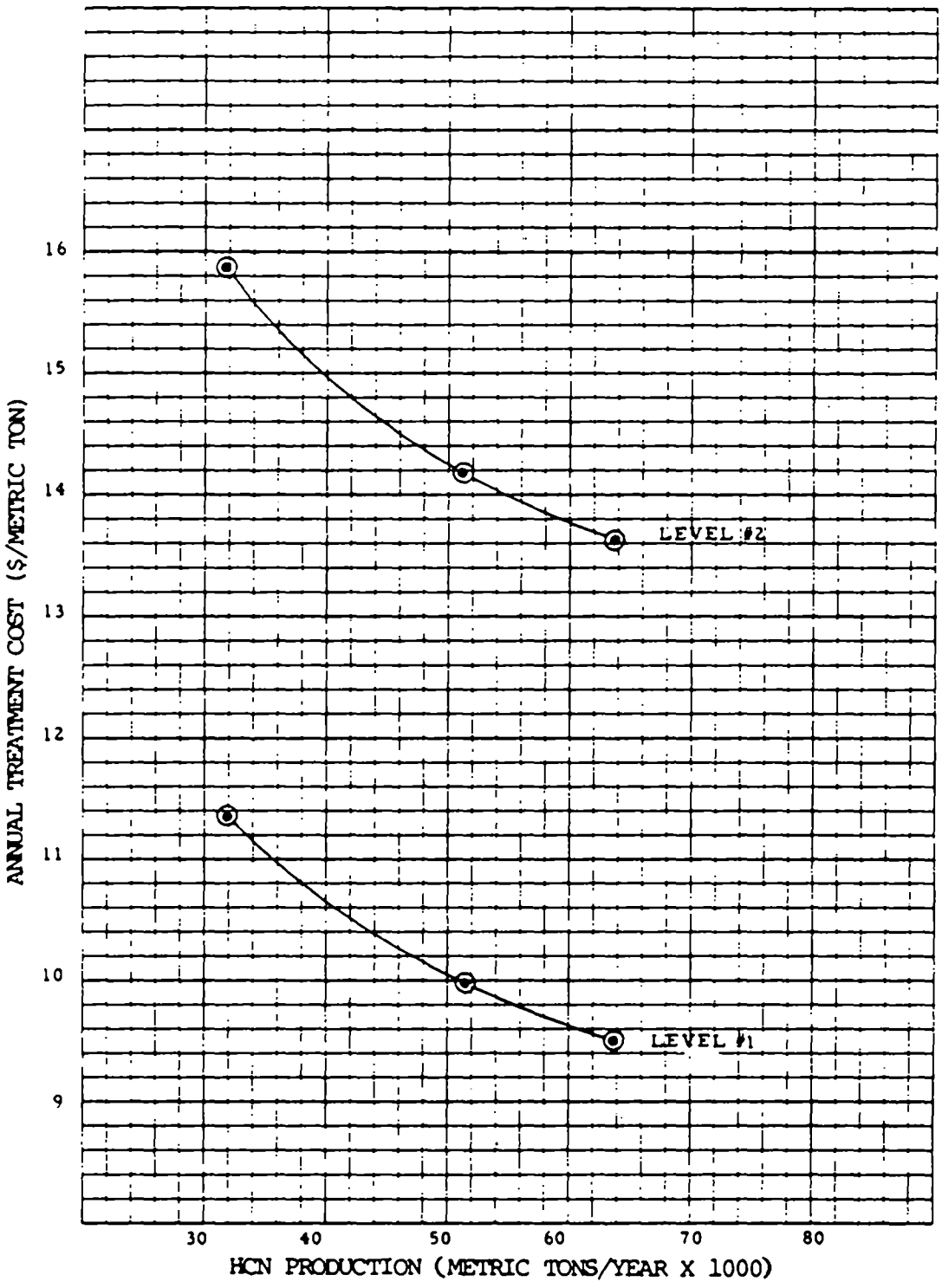

Figure 17-7. Annual unit treatment cost as a function of production for the Hydrogen Cyanide Subcategory

TABLE 17-13. MODEL PLANT TREATMENT COSTS

Subcategory HYDROGEN CYANIDE

			Annual Treatment Costs/Metric ton of Product	
			LEVEL OF TREATMENT	
COST ITEM	PRODUCTION M tons	FLOW (m^3/day)	FIRST	SECOND
Annual Operation and Maintenance	31,800	5,100	17.78	4.60
	50,900	8,200	16.35	4.02
	63,600	10,300	15.72	3.40
Annual Amortization	31,800	5,100	6.35	0.97
	50,900	8,200	6.10	0.63
	63,600	10,300	5.85	0.72
Total Cost	31,800	5,100	24.13	5.57
	50,900	8,200	22.45	4.65
	63,600	10,300	21.57	4.12

chlorination to destroy cyanide amenable to treatment by chlorination, followed by clarification.

Flow Basis

The proposed effluent limitations are based on the high flow (57 m3/kkg of HCN) model; that is no recycle of absorber water. A low flow basis (7 m3/kkg of HCN based on the flow of Plant #782) was rejected as being too energy intensive due to the need for refrigerative cooling of the recycled absorber water. The water going to the model plant treatment system is assumed to consist of process and contact cooling waste effluents, leaks and spills, and storm water run-off. The boiler blowdown and noncontact cooling water (once through or blowdown discharge in case of closed loop) are not included in the flow basis.

Selection of Pollutants to be Regulated

The selection of pollutants on which specific limitations are proposed are based on the evaluation of raw waste composition as determined during the screening and verification programs.

Raw waste pollutant concentrations - Plant #765 was sampled during the screening phase and the presence of toxic pollutants in significant concentrations established the need for verification sampling. Two plants were sampled in the verification phase. Free cyanide, total cyanide, and ammonia were found in the raw waste at concentrations high enough to be treatable (Table 17-9) using available treatment technology options. These were therefore selected for regulation. Chlorine concentrations in the effluent are not affected by BPT treatment technology and therefore no BPT limit is proposed for this parameter. Thallium is best controlled by management practices developed by the permit authority on a case-by-case basis.

Total subcategory raw waste pollutant loading - The average unit loading of the pollutants found in significant amounts were calculated from the raw waste loads of the plant sampled during screening and verification. The unit pollutant load values (Table 17-9) were multiplied by the estimated production rate of 165,500 kkg/year to estimate the total annual production loading rates for the subcategory (Section 17.3.3). The prevalent treatment technologies (alkaline chlorination and biological treatment) are implemented for removal of the regulated pollutants.

Basis of Pollutant Limitations

Conventional and nonconventional parameters -

A. pH: The treated effluent is to be controlled within the pH range of 6.0 to 9.0. This limitation is based on the data presented in Appendix B of this report and the JRB study (52).

B. TSS: The concentration of suspended solids found during sampling of the raw waste water was low. No additional solids are produced in the treatment technology and no provision presently exists in the existing or model treatment systems for the removal of solids. The maximum concentration of 35 mg/l of TSS found in the raw waste during screening and verification sampling (Table 17-9) was taken as the concentration basis for the proposed maximum 30-day average effluent limitation. In the absence of long-term monitoring data for TSS, the variability factor ratio of 2.7 estimated for free cyanide is used to calculate the 24-hour concentration basis and effluent limit.

The proposed total suspended solids (TSS) maximum 30-day average effluent limit is given by:

$$(35\ mg/l)(57\ m3/kkg)\left(\frac{kg/m3}{1000\ mg/l}\right) = 2.0\ kg/kkg$$

The proposed TSS 24-hour maximum concentration is given by:

$$(35\ mg/l)(2.7) = 95\ mg/l$$

The proposed TSS 24-hour maximum effluent limit is given by:

$$(2.0\ kg/kkg)(2.7) = 5.4\ kg/kkg$$

C. Ammonia: Plant #765 conducted a 28-day sampling study of the treated effluent for pollutants which were not monitored on a long-term basis. The Agency is proposing regulation of ammonia in the discharge, based on the 28-day sampling results of Plant #765. Plant #765 uses a proprietary process for the removal of ammonia, however, the same performance can be achieved by steam stripping. The 28-day test data of ammonia in the discharge effluent was reported by Plant #765 on a unit product basis; i.e. kg/kkg. The average ammonia effluent loading of 3.6 kg/kkg (Table 17-14) from the 28-day sampling test is multiplied by the 30-day average variability factor (also determined from the 28-day test data) of 1.2 (Table 17-14) to calculate the 30-day average unit effluent limit. The variability factor of 2.7 (Table 17-14) estimated from the sampling study is used to calculate the proposed 24-hour maximum effluent limit. The corresponding proposed concentration

TABLE 17-14. STATISTICAL ANALYSIS OF THE 28-DAY EFFLUENT SAMPLING RESULTS ON TOTAL CYANIDE AND AMMONIA FROM PLANT #765

	POLLUTANT	
	Total Cyanide	Ammonia-N
Daily Data		
No. of points	25	26
Average Unit Load kg/kkg of HCN	0.192	3.634
Std. Deviation S(1)	0.128	3.312
Std. Deviation S(2)	0.61	0.58
Variability Factor(3)	3.44	3.26
30-Day Average Data		
The Standard error of the mean (A)(4) =	0.023	0.422
Coefficient of variation for the mean (CV)(5)	0.119	0.116
Variability factor(6)	1.19	1.19
Variability Factor Ratio		
V.F.R.(7)	2.9	2.7

(1) S = Arithmetic Standard Deviation

$$= \sqrt{\frac{\Sigma^{n} (X_i - \bar{X})^2}{n-1}}$$

$\bar{X}$ is the mean value

X_i is the data point value

n is the no. of points

(2) S' = is the estimated standard deviation of the logarithm derived from the arithmetic mean, $\bar{X}$, and the arithmetic standard deviation, S, according to the relationship

$$(S')^2 = \ln \left[1.0 + \left(\frac{S}{\bar{X}}\right)^2\right]$$

Continued.

TABLE 17-14 Continued

(3) In case of daily measurements, the variability factor, VF, for a lognormal distribution is found by the expression

$$\ln (VF) = S' (Z - 0.5 S')$$

when the value of Z is 2.33, the variability factor for the 99 percentile is obtained.

(4) Standard error of the mean, $A = \dfrac{\sqrt{\dfrac{\sum (X_i - \bar{X})^2}{n-1}}}{\sqrt{30}}$

$$= \frac{\text{Arithmetic standard deviation}}{\sqrt{30}}$$

(5) Coefficient of variation for the mean $CV = \dfrac{\text{Standard error of the mean}}{\text{Mean Value}}$

$$= \frac{A}{\bar{X}}$$

(6) Variability factor for 30-day average

$$= 1 + Z\ (CV)$$

Where the value of Z is 1.64, the variability factor is for the 95th percentile

CV ⟶ coefficient of variation for the mean

(7) VFR: ratio of the 24-hour variability factor to the 30-day average variability factor

limitations are calculated by using the model plant flow of 57 m3/kkg.

The proposed maximum 30-day average effluent limit for ammonia-N is given by:

$$(3.6\ kg/kkg)(1.2) = 4.3\ kg/kkg$$

The proposed 24-hour maximum effluent limitation is given by:

$$(4.3\ kg/kkg)(2.7) = 12\ kg/kkg$$

The corresponding 30-day average concentration basis is calculated as follows:

$$(4.3\ kg/kkg)(57\ m3/kkg)\left(\frac{kg/m3}{1000\ mg/l}\right) = 75\ mg/l$$

and the 24-hour maximum concentration basis is:

$$(12\ kg/kkg)(57\ m3/kkg)\left(\frac{kg/m3}{1000\ mg/l}\right) = 210\ mg/l$$

<u>Toxic Pollutants</u> - The toxic pollutants proposed for regulation are free cyanide and total cyanide.

A. Free Cyanide: Plant #765 practices alkaline chlorination and has submitted two years of monitoring data on the treated effluent for free cyanide. The samples were properly stabilized before analysis. The variability factors for the daily data and 30-day averages were calculated from the long-term data as shown in Table 17-15. The long-term average concentration of 0.15 mg/l (Table 17-15) was used as the basis for the proposed limitations. The estimated variability factors and model plant flow rate were used in calculating the proposed concentration bases and effluent limitations.

The proposed 30-day average concentration basis for free cyanide is given by:

$$(0.15\ mg/l)(1.8) = 0.27\ mg/l$$

The proposed 24-hour maximum concentration is given by:

$$(0.15\ mg/l)(4.9) = 0.74\ mg/l$$

The proposed maximum 30-day average effluent limitation is calculated by:

TABLE 17-15. STATISTICAL ANALYSIS OF HISTORICAL EFFLUENT MONITORING DATA ON FREE CYANIDE FROM PLANT #765
PERIOD: SEP. 1976 - AUG. 1978

MONITORING FREQUENCY	N No.	$\bar{X}$ Mean (mg/l)	S(1) Std Dev (mg/l)	CV(2) Coeff. of Variation	VF Variability Factor
Daily	585	0.15	0.15	1.0	4.9(3)
30 Day Average	24	0.15	0.076	0.5	1.8(4)

For free cyanide, the long-term monitoring data were screened outlines. In the first place, values recorded as zero were interpreted to mean "inability to measure pollutant" and were rejected prior to the statistical analysis. For the remaining data, the reported measurements of oxidizable CN were screened by the use of the t-statistic

$$t = \max\left((X\max - \bar{X})/s,\ (\bar{X} - X\min)/s \right)$$

for extreme values as outliers. Screening was performed on a month-by-month basis, and any datum with a calculated t value exceeding the 99% confidence limits from the t distribution was concluded to be an outlier. Given rejection of a value, recomputation of statistical measures for that month was performed.

(1) Arithmetic standard deviation, S
where $S^2 = \sum (X-\bar{X})^2/(N-1)$
For 30 day averages, this is the standard error of the mean

(2) $CV = S/\bar{X}$

(3) For daily measurements, VF is calculated by
$\ln (VF) = S' (2.33-5\ 1/2)$
Where $(S')^2 = \ln (1 + (CV)^2)$. S' is the moments estimator of the scale parameter of the lognormal distribution and 2.33 is the Z value corresponding to 99th percentile

(4) For 30-day average data, $VF = (1 + 1.64\ (CV))$
Where 1.64 is the Z value for the 95th percentile.

$$(0.27\ mg/l)(57\ m3/kkg)\left(\frac{kg/m3}{1000\ mg/l}\right) = 0.015\ kg/kkg$$

The proposed 24-hour maximum effluent limitation is given by:

$$(0.74\ mg/l)(57\ m3/kkg)\left(\frac{kg/m3}{1000\ mg/l}\right) = 0.042\ kg/kkg$$

B. Total Cyanide: The variability factors for total cyanide for daily data and 30-day averages were estimated from the 28-day study data conducted by Plant #765 and are given in Table 17-14. The proposed limitations for total cyanide are derived from the average unit effluent load (0.19 kg/kkg given in Table 17-14), variability factors estimated from 28-day test and model plant flow of 57 m3/kkg.

The proposed maximum 30-day average effluent for total cyanide limitation is calculated by:

$$(0.19\ kg/kkg)(1.2) = 0.23\ kg/kkg$$

The proposed total cyanide 24-hour maximum effluent limitation is given by:

$$(0.19\ kg/kkg)(3.4) = 0.65\ kg/kkg$$

The total cyanide maximum average concentration basis is:

$$(0.23\ kg/kkg)(57\ m3/kkg)\left(\frac{kg/m3}{1000\ mg/l}\right) = 4.0\ mg/l$$

The proposed total cyanide 24-hour maximum concentration basis is:

$$(0.65\ kg/kkg)(57\ m3/kkg)\left(\frac{kg/m3}{1000\ mg/l}\right) = 11\ mg/l$$

The proposed effluent limitations for Hydrogen Cyanide produced by the Andrussow Process are summarized in Table 17-16 for toxic, conventional, and nonconventional pollutants.

17.7.3 Basis for Proposed BCT Limitations

The BCT limitation (applicable only to TSS) was set equal to BPT because the dechlorination technology added for BAT does not impact conventional pollutants.

17.7.4 Basis for Proposed BAT Limitations

The Agency considered different advanced level technologies and their cost effectiveness relative to the base

TABLE 17-16. PROPOSED LIMITATIONS

HYDROGEN CYANIDE (ANDRUSSOW PROCESS)

Best Practicable Control Technology Currently Available

Waste Water Flow: 57 m^3/kkg of HCN

Pollutant	Subcategory Performance (mg/l)	VFR(1)	Concentration Basis (mg/l) Max 30-day Avg	Concentration Basis (mg/l) 24-hr Max	Effluent Limit (kg/kkg) Max 30-day Avg	Effluent Limit (kg/kkg) 24-hr
Conventional and Nonconventional						
Pollutants:						
Total Suspended Solids	35(2)	2.7	35	95	2.0	5.4
Ammonia -N(5)	42(4)	2.7	75	210	4.3	12
Toxic Pollutants:						
Free Cyanide(5)	0.15(3)	2.7	0.27	0.74	0.015	0.042
Total Cyanide(5)	3.4(4)	2.8	4.0	11	0.23	0.65

(1) VFR: Ratio of the 24-hour variability factor to the 30-day variability factor.

(2) Maximum effluent concentration from screening and verification sampling data.

(3) Average based on two years of long term monitoring data submitted by Plant #765 (Table 17-14)

(4) Average based on the 28-day comprehensive sampling data submitted by Plant #765 (Table 17-15)

(5) Also applicable for PSES and PSNS limitations

level systems (BPT) for the removal of toxic, conventional, and nonconventional pollutants. For BAT, the Agency is proposing Level 2 technology which includes dechlorination before final discharge.

The Agency also considered break point chlorination for essentially complete destruction of cyanide. However, the operational costs were too high. The reduction of effluent load to the treatment system by recycling the absorber water was also considered and was found to be too energy intensive and too costly. Therefore the only cost effective treatment technology beyond BPT was found to be dechlorination.

Technology Basis

For BAT, the Agency is proposing limitations based on BPT with the addition of dechlorination (Figure 17-5, Level 2). Control of chlorine in the discharge in uniformly inadequate in this industry. Its control in BAT is believed to be appropriate because of its well-documented toxicity to aquatic life. The basis for the chlorine limit is transfer of technology from the electric utility industry (58). This transfer is appropriate because the chlorine in both streams is amenable to the same treatment for removal and removal is not inhibited by the presence of other chemicals in either of the waste streams.

Flow Basis

The BPT effluent discharge rate of 57 m3/kkg of HCN has been used as the basis for the BAT model plant.

Selection of Pollutants to be Regulated

For the BAT regulation, the Agency has selected chlorine in addition to the pollutants identified in BPT.

Basis of Pollutant Limitations

Nonconventional pollutants - The two nonconventional pollutants proposed for regulation are ammonia-N and total residual chlorine. The BAT limitations for ammonia are the same as those proposed for BPT. For total residual chlorine the BAT regulation is based on the chlorine discharge limits for the Steam Electric Generating Point Source Category. The maximum 30-day average in that industry is 0.20 mg/l, for the BPT (58). The same value is proposed for this BAT regulation. The variability factors used for free cyanide (Table 17-15) and the model plant flow of 57 m3/kkg are used to calculate the concentration and unit effluent limitations.

The proposed 24-hour maximum concentration basis is given by multiplying the VFR (4.9/1.8 = 2.7) from Table 17-15 by the maximum 30-day average concentration as follows:

$$(2.7)(0.20 \text{ mg/l}) = 0.54 \text{ mg/l}$$

The proposed maximum 30-day average effluent limitation for total residual chlorine is:

$$(0.20 \text{ mg/l})(57 \text{ m3/kkg}) \left(\frac{\text{kg/m3}}{1000 \text{ mg/l}}\right) = 0.011 \text{ kg/kkg}$$

The proposed 24-hour maximum effluent limitation is given by:

$$(0.54 \text{ mg/l})(57 \text{ m3/kkg}) \left(\frac{\text{kg/m3}}{1000 \text{ mg/l}}\right) = 0.031 \text{ kg/kkg}$$

Toxic Pollutants - The Agency has selected the same limitations for free cyanide and total cyanide as those proposed for BPT because Level 2 technology does not affect either of these pollutant parameters.

The nonconventional and toxic pollutant limitations for BAT are summarized in Table 17-17.

17.7.5 Basis for Proposed New Source Performance Standards

Level 2 treatment technology (also proposed for BAT) was selected as the basis for NSPS limitations. The pollutants to be controlled for NSPS are pH, total suspended solids, total residual chlorine, ammonia-N, free cyanide, and total cyanide. The proposed NSPS limitations are given in Table 17-18.

17.7.6 Basis for Proposed Pretreatment Standards

Existing Sources

The Agency is proposing Pretreatment Standards for Existing Sources (PSES) based on BAT technology excluding dechlorination which consists of alkaline chlorination. Dechlorination is not required because it is common practice for a POTW to treat influents with chlorine. One plant (#765) discharges to a POTW.

The pollutants to be limited are ammonia, free cyanide, and total cyanide as indicated in Table 17-16.

New Sources

For Pretreatment Standards for New Sources (PSES), the Agency is proposing limitations based on NSPS. The pollutants to be regulated are ammonia, free cyanide, and total cyanide as summarized in Table 17-16.

TABLE 17-17. PROPOSED LIMITATIONS
HYDROGEN CYANIDE (ANDRUSSOW PROCESS)
Best Available Technology
Waste Water Flow: 57 m^3/kkg of HCN

Pollutant	Subcategory Performance	VFR(1)	Concentration Basis, (mg/l) Max 30-day Avg	24-hr Max	Effluent Limit (kg/kkg of HCN) Max 30-day Avg	24-hr Max
Nonconventional Pollutants:						
Ammonia-N	42(2)	2.7	75	210	4.3	12
Total Residual Chlorine	0.20(3)	2.7	0.20	0.54	0.011	0.031
Toxic Pollutants:						
Free Cyanide	0.15(4)	2.7	0.27	0.74	0.015	0.042
Total Cyanide	3.4(2)	2.8	4.0	11	0.23	0.65

(1) VFR: Ratio of the 24-hour variability factor to the 30-day variability factor.

(2) Average based on 28-day comprehensive sampling data of treated effluent submitted by Plant #765 (Table 17-15).

(3) Regulation is based on the chlorine discharge limits in the utility industry.

(4) Average based on two years of long-term monitoring data submitted by Plant #765 (Table 17-14).

TABLE 17-18. CONTROL PARAMETER LIMITATIONS
HYDROGEN CYANIDE (ANDRUSSOW PROCESS)
NEW SOURCE PERFORMANCE STANDARDS
WASTE WATER FLOW: 57 m^3/kkg

Pollutant	Treatability (mg/l)	Concentration Basis (mg/l) VFR(1)	Max 30-day Avg	24-hr Max	Effluent Limit (kg/kkg of HCN) Max 30-day Avg	24-hr Max
Conventional and Nonconventional Pollutants:						
Total Suspended Solids, TSS	35	2.7	35	95	2.0	5.4
Total Residual Chlorine	0.2	2.7	0.2	0.54	0.011	0.031
Ammonia - N	42	2.7	76	210	4.3	12
Toxic Pollutants:						
Free Cyanide	0.15	2.7	0.27	0.74	0.015	0.042
Total Cyanide	3.4	2.8	4.0	11	0.23	0.65

(1) VFR: Ratio of the 24-hour variability factor to the 30-day variability factor.

SECTION 18

SODIUM DICHROMATE INDUSTRY

18.1 INDUSTRY PROFILE

18.1.1 General Description

Most of the sodium dichromate produced is used in the chromic acid and pigment industries. It is used for leather tanning, and metal treatment as well as a corrosion inhibitor.

The industry profile data for this subcategory are given in Table 18-1, and the status of regulations is given in Table 18-2.

18.1.2 General Process Description and Raw Materials

The starting materials for the preparation of sodium dichromate are chromite ore, limestone and soda ash. When the above materials are reacted, sodium chromate is formed which is reacted with sulfuric acid to produce sodium dichromate. The reactions are given as:

$$4FeCr2O4 + 8Na2CO3 + 7O2 = 8Na2CrO4 + 2Fe2O3 + 8CO2 \quad (1)$$

$$2Na2CrO4 + H2SO4 = Na2Cr2O7 = H_2O + Na2SO4 \quad (2)$$

Chromite ore is a chromium iron oxide containing ferrous chromite (FeCr2O4 or FeOCr2O3). Small amounts of aluminum, silica and magnesia are present. For the preparation of sodium chromate and finally, sodium dichromate, high grade chromite ores are used containing approximately 50 percent Cr2O3. These ores are imported from South Africa.

At the plant site, the ore is ground to a fine powder, mixed with soda ash and calcined in rotary kilns at 1100 to 1150 degrees C. The reacted product is leached with hot water in a leachate tank. The thickener underflow is filtered and the filtrate recycled to the leachate tank or thickener. The solid filter cake is dried in rotary kilns. The aluminum present in

TABLE 18-1 - SUBCATEGORY PROFILE DATA SUMMARY

SUBCATEGORY	SODIUM DICHROMATE
Total subcategory capacity rate	140,000 kkg/year
Total subcategory production rate	136,500 kkg/year
Number of plants in this subcategory	3
308 Data on file for	3
With total capacity of	NA
With total production of	112,000 kkg/year
Representing capacity	NA
Representing production	82 percent
Plant production range:	
Minimum	20,700 kkg/year
Maximum	66,800 kkg/year
Average production	37,300 kkg/year
Median production	24,800 kkg/year
Average capacity utilization	77 percent
Plant age range:	
Minimum	7 years
Maximum	28 years
Waste water flow range:	
Minimum	455 cubic meters/day
Maximum	720 cubic meters/day
Volume per unit product:	
Minimum	4 cubic meters/kkg
Maximum	8 cubic meters/kkg

Sources of data are Stanford Research Institute, Directory of Chemical Producers, U.S.A., 1977, U.S. Department of Commerce, Current Industrial Reports, December 1977; Energy and Environmental Analysis, Inc.; Draft Report, "Preliminary Economic Assessment of Effluent Limitations in the Inorganic Chemical Industry," June, 1978 and "Economic Analysis of Proposed Revised Effluent Guidelines and Standards for the Inorganic Chemicals Industry," March, 1980.

NA = Not Available

TABLE 18-2 - STATUS OF REGULATIONS - EFFLUENT LIMITATION GUIDELINES

SUBCATEGORY Sodium Dichromate

SUBPART Q (40 CFR 415.170, 3/12/74)

		STANDARDS					
		BPCTCA		BATEA*		NSPS	
Product Process	Parameters	Max.[1] kg/kkg (mg/l)	Avg.[2] kg/kkg (mg/l)	Max. kg/kkg (mg/l)	Avg. kg/kkg (mg/l)	Max. kg/kkg (mg/l)	Avg. kg/kkg (mg/l)
$Na_2Cr_2O_7$	TSS	0.44 (52)	0.22 (26)	No discharge of pwwp[3]		0.30	0.15
	Cr^{+6}	0.009[4] (0.11)	0.0005 (0.060)	No discharge of pwwp		0.009[4]	0.0005
	Cr(T)	0.0088 (1.0)	0.0044 (0.50)	No discharge of pwwp		0.0088	0.0044

* Section 415.173 was remanded and is presently reserved (41 FR 51601, November 23, 1976).

[1] Max. = Maximum of any one day.

[2] Avg. = Maximum average of daily values for thirty consecutive days.

[3] pwwp = Process wastewater pollutants.

[4] The published value in 40 CFR 415.172 and 415.175 is incorrect and should be 0.0009 kg/kkg.

the thickener overflow is hydrolyzed and removed from the chromate solution as precipitated aluminum hydrate in slurry form. The solution is centrifuged and the centrate is evaporated, to give a concentrated solution of sodium chromate, which is reacted with sulfuric acid to give sodium dichromate and sodium sulfate. Sodium sulfate crystallizes as anhydrous sodium sulfate from the boiling solution, and the crystals are removed by filtration. The filtrate is concentrated in multiple effect evaporators. The residual sodium sulfates separate out as solids from each of the evaporators while the hot concentrated solution of sodium dichromate from the last effect of the evaporator is fed to a water-cooled crystallizer. Sodium dichromate crystallizes out and is centrifuged. The centrate, or mother liquor, is returned to the evaporator. The sodium dichromate crystals separated in the centrifuge are dried in a rotary drum dryer and then packaged for sale or stored for use. Figure 18-1 presents a generalized flow diagram for the production of sodium dichromate.

18.2 WATER USE AND WASTE SOURCE CHARACTERISTICS

18.2.1 Water Use

Water is used for noncontact cooling, in leaching, for scrubbing vent gases and for process steam for heating. Water use information provided in 308 Questionnaires is given in Table 18-3. It is possible that the figures given in the 308 Questionnaires may be the amount going to each unit operation and not the amount added as makeup water. The quantities seem unusually high for an industry practicing extensive recycling of water, as this one does.

18.2.2 Waste Sources

Spent Ore

The unreacted ore is removed from the process as a sludge. The solids contain chromium and other impurities originally present in the ore. The waste is disposed as a solid waste in a suitable landfill or is slurried with water and sent to the treatment facility.

Noncontact Cooling Water and Cooling Tower Blowdown

The noncontact cooling water is either used on a once-through basis and discharged or is recycled and the blowdown discharged to the treatment facility. In addition to dissolved sulfate and chloride, it may contain chromates.

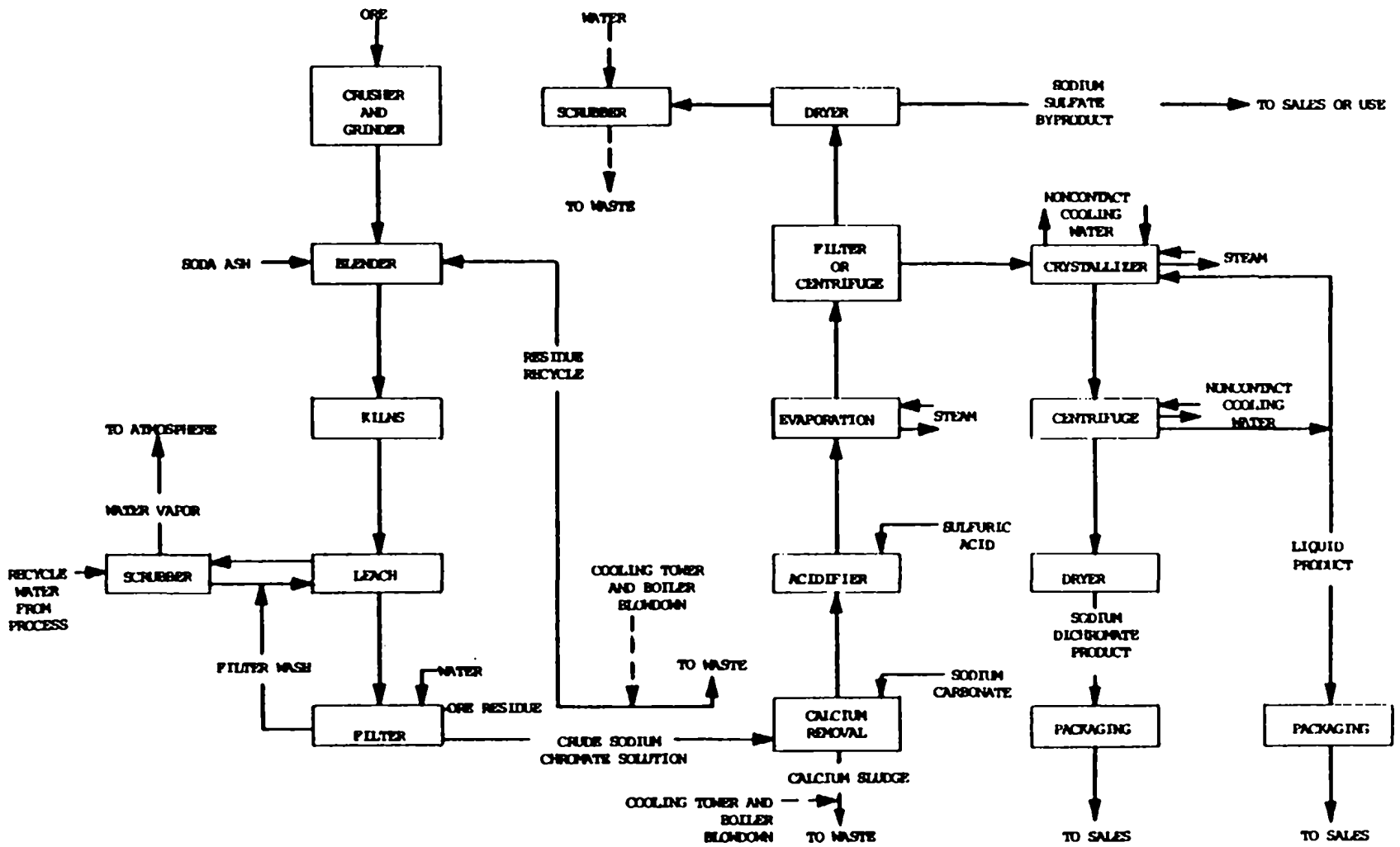

Figure 18-1. General process diagram for production of sodium dichromate.

TABLE 18-3. WATER USAGE IN SODIUM DICHROMATE SUBCATEGORY

Source	Water usage at plants, (m^3/kkg of $Na_2Cr_2O_7$)		
	Plant #398	Plant #376[3]	Plant #493
Noncontact cooling	277	11.39	5.7
Noncontact ancillary uses	0.5	NA	3.12
Direct process contact[1]	5.7[2]	7.83[4]	2.85
Indirect process contact (pumps, seals, leaks and spills)	0.9[2]	4.16	0.2
Maintenance, e.g. cleaning and work area washdown	0.5[2]		0.2
Air pollution control	2.5[2]	NA	1.0
Total contact waste water influent to treatment	9.6[2]	11.59	4.25

NA = Not Available

(1) Up to 50 percent solids

(2) Total recovery and recycle is practiced at this plant.

(3) Plant is no longer in operation.

(4) Due to a high evaporation rate, there is no discharge from the primary pond during 9 to 10 months of the year. There was no primary pond effluent at the time of sampling and only 4.16 m^3/kkg of the indirect contact sources were being treated and discharged.

Boiler Blowdown

The steam used for heating is recovered as condensate, while the boiler blowdown is discharged to the treatment facility. It may become contaminated with chromium escaping from the process area and hence should be sent to the waste water treatment facility for treatment.

The majority of aqueous streams resulting from the manufacture of sodium dichromate are recycled. Streams recycled include condensates from product evaporation and drying; product recovery filtrates; air pollution control scrubber effluents from product drying, leaching and roasting kilns; filter wash waters; and equipment and process area washdowns. At two plants the waste water, consisting of boiler and noncontact cooling tower, is used to slurry the spent ore residue to the waste water treatment facility. At one plant, the only waste water resulting from process operations is the noncontact cooling water, which is used on a once-through basis.

18.3 DESCRIPTION OF PLANTS VISITED AND SAMPLED

18.3.1 Screening

Three sodium dichromate plants were visited and the waste water streams sampled. Plant #493 was sampled in the screening phase and Plants #376 and #398 were sampled in the verification phase.

At Plant #493, the waste water going to the treatment facility includes the boiler and cooling tower blowdown and a small volume of effluent from a scrubber on a by-product sodium sulfate operation. The total waste includes the spent ore residue, which is also sent to the treatment facility. At the treatment facility, the alkaline waste waters are reacted with imported acidic industrial waste (pickle liquor containing ferrous iron) at an elevated temperature in a reactor. The chromium is reduced and precipitated during the reaction. The reacted waste is sent to clarifiers via holding tanks. In the clarifiers, large quantities of water are used to wash the precipitated solids in a countercurrent fashion. The final clarifier overflow, which is the treated effluent, is filtered and discharged and the clarifier underflow is disposed of in a quarry. Figure 18-2 is a block diagram of the treatment process and indicates which streams were sampled. Table 18-4 gives the flow data and pollutant emissions of the streams sampled.

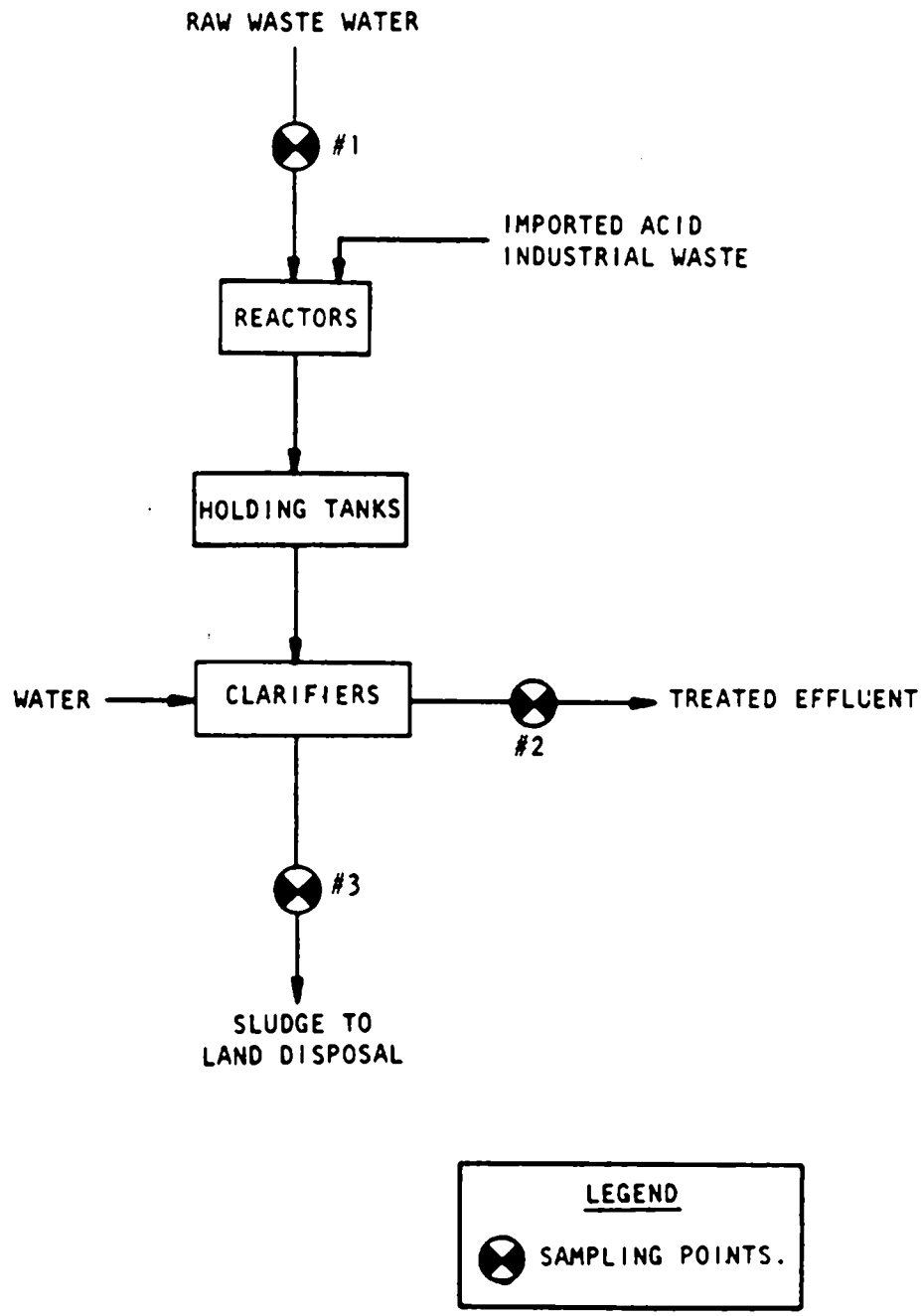

Figure 18-2. General waste water treatment process flow diagram at Plant #493 showing the sampling points. (Sodium dichromate manufacture).

TABLE 18-4. FLOW AND POLLUTANT CONCENTRATION DATA OF THE SAMPLED WASTE STREAMS FOR PLANT #493 PRODUCING SODIUM DICHROMATE

Stream No.	Waste Stream Discription	Unit Flow (m^3/kkg of $Na_2Cr_2O_7$)	TSS Load (kg/kkg of $Na_2Cr_2O_7$)	Cr^{+6} Load (kg/kkg of $Na_2Cr_2O_7$)	Chromium Load (kg/kkg of $Na_2Cr_2O_7$)
1	Raw Waste Water	4.25	183	3.5	3.30
2	Treated Effluent	28.91*	0.018	0.0001	0.072

* This value includes the flow from the sodium dichromate plant, imported acid used for neutralization, and the water used for washing the solids.

18.3.2. Verification

At Plant #376, sodium sulfide is used for simultaneous chromate reduction and precipitation. The waste waters at this plant are segregated into two streams. One stream consists of the cooling tower and boiler blowdown and is used for slurrying the spent ore residue to the treatment facility. The second waste stream consists of stormwater runoff from both the solids disposal areas and the production areas. The first waste water stream is mixed with sodium sulfide during transportation and sent to a diked containment and settling pond system. The sulfide reduces the hexavalent chromium to trivalent chromium, which in turn is precipitated as chromium hydroxide. The solids are settled in the pond, and the overflow from the ponds is mixed with the second waste stream and reacted with sufficient alkaline sodium sulfide to reduce the chromate and precipitate chromium hydroxide. The reacted solution is sent to a settling pond where the suspended solids are settled and the overflow discharged. A simplified flow diagram of the waste water treatment process is given in Figure 18-3. Table 18-5 gives the flow data and pollutant emissions for the streams sampled.

Plant #376 has recently discontinued its production of sodium dichromate. At the time of sampling, the data obtained from this plant was considered a valid part of the data base for assessing the pollution potential of the industry and evaluating viable treatment options. The chromate reduction technology being used was evidently subject to periodic problems associated with the hazard of H2S gas production. This has been confirmed in treatability studies currently being conducted by the Agency. With proper operation of the treatment system this problem can be avoided.

At Plant #398, the only effluent produced is the noncontact cooling water. The noncontact cooling water is used on a once-through basis and is discharged without treatment through two outfalls. The solid waste residuals from the leaching process are trucked to a state-licensed hazardous waste landfill area. The amount of solid waste residue disposed of is approximately 290 kg/kkg of product. Table 18-6 gives the unit flow data and pollutant emissions for the process effluent.

18.3.3 Toxic Pollutant Concentrations and Loadings

Toxic pollutants detected in the raw wastes during sampling were as follows:

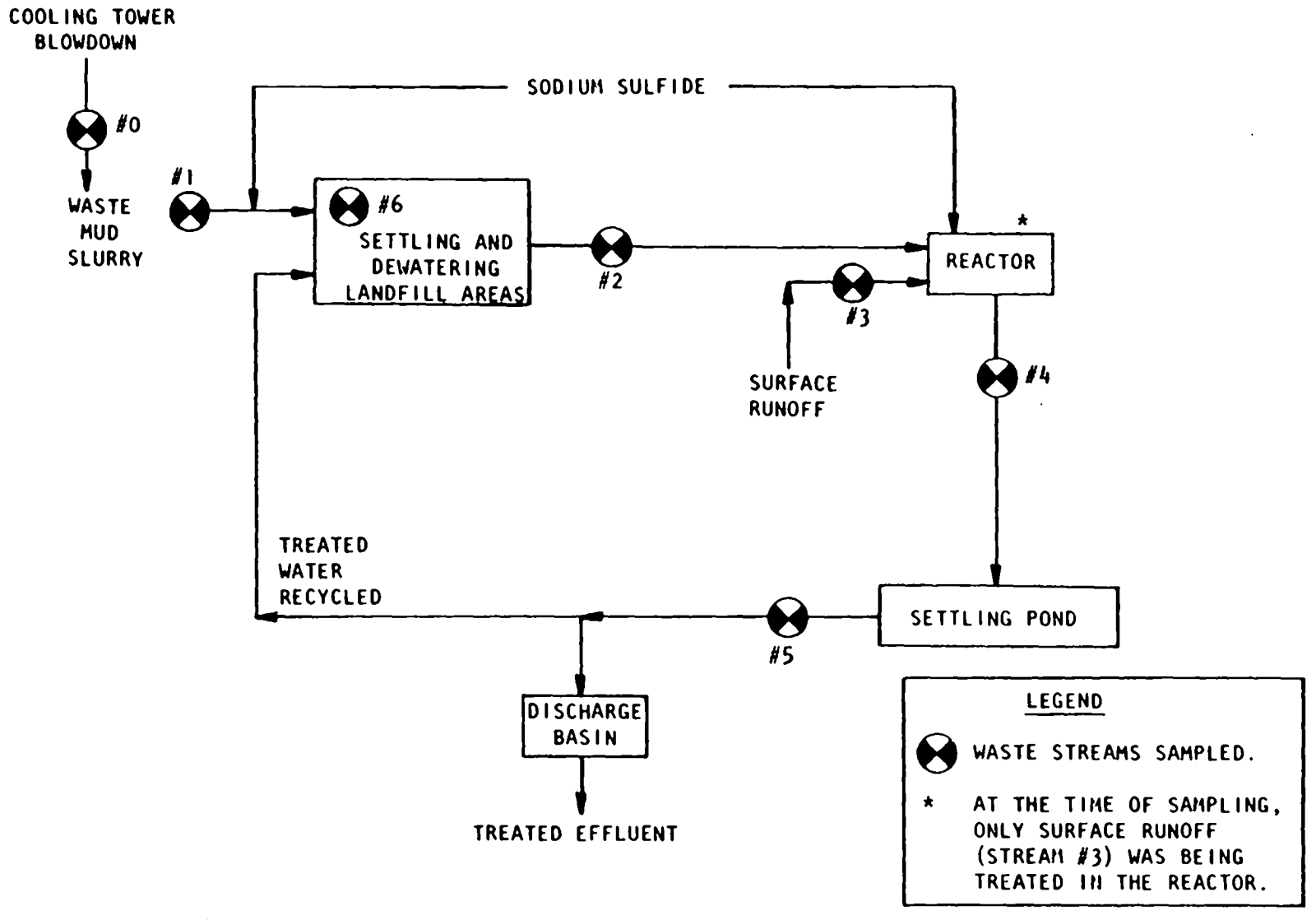

Figure 18-3. General waste water treatment process flow diagram at Plant #376 showing the sampling points. (Sodium dichromate manufacture)

TABLE 18-5. FLOW AND POLLUTANT LOADING DATA OF THE SAMPLED WASTE STREAMS FOR PLANT #376 PRODUCING SODIUM DICHROMATE

Stream No.	Waste Stream	Unit Flow (m^3/kkg of $Na_2Cr_2O_7$)	Average Observed Loadings: TSS Load (kg/kkg of $Na_2Cr_2O_7$)	Cr^{+6} Load (kg/kkg of $Na_2Cr_2O_7$)	Chromium Load (kg/kkg of $Na_2Cr_2O_7$)
1	Mud Slurry Waste	7.85	3988	0.407	1.041
2	Primary Pond* Effluent	NA	0.591	NA	0.808
3	Surface Runoff	4.16	0.621	0.057	0.55
4	Reactor Effluent		7.942	NA	0.77
5	Pond Effluent		0.046	< 0.00004	0.0034

* Due to a high evaporation rate, there is normally no discharge from the primary pond for 9 or 10 months of the year.

NA = Not available

TABLE 18-6. FLOW AND POLLUTANT LOADING DATA OF THE SAMPLED WASTE STREAMS FOR PLANT #398 PRODUCING SODIUM DICHROMATE

Stream No.	Waste Stream Description	Unit Flow	Average Observed Loadings		
			TSS Load	Cr^{+6} Load	Chromium Load
		(m^3/kkg of $Na_2Cr_2O_7$)	(kg/kkg of $Na_2Cr_2O_7$)	(kg/kkg of $Na_2Cr_2O_7$)	(kg/kkg of $Na_2Cr_2O_7$)
1	Noncontact cooling water	71	0.426	NNI*	NNI*
2	Noncontact cooling water	206	0.55	NNI*	NNI*

* NNI= No net increase of the pollutant load, compared to the intake source.

Maximum Concentrations Observed (ug/l)

Pollutants	Screening	Verification (2 Plants)
Chromium (Total)	250,000	310,000
Chromium (Hexavalent)	---	150,000
Nickel	13,000	1,300
Zinc	580	1,200
Copper	35	240
Lead	9	24
Silver	<0.5	230*
Arsenic	<10	<5
Selenium	< 5	140**

* Found at one plant only
** Noncontact cooling water at one plant only

Individual plant average raw waste loads per unit product found in sampling can be found in Table 18-7. A summary of daily and unit product raw waste loads for all plants sampled can be found in Table 18-8.

Based on the total annual production of this subcategory and the average waste load generated per unit product, the estimated total pollutant raw waste loads generated each year for this subcategory are as follows:

Total Subcategory Raw Waste Load Generation

Pollutant	Waste Load (kg/year)
Chromium (Total)	290,000
Cr (Hexavalent)	210,000
Nickel	3,700
Zinc	330
Copper	55
Silver	20
Lead	< 8.2
Selenium	4
Arsenic	< 5

18.4 POLLUTION ABATEMENT OPTIONS

18.4.1 Toxic Pollutants of Concern

The most significant toxic pollutants found are the primary pollutant, chromium, and the common heavy metals often present

TABLE 18-7. TOXIC POLLUTANT RAW WASTE DATA

SUBCATEGORY SODIUM DICHROMATE

POLLUTANT	AVERAGE RAW WASTE INFLUENT			
	PLANT #493		PLANT #376	
	(mg/l)	(kg/kkg)	(mg/l)	(kg/kkg)
Chromium, Cr	250.0	0.94	420.0	3.30
Copper, Cu	0.035	0.00013	0.085	0.00067
Lead, Pb	0.009	0.00003	0.011	0.00009
Nickel, Ni	1.25	0.0047	0.64	0.0050
Zinc, Zn	0.580	0.0022	0.318	0.0025
Silver, Ag	< 0.005	< 0.00002	0.036	0.00028
Selenium, Se	< 0.005	< 0.00002	< 0.005	< 0.00004
Arsenic, As	< 0.010	< 0.00004	< 0.005	< 0.00004

TABLE 18-8. SUMMARY OF RAW WASTE LOADINGS FOUND IN SCREENING AND VERIFICATION SAMPLING

SUBCATEGORY	SODIUM DICHROMATE			
Pollutant	Unit Loading, (kg/kkg)			
	Minimum	Average	Maximum	No. of Plants
Toxic				
Chromium, total	0.94	2.12	3.30	2
Chromium, Hexavalent	0.47	1.6	2.6	3
Copper	0.00013	0.0004	0.00067	2
Nickel	0.0047	0.027	0.050	2
Silver	0.00002	0.00015	0.00028	2
Zinc	0.0022	0.0024	0.0025	2
Selenium	*	< 0.00003	*	2
Arsenic	*	< 0.00004	*	2
Conventional				
TSS	140	2100	4000	2

* Concentrations were at or below the detection limits

as impurities in the chromium ore, notably zinc and nickel. In controlling these metals by the processes chosen for the treatment models, incidental removal of other trace toxic metals may also occur.

The existing BPT regulations control pH, TSS, and chromium (Table 18-2). Effluent limitations on nickel and zinc are being added under the proposed BAT-based regulations. Although copper, silver, selenium, lead, and arsenic were detected in trace quantities (Section 18.3.3 and Tables 18-7 and 18-8), these five toxic pollutants did not occur at treatable concentrations and, therefore, no regulations on them are being proposed.

18.4.2 Process Modifications and Technology Transfer Options

Appropriate process modifications can be made where opportunities exist for recycle of chrome-bearing waste waters for recovery and reuse in the process or for use in other product manufacturing operations. Plant #398 currently practices extensive recovery of chromium values for use in other processes and has no discharge of direct process contact waste waters.

18.4.3 Best Management Practices

Extensive recycle and reuse of process contact waste water limit effluent generation at sodium dichromate plants. At two facilities, cooling water blowdown streams are used to slurry spent ore residues and the resultant waste stream is treated for the removal of chromium prior to discharge. At the remaining plant, ore residues are removed as a solid waste and only once through noncontact cooling water is discharged.

18.4.4 Prevailing Control and Treatment Practices

At the time of verification sampling, Plant #376 was using alkaline sodium sulfide (or bisulfide) for the reduction of hexavalent chromium, followed by precipitation of metal sulfides and hydroxides. Problems experienced by the plant included intermittent, low level H_2S gas generation and incomplete reduction of the chromates. These problems were mitigated by the physical layout of the treatment system and lagoons and the long retention time afforded by the evaporation ponds during most of the year. This plant, however, is no longer in operation.

At present, Plant #493 is the only plant in the industry which has a process contact waste water discharge. The treatment technology employed is the reduction of chromate wastes with an acidic ferrous iron solution (waste pickle liquor), followed by lime addition for metal hydroxide

precipitation, settling, and filtration. Overall, this technology is roughly equivalent to the sulfide reduction/alkaline precipitation technique previously used by Plant #376 and has the advantage of not risking operator exposure to hydrogen sulfide gas.

18.4.5 Advanced Treatment Technologies

In addition to the chromate reduction and metal removal techniques practiced in the sodium dichromate industry, consideration was given to other advanced treatment technologies considered to be equal to or better than the proposed BAT. These technologies include:

The use of sulfur dioxide for chromite reduction.

Ferrite coprecipitation i.e., the addition of ferrous iron (e.g., waste pickle liquor) and aeration at about pH 5-6 for both chromate reduction and metals precipitation.

Ion exchange systems.

Xanthate precipitation.

These options are not considered viable at this time because there is not sufficient information on performance and cost effectiveness.

18.5 SELECTION OF APPROPRIATE TECHNOLOGY AND EQUIPMENT

18.5.1 Technology for Different Treatment Levels

Alkaline precipitation or reaction with sulfide will separate nickel and zinc from solution. Hexavalent chromium must be reduced to its trivalent form before it can be precipitated as the hydroxide. Although ion exchange or xanthates can remove metals from clarified solutions they are inappropriate for treating raw waste slurries from this industry.

Level 1 (BPT)

The system utilizes sodium bisulfide added to the raw wastes to reduce hexavalent chromium to its trivalent form and partially to precipitate some of the metals as metallic sulfides, along with inert ore solids in a first-stage lagoon. The lagoon effluent is then subjected to alkaline precipitation of trivalent chromium, followed by solids separation in a clarifier and by pH adjustment of the overflow before discharge.

Other reducing agents may be utilized instead of sodium bisulfide for the reduction of hexavalent chromium such as ferrous iron or sulfur dioxide. Using either of these reagents, chromate reduction under acid conditions would be followed by pH adjustment with lime or caustic to obtain alkaline precipitation of the metal hydroxides. This would obviate the need for bisulfide addition for metal precipitation and avoid the potential risk of operator exposure to hydrogen sulfide gas. This level of treatment was selected as a basis for BPT because it was typical of industry practice at the time. The flow diagram for the sulfide-based option for Level 1 is shown in Figure 18-4.

Level 2 (BAT)

Dual media filtration is added to achieve a higher level of suspended solids removal, including metallic hydroxides and sulfides which may have passed through the clarifier. The effluent is adjusted to a pH range of 6 to 9 as in Level 1. These technologies are uniquely appropriate for wastes of the sodium dichromate industry because the sodium bisulfide pretreatment performs the dual function of converting hexavalent chromium to a potentially settleable form, as well as reacting with other heavy metals to form insoluble metallic sulfides. Level 2 was selected as a viable BAT treatment basis because it was being practiced by one plant in the industry and it provides a cost effective method of removing additional quantities of toxic metals from the waste water with negligible impact on solid waste handling and disposal requirements. The flow diagram for the sulfide-based option for Level 2 is shown in Figure 18-5.

Equipment Functions

The raw waste flows into an equalizing lagoon where the influent flows are measured by a magnetic flow meter which controls application of sodium bisulfide solution into the influent pipeline. Hexavalent chromium is converted to the less toxic trivalent form and together with trace metal sulfides and inert solids passes to the first-stage lagoon. A second application of sodium bisulfide is made in the lagoon outflow, and lime is added to precipitate trivalent chromium and residual trace metals prior to clarification. In Level 1 the clarifier effluent is adjusted to pH 6 to 9 and released. In the Level 2 system a dual media filter is added to remove additional suspended material from the overflow. Clarifier underflow and filter backwash are returned to the equalizing lagoon influent, to be settled in the lagoon.

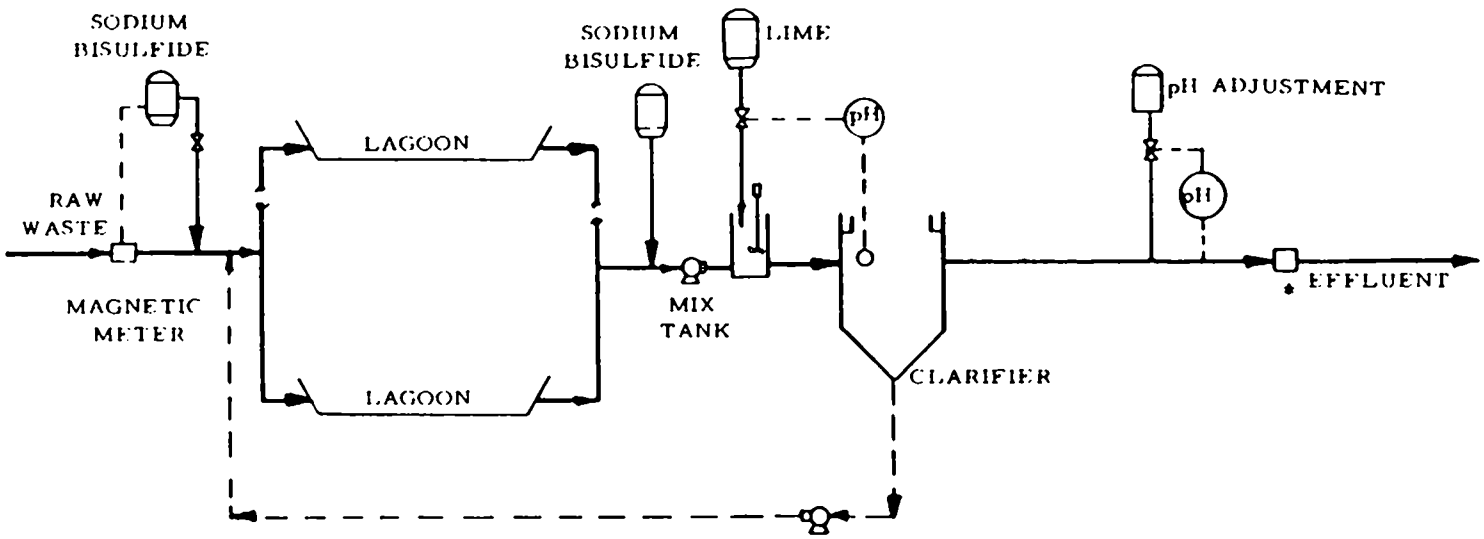

*Includes flow monitoring, pH monitoring and sampler.

Figure 18-4. Level 1 waste water treatment for sodium dichromate subcategory.

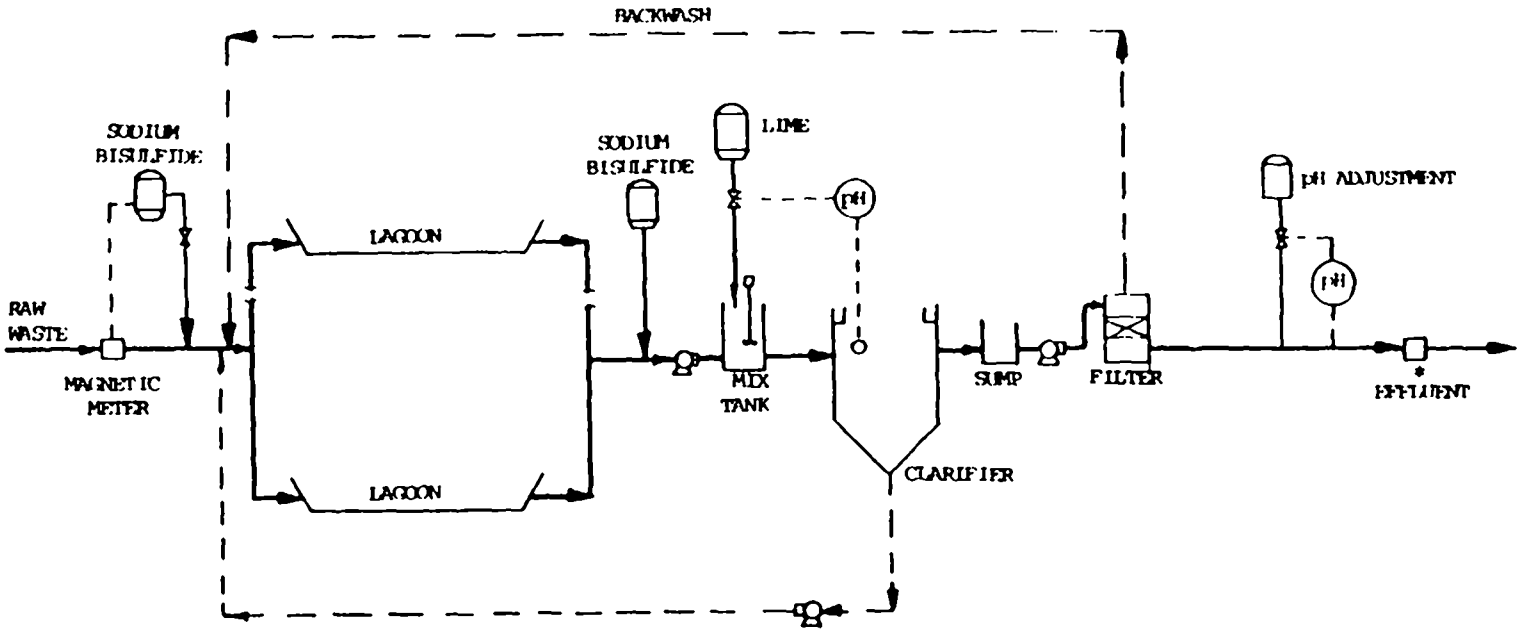

*Includes flow monitoring, pH monitoring and sampler.

Figure 18-5. Level 2 waste water treatment for sodium dichromate subcategory.

Chemicals and Handling

Sodium bisulfide, lime, and hydrochloric acid can be used in the treatment process. When used, the first application of sodium bisulfide is made into the influent pipeline in proportion to flow, minimizing the release of hydrogen sulfide at times when the influent pH may be low. The second application of sodium bisulfide is also into a closed pipeline to ensure adequate mixing with the settled lagoon effluent. Lime slurry is fed through conventional equipment ahead of the clarifier. Hydrochloric acid is used (instead of sulfuric acid) to minimize the formation of gypsum scale which could result from heavy use of lime followed by sulfuric acid. The only unusual hazard involved in the handling of chemicals for the proposed treatment, is some hydrogen sulfide generation. This may be unavoidable even under carefully controlled conditions. Because of the high toxicity of this gas, all appropriate measures to protect workers must be taken, and consideration of alternative reduction methods given.

Separation and Disposal of Solids

As a basis for estimating model plant costs, influent suspended solids, metallic hydroxide and sulfide precipitates, and filter backwash are returned to or left in the influent lagoon(s). As each lagoon becomes filled with solids it is replaced by another, on a ten-year cycle. Liquid is decanted from each filled lagoon and the solid material must be periodically removed to a chemical landfill.

Monitoring Requirements

Internal process monitoring should include both routine testing to maintain reducing conditions and a pH above 7 in the influent lagoons, and simple field determination of pH to assure that the optimum level is reached for precipitation of chromic hydroxide. Routine testing of the effluent should also be performed at the site to show that hexavalent chromium is being consistently reduced to trivalent chromium and that total chromium in the final effluent does not exceed the allowable limit. Periodic composite effluent samples should be analyzed for total chromium by the atomic absorption method, for official reporting purposes.

18.6 TREATMENT COST ESTIMATES

18.6.1 General Discussion

Model plant specifications were selected for the purpose of cost estimation. The rationale for the selection of model plant characteristics is as follows:

Production

At the time of sampling, five industrial plants produced sodium dichromate at a total production rate of approximately 140,000 kkg/year. Two of these plants have discontinued production. Production and waste water flow data, from which model plant characteristics are derived, are on file for three plants which produce a total of 112,000 kkg/year, or approximately 80 percent of the United States production. For waste water treatment cost estimates, three production levels were selected. These are 20,000 kkg/year, 50,000 kkg/year and 70,000 kkg/year.

Waste Water Flow

Unit waste flows for three plants either treating or recycling their waste waters are approximately 9.6, 11.59, and 4.25 m3/kkg of product. For the model plant, 8.5 m3/kkg of sodium dichromate was used as the waste water flow.

Pollutant Loading

For the model plant, it is assumed that the spent ore residues are slurried and transported to the treatment facility, since this is the prevalent practice at two plants. The spent ore waste-generated residue at Plant #969 is 290 kg/kkg of Na2Cr207. The hexavalent chromium loading in the waste water varies from 0.5 to 14 kg/kkg of Na2Cr207. Pollutant loadings used for the model plants are suspended solids (spent ore residue) at 290 kg/kkg Na2Cr207 produced, and hexavalent chromium at 5 kg/kkg.

Chemicals Required

To reduce Cr+6 to Cr+3, a sodium bisulfide dosage of 168 mg/l is needed, but to allow for reaction with other metals, a model dosage of 200 mg/l was used. This is equivalent to 1.7 kg/kkg of product in a unit flow of 8.5 m3/kkg. To raise the pH to 9.5, 100 mg/l of lime is needed, equivalent to 0.7 kg/kkg of product. For final neutralization, HCl is used in the amount of 10 percent of the lime dosage.

Solids Generated

Total dry solids produced from treatment are 260 kg/kkg of sodium dichromate.

18.6.2 Model Plant Control Costs

The cost estimates of three models having different production levels are presented in Tables 18-9, 18-10, and 18-11. Annual treatment costs as a function of production are

TABLE 18-9 . MODEL PLANT TREATMENT COSTS

Subcategory SODIUM DICHROMATE

Production	20,000 metric tons per year	(22,050 tons per year)
	57 metric tons per day	(63 tons per day)
Waste water flow	400 cubic meters per day.	

	LEVEL OF TREATMENT*	
	FIRST	SECOND
A. INVESTMENT COST		
Construction	$615,250	$4,700
Equipment in place, including piping, fittings, electrical work and controls.....	168,500	33,200
Monitoring equipment in place.....	9,000	
Engineering design and inspection.....	158,550	7,580
Incidentals, overhead, fees, contingencies...	158,550	7,580
Land.....	156,000	
TOTAL INVESTMENT COST	$1,265,850	$53,060
B. OPERATION AND MAINTENANCE COST		
Labor and supervision.	$56,000	$14,000
Energy.....	2,500	600
Chemicals.....	17,000	
Maintenance.....	110,985	5,306
Taxes and insurance...	37,975	1,591
Residual waste disposal.....		
Monitoring, analysis and reporting.....	15,000	7,500
TOTAL OPERATION AND MAINTENANCE COST	$239,460	$28,997
C. AMORTIZATION OF INVESTMENT COST	$180,572	$8,632
TOTAL ANNUAL COST	$420,032	$37,629

*First level represents the base cost of treatment system. Other levels represent the incremental cost above base cost.

TABLE 18-10. MODEL PLANT TREATMENT COSTS

Subcategory SODIUM DICHROMATE

Production	50,000 metric tons per year	(55,125 tons per year)
	142 metric tons per day	(157 tons per day)
Waste water flow	1000 cubic meters per day.	

	LEVEL OF TREATMENT*	
	FIRST	SECOND
A. INVESTMENT COST		
Construction	$1,375,800	$8,600
Equipment in place, including piping, fittings, electrical work and controls.....	302,500	80,500
Monitoring equipment in place.....	7,000	
Engineering design and inspection.....	337,060	17,820
Incidentals, overhead, fees, contingencies...	337,060	17,820
Land.....	252,000	
TOTAL INVESTMENT COST	$2,611,420	$124,740
B. OPERATION AND MAINTENANCE COST		
Labor and supervision.	$56,000	$14,000
Energy.....	2,800	1,000
Chemicals.....	42,000	
Maintenance.....	235,942	12,474
Taxes and insurance...	78,342	3,742
Residual waste disposal.....		
Monitoring, analysis and reporting.....	15,000	7,500
TOTAL OPERATION AND MAINTENANCE COST	$430,084	$38,716
C. AMORTIZATION OF INVESTMENT COST	$383,877	$20,295
TOTAL ANNUAL COST	$813,961	$59,011

*First level represents the base cost of treatment system.
Other levels represent the incremental cost above base cost.

TABLE 18-11. MODEL PLANT TREATMENT COSTS

Subcategory SODIUM DICHROMATE

Production	70,000 metric tons per year	(77,175 tons per year)
	200 metric tons per day	(220 tons per day)
Waste water flow	1400 cubic meters per day.	

	LEVEL OF TREATMENT*	
	FIRST	SECOND
A. INVESTMENT COST		
Construction	$1,742,950	$12,200
Equipment in place, including piping, fittings, electrical work and controls.....	390,500	91,500
Monitoring equipment in place.....	9,000	
Engineering design and inspection.....	428,490	20,740
Incidentals, overhead, fees, contingencies...	428,490	20,740
Land.....	324,000	
TOTAL INVESTMENT COST	$3,323,430	$145,180
B. OPERATION AND MAINTENANCE COST		
Labor and supervision.	$56,000	$14,000
Energy.....	2,800	1,000
Chemicals.....	58,000	
Maintenance.....	299,943	14,518
Taxes and insurance...	99,702	4,355
Residual waste disposal.....		
Monitoring, analysis and reporting.....	15,000	7,500
TOTAL OPERATION AND MAINTENANCE COST	$531,445	$41,373
C. AMORTIZATION OF INVESTMENT COST	$488,007	$23,620
TOTAL ANNUAL COST	$1,019,452	$64,993

*First level represents the base cost of treatment system. Other levels represent the incremental cost above base cost.

shown graphically in Figure 18-6. Treatment cost per metric ton of product is shown in Figure 18-7.

Table 18-12 gives a summary of the unit cost distribution between amortization, and the operation and maintenance cost components at various production rates and levels of treatment.

At the first level of treatment, investment costs are high because sludge lagoons costs are provided for a ten-year period. Therefore, amortization is the major portion of the total annual costs. In place of annual cost for the residual waste (sludge) disposal, a large investment in land is shown. At the second level of treatment, labor and amortization have significant impact on the additional annual costs.

18.7 BASIS FOR REGULATIONS

18.7.1 BPT Effluent Limitations

Technology Basis

BPT regulations for the Sodium Dichromate Subcategory are presently in effect, 40 CFR 415.172 (Table 18-2). The technology basis for the existing BPT is sulfide reduction of hexavalent chromium, followed by alkaline precipitation of metals and clarification. As an alternative to the use of sodium bisulfide, the reduction of hexavalent chromium may be accomplished by reaction with ferrous iron or sulfur dioxide under acidic conditions. All three plants in this subcategory have installed BPT technology and are meeting the limits.

Necessary to the achievement of good effluent quality after precipitation of heavy metals, is the control of suspended solids. In the Sodium Dichromate Subcategory, it can be assumed that chromium is a significant constituent in the suspended solids discharged. For this reason, only one advanced treatment alternative, addition of a filtration unit for solids control, has been recommended.

Response to Remand Issues

The zero discharge requirement originally promulgated as BAT for sodium dichromate production was remanded on the basis of inadequate technical and economic justification for the evaporative technology required to eliminate discharge. A control and treatment alternative, which allows waste water discharge, has been identified and the performance levels achievable have been demonstrated at one facility.

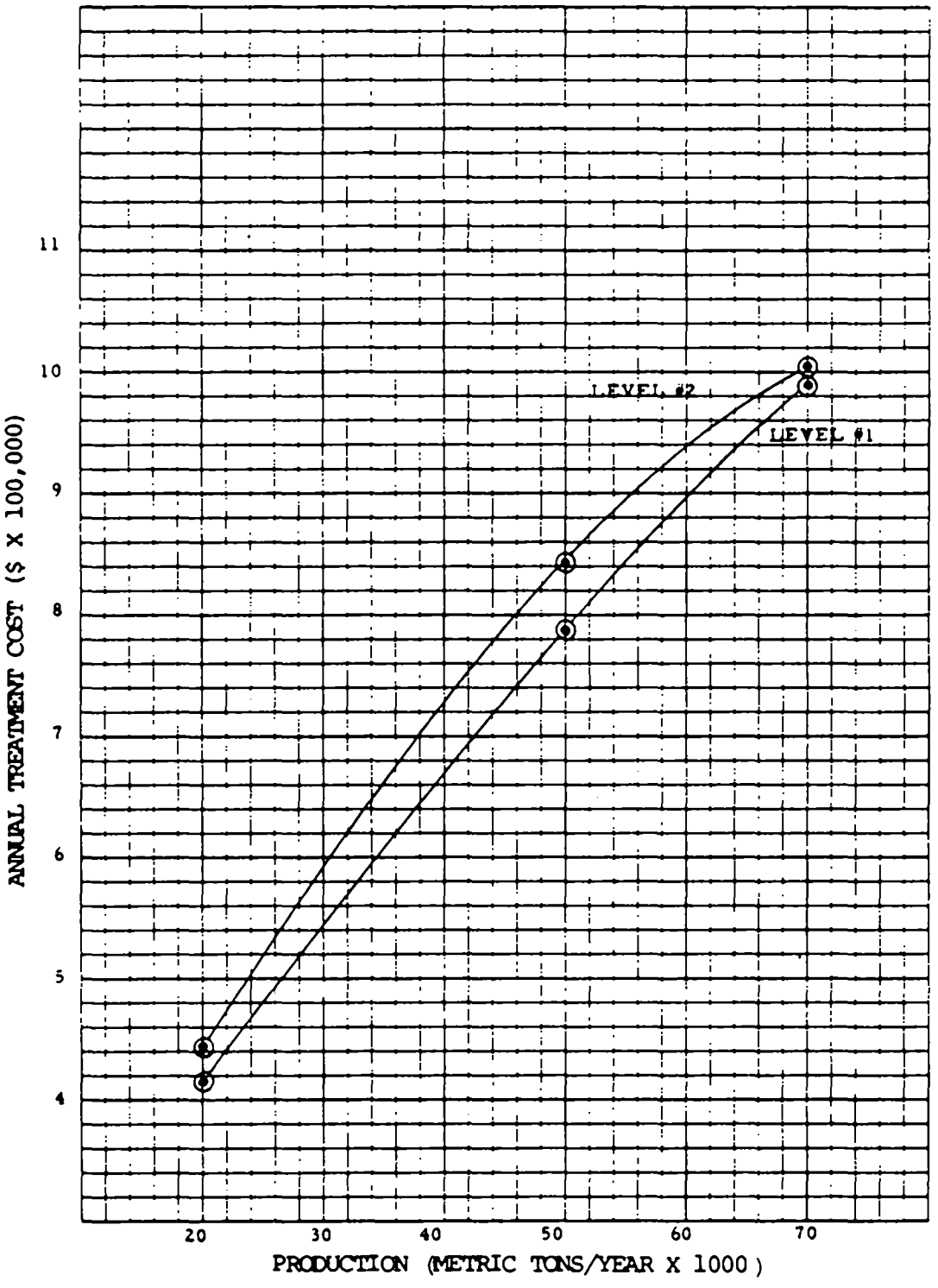

Figure 18-6. Relationship of annual treatment cost to production for the Sodium Dichromate Subcategory

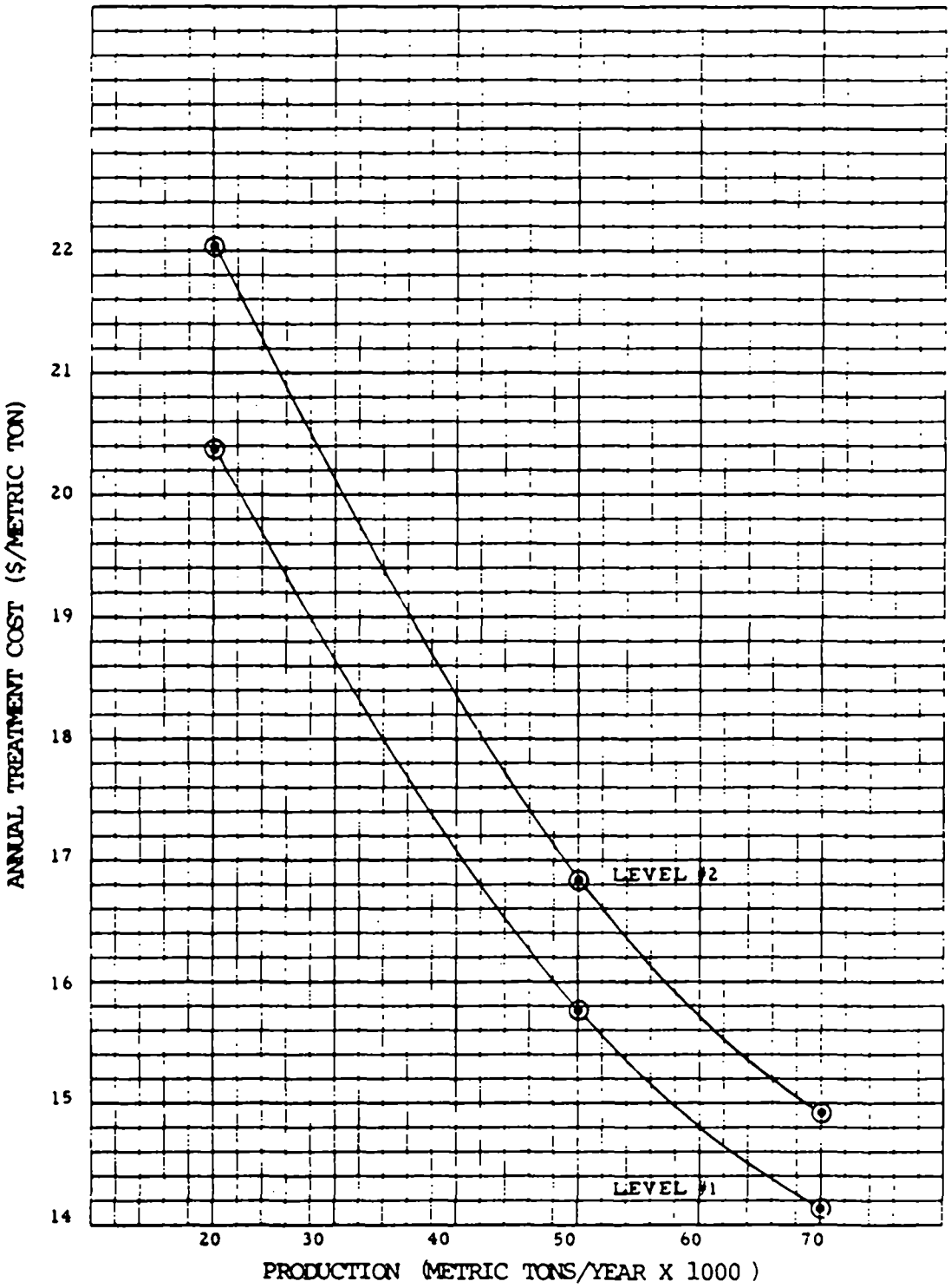

Figure 18-7. Relationship of annual unit treatment cost to production for the Sodium Dichromate Subcategory

TABLE 18-12. MODEL PLANT TREATMENT COSTS

Subcategory SODIUM DICHROMATE

COST ITEM	PRODUCTION (kkg/yr)	FLOW (m3/day)	Annual Treatment Costs ($/kkg) LEVEL OF TREATMENT FIRST	SECOND	THIRD	FOURTH
Annual Operation and Maintenance	20,000	400	11.97	1.45	Not Applicable	
	50,000	1,000	8.60	0.77		
	70,000	1,400	7.59	0.59		
Annual Amortization	20,000	400	9.03	0.43		
	50,000	1,000	7.68	0.41		
	70,000	1,400	6.97	0.34		
Total Cost	20,000	400	21.00	1.88		
	50,000	1,000	16.28	1.18		
	70,000	1,400	14.56	0.93		

Flow Basis

The model plant waste water flow rate is based on the raw waste influent data obtained from three plants as shown in Table 18-3. The flow rate selected, 8.5 m3/kkg, is the average of the flows for these three plants. All three plants are included in the flow averaging because the waste sources were typical for the industry at the time of sampling and represent the range of inflow rates expected to be handled by a BPT treatment system.

Selection of Pollutants to be Regulated

For BPT regulations the Agency is retaining the pollutants that are presently limited under 40 CFR 415.172. These are pH, total suspended solids (TSS), hexavalent chromium (CrVI), and total chromium (Cr). The significance of these pollutants is substantiated by the screening and verification data presented in Section 18.1.1.

The available treatment technology for the removal of chromium from waste water necessitates the reduction of hexavalent chromium (chromate or dichromate) to the trivalent state which can then be precipitated as chromic hydroxide, $Cr(OH)_3$. Thus, from the regulatory point of view, an effluent limitation on the discharge of total chromium effectively limits hexavalent chromium as well. But, placing limitations on both forms of chromium in the Sodium Dichromate Subcategory is consistent with the primary objective of controlling specifically the highly toxic hexavalent form by means of a two-step treatment process. In light of the potential analytical difficulties associated with the measurement of hexavalent chromium discussed in Section 5.1.3, monitoring both the hexavalent chromium and the total chromium content of the treated effluent provides an additional assurance that high chromate levels would not go undetected. As treatment system performance data are accumulated, support may develop for a decreased monitoring requirement or the elimination of effluent limitations on hexavalent chromium.

Basis for Pollutant Limitations

Conventional Parameters -

A. pH: After final pH adjustment, the BPT treated effluent is to be held within the pH range of 6 to 9. The pH limitation is based on Appendix B of this report and a study report, "An Assessment of pH Control of Process Waters in Selected Plants" by JRB Associates, Inc. (52).

B. TSS: The present study substantiates the basis for the existing BPT limitation on total suspended solids. The treated

effluent sampling data from two plants presented in Table 18-13 suggest that the TSS concentrations found in sampling represent achievable performance of a well operated BPT system. This is in agreement with the 26 mg/l TSS which is the concentration basis for the existing maximum 30-day average effluent limitation (Table 18-2). For comparison, Table A-11a summarizes the long-term data available from another subcategory where a similar BPT is applied. Plant #376 discharged an average TSS of 11 mg/l without filtration. Monitoring data from Plant #493 shown at the bottom of Table 18-13 indicates that 25 mg/l is an achievable maximum 30-day average for TSS with filtration. Thus, individual plant performance can be seen as a function of a very large number of operating variables and waste characteristics. In general, the available performance data support the achievability of the existing regulations.

The variability factor ratio (VFR) of 2.0 is derived from the long-term data on chromium as presented in Tables A-9a-1, and following. This VFR value is used for TSS and chromium because a significant proportion of the TSS is composed of suspended metal hydroxides resulting from BPT treatment. For TSS, the maximum 30-day average limitation is related to the concentration basis and the model plant flow as follows:

$$(26\ \text{mg/l})(8.5\ \text{m3/kkg})\left(\frac{\text{kg/m3}}{1000\ \text{mg/l}}\right) = 0.22\ \text{kg/kkg}$$

and the daily maximum limitation is obtained by multiplying by the VFR;

$$(2.0)(0.22\ \text{kg/kkg}) = 0.44\ \text{kg/kkg}$$

Toxic Pollutants -

A. Chromium: For BPT, the Agency is retaining the existing limitations on total and hexavalent chromium as given in 40 CFR 415.172 (Table 18-2). The verification sampling data from Plant #376 (Table 18-13) provide support for the 30-day average concentration bases used for total and hexavalent chromium. The observed performance level of 0.81 mg/l of total chromium falls between the maximum 30-day average and the daily maximum concentration limits of 0.50 and 1.0 mg/l, respectively, for the model plant.

For hexavalent chromium, the observed performance level of less than 0.01 mg/l was below the accepted lower limit of treatability (0.05 mg/l) from Table 8-11. The treatability level was the basis of the 30-day average concentration basis of 0.060 mg/l used for the existing BPT regulations (Tables 18-2 and 18-14).

TABLE 18-13. EFFLUENT SAMPLING DATA FROM SODIUM DICHROMATE PLANTS

Pollutant	Screening & Verification Data			
	Plant #376		Plant #493	
	(mg/l)	(kg/kkg)	(mg/l)	(kg/kkg)
Total Suspended Solids, TSS	11	0.046	2.0	0.0085
Hexavalent Chromium, Cr (VI)	< 0.01	< 0.00004	0.004	0.00002
Total Chromium, Cr (T)	0.81	0.0034	2.5	0.011
Copper, Cu	0.012	0.00005	0.016	0.00007
Nickel, Ni	0.20	0.00083	0.090	0.00038
Selenium, Se	< 0.005	< 0.00002	0.10	0.00043
Silver, Ag	0.015	0.00006	< 0.007	< 0.00003
Zinc, Zn	0.008	0.0003	0.11	0.00047
Flow (m^3/kkg)	4.16		4.25	

	Long Term Monitoring Data-Maximum 30-Day Averages Plant #493 (1) (2)	
	(mg/l)	(kg/kkg)
TSS	25	0.11
Cr (VI)	0.023	0.00010
Cr (T)	0.072	0.00031

(1) Filtered effluent data reported in response to 308 questionnaire (12-22-76)

(2) The number of samples is unknown.

The VFR of 2.0 used for total chromium is confirmed by long-term data (Tables A-9a-1, and following) on alkaline precipitation of chromium in another subcategory where a 1.8 value was determined for a similar BPT technology.

The existing 24-hour maximum effluent limitation that was published for hexavalent chromium is in error as it appears in 40 CFR 415.172. The correct value is 0.0009 kg/kkg reflecting an overall VFR value of approximately 1.8 for the residual hexavalent chromium remaining after the two-step treatment process.

For total chromium, the maximum 30-day average limitation is,

$$(0.50\ mg/l)(8.5\ m3/kkg)\left(\frac{kg/m3}{1000\ mg/l}\right) = 0.0044\ kg/kkg$$

and, by applying the VFR value of 2.0, the daily maximum is,

$$(2.0)(0.0044\ kg/kkg) = 0.0088\ kg/kkg$$

For hexavalent, the maximum 30-day average limitation is,

$$(0.060\ mg/l)(8.5\ m3/kkg)\left(\frac{kg/m3}{1000\ mg/l}\right) = 0.0005\ kg/kkg$$

and the daily maximum is obtained using the VFR value of 1.8, that is,

$$(1.8)(0.0005\ kg/kkg) = 0.0009\ kg/kkg$$

B. Other Metals: The concentration bases for nickel and zinc are also given in Table 18-14. These and other similar metals will be effectively removed by the BPT alkaline precipitation step. Copper, silver, selenium, arsenic, and lead did not occur at concentrations high enough to be treatable and are therefore not regulated. An adequate removal of these metals is expected with a BPT treatment system specifically designed to provide optimum conditions for the precipitation of chromic hydroxide.

18.7.2 BCT Effluent Limitations

For the control of conventional pollutants, the Agency is setting BCT equal to BPT because the addition of more treatment technology to increase the removal of TSS failed to pass the BCT cost comparison test described in Section 3.3.3 of this report.

TABLE 18-14. PROPOSED LIMITATIONS
Sodium Dichromate
Best Practicable Control Technology Currently Available
Waste Water Flow: 8.5 m^3/kkg

Pollutant	Subcategory Performance (mg/l)	VFR[1]	Concentration Basis (mg/l)		Effluent Limit (kg/kkg)	
			30-day Avg	24-hr Max	30-day Avg	24-hr Max
Conventional Pollutants:						
Total Suspended Solids	11[3]	2.0	26	52	0.22	0.44[2]
Toxic Pollutants:						
Total Chromium	0.81[3]	2.0[5]	0.50	1.0	0.0044	0.0088[2]
Hexavalent Chromium	0.050[4]	1.8[6]	0.060	0.11	0.0005	0.0009[2]
Nickel	0.20[3]	2.0	0.20[4]	1.0		
Zinc	0.50[4]	2.0	0.5	1.0		

(1) VFR: ratio of the 24 hour variability factor to the 30 day variability factor.

(2) Existing regulations, 40 CFR 415.72 (Table 18-2)

(3) Verification sampling averages from Plant #376 (Table 18-13).

(4) Lower limit of treatability (Table 8-11).

(5) The VFR used in original regulation is confirmed by long term data on alkaline precipitation of chromium in another subcategory (Tables A-9a-1, etc.)

(6) VFR used in original regulation.

18.7.3 BAT Effluent Limitations

Technology Basis

For BAT, the Agency is proposing limitations based on technology that includes BPT treatment plus the addition of dual media filtration to remove additional toxic metals from the effluent. One plant has installed BAT treatment and is presently meeting the proposed limitations.

Flow Basis

The 308 data was collected from three plants of which two are still operating. For BAT, the model plant flow rate selected is 7.0 m3/kkg which is the average of the two plants still operating, i.e., Plants #398 and #493. Plant #376 which is the third plant has shut down its sodium dichromate production facilities.

Selection of Pollutants to be Regulated

For the BPT regulations previously developed, the pollutant parameters of concern were identified as pH, TSS, hexavalent chromium, and total chromium. The selection of toxic pollutants for control at the BAT step is based on the results of the screening and verification sampling program reported in this document. In Section 18.3.3 a tabular summary of the maximum observed raw waste concentrations is presented to show the relative importance of the metals that were found. No detectable concentrations of toxic organic substances were found. Of the metals found, chromium, nickel and zinc were by far the dominant pollutants in terms of maximum concentrations, while copper, silver, lead, and selenium were found at lower levels. Because of the high percentage of total chromium in the hexavalent state it was concluded that the limitation of both hexavalent and total chromium was advisable to assure reduction of chrome (+6) to chromium (+3) which is part of the technology basis for the regulation. The total subcategory raw waste loadings are also shown in Section 18.3.3. These are based on the average observed concentrations and loadings presented in Table 18-8.

The estimated total loadings for the subcategory confirm importance of chromium, nickel and zinc and these three metals have been selected as the control parameters for the BAT regulations.

Basis of Pollutant Limitations

Nonconventional Pollutants - No nonconventional pollutants have been identified for control in the Sodium Dichromate Subcategory.

Toxic Pollutants -

A. Chromium: The addition of dual media filtration to BPT is expected to achieve the removal of an additional 60 percent of the total chromium in the treated effluent. This estimate is based on literature treatability data (41) on chromium presented in Table 8-11 and discussed further in Section 12.3.3. Thus, using the sampling data obtained from Plant #376 (Table 8-13), the concentration basis for the 30-day average effluent limitation becomes 0.32 mg/l total chromium with BAT treatment. That is,

$$(1.00 - 0.60)(0.81 \text{ mg/l}) = 0.32 \text{ mg/l}$$

The hexavalent chromium contribution to the total chromium concentration is negligible when the chromate reduction step is properly designed and operated. However, for BAT the designation of hexavalent chromium as a control parameter is retained and the proposed maximum 30-day average limitation is based on the accepted lower limit of treatability derived from literature data (Table 8-11), that is, 0.05 mg/l. The observed performance at Plants #376 and #493 shown in Table 18-13 supports the achievability of this concentration on a 30-day average basis.

The VFR value of 2.0 used for BPT is supported by long-term data (Tables A-9a-1, and following) and is also used for the proposed BAT regulations. This value applies to both the total and hexavalent forms of chromium. Thus, for total chromium, the proposed maximum 30-day average limitation is,

$$(0.32 \text{ mg/l})(7.0 \text{ m3/kkg}) \left(\frac{\text{kg/m3}}{1000 \text{ mg/l}}\right) = 0.0022 \text{ kg/kkg}$$

and, applying the VFR value of 2.0, the proposed daily maximum is,

$$(2.0)(0.32 \text{ mg/l})(7.0 \text{ m3/kkg}) \left(\frac{\text{kg/m3}}{1000 \text{ mg/l}}\right) = 0.0045 \text{ kg/kkg}$$

For hexavalent chromium, the proposed maximum 30-day average limitation is:

$$(0.050 \text{ mg/l})(7.0 \text{ m3/kkg}) \left(\frac{\text{kg/m3}}{1000 \text{ mg/l}}\right) = 0.00035 \text{ kg/kkg},$$

and the proposed daily maximum is,

$$(2.0)(0.00035 \text{ kg/kkg}) = 0.00070 \text{ kg/kkg}$$

The proposed limitations are shown in Table 18-14.

B. Nickel: Starting with the BPT concentration basis shown in Table 18-14, and dual media filtration will remove an additional 14 percent (41) of the nickel from the treated effluent, the proposed 30-day average limitation for BAT was determined to be (1.00 -0.14)(0.20 mg/l) = 0.17 mg/l. The VFR value of 2.0 that was used for chromium was also applied to nickel because of the similarity in the treatment chemistry of these metals. Thus, the proposed maximum 30-day average nickel limitation is,

$$(0.17\ \text{mg/l})(7.0\ \text{m3/kkg})\left(\frac{\text{kg/m3}}{1000\ \text{mg/l}}\right) = 0.0012\ \text{kg/kkg},$$

and, the corresponding daily maximum limitation is:

$$(2.0)(0.0012\ \text{kg/kkg}) = 0.0024\ \text{kg/kkg}$$

C. Zinc: For BAT, the proposed zinc limitation is based on the lower limit of treatability by alkaline precipitation and a filter efficiency of 6 percent (41). Thus, the concentration basis for the maximum 30-day average effluent limitations was set at 0.47 mg/l as follows:

$$(1.00 - 0.06)(0.50\ \text{mg/l}) = 0.47\ \text{mg/l}$$

The VFR value of 2.0 was also used on zinc for the same reasons given in the discussion of the chromium and nickel limitations. Thus, the proposed maximum 30-day average limitation is,

$$(0.47\ \text{mg/l})(7.0\ \text{m3/kkg})\left(\frac{\text{kg/m3}}{1000\ \text{mg/l}}\right) = 0.0033\ \text{kg/kkg}$$

and the proposed daily maximum limitation is,

$$(2.0)(0.0033\ \text{kg/kkg}) = 0.0066\ \text{kg/kkg}.$$

D. Other Metals: Other toxic metals detected in the raw waste waters include copper, lead, silver, selenium, and arsenic. None of these occured at maximum concentrations considered treatable by the applied technology for BAT or NSPS, and therefore specific numerical limitations are not proposed. Should any of these toxic metals be found at treatable raw waste concentrations, effluent limitations would be established on a case-by-case basis by applying the appropriate lower limits of treatability from Table 8-11 as the concentration bases for maximum 30-day average limitation.

18.7.4 NSPS Effluent Limitations

Technology Basis

For new sources the EPA is proposing to replace the existing NSPS regulations (40 CFR 415.174) with a new NSPS regulation based on BAT.

Flow Basis

For the new NSPS, the model plant flow rate is the same rate that was applied to the model plant BAT systems, i.e., 7.0 m3/kkg. The basis for this flow rate is described in Section 18.7.3.

Selection of Pollutants to be Regulated

For NSPS the Agency is proposing to regulate the same conventional parameters presently controlled under the existing BPT regulation. These are pH and TSS. No nonconventional pollutants have been selected for regulation.

For the control of toxic metals, the Agency has selected total and hexavalent chromium, nickel, and zinc on the basis of screening and verification data. The bases for toxic pollutant selection for NSPS are the same as those discussed for BAT in Section 18.7.3.

Basis for Pollutant Limitations

Conventional Pollutant Parameters -

A. pH: For NSPS, the Agency is proposing a pH limitation identical to the existing BPT regulation. The treated effluent is to be held within the range of pH 6 to 9. This limitation is supported by the results of studies presented in Appendix B of this report and the JRB Associates, Inc. report previously cited (52).

B. TSS: For NSPS, the EPA is proposing a total suspended solids limitation achievable with BAT treatment. The concentration basis for the maximum 30-day average is equal to the 25 mg/l derived from long-term data at Plant #493 (Table 18-13) where the equivalent of BAT treatment is practiced.

Thus, the proposed maximum 30-day average limitation is:

$$(25\ \text{mg/l})(7.0\ \text{mg/kkg})\left(\frac{\text{kg/m3}}{1000\ \text{mg/l}}\right) = 0.18\ \text{kg/kkg}$$

and the corresponding daily maximum is obtained by applying the VFR value of 2.0. That is,

$$(2.0)(25\ mg/l)(7.0\ m3/kkg)\left(\frac{kg/m3}{1000\ mg/l}\right) = 0.35\ kg/kkg$$

Nonconventional Pollutants - No nonconventional pollutants have been identified for control under NSPS regulations.

Toxic Pollutants - For NSPS, the proposed BAT limitations on total chromium, hexavalent chromium, nickel, and zinc apply. The bases for BAT limitations are discussed in Section 18.7.3. The proposed NSPS limitations are presented in Table 18-16.

18.7.5 Pretreatment Standards

Existing Sources

The Agency is proposing pretreatment standards for existing sources (PSES) based on BAT treatment. The pollutants limited by the proposed PSES are total chromium, hexavalent chromium, nickel and zinc. Table 18-15 presents the PSES limitations.

New Sources

There is an existing pretreatment standard for new sources (PSNS) in effect (40 CFR 415.176) which is based on BPT treatment. The Agency is proposing to amend this regulation by substituting new PSNS limitations based on BAT. The pollutants limited by the proposed new PSNS are total chromium, hexavalent chromium, nickel and zinc. Table 18-15 presents the proposed new PSNS limitations. At present, there are no indirect dischargers in this subcategory.

TABLE 18-15. PROPOSED LIMITATIONS

Sodium Dichromate
Best Available Technology (1)
Waste Water Flow: 7.0 m3/kkg

Pollutant	Treatability (mg/l)	VFR(2)	Concentration Basis (mg/l)		Effluent Limit (kg/kkg)	
			30-day Avg	24-hr Max	30-day Avg	24-hr Max
Toxic Pollutants:						
Total Chromium	0.32(3)	2.0	0.32	0.64	0.0022	0.0045
Hexavalent Chromium	0.050(4)	2.0	0.050	0.10	0.00035	0.00070
Nickel	0.17(4)	2.0	0.17	0.34	0.0012	0.0024
Zinc	0.47(4)	2.0	0.47	0.94	0.0033	0.0066

(1) Including pretreatment standards for existing sources (PSES) and pretreatment standards for new sources (PSNS) expressed as concentration limitations but with mass equivalents as an alternate.

(2) VFR: ratio of the 24 hour variability factor to the 30 day variability factor.

(3) BPT performance basis with additional 60 percent removal by filtration.

(4) Estimated lower limit of treatability with filtration.

TABLE 18-16. CONTROL PARAMETER LIMITATIONS
Sodium Dichromate
New Source Performance Standards
Waste Water Flow: 7.0 m^3/kkg

Pollutant	Treatability (mg/l)	VER[1]	Concentration Basis (mg/l)		Effluent Limit (kg/kkg)	
			30-day Avg	24-hr Max	30-day Avg	24-hr Max
Conventional Pollutants:						
Total Suspended Solids	25[2]	2.0	25	50	0.18	0.35
Toxic Pollutants:						
Total Chromium	0.32[2]	2.0	0.32	0.64	0.0022	0.0045
Hexavalent Chromium	0.050[2]	2.0	0.050	0.10	0.00035	0.00070
Nickel	0.17[3]	2.0	0.17	0.34	0.0012	0.0024
Zinc	0.47[3]	2.0	0.47	0.94	0.0033	0.0066

(1) VFR: Ratio of the 24 hour variability factor to the 30 day variability factor.

(2) Maximum 30-day average performance at Plant #493 (Table 18-13) This plant employs treatment equal to BAT.

(3) The lower limit of the literature treatability estimate (Table 8-11) is used as the basis for the 30-day average limitation when the observed average of the sampling data is below this level. The sampling data are presented in Table 18-10, Plant #493.

SECTION 19

CARBON DIOXIDE INDUSTRY

19.1 SUMMARY OF DETERMINATIONS

It has been determined that no further effort will be given to developing BPT, BAT, NSPS, and Pretreatment regulations for the carbon dioxide subcategory. The basis for this determination is that no toxic pollutants were found at significant levels in the process related waste water during the screening of one plant. The subcategory is excluded under Paragraph 8 of the Consent Decree.

19.2 ASSESSMENT OF THE WATER POLLUTION POTENTIAL

19.2.1 Production Processes and Effluents

Carbon dioxide is produced in gaseous, liquid, or solid form. Most of the carbon dioxide is produced as a by-product of ammonia production. A major portion of the carbon dioxide is used captively for producing urea and secondary recovery of oil and natural gas. It is also used for refrigeration, in the food industry for the carbonation of beverages, in fire extinguishing equipment, and oil well stimulation.

The process waste water is derived from gas scrubbing and condensation. The only toxic pollutant found at a significant concentration is the raw waste during screening at one plant was zinc (910 μg/l). When the data was reviewed with plant personnel, it was discovered that the zinc level was due to zinc corrosion inhibitors and was not process related. Control of zinc from this type of source is best achieved by management on a case-by-case basis by the permitting authority. The subcategory profile data is given in Table 19-1.

Maximum concentration of toxic pollutants found in screening at one plant were:

TABLE 19-1. - SUBCATEGORY PROFILE DATA SUMMARY

SUBCATEGORY	CARBON DIOXIDE
Total subcategory capacity rate	12,194,000 kkg/year
Total subcategory production rate	1,819,000 kkg/year
Number of plants in this subcategory	105
308 Data on file for	12
With total capacity of	713,947 kkg/year
With total production of	558,667 kkg/year
Representing capacity	59 percent
Representing production	31 percent
Plant production range:	
Minimum	1,600 kkg/year
Maximum	155,000 kkg/year
Average production	NA
Median production	NA
Average capacity utilization	NA
Plant age range:	
Minimum	6 years
Maximum	50 years
Waste water flow range:	
Minimum	NA
Maximum	NA
Volume per unit product:	
Minimum	NA
Maximum	NA

Sources of data are Stanford Research Institute, Directory of Chemical Producers, U.S.A., 1977, U.S. Department of Commerce, Current Industrial Reports, December 1977; Energy and Environmental Analysis, Inc.; Draft Report, "Preliminary Economic Assessment of Effluent Limitations in the Inorganic Chemical Industry," June, 1978 and "Economic Analysis of Proposed Revised Effluent Guidelines and Standards for the Inorganic Chemicals Industry," March, 1980.

NA = Not Available

Pollutant	µg/l
Zinc	910
Copper	75
Chromium	31

19.3 STATUS OF REGULATIONS

Subpart AF has been reserved for this subcategory.

Intentionally Blank Page

SECTION 20

CARBON MONOXIDE AND BY-PRODUCT HYDROGEN INDUSTRY

20.1 SUMMARY OF DETERMINATIONS

It has been determined that no further effort be given to developing BAT, NSPS, and Pretreatment regulations for the Carbon Monoxide and By-Product Hydrogen Subcategory. The basis for this determination is that no toxic pollutants were found at significant levels in the process related waste water during the screening of one plant. The subcategory is excluded under Paragraph 8 of the Consent Decree.

20.2 ASSESSMENT OF THE WATER POLLUTION POTENTIAL

20.2.1 Production Processes and Effluents

Carbon monoxide is produced as a result of production of hydrogen by refining natural gas. It is also recovered from several gas sources including partial combustion of oil or natural gas, coke oven gas, blast furnace gas, water gas, and methane reformer gas.

The major use of carbon monoxide is for the manufacture of methanol. It is also used in the production of ammonia, acetic acid, zinc white pigments, and for reducing oxides for special steels and nickel refining.

The industry profile data is given in Table 20-1.

Toxic pollutants detected in the raw waste during screening at one plant were:

Pollutant	Concentration (μg/l)
Chromium	2590
Zinc	820
Silver	1.4
Mercury	1.2

The only pollutants of significance in terms of waste loads are chrome and zinc. However, those result from the additives

TABLE 20-1 - SUBCATEGORY PROFILE DATA SUMMARY

SUBCATEGORY	CARBON MONOXIDE AND BY-PRODUCT HYDROGEN
Total subcategory capacity rate	
Total subcategory production rate	277,200 kkg/year
Number of plants in this subcategory	5
308 Data on file for	5
With total capacity of	
With total production of	112,400 kkg/year
Representing capacity	
Representing production	40 percent
Plant production range:	
Minimum	47 kkg/year
Maximum	63,000 kkg/year
Average production	NA
Median production	NA
Average capacity utilization	NA
Plant age range:	
Minimum	8 years
Maximum	19 years
Waste water flow range:	
Minimum	NA
Maximum	NA
Volume per unit product:	
Minimum	NA
Maximum	NA

Sources of data are Stanford Research Institute, Directory of Chemical Producers, U.S.A., 1977, U.S. Department of Commerce, Current Industrial Reports, December 1977; Energy and Environmental Analysis, Inc.; Draft Report, "Preliminary Economic Assessment of Effluent Limitations in the Inorganic Chemical Industry," June, 1978 and "Economic Analysis of Proposed Revised Effluent Guidelines and Standards for the Inorganic Chemicals Industry," March, 1980.

NA = Not Available

used in cooling water to inhibit corrosion, and are not process related. Control of zinc and chromium from this type of source is best achieved by best management practices on a case-by-case basis by the permitting authority.

20.3 STATUS OF REGULATIONS

Subpart AG has been reserved for this subcategory.

Intentionally Blank Page

SECTION 21

COPPER SULFATE INDUSTRY

21.1 INDUSTRIAL PROFILE

21.1.1 General Description

Most of the copper sulfate produced is sold in the merchant market, consequently captive use is very small. Copper sulfate is produced either as a liquid solution or dried crystals. It is used in agriculture as a pesticide, and as an additive to copper-deficient soils. It is also used in electroplating and petroleum refining, and as a preservative for wood. Of the 16 plants in this industry, four plants produce copper sulfate in significant quantities and account for 70% of the total U.S. production. Two of these facilities account for over 50%.

The industrial profile data for this subcategory are given in Table 21-1. The status of regulations is summarized in Table 21-2.

21.1.2 General Process Description and Raw Materials

Copper sulfate is produced by reacting copper with sulfuric acid, air and water. The general reaction is:

$$Cu + 1/2\ O_2 + H_2SO_4 = CuSO_4 + H_2 \qquad (1)$$

Various forms of copper feed material are used, from pure copper to copper slag. The purity of raw materials significantly effects the quality and quantity of raw waste generated. One plant does not start with copper metal but uses a waste stream from a copper refinery which consists of copper, sulfuric acid, and a small amount of nickel. The solution needs to be strengthened by the addition of more copper but the same general equation applies.

Copper metal and/or copper refinery waste stream, steam, water, sulfuric acid and air are treated in oxidizer tanks at 100° C to produce a solution of copper sulfate. This solution is partially concentrated by evaporation.

TABLE 21-1. SUBCATEGORY PROFILE DATA SUMMARY

SUBCATEGORY	COPPER SULFATE
Total subcategory capacity rate	Indeterminate
Total subcategory production rate	27,300 kkg/year
Number of plants in this subcategory	16
308 Data on file for	10
With total capacity of	33,850 kkg/year
With total production of	21,420 kkg/year
Representing capacity	
Representing production	78 percent
Plant production range:	
Minimum	45 kkg/year
Maximum	9,100 kkg/year
Average production	2,100 kkg/year
Median production	790 kkg/year
Average capacity utilization	63 percent
Plant age range:	
Minimum	3 years
Maximum	52 years
Waste water flow range:	
Minimum	0 cubic meters/day
Maximum	45 cubic meters/day
Volume per unit product:	
Minimum	0 cubic meter/kkg
Maximum	23 cubic meter/kkg

Sources of data are Stanford Research Institute, Directory of Chemical Producers, U.S.A., 1977, U.S. Department of Commerce, Current Industrial Reports, December 1977; Energy and Environmental Analysis, Inc.; Draft Report, "Preliminary Economic Assessment of Effluent Limitations in the Inorganic Chemical Industry,"June, 1978 and "Economic Analysis of Proposed Revised Effluent Guidelines and Standards for the Inorganic Chemicals Industry March, 1980.

TABLE 21-2. STATUS OF REGULATIONS - EFFLUENT LIMITATION GUIDELINES

SUBCATEGORY Copper Sulfate

SUBPART AJ (40 CFR 415.360, 5/22/75)

		STANDARDS					
		BPCTCA		BATEA		NSPS	
Product Process	Parameters	Max.(1) (kg/kkg) (mg/l)	Avg.(2) (kg/kkg) (mg/l)	Max. (kg/kkg) (mg/l)	Avg. (kg/kkg) (mg/l)	Max. (kg/kkg) (mg/l)	Avg. (kg/kkg) (mg/l)
Pure Raw Materials Process	Cu	0.0006	0.0002				
Recovery Process	TSS	0.069	0.023				
	Cu	0.003	0.001				
	Ni	0.006	0.002				
	Se	0.0015	0.0005				

(1)- Max. = Maximum of any one day.

(2)- Avg. = Maximum average of daily values for thirty consecutive days.

If pure copper is used as a raw material, the resulting copper sulfate solution is pure enough to be either sold, or fed to crystallizers producing copper sulfate crystals. If impure copper feed, or copper refinery waste is used, the concentrated copper sulfate solution is filtered to remove other metal impurities. This purified solution can be sold as is or fed to the crystallizer. Copper sulfate crystals are recovered by centrifugation, dried at ~110° C, screened and then packed dry for sale. The mother liquor is recycled to the evaporator or crystallizer with some being purged to prevent impurities buildup. The purges are usually sold for metal recovery.

Figure 21-1 shows a general process flow diagram for the manufacture of copper sulfate.

21.2 WATER USE AND WASTE SOURCE CHARACTERISTICS

21.2.1 Water Use

Water is used in copper sulfate production as the reaction medium, and it may be evaporated to the atmosphere during crystallization or it becomes part of the dry product as its water of crystallization (hydration). Noncontact cooling water, including steam condensate, consitutes the major water use. Water is also used for pump seals and washdowns. Table 21-3 gives a summary of plant water usages found in this study for facilities where information was available from 308 Questionnaire responses and previous documents.

21.2.2 Waste Sources

Noncontact Cooling Water

Noncontact cooling water is used to cool the crystallizers and constitutes one of the main wastes. This waste stream should not be contaminated by process leaks, and therefore can be discharged without treatment.

Washdowns, Leaks, and Spills

Washdown, pump seal leaks, and spills are sources of contact waste water. These flows, however, are relatively small and intermittant, and do not represent a major waste source. Waste waters emanating from this source are either combined with the mother liquor, or treated and discharged.

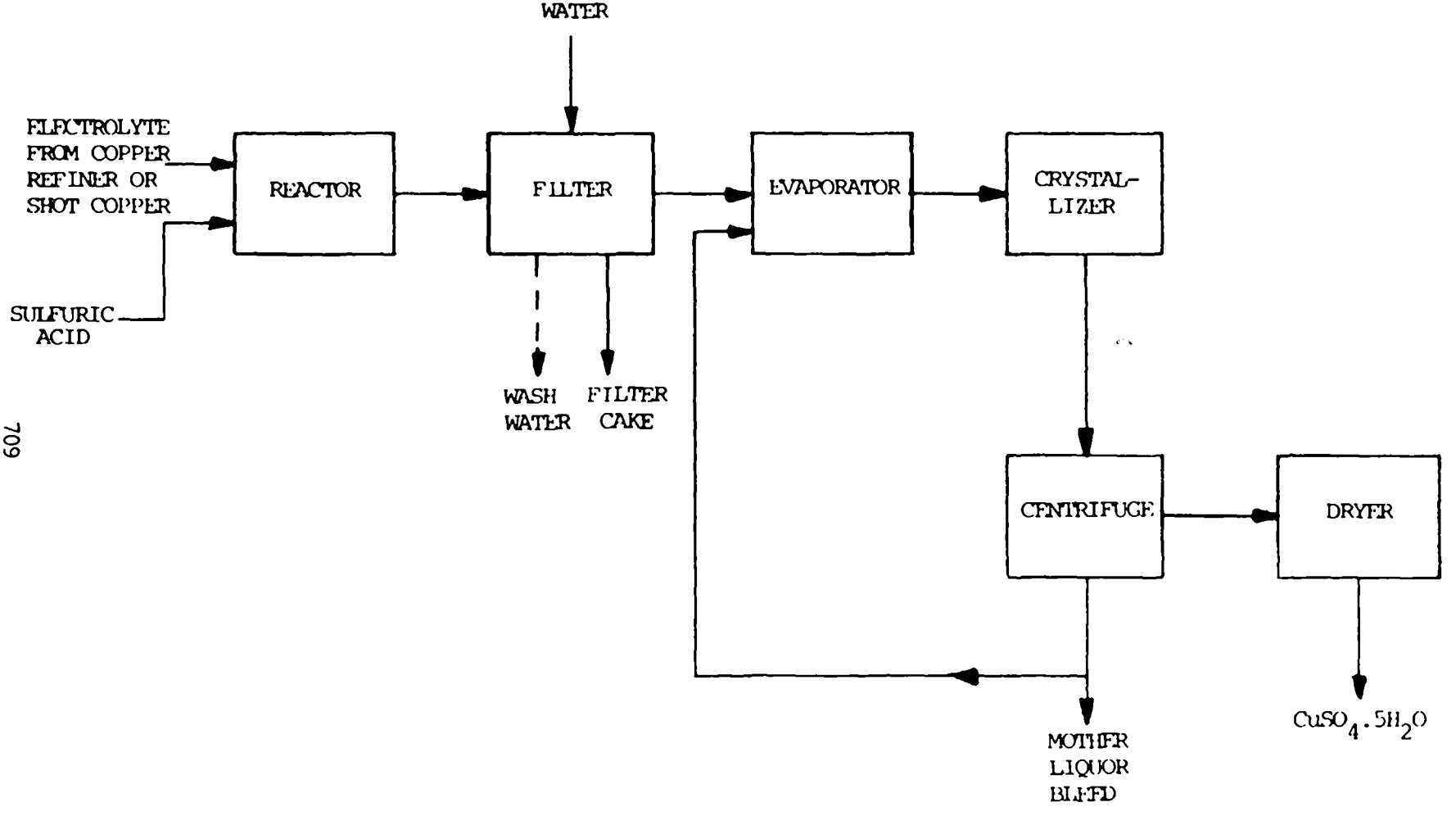

Figure 21-1. General block diagram of the manufacture of copper sulfate.

TABLE 21-3. WATER USAGE IN COPPER SULFATE SUBCATEGORY

	Water Usage at Plants (m^3/kkg)				
Source	#034	#284	#313 (1)	#069	#571
Process Contact	*	1.21 (2)	24.8	3.30	0.075
Noncontact Cooling	19.6	0	37.3	105	0
Maintenance Cleaning and Washdown, Pumps Seals and Leaks	1.25 (2)	0.35	0.28	3.77	0.017
Steam	38.6	0	0	0	0
Air Pollution Control	0	0.52	0	0	0

(1) Includes uses for other processes

(2) Maxiumum - includes groundwater infiltration

* Utilizes feed solution from another industry

Mother Liquor Purges

A small portion of the mother liquor is purged periodically from the process to prevent buildup of metal impurities. The amount of purge is variable and depends on the purity of feedstock. These purges are processed to separate metallic salts, particularly those of copper and nickel, from the impurities. These recovered metallic salts are used for other processes while the impurities are disposed of at an approved landfill.

Steam Condensate

A few plants use evaporators to concentrate the production solution. Steam condensate is an additional noncontact waste water formed in the process. This can also be discharged without treatment.

Sludge

Solid waste is generated in product purification by the filtration step. This is necessary only for plants utilizing impure copper, or copper refinery waste, as raw material. These filter sludges contain metallic impurities or copper sulfides and need disposal at an approved landfill.

Plants that produce copper sulfate in liquid form have no contact waste streams from the process. Plants utilizing pure copper feedstock are able to recycle most contact waste waters and generally have no discharge of contact wastes. Table 21-4 summarizes the quantities of waste water that go to the treatment facility, their sources, and the handling practices for plants which do not discharge waste waters. The data was taken from 308 Questionnaire responses, previous development documents, and industry visits.

21.3 DESCRIPTION OF PLANTS VISITED AND SAMPLED

21.3.1 Screening

Plant #034 was visited and process waste water and effluent samples were collected and analyzed for conventional and toxic pollutants. The process used at this plant is similiar to that described earlier, for one which utilizes a waste stream from a copper refining facility as its feedstock. The feedstock is strengthened by the addition of copper shot. The filter cake and wash water are sent to a settler where the cake and wash water are finally separated. The decant of the settler is recycled back to the reactor, while the settled sludge is sent

TABLE 21-4. WASTE WATER FLOW FOR THE COPPER SULFATE SUBCATEGORY

Plant	Avg. Waste Water Flow to Treatment (m^3/kkg of $CuSO_4$)	Waste Water Handling Practice
#034	0.94	Segregated treatment of $CuSO_4$ waste (lime treatment)
#284	0.52	Waste streams and treatment are combined with other mining, milling and manufacturing process wastes.
#313	23.4*	Waste streams and treatment are combined with other metal process wastes.
#069	4.01	Waste streams are combined with waste from other reagent grade processes and discharged to sewer.
#571	0	No discharge of waste from the process (recycle)
#885	0	No discharge of waste from the process (recycle)
#458	0	No discharge of waste from the process (recycle)
#100	0	No discharge of waste from the process (recycle)
#969	0	No discharge of waste from the process (recycle)
#050	0	No discharge of waste from the process (recycle)

* Flow is for the combined waste from all process per kkg of $CuSO_4$. Actual amount of flow contributed by $CuSO_4$ process is unavailable.

to another process for melting. Mother liquor purges from the centrifuge are also sent to other processes. Leaks, spills and washdown water flow down to a sump in the basement of the facility where it collects with contaminated ground water, and is then pumped to holding tanks. About one quarter of this waste water volume is comprised of contaminated ground water from the immediate area. From the holding tanks, the waste goes to the treatment facility where it is treated with lime, filtered and discharged to a collection tank.

The uncontaminated steam condensate from the evaporator, and noncontact cooling water from the crystallizer, are combined with the effluent from the lime treatment in a collection tank. The combined stream passes through a cloth filter for final polishing and is discharged to a sewer. The filter residue from the filter press is hauled to an approved landfill site. Figure 21-2 shows the general process and treatment flow diagram with the location of the sampling points. Table 21-5 presents flow data, total suspended solids (TSS), and copper and nickel emissions for the various waste streams sampled during screening.

21.3.2 Verification

Plant #034 was sampled again during the verification phase. Prior to this, the system was changed so that only the effluent from lime treatment goes to the collection tank and through the cloth filter. This effluent then combines with the steam condensate and noncontact cooling water waste streams after the cloth filter and discharges to the sewer.

Figure 21-1 also shows this change, and the subsequent new sample points for verification phase sampling. Table 21-5 also gives flow and discharge data for various waste streams sampled during verification.

Plant #034 was the only plant sampled for the copper sulfate subcategory. During the program, an attempt was made to locate other candidates for sampling. A search was conducted using the 308 questionnaires, published materials and the telephone. Out of the 17 other facilities, 11 have no discharge of process waste waters (practice recycle); four plants were large multi-product complexes with combined waste treatment systems where segregation of copper sulfate process wastes was impossible; and two plants produced only reagent grade product, and are therefore low volume producers.

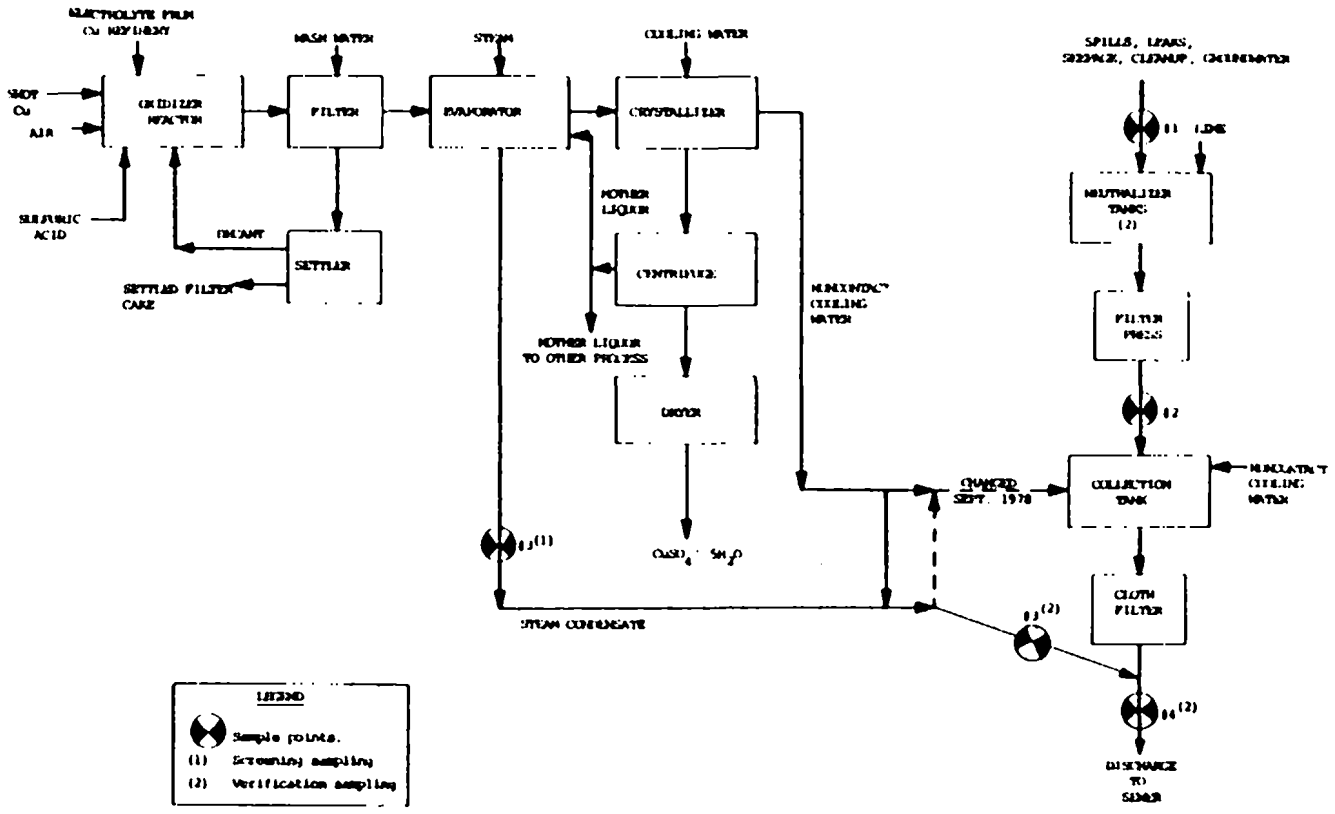

Figure 21-2. General process flow diagram at plant #034 showing the sampling points. (Copper sulfate manufacture.)

TABLE 21-5. FLOW AND POLLUTANT CONCENTRATION DATA OF THE SAMPLED WASTE STREAMS FOR PLANT #034 PRODUCING COPPER SULFATE

Stream No.	Sampled Stream Description	Unit Flow (m^3/kkg of $CuSO_4$)	TSS	Cu	Ni
			(all in kg/kkg of $CuSO_4$)		
	Screening (1)				
1	$CuSO_4$ waste *	1.25	0.087	4.2	0.25
2	Effluent from lime treatment	1.25	0.078	0.010	0.00053
3	Steam Condensate	0.209	0.00021	0.00016	0.000025
	Verification (2)				
1	$CuSO_4$ waste *	1.25	1.8	5.0	0.20
2	Effluent from lime treatment	1.25	0.030	0.0042	0.00038
3	Noncontact Cooling Water and Steam Condensate	14.2	0.11	0.024	0.0020

(1) From grab samples composited during the period of batch manufacturing and treatment process.

(2) Average of three daily grab samples composited during the period of batch manufacturing and treatment process.

* Infiltration of ground water into the collection sump was suspected at the time of sampling.

21.3.3 Toxic Pollutant Concentrations

The following toxic pollutants were found at detectable concentrations in the raw waste samples at copper sulfate Plant #034 during screening and verification sampling.

Maximum Raw Waste Concentration Observed
(µg/l)

Pollutant	Screening	Verification
Antimony	330	1,300
Arsenic	3,500	127,000
Cadmium	870	2,500
Chromium	140	940
Copper	1,850,000	3,940,000
Lead	180	2,200
Nickel	112,000	136,000
Zinc	11,000	17,000
1,1,1-trichloroethane	240	NA

NA = Not analyzed

A large portion of the raw waste water at this plant consists of ground water which seeps and collects in the basement, along with leaks and washdown water from the process. The ground water is contaminated from the surrounding area which is heavily industrialized. The trichloroethane is presumed to be external contamination because this chemical is not used in the process.

No other organic toxic pollutants were found at significant concentrations during screening sampling. Consequently, no organic toxic pollutants were analyzed for in the verification phase.

Section 5.1.2 of this report describes the methodology of the screening and verification sampling program. In the copper sulfate industry, a total of 6 days of sampling were conducted at Plant #034. Five different sampling points were involved covering the various raw wastes, and the intermediate and treated effluent streams. The evaluation of toxic metal content of these process related waste streams was based on 221 analytical data points. The screening for toxic organic pollutants at Plant #034 generated an additional 456 analytical data points. The unit loadings were calculated from the waste stream flow rates measured or estimated at the time of sampling, the measured pollutant concentration, and the reported copper sulfate production rate.

That is,

$$\text{Unit loading (as kg of pollutant per kkg of copper sulfate)} = \frac{(C)\ (Q)}{1000\ (P)}$$

Where:

C is the concentration of the pollutant expressed in units of mg/l (Note: kg/m3 = mg/l),

Q is the waste stream flow rate expressed in units of m3/day. (m3, a cubic meter, is equal to 264.2 U.S. gallons), and

P is the copper sulfate production rate expressed in units of kkg/day (kkg is 1000 kg, a metric ton, which is equal to 2205 lbs).

The average values are based on data from Plant #034 where the particular pollutant was found at concentrations greater than the analytical detection limits and in significant concentrations since it could be treated by an available treatment technology.

In Table 21-6, the toxic pollutant raw waste data are presented as the average daily concentrations and the unit loading found during each sampling at Plant #034. The overall averages are also shown. It is this overall average which is used as the average raw waste load from the copper sulfate process in various calculations.

Based on the total annual production rate of this subcategory and the average waste load generated per unit product, the estimated total pollutant raw waste loads generated each year for this subcategory are as follows:

Pollutant	Waste Load (kg/year)
Antimony	26
Arsenic	1400
Cadmium	74
Chromium	15
Copper	124,000
Lead	30
Nickel	6200
Zinc	700

TABLE 21-6. RAW WASTE DATA

Subcategory: Copper Sulfate

Average Daily Pollutant Concentrations and Loadings found during Sampling of Plant #034[1]

Pollutant	Screening[2] (mg/l) (kg/kkg of $CuSO_4 \cdot 5H_2O$)	Verification[3] (mg/l) (kg/kkg of $CuSO_4 \cdot 5H_2O$)	Overall Average[4] (mg/l) (kg/kkg of $CuSO_4 \cdot 5H_2O$)
TOXIC			
Antimony, Sb	0.31 0.00069	0.54 0.0012	0.44 0.00095
Arsenic, As	3.5 0.0078	44.0 0.097	24.0 0.052
Cadmium, Cd	0.87 0.0019	1.6 0.0035	1.2 0.0027
Copper, Cu	1900 4.2	2200 5.0	2000 4.5
Lead, Pb	0.18 0.00039	0.78 0.0018	0.48 0.0011
Nickel, Ni	110 0.25	91.0 0.20	102 0.23
Zinc, Zn	11.0 0.024	12.0 0.027	12.0 0.026
Chromium, Cr	0.14 0.000030	0.36 0.000080	0.25 0.00055
Selenium, Se	< 0.011 < 0.000024	< 0.0050 < 0.000011	< 0.008 < 0.000018
CONVENTIONAL			
TSS	39.0 0.087	790 1.80	410 0.92

(1) The methodology of the sampling program is described in Section 5.1.2, and Section 21.1.2 presents the scope of sampling in the Copper Sulfate industry.

(2) Screening data from one 72-hour grab composite sample of individual or combined raw waste streams.

(3) Verification data from three 24-hour grab composite samples, averaged.

(4) When averaging values indicated as "less than" (<), the absolute value was used and the resulting average was indicated as a "less than" value.

21.4 POLLUTION ABATEMENT OPTIONS

21.4.1 Toxic Pollutants of Concern

The principal pollutant of concern is copper. The other toxic pollutants found in plant waste waters are closely related to the purity of the copper and acid sources. The heavy metals; cadmium, nickel, zinc and, to a lesser extent, antimony, chromium and lead, which were found during field sampling, may originate as trace impurities in copper scrap and other copper sources. Plants utilizing pure copper shot would not experience a buildup of these impurities in the mother liquor, and consequently would not generate a waste stream containing these impurities. Arsenic was also found in fairly high concentrations in the raw waste water. A possible source of arsenic, and other copper ore trace metals, is the use of sulfuric acid made from sulfur dioxide produced in the roasting of copper sulfide ore. 1,1,1-trichloroethane was found and several other trace organic toxic pollutants were found in the raw waste at Plant #034 which contains infiltrated ground water. The general area around Plant #034 is heavily industrialized. The local ground water is known to be contaminated with various organic compounds. Since there are no known organic compounds used in the feedstock, or copper sulfate process itself, the organic toxic pollutants found at Plant #034 are atypical and are related to the contaminated ground water. Selenium was not detected in the raw waste at Plant #034. However, the average concentration of selenium was 0.1 mg/l in the treated effluent for all sampling trips. This phenomenon was also observed in previous studies at this plant. The increase in selenium occurs in the treatment operation and the source is presently unknown. It is apparent that copper, arsenic, cadmium, chromium, lead, antimony, nickel and zinc are typical pollutants encountered in copper sulfate waste waters, and that selenium appears only in the effluent after lime treatment.

21.4.2 Process Modifications and Technology Transfer Options

Mechanical scrapers could be installed on filters in plants using impure raw materials. This would eliminate the need for backwashing and the waste water from this source would be eliminated. Installation of these scrapers would constitute a small capital cost.

21.4.3 Best Management Practices

The best technology available for the treatment of copper sulfate waste, where pure copper is used as the raw material, is total recycle of process waste. This would require floor dikes,

plumbing and sumps to segregate the wastes, and pumps and piping for recycle.

The best technology for waste treatment where copper sulfate is prepared from copper refinery by-product is collection of waste mother liquor and process spills, washdowns, etc., followed by lime precipitation of metals, settling of suspended solids and filtration. This would require installing dikes, sewers, a treatment tank, a settling tank, filter presses, and associated piping and pumps (2).

21.4.4 Prevailing Control and Treatment Practices

Plant #034 collects leaks, spills and washdown water in a basement sump and pumps it to holding tanks having a combined volume of 6000 gallons. The batch is treated using lime neutralization and precipitation and is filtered by a filter press. The filtrate, after mixing with other streams, is polished further by passing through a cloth filter and is finally discharged to a sewer. The filter cake is hauled to a landfill.

Plant #284 sends mother liquor purges and filter sludges to other processes. Waste waters from maintenance and dust control are combined with a multitude of other process wastes and treated by lime neutralization with aeration, followed by clarification before discharge.

Plant #069, which produces a reagent grade product, sends periodic purges and washdown water to a combined collection system with waste water from various other products. Treatment consists of neutralization and equalization of the wastes and discharge to a POTW.

Plant #313 also combines its waste waters from copper sulfate production with wastes from various other metal processes and presently discharges the combined waste, after settling, to a pond. A treatment system is being designed which uses lime precipitation at pH 10 followed by gravity separation and centrifugation to thicken the sludge. The waste will then be neutralized to pH 6.5-7.5 and discharged.

Plants #100, #969, #050, #458, #885 and #571 have no discharge of waste water from the copper sulfate process.

21.4.5 Advanced Treatment Technologies

Copper, nickel, cadmium and zinc can be separated from solution by alkaline precipitation at pH values from 7.2 (copper) to 9.7 (cadmium). Alternatively, sulfide precipitation

can be used. These metals can also be removed from clarified solutions by ion exchange, but the metal ions remaining on the exchange resins or in the regenerant solutions may create additional disposal problems. Removal of trace metal concentrations by the xanthate process, although possible, has not been used widely. Some reduction of arsenic concentrations at high pH levels has been reported, although the removal mechanism is not clear. More effective arsenic removal would require the addition of ferric chloride during alkaline or sulfide precipitation of the process wastes.

21.5 SELECTION OF APPROPRIATE TECHNOLOGY AND EQUIPMENT

21.5.1 Technologies for Different Treatment Levels

Level 1 (BPT)

Alkaline precipitation using caustic soda in a batch process was considered as the most effective technology for removal of heavy metals and arsenic. The Agency selected Level 1 treatment as the basis for BPT because it represents the prevailing treatment practice in this industry. All direct dischargers have BPT installed. To accommodate a 40-hour, five-day production schedule, the wastes are received in daily batches, and are raised to pH 10, mixed and settled. At the end of the workweek, the batch is filtered and the pH adjusted to a range of 6 to 9.

Level 2

Ferrous sulfide is added in the reaction vessel following alkaline precipitation, to increase the precipitation of trace metals.

Figures 21-3 and 21-4 show schematic flow diagrams for the two levels of treatment.

21.5.2 Equipment for Different Treatment Levels

Equipment Functions

At both levels the models are designed for batch operation. Each day's wastes are transferred from holding sumps to a reaction vessel for storage. At the end of a workweek the BPT treatment of the accumulated waste consists of raising the pH to 10 with caustic soda, mixing, and applying filter aid while filtering in a filter press. After pH adjustment to the 6 to 9 range, the filter effluent is discharged. In the Level 2 model

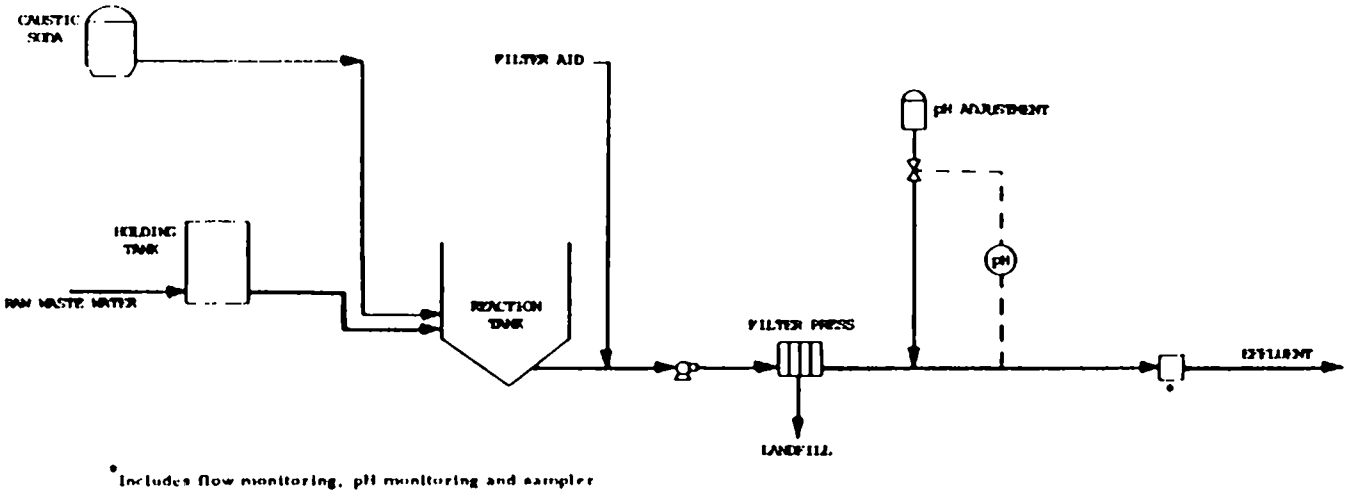

Figure 21-3. Level 1 waste water treatment for copper sulfate subcategory - batch process.

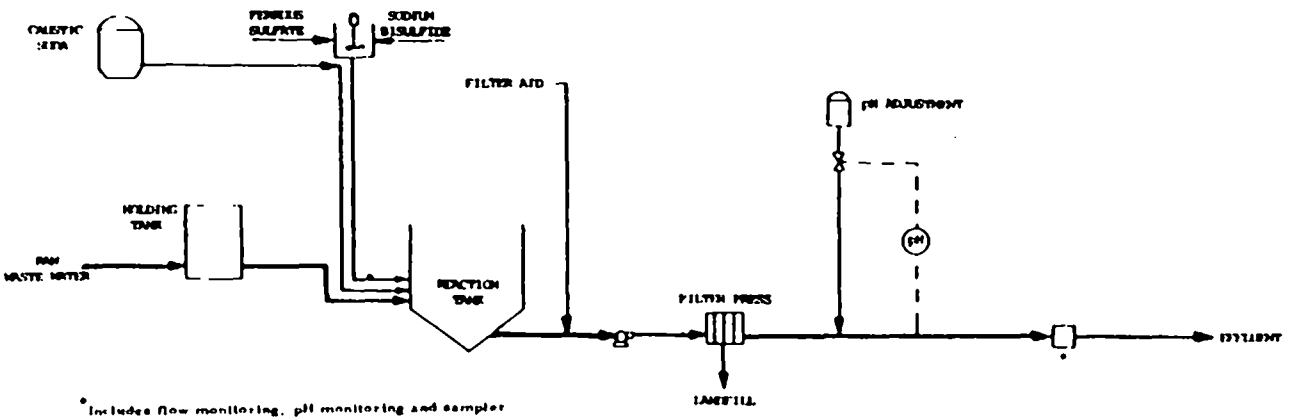

Figure 21-4. Level 2 waste water treatment for copper sulfate subcategory - batch process.

the equipment remains the same but precipitation is accomplished in two steps. Metallic hydroxides are allowed to form and settle in the bottom of the reaction vessel. Then ferrous sulfide is mixed in the reactor with residual metals. Following completion of sulfide precipitation, filter aid is added while the mixture is being filtered through a filter press. As in Level 1, the pH is adjusted and the filter effluent is discharged until the weekly batch is exhausted.

Chemicals Used and Handling Precautions

Caustic soda solution is added manually to each batch until the proper pH level is reached. In Level 2, batches of ferrous sulfide are prepared by mixing ferrous sulfate and sodium bisulfide in a well-ventilated area. Inert filter aid is applied as a filter precoat and is added continuously during the filtering process. With normal precautions there are no special chemical handling problems in the treatment of copper sulfate wastes.

Separation and Removal of Solids

All solids in both levels are collected as filter cake in the filter press. At both levels the dewatered cake containing metallic hydroxides, metallic sulfides, and spent filter aid is hauled to an off-site chemical landfill.

Monitoring Requirements

Alkaline precipitation of the heavy metals is assured by bringing the reaction vessel contents to the proper pH, as determined by the operator, using field pH equipment. Periodic specific analyses of the final effluent for toxic pollutants can be made by atomic absorption methods through a commerical laboratory.

21.6 TREATMENT COST ESTIMATES

21.6.1 General Discussion

To prepare treatment cost estimates, a model plant concept was developed. The proposed BPT model treatment consists of:

A. Collection of waste waters in a batch according to the production mode.

B. Hydroxide treatment to precipitate metals, followed by settling and filtration.

C. pH adjustment before discharge.

Production

Copper sulfate production ranges from 45 kkg/yr to 9100 kkg/yr in ten plants for which 308 Questionnaires were available. The average of the ten plants is 2100 kkg/yr and the median production is 790 kkg/yr. The operational mode for all these plants is assumed to be batch and to run 250 days per year.

For waste water treatment cost estimates, one production level was chosen as the model plant. This is the average production of 2100 kkg/year. One production level is sufficient because the waste waters will be collected in batches and treated as necessary when the batch tanks are full. The amount of waste water to be treated at any one time is then independent of the production rate, although it will determine the frequency of treatment. All known plants with production rates below the model plant rate have no discharge of waste waters from the copper sulfate process.

Waste Water Flow

The data on Table 21-4 for plants with a waste water discharge shows a unit flow range from 0.52 m3/kkg of $CuSO_4$ to over 23 m3/kkg of $CuSO_4$. One plant flow is for reagent grade $CuSO_4$ and so cannot be considered a normal waste flow. Only Plant #034 has separate treatment for $CuSO_4$ waste water, and the flow is the median of those normal processes sending waste water for treatment. The waste water unit flow used for the model plant is 0.94 m3/kkg of $CuSO_4$. All the other plants except #034 have either no discharge of waste water, combine their wastes with other process wastes.

Solid Wastes

Copper sulfide from filtration is the only solid waste that requires disposal. This waste must be disposed of in a chemical landfill since the solids may contain other contaminants or become oxidized and begin to migrate into the soil or ground water. Slimes from the mother liquor and copper sulfate solid wastes are all recycled or sent to another facility for precious metal recovery.

Treatment Chemicals

Caustic soda is required to precipitate metals and for pH adjustment. For the model plant, the assumed caustic soda dosage was 0.33 kg/kkg of copper sulfate.

Solids Generated

Based on sludge production of 5 lbs/day for 250 days/yr in the model plant, the annual solids production is 558 kg, equivalent to unit solids generation of 0.27 kg/kkg of product.

21.6.2 Model Plant Cost Estimates

The cost estimate of the model plant having two levels of treatment and one level of production is presented in Table 21-7. Table 21-8 gives a summary of the unit cost distribution between amortization and operation and maintenance cost components at two levels of treatment.

Cost estimates developed for the first level of treatment indicate that amortization and labor constitute a major portion of the annual costs. At the second level of treatment there is insignificant change in the annual costs.

21.7 BASIS FOR REGULATIONS

21.7.1 Evaluation of BPT Treatment Practices

Copper sulfate can be manufactured using pure copper as the raw material or an impure copper raw material. Waste loads emanating from the two sources differ greatly in that total recycle of process wastes can be accomplished at plants using a pure copper source, while at plants using an impure raw material, waste streams need to be removed to some extent to avoid build-up of contaminants in the process.

Based on the process technology of total recycle at plants in this study using pure raw material, the industry practices indicate that the degree of waste control attainable is zero discharge of process wastes.

Pollutant Removal with BPT Treatment

BPT technology for copper sulfate plants utilizing impure raw materials is equivalent to Treatment Level 1. Table 21-9 presents a summary of long term effluent monitoring data for Plant #034 on total suspended solids (TSS), copper, nickel, zinc, arsenic and selenium. Means, standard deviations, and variability factors are given where sufficent data are available. These performance characteristics are later utilized for the development of the proposed regulations.

Table 21-10 presents the toxic and conventional pollutant data for effluent from the two samplings at Plant #034 in the

TABLE 21-7. MODEL PLANT TREATMENT COSTS

Subcategory: Copper Sulfate

Production 2,100 metric tons per year[1] (2310 tons per day)[1]
8.4 metric tons per day (9.25 tons per day)
Waste water flow 7.9 cubic meters per day

	LEVEL OF TREATMENT *	
A. INVESTMENT COST	FIRST	SECOND
Construction.....	$9,200	$200
Equipment in place, including piping, fittings, electrical work and controls.....	53,000	1,000
Monitoring equipment in place.....	9,000	
Engineering design and inspection.....	14,240	240
Incidentals, overhead, fees, contingencies...	1,200	
Land.....		
TOTAL INVESTMENT COST	$100,880	$1,680
B. OPERATION AND MAINTENANCE COST		
Labor and supervision..	$8,000	
Energy.....	15	
Chemicals.....	1,000	30
Maintenance.....	9,968	168
Taxes and insurance....	3,026	50
Residual waste disposal.....	100	
Monitoring, analysis and reporting.....	2,500	1,250
TOTAL OPERATION AND MAINTENANCE COST	$24,609	$1,498
C. AMORTIZATION OF INVESTMENT COST	$16,217	$273
TOTAL ANNUAL COST	$40,826	$1,771

(1) Production based on 250 days per year.

* First level represents the base cost of treatment system. Other levels represent the incremental cost above base cost.

TABLE 21- 8. MODEL PLANT TREATMENT COSTS

Subcategory COPPER SULFATE

COST ITEM	PRODUCTION (kkg/yr)	FLOW (m^3/day)	Annual Treatment Costs ($/kkg) LEVEL OF TREATMENT FIRST	SECOND	THIRD	FOURTH
Annual Operation and Maintenance	2,045	8	12.03	0.73	Not Applicable	
Annual Amortization	2,045	8	7.93	0.13		
Total Cost	2,045	8	19.96	0.87		

TABLE 21-9. SUMMARY OF LONG TERM MONITORING DATA FROM PLANT #034 (1)

Pollutant	Number of Months	Long Term Averages (mg/l)	Long Term Averages (kg/kkg)	VF (2)
Total Suspended Solids (TSS)	16	25.0	0.093	2.4
Copper	16	4.4	0.016	1.6
Nickel	16	0.36	0.0013	2.2
Zinc	16	0.12	0.00044	2.4
Arsenic	16	0.0012	0.0000044	3.4
Selenium	15	0.0073	0.000027	6.2
Lead	16	0.033	0.00012	2.5

(1) Values are for monthly measurements of the treated effluent combined with noncontract cooling water and steam condensate discharges.

(2) For 30-day average measurements, a normal distribution is obtained and the variability factor is found by the expression, $VF = 1.0 + Z\left(\frac{S}{\bar{X}}\right)$ where $\bar{X}$ is the arithmetic mean and S is the arithmetic standard deviation. When the value of Z is 1.64, the variability factor is for 95 percentile which is used to set the proposed maximum 30-day average effluent limitation. Refer to Section 8.2 for detailed discussion.

TABLE 21-10. TREATED EFFLUENT DATA

Subcategory: Copper Sulfate

Average Daily Pollutant Concentrations and Loadings Found During Sampling of Plant #034(1)

Toxic Pollutants	Screening(2) (mg/l)	Verification(3) (kg/kkg of $CuSO_4 \cdot 5H_2O$)	Overall Average(4)
Antimony	0.036 0.00008	0.12 0.00027	0.08 0.00018
Arsenic	< 0.02 < 0.00004	0.057 0.00013	0.038 0.000085
Cadmium	0.001 0.000002	0.0042 0.0000089	0.0026 0.0000054
Chromium	0.005 0.00001	0.017 0.000038	0.011 0.000024
Copper	4.6 0.010	1.9 0.0042	3.3 0.0072
Lead	0.005 0.00001	< 0.031 < 0.000069	< 0.018 0.00004
Nickel	0.24 0.00053	0.17 0.00038	0.20 0.00046
Zinc	0.016 0.000036	0.02 0.000044	0.018 0.00004
Selenium	0.10 0.00022	0.11 0.00024	0.10 0.00023
Conventional Pollutant			
TSS	35.0 0.078	13.7 0.03	24.0 0.054

(1) The effluent data presented here corresponds to the raw waste data shown in Table 21-6. The methodology of the sampling program is described in Section 5.1.2, and the scope of sampling in the industry is described in Section 21.3.3 Copper Sulfate.

(2) Screening data from one 72-hour grab composite sample of treated effluent.

(3) Verification data from three 24-hour grab composite samples, averaged.

(4) When averaging values indicated as "less than" (<), the absolute value was used and the resulting average was indicated as a "less than" value.

same manner as Table 21-6 did for raw waste data. The ability of BPT treatment to remove toxic pollutants can be estimated by comparing the overall averages from Table 21-6 and 21-10. This comparison is presented in Table 21-11 which also expresses the removal efficiency as the calculated average percent removal observed at this plant.

Table 21-11 shows that the treatment efficiency for removal of copper, nickel, arsenic, cadmium and zinc is above 99.5 percent, while removal efficiency for lead and chromium is above 95 percent and removal for antimony is just slightly over 80 percent. The toxic pollution concentrations were at or below the lower limit of concentration achieved by alkaline precipitation with the exception of copper and nickel. These toxic metal pollutants comprised the majority of the treatment loading which suggests that the optimum conditions for metal hydroxide formation were not being attained at the time of sampling. The thirteenfold increase in selenium concentrations is the treated effluent should be noted. This phenomenon was observed in previous studies at this and other plants. The observed concentrations appear to remain at the lowest achievable concentration for alkaline precipitation. The source is presently unknown, but it is suggested, that the selenium may be introduced in the treatment chemicals.

Treatment system performance data was unavailable for other facilities generating a waste discharge because they combine their wastes with other process wastes for treatment.

21.7.2 Basis for Proposed BPT Effluent Limitations

The BPT regulations for the Copper Sulfate Subcategory were promulgated in 40 CFR 415.363 (see Table 21-2). The technology basis for the existing BPT is equivalent to alkaline precipitation plus filtration and final pH adjustment before discharge. Of the 16 plants in this subcategory, fifteen are direct dischargers, one is an indirect discharger. All direct dischargers have BPT technology installed.

In the original BPT regulations, the Agency had different limitations for pure and impure raw materials processes. The Agency is eliminating this distinction for BPT and is not proposing different limits for these processes in the proposed BAT, NSPS, PSES and PSNS regulations. This is because both processes are adequately covered by one regulation and only the impure raw material process needs to be regulated. Pure raw material producers will continue their no discharge practice.

TABLE 21-11. AVERAGE POLLUTANT LEVELS AND REMOVAL EFFICIENCY FOR PLANT #034

Subcategory: Copper Sulfate

Waste Water Flow = 1.25 m^3/kkg

Pollutant	Raw Waste (mg/l)	Raw Waste (kg/kkg)	Treated Effluent * (mg/l)	Treated Effluent * (kg/kkg)	Percent Removal
TSS	410	0.92	24.0	0.054	94
Copper	2000	4.5	3.3	0.0072	99 +
Nickel	102	0.23	0.20	0.00046	99 +
Antimony	0.44	0.00095	0.08	0.00018	81.6
Arsenic	24.0	0.052	0.038	0.000085	99 +
Cadmium	1.2	0.0027	0.0026	0.0000054	99 +
Chromium	0.25	0.00055	0.011	0.000024	96
Lead	0.48	0.0011	< 0.018	0.00004	96
Selenium	< 0.008	0.000018	0.10	0.00023	Effluent > Influent
Zinc	12.0	0.026	0.018	0.00004	99 +

* Before combining with noncontact cooling and steam condensate streams.

21.7.3 Basis for Proposed BCT Effluent Limitations

BCT was set equal to BPT because treatment technology for BPT is the same as technology for BAT. This regulation is applicable only to total suspended solids (TSS).

21.7.4 Basis for Proposed BAT Effluent Limitations

Technology Basis

For BAT, the Agency is proposing limitations based on BPT technology. However, the Agency has found that the actual performance of the treatment technology is not the same as indicated in the original BPT study. Consequently, the proposed limitations are taken from this new study.

The data from the current study was collected when the filter in the treatment system was not operating properly. Thus, the basis for the BAT limitations is published treatability data. The Agency is examining the performance of this technology by means of treatability studies, the results of which will be available before the regulation is promulgated. The Agency considered control treatment Level 2 (sulfide precipitation), but rejected this treatment because it removes only a small additional amount of toxic metals and is not cost effective. Therefore Level 1 was also established as the BAT treatment level; BPT and BAT treatment technology are the same.

Flow Basis

The model plant BPT treatment system is based on an inflow rate of 0.94 m3/kkg. This is derived from the average flow of Plant #034, and was the median of plants with a waste water discharge from industrial grade CuSO4 manufacturing processes. Other plants with waste water discharges combine their waste with other processes for treatment. All other plants either produce reagent grade product, have no treatment, or have no discharge.

Selection Basis for Pollutants to be Regulated

The selection of pollutants for which numerical effluent limitations are proposed was based on an evaluation of raw waste data from the screening and verification sampling program. The two major factors considered were: 1) individual raw waste concentrations, and 2) the total subcategory raw waste loadings.

Raw waste pollutant concentrations - A tabular summary of maximum raw waste concentrations found in sampling is presented in Section 21.3.3. Data from screening sampling was used to determine the need for verification sampling. The maximum

concentrations found during both screening and verification are shown for comparison. As previously discussed selenium was not found in the raw waste although it was present in the effluent. For each pollutant, the maximum concentration observed gave a preliminary indication of its potential significance in the subcategory. On this basis, the preliminary selection of candidates for regulation include copper, nickel, zinc, arsenic, cadmium, antimony, 1-1-1, trichloroethane and lead in decreasing order of their apparent pollution potential. These pollutants were observed at least once during screening at concentrations considered treatable in the industry using one of the available treatment technology options. The source of trichloroethane is known to be ground water contamination. It is not process related, and was not considered for verification. In verification, the same metals found during screening appeared along with the addition of chromium. The other metals found exhibited maximum concentrations that were considerably lower than those treatable by available technologies.

Total subcategory raw waste pollutant loadings - Pollutant raw waste loading data were used to evaluate the overall magnitude of the pollution potential for the subcategory. Data from the plant sampled are summarized in Table 21-6. This information, coupled with the estimated total copper sulfate production rate of 27,300 kkg/year, yielded the approximate total annual pollutant loading rates for the subcategory shown in Section 21.3.3. This method of ranking the pollution potential of the observed toxic metals confirms the dominance of the eight toxic metals and ranks them as copper, nickel, arsenic, zinc, cadmium, lead, antimony and chromium in terms of both total mass loading and treatable raw waste concentrations. The existing interim final BPT regulations included selenium limitations, although selenium was not found to be a significant pollutant in raw wastes at Plant #034. However, its continued presence in the effluent from alkaline treatment in significant concentrations indicates that selenium will continue to be included in the pollutants to be regulated.

Basis of Pollutant Limitations

Toxic Pollutants - The effluent limitations proposed for the selected toxic pollutants are derived primarily from literature based treatability estimates (Section 8.1). This is necessary because plant performance data from long-term monitoring (Table 21-9) and screening and verification sampling (Table 21-10) do not reflect optimum operation of a BPT system for removal of copper and nickel.

A. Copper: In Table 8-11, BPT technology shows an effluent quality range of 0.10 to 0.70 mg/l. The average of this range (0.40 mg/l) was used as the performance average to

allow for variations in pH. This is supported by Table 8-3 as the effluent quality achieved using normal doses of lime (41). The concentration of 0.40 mg/l was used as the basis to calculate the maximum 30-day average effluent limitation of 0.00038 kg/kkg. This was calculated as follows:

$$(0.40\ mg/l)(0.94\ m3/kkg)\left(\frac{kg/m3}{1000\ mg/l}\right) = 0.00038\ kg/kkg$$

Since complete long-term monitoring data on copper is unavailable for the copper sulfate industry, the variability factor of 1.9 was selected on the basis of copper monitoring data from the treatment of waste from the titanium dioxide-chloride process manufacturing at Plant #172. These are presented in Tables A-8b and A-8d in Appendix A. This is justififed by the similarity in chemistry and BPT technology. Thus, the variability factor ratio is:

$$VFR = \frac{VF\ of\ daily\ measurement}{VF\ of\ 30\text{-}day\ averages} = \frac{5.20}{2.74} = 1.9$$

and the daily maximum limitation for copper is:

$$(1.9)(0.00038\ kg/kkg) = 0.00072\ kg/kkg$$

The proposed effluent limitations on copper, and the other toxic pollutants of concern are given in Table 21-12.

B. Nickel: The verification sampling data shows an average level of 0.17 mg/l in treated waste waters. The literature treatability data indicate that a concentration of 0.10 mg/l is acheivable with a properly operating filter. Thus 0.10 mg/l is used as the concentration basis for the proposed maximum 30-day average effluent limitation of 0.000094 kg/kkg. A VFR of 1.9 was used following the same rational as copper. Thus, the proposed maximum 30-day average limitation is:

$$(0.10\ mg/l)(0.94\ m3/kkg)\left(\frac{kg/m3}{1000\ mg/l}\right) = 0.000094\ kg/kkg$$

and the daily maximum limitation is:

$$(1.9)(0.000094\ kg/kkg) = 0.00018\ kg/kkg$$

C. Selenium: Long term monitoring and sampling data indicate effluent quality either at or below the lower limit of estimated treatability according to literature data. For this reason, the lowest acheivable concentration of 0.1 mg/l is selected as the concentration basis for the proposed maximum 30-day average effluent limitation which is:

$$(0.10\ mg/l)(0.94\ m3/kkg)\left(\frac{kg/m3}{1000\ mg/l}\right) = 0.000094\ kg/kg$$

TABLE 21-12. PROPOSED LIMITATIONS
Copper Sulfate
Best Available Technology (3)
Waste Water Flow: 0.94 m^3/kkg

Pollutant	Treatability (1) (mg/l)	VFR (2)	Concentration Basis mg/l Max 30-day Avg.	Concentration Basis mg/l Max 24-hr Max	Effluent Limit kg/kkg Max 30-day Avg	Effluent Limit kg/kkg Max 24-hr Max
Copper	0.10	1.9	0.40	0.76	0.00038	0.00072
Nickel	0.15	1.9	0.10	0.19	0.000094	0.00018
Arsenic	0.50	1.9	0.50	0.95	0.00047	0.00089
Selenium	0.10	1.9	0.10	0.19	0.000094	0.00018
Cadmium	0.050	1.9	0.050	0.095	0.000047	0.000089
Zinc	0.40	1.9	0.40	0.76	0.00038	0.00072
Chromium	0.050	1.9	0.050	0.095	0.000047	0.000089
Lead	0.050	1.9	0.050	0.095	0.000047	0.000089
Antimony	0.40	1.9	0.40	0.76	0.00038	0.00072

(1) - The lower limit of the literature treatability estimate (Table 8-11) is used as the basis for the 30-day average limitation.

(2) - VFR: ratio of the 24-hour variability factor to the 30-day variability factor.

(3) - Also proposed for NSPS, PSES, and PSNS regulations.

A VFR of 1.9 was used following the same rationale as copper. Thus the daily maximum effluent limitation is:

$$(1.9)(0.000094 \text{ kg/kkg}) = 0.00018 \text{ kg/kkg}$$

D. Arsenic: The concentration basis for the proposed maximum 30-day average effluent limitation on arsenic was set at 0.5 mg/l in accordance with literature treatability data. The observed effluent concentrations were below those acheivable using BPT technology. For this reason, the lower limit of the treatability range in Table 8-11 is used as the concentration basis. A VFR of 1.9 was used following the same rationale described for copper. Thus, for arsenic, the proposed maximum 30-day average limitation is:

$$(0.50 \text{ mg/l})(0.94 \text{ m3/kkg})\left(\frac{\text{kg/m3}}{1000 \text{ mg/l}}\right) = 0.00047 \text{ kg/kkg}$$

and the daily maximum is:

$$(1.9)(0.00047 \text{ kg/kkg}) = 0.00089 \text{ kg/kkg}$$

E. Cadmium: The concentration basis for the proposed maximum 30-day average effluent limitations on cadmium was set at 0.05 mg/l using the same rationale described for arsenic. A VFR of 1.9 was used following the same rationale described for copper. Thus, for cadmium, the proposed maximum 30-day average limitation is:

$$(0.050 \text{ mg/l})(0.94 \text{ m3/kkg})\left(\frac{\text{kg/m3}}{1000 \text{ mg/l}}\right) = 0.000047 \text{ kg/kkg}$$

and the daily maximum is:

$$(1.9)(0.00047 \text{ kg/kkg}) = 0.00089 \text{ kg/kkg}$$

F. Zinc: A concentration of 0.40 mg/l is the basis for the proposed maximum 30-day average effluent limitations on zinc following the same rationale described for arsenic. A VFR of 1.9 was used following the same rationale described for copper. Thus, for zinc, the proposed maximum 30-day average limitation is,

$$(0.40 \text{ mg/l})(0.94 \text{ m3/kkg})\left(\frac{\text{kg/m3}}{1000 \text{ mg/l}}\right) = 0.00038 \text{ kg/kkg}$$

and the daily maximum limitation is:

$$(1.9)(0.00038 \text{ kg/kkg}) = 0.00072 \text{ kg/kkg}$$

G. Chromium: A concentration of 0.050 mg/l is the basis for the proposed maximum 30-day average effluent limitations on chromium following the same rationale described for arsenic. A

VFR of 1.9 was used following the same rationale described for copper. Thus, for chromium, the proposed maximum 30-day average limitation is:

$$(0.050\ mg/l)(0.94\ m3/kkg)\left(\frac{kg/m3}{1000\ mg/l}\right) = 0.000047\ kg/kkg$$

and the daily maximum is:

$$(1.9)(0.000047\ kg/kkg) = 0.000089\ kg/kkg$$

H. Lead: The concentration basis for the proposed maximum 30-day average effluent limitations on lead was set at 0.050 mg/l following the same rationale described for arsenic. A VFR of 1.9 was used following the same rationale described for copper. Thus, for lead, the proposed maximum 30-day average limitation is:

$$(0.050\ mg/l)(0.94\ m3/kkg)\left(\frac{kg/m3}{1000\ mg/l}\right) = 0.000047\ kg/kkg$$

and the daily maximum limitation is:

$$(1.9)(0.000047\ kg/kkg)\left(\frac{kg/m3}{1000\ mg/l}\right) = 0.000089\ kg/kkg$$

I. Antimony: The concentration basis for the proposed maximum 30-day average effluent limitations on antimony was set at 0.40 mg/l following the same rationale described for arsenic. A VFR of 1.9 was used following the same rationale described for copper. Thus, for antimony, the proposed maximum 30-day average limitation is:

$$(0.40\ mg/l)(0.94\ m3/kkg)\left(\frac{kg/m3}{1000\ mg/l}\right) = 0.00038\ kg/kkg$$

and the daily maximum limitation is:

$$(1.9)(0.00038\ kg/kkg) = 0.00072\ kg/kkg$$

Table 21-13 presents estimated achievable effluent limitation through implementation of the Level 2 technology . The concentration basis for Level 2 concentrations is the lower limit acheivable based on the literature treatability data in Table 8-11. The VFR is based on data from similar treatment performance.

21.7.5 Basis for Proposed New Source Performance Standards

The Agency is proposing New Source Performance Standards (NSPS) based on treatment technology equivalent to BPT/BAT for the Copper Sulfate Subcategory. The conventional pollutant

TABLE 21-13. PERFORMANCE OF ALTERNATIVE TECHNOLOGY
Copper Sulfate
Level of Treatment: 2
Waste Water Flow: 0.94 m^3/kkg

Pollutant	Treatability[1] (mg/l)	VFR[2]	Concentration Basis mg/l Max 30-day Avg	24-hr Max
Toxic Pollutants				
Copper	0.05	2.0	0.05	0.1
Nickel	0.1	2.0	0.1	0.2
Arsenic	0.05	2.0	0.05	0.1
Selenium	0.1	2.0	0.1	0.2
Cadmium	0.01	2.0	0.01	0.02
Zinc	0.2	2.0	0.2	0.4
Chromium	0.05	2.0	0.05	0.1
Lead	0.1	2.0	0.1	0.2
Antimony	0.4	2.0	0.4	0.8

(1) - The lower limit of the literature treatability estimate (Table 8-11) is used as the basis for the 30-day average limitation.

(2) - VFR: ratio of the 24-hour variability factor to the 30-day average variability factor.

parameters to be limited are pH and TSS as shown for the existing BPT (BPCTCA) regulations in Table 21-2. The toxic pollutant parameters to be regulated are those identified in the development of the proposed BAT regulations as shown in Table 21-12 and the specific numerical limitations proposed for NSPS are identical to those indicated for BAT.

21.7.6 Basis for Proposed Pretreatment Standards

There is an existing PSES regulation, 40 CFR 415.364, which is based on BPT. The Agency is proposing to amend that section in these regulations based on setting PSES equal to proposed BAT and is also proposing PSNS regulations be equal to BAT.

SECTION 22

NICKEL SULFATE INDUSTRY

22.1 INDUSTRIAL PROFILE

22.1.1 General Description

Most of the nickel sulfate produced is sold in the merchant market. The major use of nickel sulfate is in the metal plating industry, but is also used in the dyeing and printing of fabrics, and for producing a patina on zinc and brass.

The industry profile data summary is given in Table 22-1, while the status of regulations is summarized in Table 22-2.

22.1.2 General Process Description and Raw Materials

Nickel sulfate is produced by reacting various forms of nickel with sulfuric acid. The general reaction is:

$$NiO + H_2SO_4 = NiSO_4 + H_2O \qquad (1)$$

Two different raw materials are used to produce nickel sulfate. Pure nickel or nickel oxide powder may be used as a pure material source, while spent nickel catalysts, nickel plating solutions or residues are impure sources.

The nickel sulfate produced when pure raw materials are used is filtered and sold or processed further. This is done by heating the solution to 300°C in a crystallizer to produce a solid nickel sulfate product. This must be classified, dried, and screened before it is ready for sale.

The use of impure raw materials produces a nickel sulfate solution which must be treated sequentially with oxidizers, lime, and sulfides to precipitate impurities which are then removed by filtration. The nickel sulfate solution can be sold or it may be crystallized, and the crystals classified, dried,

TABLE 22-1. SUBCATEGORY PROFILE DATA SUMMARY

SUBCATEGORY NICKEL SULFATE	
Total subcategory capacity rate (1)	Indeterminant
Total subcategory production rate (1)	6,350
Number of plants in this subcategory (2)	11
308 Data on file for	6
With total capacity of	17,700 kkg/year
With total production of	12,650 kkg/year
Representing capacity	NA
Representing production	NA
Plant production range:	NA
Minimum	45 kkg/year
Maximum	5,900 kkg/year
Average production	2,100 kkg/year
Medium production	1,600 kkg/year
Average capacity utilization	71.5
Plant age range:	
Minimum	3
Maximum	48
Waste water flow range:	
Minimum	1.5 cubic meters/day
Maximum	17.0 cubic meters/day
Volume per unit product:	
Minimum	0.42 cubic meters/kkg
Maximum	0.72 cubic meters/kkg

(1) = "Economic Analysis of Proposed Revised Effluent Guidelines and Standards for the Inorganic Chemicals Industry," March, 1980.

(2) = Sources of data are Stanford Research Institute, Directory of Chemical Producers, U.S.A., 1977

NA = Not Available

TABLE 22-2. STATUS OF REGULATIONS - EFFLUENT LIMITATION GUIDELINES

SUBCATEGORY Nickel Sulfate

SUBPART AU (40 CFR 415.470, 5/22/75)

		STANDARDS					
		BPCTCA		BATEA		NSPS	
Product Process	Parameters	Max.[1] kg/kkg (mg/l)	Avg.[2] kg/kkg (mg/l)	Max. kg/kkg (mg/l)	Avg. kg/kkg (mg/l)	Max. kg/kkg (mg/l)	Avg. kg/kkg (mg/l)
Pure Raw Materials	Ni	No discharge of pwwp[3]		No discharge of pwwp		No discharge of pwwp	
	TSS	No discharge of pwwp		No discharge of pwwp		No discharge of pwwp	
Impure Raw Materials	Ni	0.006	0.002				
	TSS	0.096	0.032				

[1]Max. = Maximum of any one day.

[2]Avg. = Average of daily values for thirty consecutive days.

[3]pwwp = Process wastewater pollutants.

and screened to produce solid nickel sulfate for sale. Figure 22-1 shows a general process flow diagram for the manufacture of nickel sulfate.

22.2 WATER USE AND WASTE SOURCE CHARACTERISTICS

22.2.1 Water Use

Noncontact cooling water is used for nickel sulfate production in the reactor and crystallizers, and constitutes the major water use. Water is used in direct process contact as a reaction component which becomes both part of the dry product as its water of crystallization, and evaporated to the atmosphere. Small amounts of water are used for maintenance purposes, washdowns, cleanups, etc., and several plants use water in scrubbers for dust control. Table 22-3 gives a summary of water usage for plants where information was available from 308 Questionnaires and previous documents.

22.2.2 Waste Sources

Noncontact Cooling Water

Noncontact cooling is the main source of waste water. This stream is usually not treated before discharge.

Direct Process Contact

Plants which use impure nickel raw materials generate a filter sludge which is treated as a solid waste. They also generate a small filter backwash waste stream with high impurity levels which must be treated before discharge. The filter sludges from processes using pure nickel can be recycled back to the process. Mother liquor, and waste water streams from dust control are also recycled back to the process.

Maintenance

Washdowns, cleanups, spills, and pump leaks are periodic streams and account for the remaining wastes produced by nickel sulfate plants.

Table 22-3 also shows the unit flow of total waste water generated from the nickel sulfate process at each plant where this information was available.

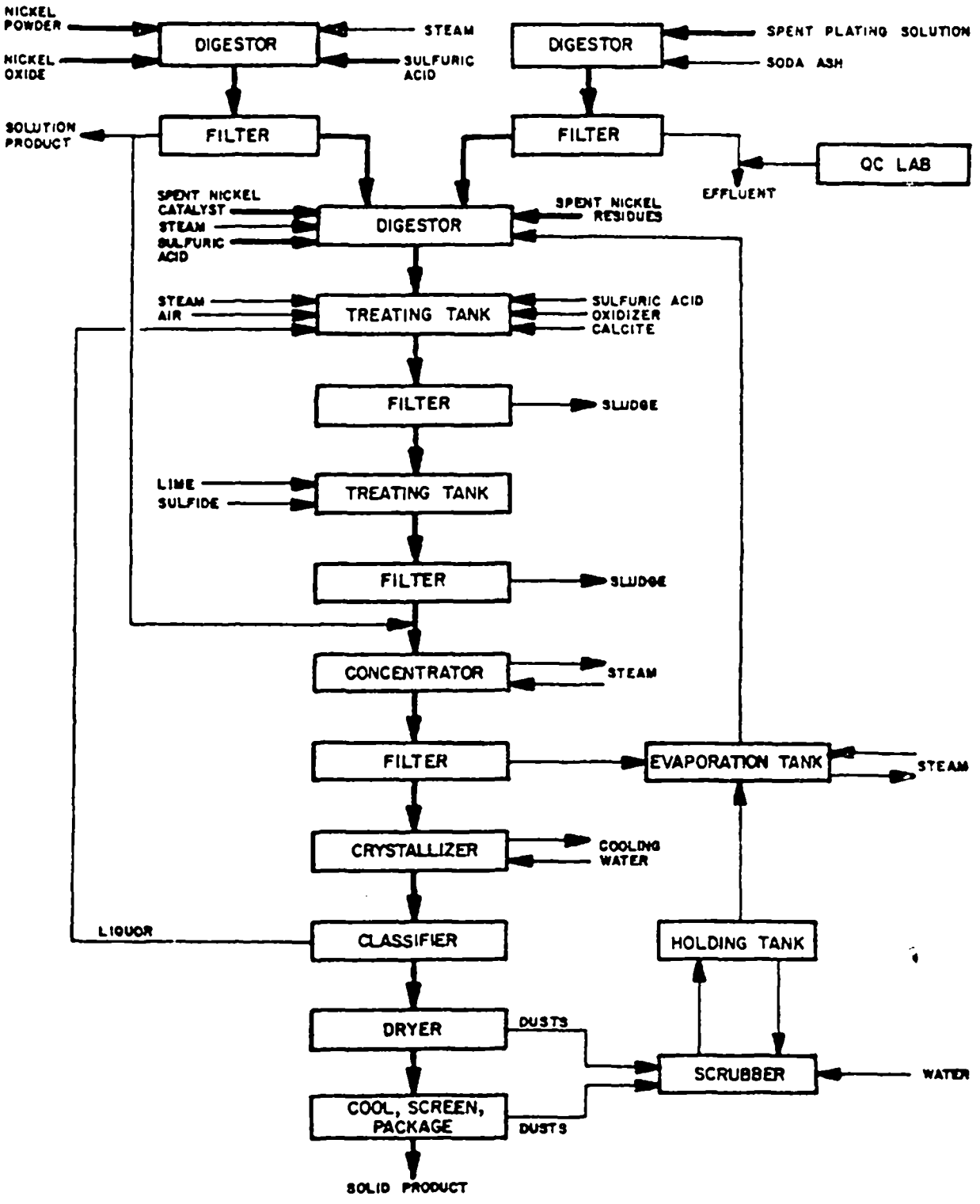

Figure 22-1. General process flow diagram for nickel sulfate manufacture.

TABLE 22-3. WATER USE IN THE NICKEL SULFATE SUBCATEGORY

	Water Uses at Plants (m3/kkg)					
Source	#313*	#069	#572	#369	#120	#603*
Direct Process Contact	24.8	0.0098	0.35	0.751	4.01	814
Noncontact Cooling Water	37.3	1.67	4.98	0.417	13.6	2035
Maintenance Cleaning and Washdowns, Pumps, Seals and Leaks	0.278	0.00196	0.896	0.094	Nil	Nil
Air Pollution Control	0.278	0	0.498	0.094	1.28	0
Waste Water:						
Waste Water Flow to Treatment	23.4 (1)	.0196 (1)	20.3 (1)*	0.42 (2)	0.72 (2)	NA

* = Flow data includes uses for other products.
(1)= Data source: 308 Questionnaires
(2)= Data source: Plant visits
NA = Not Available

22.3 DESCRIPTION OF PLANTS VISITED AND SAMPLED

22.3.1 Screening

Plant #369 was visited and process waste water and effluent samples were collected and analyzed for conventional and toxic pollutants. The process used at Plant #369 is similar to that described earlier and utilizes nickel oxide powder feedstock. Mother liquor is recycled back to the reactor. Sources of waste water consist of small quantities of mother liquor from the filter press, washdown water, leaks, and spills. Waste water from the process area is collected in a tank and treated as a batch by adjusting the pH to about 12.5 using sodium hydroxide. The precipitated metal hydroxides are allowed to settle, and the supernatant is decanted to another tank, checked for quality and discharged to a POTW. The sludge is hauled away to an approved landfill. Figure 22-2 shows a general treatment system flow diagram with the location of the sampling points. Table 22-4 gives data on flow, total suspended solids (TSS), and nickel and copper emissions for the waste streams sampled during screening.

22.3.2 Verification

Plants #572 and #120 were visited and sampled during the verification phase of the program. At Plant #572, pure nickel oxide is used as the raw feedstock. The waste water streams discharge on a batch basis and are collected together in a floor drain. The wastes consist of washdowns, leaks, and air scrubber water which are collected in an equalization tank. In the equalization tank, alkaline wastes from another process are mixed in and the pH is raised to 10. Solids are allowed to settle and the clear supernatant is discharged to a POTW.

Plant #120 uses nickel oxide powder and impure nickel as raw materials. Waste waters from the nickel sulfate process emanate from the filter wash, air scrubber, washdowns, and leaks, and are sent to the treatment system. The raw wastes are mixed with other plant nickel raw wastes prior to treatment. This consists of pH adjustment to precipitate nickel and other trace metals followed by sand filtration.

Figures 22-3 and 22-4 show the general treatment system flow diagram with the waste streams sampled for Plants #572 and #120, respectively. Table 22-4 also shows the waste stream flow and waste characteristics for both plants. The data for Plant #572 are presented on a concentration basis only, because a representative flow value for the sampling point was unavailable.

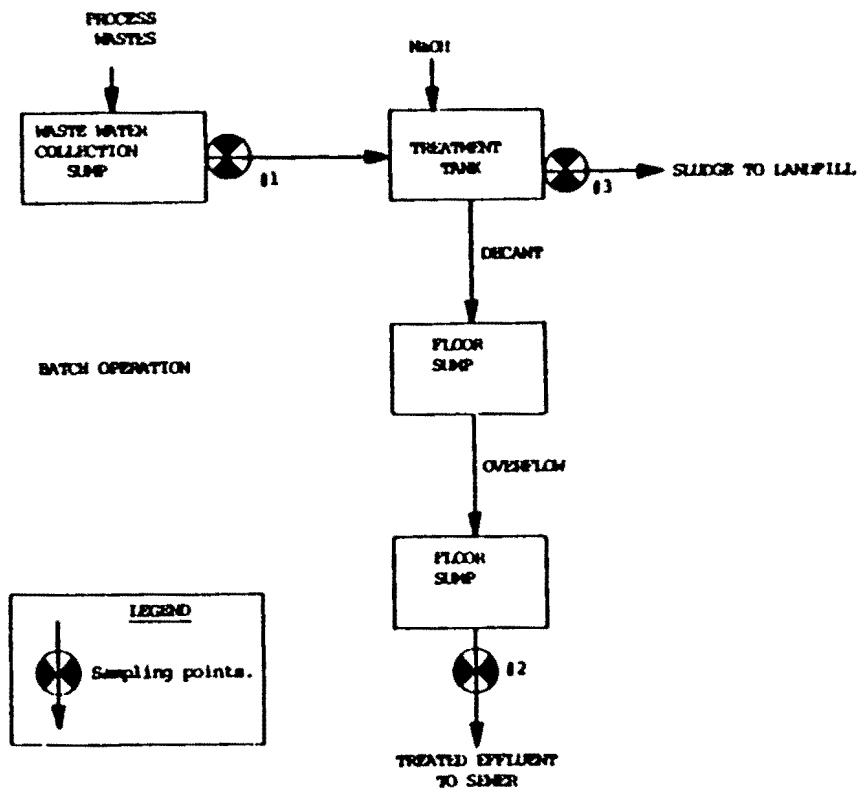

Figure 22-2. General waste water treatment process flow diagram showing sampling points at plant #369. (Nickel sulfate subcategory.)

TABLE 22-4. FLOW AND POLLUTANT CONCENTRATION DATA OF THE SAMPLED WASTE STREAMS FOR PLANTS PRODUCING NICKEL SULFATE

SUBCATEGORY NICKEL SULFATE

Stream No.	Sampled Stream Description	Flow (m3/kkg of $NiSO_4$)	TSS (kg/kkg of $NiSO_4$)	Ni (kg/kkg of $NiSO_4$)	Cu (kg/kkg of $NiSO_4$)
			Screening Data(1) Plant #369		
1	Raw untreated waste	0.42	0.093	0.073	0.030
2	Treated waste	0.42	0.045	0.00058	0.0076
			Verification Data Plant #120(2)		
1	Raw $NiSO_4$ waste	0.72	0.031	0.035	0.00016
2	All Nickel raw wastes*	0.72	0.05	0.0089	<0.0000036
3	Treated effluent*	0.72	0.0031	0.00014	0.000031
			Plant #572(3) (mg/l)		
1	Scrubber waste		3.2	1100	.04

(1) = One grab sample of each waste water stream representing a composited batch sample of that day's nickel sulfate production.
(2) = Average of three 24-hour composite samples of each waste water stream.
(3) = Flow data was unavailable. Only waste water quality is presented here.
* = The stream is a commingled waste water. The flow given is the amount contributed by the nickel sulfate plant.

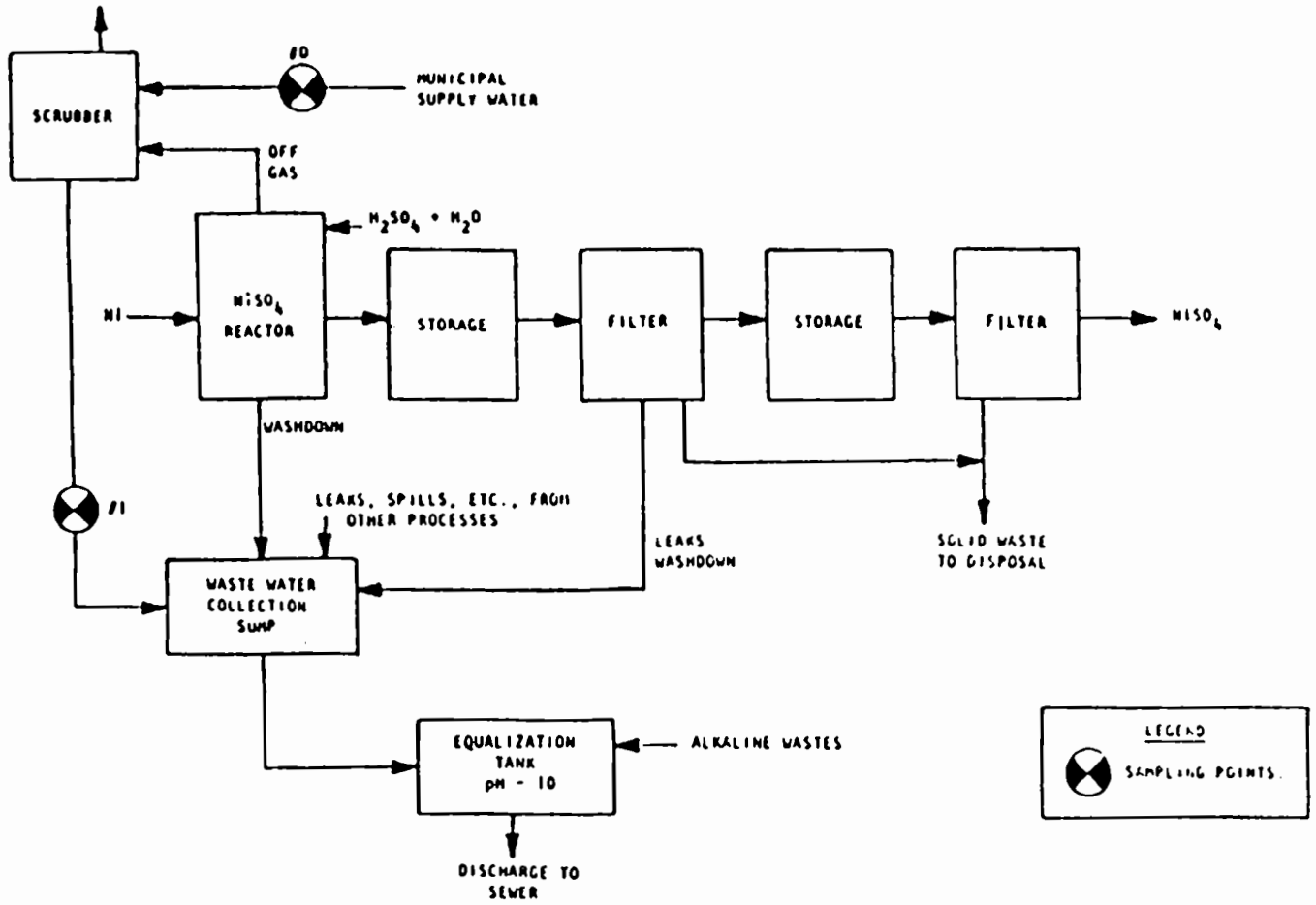

Figure 22-3. General process flow diagram at plant #572 showing the sampling points. (Nickel sulfate manufacture.)

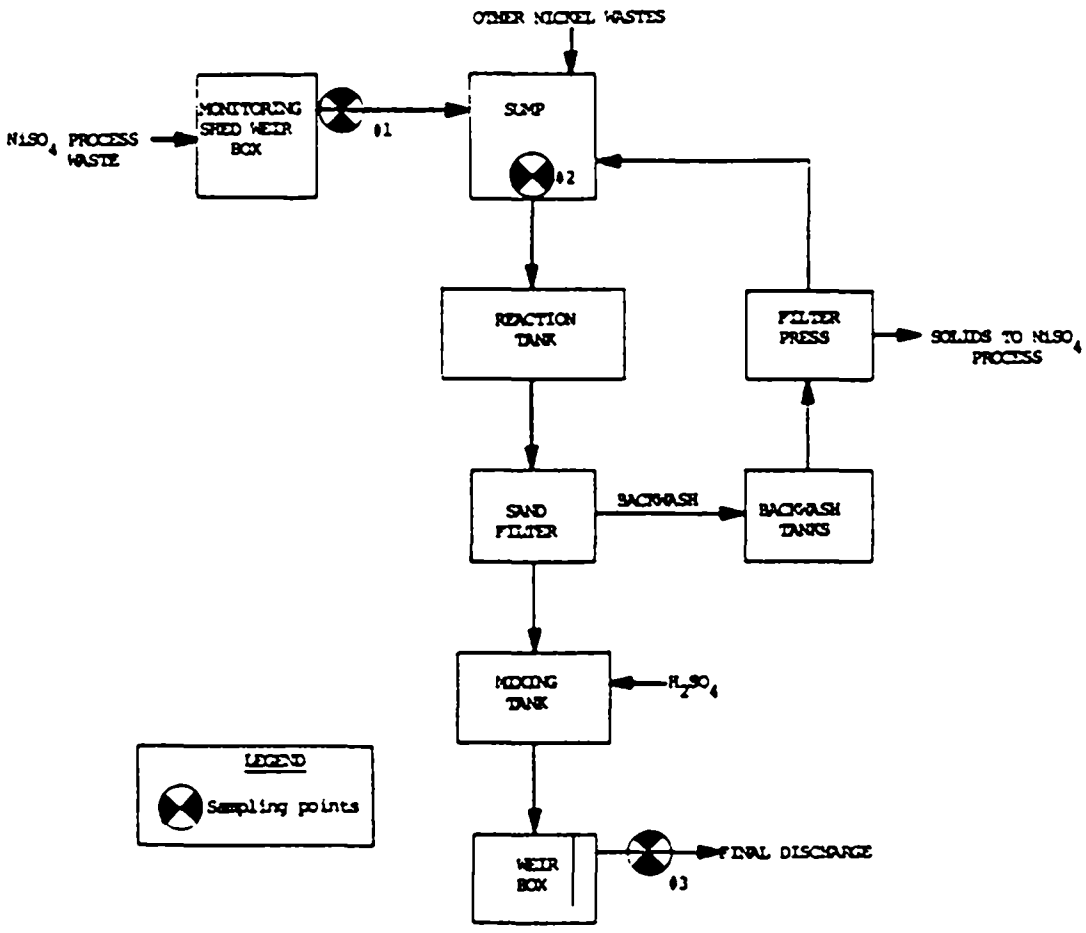

Figure 22-4. General waste water treatment process flow diagram at plant #120 showing the sampling points. (Nickel sulfate manufacture.)

22.3.3 Summary of Toxic Pollutant Data

Seven toxic pollutants were found at detectable concentrations in the raw waste sample from nickel sulfate at Plant #369. Six of these toxic metals were verified in the raw waste at two other nickel sulfate plants. In addition, two more toxic pollutants were observed at detectable concentrations in the raw waste during verification sampling. No toxic organics were found at detectable concentrations in the raw waste at Plant #369. Consequently, organic toxic pollutants were not sought in the verification phase. The results were:

Pollutant	Maximum Concentration Observed (µg/l) Screening Plant #369	Verification (2 Plants) Plants #572 and #120
Nickel	175,500	1,115,000
Copper	73,300	355
Chromium	1,300	20
Antimony	476	18
Lead	55	120
Mercury	1	10
Cadmium	9	160
Selenium	10	141
Zinc	430	382

Section 5.1.2 of this report describes the methodology of the screening and verification sampling program. In the nickel sulfate industry, a total of seven days of sampling were conducted at Plants #369, #572 and #120. Nine different sampling points were involved covering the raw waste source, the various raw waste streams, and the treated effluents at these plants. The evaluation of toxic metal content of these process-related waste streams was based on 195 analytical data points. The screening for toxic organic pollutants at Plant #369 generated an additional 342 analytical data points. The unit loadings were calculated from the reported nickel sulfate production rate, the waste stream flow rate measured or estimated at the time of sampling, and the measured pollutant concentration.

That is,

Unit loading (as kg of pollutant per kkg of nickel sulfate) $= \frac{(C)(Q)}{1000(P)}$

Where:

C is the concentration of the pollutant expressed in limits of mg/l (Note: kg/m3 = 1000 mg/l), and

Q is the waste stream flow rate expressed in units of m3/day, (m3, a cubic meter, is equal to 264.2 U.S. gallons) and P is the nickel sulfate production rate expressed in units of kkg/day (kkg is 1000 kg, a metric ton, which is equal to 2205 lbs).

The average values are based on data from those plants where the particular pollutant was found at detectable concentrations.

In Table 22-5, the toxic pollutant raw waste data are presented as the average daily concentrations and the unit loading found at the individual plants, with the exception of Plant #572 which presents only the concentrations. The overall averages are also shown and are calculated only for Plants #369 and #120, because they represent total composited waste water from the entire NiS04 process, while Plant #572 data are for one of several sources.

Based on the total annual production rate of this subcategory (see Table 22-1) and the average waste load generated per unit product, the estimated total pollutant raw waste loads generated each year for this subcategory are as follows:

Pollutant	Waste Load (kg/year)
Antimony	1.27
Arsenic	0.22
Cadmium	0.018
Chromium	1.72
Copper	95.2
Lead	0.19
Nickel	343
Selenium	< 0.17
Zinc	0.48

Mercury is not included in this list as it was found at a detectable concentration only in the one stream at Plant #572.

TABLE 22-5. TOXIC POLLUTANT RAW WASTE DATA

SUBCATEGORY: Nickel Sulfate

Average Daily Pollutant Concentrations and Loadings at Plants Sampled (1)

Pollutant	#369(S)	#120(V)	#572(2)	Overall(3)+ Average
	(mg/l) / (kkg of $NiSO_4 \cdot 7H_2O$)			
Antimony	0.48 0.00020	*	0.018	0.48 0.00020
Arsenic	*	0.049 0.000035	*	0.049 0.0000035
Cadmium	0.009 0.0000038	0.0027 0.0000019	0.16	0.0058 0.0000028
Chromium	1.3 0.00054	0.012 0.0000086	*	0.66 0.00027
Copper	73.3 0.030	0.22 0.00016	0.04	36.8 0.015
Lead	0.055 0.000022	0.052 0.000038	0.097	0.054 0.000030
Mercury	*	*	0.01	*
Nickel	176 0.073	49.2 0.035	1100	112 0.054
Selenium	< 0.010 < 0.0000041	0.069 0.00005	0.009	< 0.04 < 0.000027
Thallium	0.021 0.0000088	*	*	0.021 0.0000088
Zinc	0.27 0.00011	0.055 0.00004	0.38	0.16 0.000075

(S) - Screening data from one grab composite sample of the batch process combined raw waste streams.
(V) - Verification data from three 24-hour composite samples, averaged, from each raw waste sampling point.
* - Concentration below significant level.
(1) - The methodology of the sampling program is described in Section 5.1.2, and Section 22.3.3 presents the scope of sampling in the Nickel Sulfate industry.
(2) - Data for Plant #572 is presented in concentration basis only.
(3) - Average of Plants #369 and #120 only.
\+ - When averaging values indicated as "less than" (<), the absolute value was used and the resulting average was indicated as a "less than" value.

This stream is shared with another nickel compound process using different source materials. Cross contamination is suspected. Since mercury was found below detectable concentrations in all other nickel sulfate waste water, using Plant #572 would yield an erroneously high average. This would subsequently show an unrepresentative yearly waste load in the previous table. Based on the reliable data, mercury is not a pollutant of concern in the nickel sulfate industry.

22.4 POLLUTION ABATEMENT OPTIONS

22.4.1 Toxic Pollutants of Concern

The toxic pollutants present in a nickel sulfate process waste water depend upon the purity of the sources and the nature of the raw materials being used, which vary with time.

If impure raw materials are used, most of the heavy metal impurities will be removed in the purification process, handled and disposed of as solid sludge. These impurities build up in the mother liquor and subsequently appear in purges, leaks, and washdowns. The toxic metals such as nickel and copper, and to a lesser extent antimony, arsenic, cadmium, chromium, lead, selenium, and zinc found in the waste waters during sampling originate as trace impurities in the raw material source. Pure, raw materials do not exhibit the same phenomena in that this source is not present and therefore a plant will comply with the effluent limitations without operation of a treatment system.

Waste water quality for an air pollution control scrubber at Plant #572 is shown in Table 22-5. However, this source is not used to evaluate raw waste data, since it is only one of several sources and does not represent a total waste water stream. This scrubber also serves in another nickel compound manufacturing process alternately with nickel sulfate so it cannot be considered totally representative of the process of interest.

No toxic organic pollutants were found in the process-related waste streams at significant concentrations.

22.4.2 Process Modifications and Technology Transfer Options

Mechanical scrapers should be installed on filters at plants which use impure raw materials. This would eliminate the backwash and reduce the amount of waste water produced. Solids would need to be disposed of in a secure landfill. Installation of the scrapers would incur only a small capital cost.

22.4.3 Best Management Practices

The best technology for the treatment of waste water from processes using pure raw materials is recycle of all process waters. To implement this treatment, recycle piping and pumping are needed.

The best technology available where nickel sulfate is manufactured from impure plating solutions is caustic soda addition to precipitate nickel and other metallic hydroxides, followed by sand filtration to remove the suspended solids. This requires installing treatment tanks, filters, pH control equipment, and related piping and pumps.

22.4.4 Prevailing Control and Treatment Practices

Plant #369 sends filter leaks and wash water to a collection tank. When the batch manufacturing process is complete, the collected waste is treated with caustic soda to pH 12.5. The metals are precipitated as hydroxides, settled, and the sludge disposed of at an approved landfill. The supernatant is sampled and analyzed before discharge to a POTW.

Plant #120 waste waters are generated from leaks, washdowns, filter wash, and air scrubbers. These are combined with other nickel process wastes and treated with caustic soda to precipitate trace metals. The waste is then treated by filtration followed by pH adjustment prior to final discharge.

Plant #572 also combines wastes from the air scrubbers, leaks, and washdowns. These waste waters are sent to an equalization tank where they are mixed with alkaline wastes to raise the pH to 10. After settling, the waste wasters are discharged to a POTW.

Plant #069, which produces a reagent grade product, sends periodic purges and washdown water to a combined collection system with waste water from numerous other products. Treatment consists of neutralization and equalization of the wastes prior to discharge to a POTW.

Plant #313 also combines its waste waters from nickel sulfate production with wastes from various other metal processes and presently discharges the combined waste after a period of settling in a pond. A treatment system is being designed which uses lime precipitation at pH 10 followed by gravity separation. Centrifugation is to be used to thicken the sludge. The clarified waste water will then be neutralized to pH 6.5 - 7.5 and discharged.

Plant f603 has no discharge of waste waters from the nickel sulfate process.

22.4.5 Advanced Treatment Technologies

Alkaline precipitation will remove nickel and most other heavy metals from solution, allowing them to be settled and filtered in successive steps. Nickel and the common heavy metals (except chromium) can also be precipitated as metallic sulfides, for later separation by settling and filtration. Sulfide precipitation generally yields lower concentrations of the metals in the final effluent.

22.5 SELECTION OF APPROPRIATE TECHNOLOGY AND EQUIPMENT

22.5.1 Technologies for Different Treatment Levels

Level 1

Level 1 is BPT because alkaline precipitation with caustic soda is generally the treatment practice in place within this industry. This technology incorporates a final dual media filtration and is operated as a batch process to suit the production schedule. The flow diagram is shown in Figure 22-5.

Level 2

Alkaline precipitation is supplemented by the addition of ferrous sulfide, to precipitate dissolved nickel more effectively before the filtration step shown in Level 1. The flow diagram is shown in Figure 22-6.

22.5.2 Equipment for Different Treatment Levels

Equipment Functions

Wastes are received in a one-day holding tank or waste water collection sump which is drained each day to a reaction vessel. At the end of a normal work week, the contents of the reaction vessel are raised to about pH 10 with caustic soda, thoroughly mixed, and allowed to settle. The separated liquids and semisolids are then filtered and the final effluent is adjusted to a pH from 6 to 9 before discharge. In the low and midrange production models it is assumed that both the liquid and the semisolids in the reaction tank are filtered through a high-pressure filter press, and discharged after pH adjustment. In the highest production model, which generates 18 m3 per day of wastes, semisolids are filtered through a filter press and a separate dual media filter is provided for filtering the

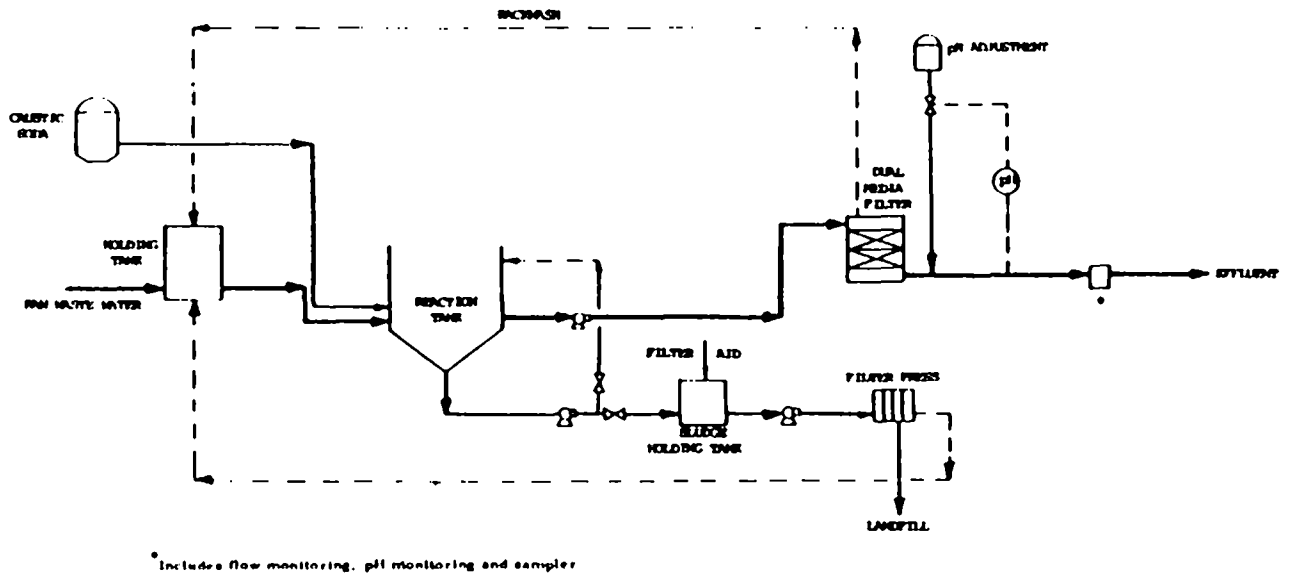

Figure 22-5. Level 1 waste water treatment for the nickel sulfate subcategory - batch process.

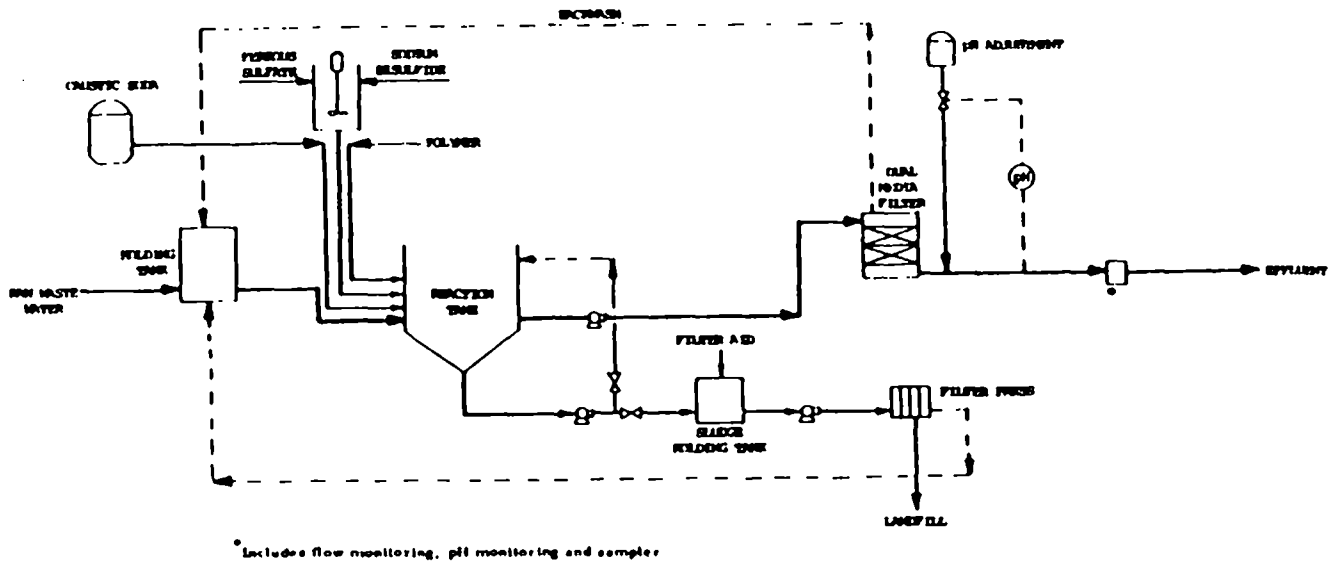

Figure 22-6. Level 2 waste water treatment for nickel sulfate subcategory - batch process.

decanted liquid. In Level 2, the metallic hydroxide sludge is drawn off to a sludge holding tank and the clarified supernatant in the reaction tank is treated with ferrous sulfide, precipitating metallic sulfides. The batch is then filtered through a filter press (for low and midrange plants) or through both a filter press and a dual-media filter in the larger operations.

Chemicals and Handling

Caustic soda in solution form is used for alkaline precipitation at both levels to form insoluble metallic hydroxides. The choice of caustic soda avoids precipitating calcium sulfate, as would occur with lime application. Caustic soda solution is handled in conventional equipment, or is drawn in batches from shipping containers when small volumes are needed. In Level 2, ferrous sulfide is prepared from ferrous sulfate and sodium bisulfide. No special problems arise when these materials are mixed in a well ventilated area and applied to the alkaline supernatant in the reaction tank.

Separation and Removal of Solids

In the low and midrange production models at both levels, essentially all solids are collected in a filter press, which is cleaned periodically. The dewatered sludge is hauled to a chemical landfill. In the larger model plant, backwash from cleaning the dual media filter returns to the influent holding tank, from which the suspended solids pass via the reaction tank to the sludge filter press.

Monitoring Requirements

Satisfactory separation of heavy metals can be assured by maintaining the proper reaction pH, which can be determined manually on each batch, using simple field equipment. For reporting purposes, occasional monitoring of nickel in the effluent should be done by atomic absorption methods. Monitoring for dissolved sulfide should not be necessary, because unreacted ferrous sulfide will oxidize to ferric sulfide and settle with the other metallic sulfides.

22.6 TREATMENT COST ESTIMATES

22.6.1 General Discussion

To prepare treatment cost estimates, a model plant concept was developed for both levels of technology as follows:

Waste Water Flow

Table 22-3 shows the waste water discharged to treatment for five plants. The unit waste water flow for the two single waste source plants ranged from 0.42 m3/kkg of NiSO4 to 0.72 m3/kkg of NiSO4. For the model plant cost estimates a production-weighted average of 0.68 m3/kkg for the two plants was used. This was accomplished by multiplying the unit flow of each plant by its daily production, adding the resultant values and dividing by the total production of the two plants, which results in these values being representative of the different production level plants.

Production

Nickel sulfate production ranges from 45 kkg/yr to 5,900 kkg/yr in the plants for which 308 Questionnaires were available. The average production for these six plants was 2,100 kkg/yr, the median was 1,600 kkg/yr. For waste water treatment cost estimates, three production levels were selected as model plants. These are 900 kkg/yr, 4,000 kkg/yr, and 7,000 kkg/yr. The mode of operation at all nickel sulfate plants is the batch process and, for the model plant, is assumed to operate for 250 days/year.

Solid Waste Generation

Solid wastes are generated from the filtration and settling of metals from the nickel sulfate solution. The solids can be recycled to the process for reuse when pure raw materials are used. If the solids are not recycled they are disposed of in an industrial landfill. The quantity of solids generated is 0.39 kg/kkg of nickel sulfate.

Treatment Chemicals

Caustic is required for neutralization to precipitate the metals as their hydroxides. Acid is needed for pH adjustment before final discharge. For the model plant, these practices were estimated to use 0.016 kg/kkg and 0.00010 kg/kkg, respectively.

22.6.2 Model Plant Control Costs

The cost estimates for three models having different production levels are presented in Tables 22-6, 22-7, and 22-8. Annual costs as a function of production is shown graphically in Figure 22-7, while treatment cost per metric ton of product is shown in Figure 22-8.

TABLE 22-6. MODEL PLANT TREATMENT COSTS

Subcategory NICKEL SULFATE

Production	900 metric tons per year	(992 tons per year)
	3.6 metric tons per day	(4 tons per day)
Waste water flow	2.45 cubic meters per day.	

	LEVEL OF TREATMENT*	
	FIRST	SECOND
A. INVESTMENT COST		
Construction	$ 6,000	$ 100
Equipment in place, including piping, fittings, electrical work and controls.....	29,500	900
Monitoring equipment in place	9,000	
Engineering design and inspection	8,900	200
Incidentals, overhead, fees, contingencies.....	8,900	200
Land.....	1,800	
TOTAL INVESTMENT COST	$64,100	$1,400
B. OPERATION AND MAINTENANCE COST		
Labor and supervision.....	$ 8,000	
Energy	30	
Chemicals	200	30
Maintenance.....	6,230	140
Taxes and insurance	1,923	42
Residual waste disposal.....	100	
Monitoring, analysis and reporting.....	2,500	1,250
TOTAL OPERATION AND MAINTENANCE COST	$18,983	$1,462
C. AMORTIZATION OF INVESTMENT COST	$10,136	$ 227
TOTAL ANNUAL COST	$29,119	$1,689

* First level represents the base cost of treatment system. Other levels represent the incremental cost above base cost.

TABLE 22-7. MODEL PLANT TREATMENT COSTS

Subcategory NICKEL SULFATE

Production	4,000 metric tons per year	(4,400 tons per year)
	16 metric tons per day	(17.6 tons per day)
Waste water flow	10.9 cubic meters per day.	

	LEVEL OF TREATMENT*	
	FIRST	SECOND
A. INVESTMENT COST		
Construction	$8,350	$100
Equipment in place, including piping, fittings, electrical work and controls.....	51,000	900
Monitoring equipment in place.....	9,000	
Engineering design and inspection.....	13,670	200
Incidentals, overhead, fees, contingencies...	13,670	200
Land.....	1,800	
TOTAL INVESTMENT COST	$97,490	$1,400
B. OPERATION AND MAINTENANCE COST		
Labor and supervision.	$8,000	
Energy.....	40	
Chemicals.....	900	75
Maintenance.....	9,569	140
Taxes and insurance...	2,924	42
Residual waste disposal.....	100	
Monitoring, analysis and reporting.....	2,500	1,250
TOTAL OPERATION AND MAINTENANCE COST	$24,033	$1,507
C. AMORTIZATION OF INVESTMENT COST	$15,568	$227
TOTAL ANNUAL COST	$39,601	$1,734

*First level represents the base cost of treatment system.
Other levels represent the incremental cost above base cost.

TABLE 22-8. MODEL PLANT TREATMENT COSTS

Subcategory NICKEL SULFATE

Production 7,000 metric tons per year (7,700 tons per year)
28 metric tons per day (30.8 tons per day)
Waste water flow 19.0 cubic meters per day.

	LEVEL OF TREATMENT*	
	FIRST	SECOND
A. INVESTMENT COST		
Construction	$12,000	$200
Equipment in place, including piping, fittings, electrical work and controls.....	94,500	1,000
Monitoring equipment in place.....	9,000	
Engineering design and inspection.....	23,100	240
Incidentals, overhead, fees, contingencies...	23,100	240
Land.....	3,000	
TOTAL INVESTMENT COST	$164,700	$1,680
B. OPERATION AND MAINTENANCE COST		
Labor and supervision.	$8,000	
Energy.....	50	
Chemicals.....	1,600	135
Maintenance.....	16,170	168
Taxes and insurance...	4,941	50
Residual waste disposal.....	200	
Monitoring, analysis and reporting.....	2,500	1,250
TOTAL OPERATION AND MAINTENANCE COST	$33,461	$1,603
C. AMORTIZATION OF INVESTMENT COST	$26,308	$273
TOTAL ANNUAL COST	$59,769	$1,876

*First level represents the base cost of treatment system.
Other levels represent the incremental cost above base cost.

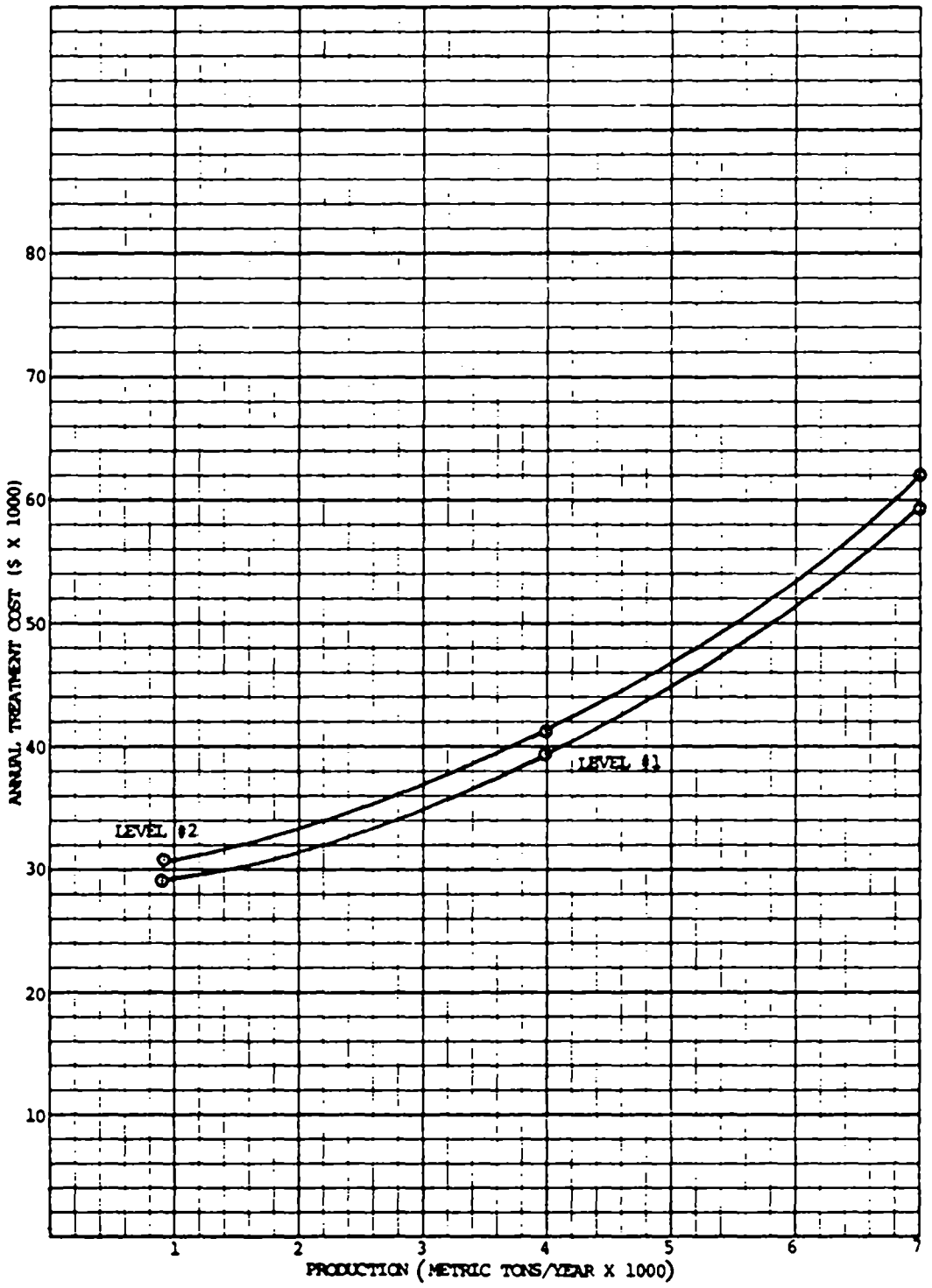

Figure 22-7. Relationship of annual treatment cost to production for the nickel sulfate subcategory.

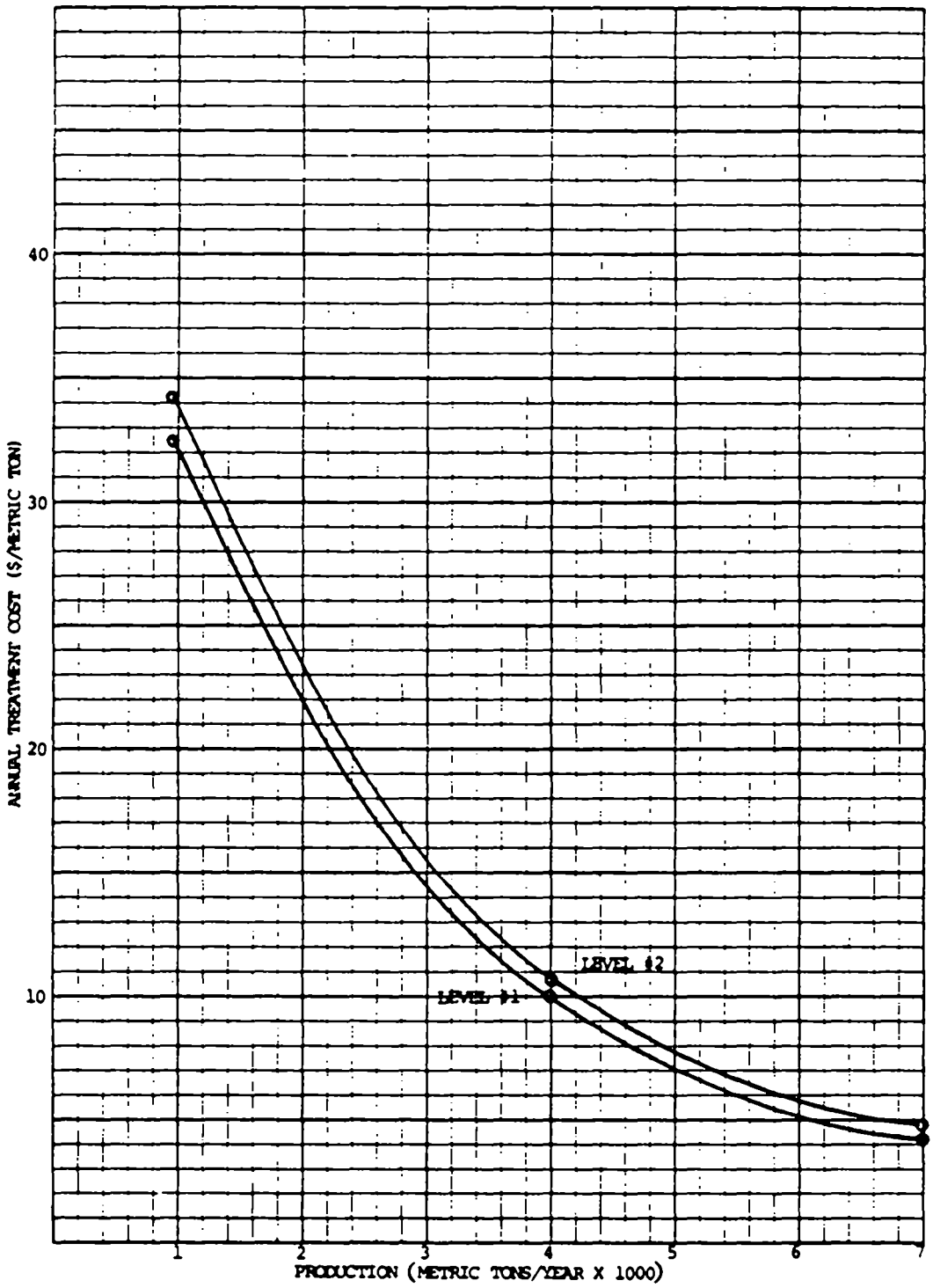

Figure 22-8. Relationship of annual unit treatment cost to production for the nickel sulfate subcategory.

Table 22-9 gives a summary of the unit cost distribution between amortization and operation and maintenance cost components at various production rates and levels of treatment.

Cost estimates developed for the first level of treatment indicate that at low production levels, labor cost has a significant impact on the total annual costs. At a medium production level, amortization, operation, and maintenance costs are the important factors in the annual costs. At a high production level, amortization cost is the significant factor in the annual costs. At the second level of treatment, there is no significant change in the annual cost, with production.

22.7 BASIS FOR REGULATIONS

22.7.1 Evaluation of BPT Treatment Practices

Nickel sulfate can be manufactured using pure nickel as the raw material or an impure nickel raw material. Waste loads emanating from the two sources differ in that total recycle of process wastes can be accomplished at plants using a pure nickel source, while at plants using an impure raw material, waste streams need to be purged periodically to avoid build-up of contaminants in the process.

Pollutant Removal with BPT Treatment

BPT technology for nickel sulfate plants utilizing impure raw materials is equivalent to treatment Level 1. Table 22-10 presents the toxic pollutant treated effluent data for both Plants #369 and #120 in a similar manner as Table 22-5 presented the raw waste data. In evaluating BPT treatment the data from Plant #120 was used, rather than Plant #369, or overall average data. This is because the treatment at Plant #120 represents a typical BPT system, while Plant #369 has no filtration before discharge to a POTW. Long-term effluent monitoring data for Plant #120 can be found in Tables A-15a through A-15d. The data is for nickel only and is presented in concentration and daily loading units for both daily and monthly measurements.

In comparing raw waste and effluent data (Tables 22-4, 22-5, and 22-10), BPT treatment gave a suspended solids removal of over 93 percent, while the toxic metals nickel and copper had over 98 percent removal. All of the toxic pollutant concentrations were below the lower limit of treatability-based achievable concentration (Table 8-11) utilizing BPT technology with the exception of nickel, which is in the range of

TABLE 22-9. MODEL PLANT TREATMENT COSTS

Subcategory NICKEL SULFATE

COST ITEM	PRODUCTION (kkg/yr)	FLOW (m3/day)	Annual Treatment Costs ($/kkg) LEVEL OF TREATMENT FIRST	SECOND	THIRD	FOURTH
Annual Operation and Maintenance	900	4.3	21.09	1.62	Not Applicable	
	4,000	19.2	6.01	0.38		
	7,000	33.6	4.78	0.23		
Annual Amortization	900	4.3	11.26	0.25		
	4,000	19.2	3.89	0.06		
	7,000	33.6	3.76	0.04		
Total Cost	900	4.3	32.35	1.88		
	4,000	19.2	9.90	0.43		
	7,000	33.6	8.54	0.27		

TABLE 22-10. TOXIC POLLUTANT TREATED EFFLUENT DATA

SUBCATEGORY: Nickel Sulfate

Average Daily Pollutant Concentrations and Loadings at Plants Sampled[1]

Pollutant	(mg/l) / (kkg of $NiSO_4 \cdot 7H_2O$) #369 (S)	#120 (V)	Overall[2] Average
Antimony	0.2 0.000083	*	0.2 0.000083
Arsenic	0.26 0.00011	<0.010 <0.0000072	< 0.13 < 0.000059
Cadmium	< 0.001 < 0.00000042	0.00013 0.000000094	< 0.00056 < 0.00000026
Chromium	0.45 0.00019	0.057 0.000041	0.25 0.00012
Copper	18.0 0.0075	<0.043 <0.000031	9.02 < 0.0038
Lead	0.001 0.00000042	0.003 0.0000022	0.002 0.0000013
Nickel	1.4 0.00058	0.20 0.00014	0.8 0.00036
Selenium	0.012 0.000005	<0.008 <0.0000058	0.01 0.0000054
Thallium	0.029 0.000012	0.00033 0.00000024	0.015 0.0000061
Zinc	0.17 0.000071	0.058 0.000042	0.11 0.000056

(S) - Screening data from one grab composite sample of treated effluent.
(V) - Verification data from three 24-hour composite samples, averaged.
(1) - The effluent data presented here corresponds to the raw waste data shown in Table 12-5 excluding Plant #572. The methodology of the sampling program is described in Section 5.1.2, and the scope of sampling in the Nickel Sulfate industry is described in Section 22.3.3.
(2) - When averaging values indicated as "less than" (<), the absolute value was used and the resulting average was indicated as a "less than" value.
* - Concentration below significant level.

achievable concentrations. Many of the toxic metals from the effluent of Plant #369 were below BPT based achievable levels, with only hydroxide precipitation and settling.

22.7.2 Basis for Proposed BPT Effluent Limitations

BPT regulations for the nickel subcategory are presently in effect, 40 CFR 415.472 (See Table 22-2). The technology basis for the existing BPT is alkaline precipitation plus dual media filtration and final pH adjustment before discharge. Most direct dischargers in this subcategory have installed BPT technology or equivalent.

In the existing BPT regulations, EPA has different limitations for pure and impure raw materials processes. EPA is not proposing different limits for these processes in the proposed BPT, BAT, NSPS, PSES, and PSNS regulations. This is because both processes are adequately covered by the one regulation since the pure raw materials process will comply without end of the pipe treatment. Only nickel and TSS are regulated in the proposed BPT because these are the only two parameters limited in the existing BPT regulation.

22.7.3 Basis for Proposed BCT Effluent Limitations

BCT was set equal to BAT because the addition of more treatment technology to remove conventional pollutants failed to pass the cost test.

22.7.4 Basis for Proposed BAT Effluent Limitations

Technology Basis

For BAT, the Agency is proposing limitations based on BPT technology which is alkaline precipitation followed by dual media filtration. The Agency considered treatment Level 2 (sulfide precipitation), but rejected it because the treatment removed only small additional amounts of toxic metals in this subcategory.

Flow Basis

The model plant BAT treatment system is based on an inflow rate of 0.68 m3/kkg for effluent limitation purposes. The rationale for the flow is the same as that used for the model plant basis for cost estimating as described in Section 22.6.1.

Selection Basis for Pollutants to be Regulated

The selection of pollutants for which numerical effluent limitations are proposed was based on an evaluation of raw waste

data from the screening and verification sampling program. The two major factors considered were: 1) individual sampling raw waste concentrations, and 2) the total subcategory raw waste loadings.

Raw waste pollutant concentrations - A tabular summary of maximum raw waste concentrations found in sampling is presented in Section 22.3.3. Data from the plant sampled in screening were used to determine the need for verification sampling. The maximum concentration found during both screening and verification are shown for comparison. For each pollutant, the maximum concentration observed gave a preliminary indication of its potential significance in the subcategory. On this basis, the preliminary selection of nickel, copper, chromium, and to a lesser extent, lead, antimony, and zinc are included as candidates for regulation. These pollutants were observed at least once during screening at concentrations considered treatable in this industry using one of the available treatment technology options. The other toxic metals (mercury, cadmium, and selenium) were found to have maximum concentrations that were lower than the minimum levels achievable by treatment.

Total subcategory raw waste pollutant loadings - Pollutant raw waste loading data were used to evaluate the overall magnitude of the pollution potential. Data from the plants sampled are summarized in Table 22-5. This information, coupled with the estimated total nickel sulfate production rate of 6,350 kkg/year found in Table 22-1, yielded the approximate total annual pollutant loading rates for the subcategory shown in Section 22.3.3. This method of ranking the pollution potential of the observed toxic metals confirms the maximum concentration-based ranking and indicated that nickel, copper, chromium, antimony, zinc, and lead were the six dominant toxic metals in terms of both total mass loading and treatable raw waste concentrations.

Basis of Pollutant Limitations

Conventional parameters - For pH the treated effluent is to be controlled within the range of 6.0 to 9.0. This limitation is based on the data presented in Appendix B of this report and the JRB Study (52).

Toxic pollutants - The effluent limitations proposed for the selected toxic pollutant control parameters are derived primarily from literature based treatability estimates (Section 8.1). This is because plant performance data from sampling at Plant #120 (Table 22-10) show effluent concentrations below the lower limit of treatability estimates for all of the toxic metals except nickel. For nickel, the basis of the effluent limitation is the effluent from Plant #120 shown in Table 22-10.

The average values for each pollutant found in sampling are interpreted as being approximately equal to a maximum 30-day average unless there is some reason to believe that some abnormal conditions existed either in the process operation or in the treatment system at the time of sampling. Abnormal conditions would dictate that high values should be either excluded, or regarded as daily maxima rather than monthly averages. For this subcategory, verification data at Plant #120 are believed to represent normal influent and effluent values.

Effluent quality achievable through implementation of BPT technology is presented in Table 22-11. The concentration basis for the proposed BAT limitations is derived from the lowest applicable treatability level from Table 8-11 for all pollutants except nickel. The concentration basis for nickel is based on achievement at Plant #120. This approach results in the setting of achievable limitations for all of the pollutants concerned and provides for the possibility of wider variations in the influent quality. Such variations may be associated with different nickel or nickel solution impurity levels or other process variables not fully taken into account by the limited data obtained.

The basis for the proposed BAT limitations on each of the selected metals is given below.

A. Nickel: From Table 22-10, Plant #120 shows an effluent quality of 0.20 mg/l, which is within the treatability range of 0.1-0.5 mg/l. This concentration of 0.20 mg/l is used as the concentration basis to calculate the proposed maximum 30-day average effluent limitation of 0.00014 kg/kkg. This was calculated as follows:

$$(0.20\ \text{mg/l})(0.68\ \text{m3/kkg})\left(\frac{\text{kg/m3}}{1000\ \text{mg/l}}\right) = 0.00014\ \text{kg/kkg}$$

The variability factor ratio of daily maximum limits to limits for average of daily values for 30 consecutive days (VFR) was set at 3.0 based on variability analysis of long-term data on nickel from Plant #120. The statistical analysis of the data indicates a ratio closer to 4.0 but this is excessive variability for the treatment technology used. The higher ratio is the result of wide variations in the daily measurements when operational problems were experienced at the plant. The data is presented in Tables A-15a through A-15d in Appendix A.

Therefore, the daily maximum limitation for nickel is,

$$(3.0)(0.00014\ \text{kg/kkg}) = 0.00042\ \text{kg/kkg}$$

TABLE 22-11. PROPOSED EFFLUENT LIMITATIONS
Nickel Sulfate
Best Available Technoloty
Waste Water Flow: 0.68 m3/kkg of $NiSO_4$

Pollutant	Subcategory Performance (mg/l)	VFR[1]	Concentration Basis (mg/l) Max 30-day Avg	Concentration Basis (mg/l) 24-hr Max	Effluent Limit (kg/kkg of $NiSO_4$) Max 30-day Avg	Effluent Limit (kg/kkg of $NiSO_4$) 24-hr Max
Antimony[5]	0.4[2]	3.0	0.4	1.2	0.00027	0.00081
Cadmium	0.05[2]	3.0	0.05	0.15	--[4]	--[4]
Chromium[5]	0.05[2]	3.0	0.05	0.15	0.000034	0.00010
Copper[5]	0.4[2]	3.0	0.4	1.2	0.00027	0.00081
Lead[5]	0.05[2]	3.0	0.05	0.15	0.000034	0.00010
Nickel[5]	0.2[3]	3.0	0.2	0.6	0.00014	0.00042
Selenium	0.1[2]	3.0	0.1	0.3	--[4]	--[4]
Zinc[5]	0.4[2]	3.0	0.4	1.2	0.00027	0.00081

(1) VFR: ratio of the 24-hour variability factor to the 30-day variability factor.

(2) The lower limit of the literature treatability estimate (Table 8-11) is used as the basis for the 30-day average limitation when the observed average of the sampling data is below this level.

(3) Average effluent concentration from screening and verification sampling data.

(4) No effluent limitation proposed.

(5) Also applicable to NSPS.

These values are considerably lower than the BPT limits presented in Table 22-2. This is because the information on treatment system performance based on information collected to support this regulation showed better performance than that expected when the existing BPT regulation was developed.

B. Copper: Because the effluent concentration of copper was observed at Plant #120 below the treatability estimates, the lower limit of 0.40 mg/l was chosen as the concentration basis for the proposed maximum 30-day average effluent limitation for copper. A VFR of 3.0 was also used based on the similarity of the chemistry of nickel and copper in the BPT treatment system.

Thus, the proposed maximum 30-day average effluent limitation is,

$$(0.40\ mg/l)\ (0.68\ m3/kkg)\left(\frac{kg/m3}{1000\ mg/l}\right) = 0.00027\ kg/kkg$$

and the daily maximum limitation is,

$$(3.0)(0.00027\ kg/kkg) = 0.00081\ kg/kkg$$

C. Chromium: The concentration basis for the maximum 30-day average effluent limitation on chromium was set at 0.050 mg/l in accordance with the literature treatability data (Table 8-11). A VFR of 3.0 was used following the same rationale described for copper. Thus, for chromium, the proposed maximum 30-day average limitation is,

$$(0.050\ mg/l)\ (0.68\ m3/kkg)\left(\frac{kg/m3}{1000\ mg/l}\right) = 0.000034\ kg/kkg$$

and the daily maximum is,

$$(3.0)(0.000034\ kg/kkg) = 0.00010\ kg/kkg$$

D. Antimony: The concentration basis for the maximum 30-day average effluent limitation on antimony was set at 0.40 mg/l in accordance with the literature treatability data (Table 8-11). A VFR of 3.0 was used following the same rationale described for copper. Thus, for antimony, the proposed maximum 30-day average limitation is,

$$(0.40\ mg/l)(0.68\ m3/kkg)\left(\frac{kg/m3}{1000\ mg/l}\right) = 0.00027\ kg/kkg$$

and the corresponding daily maximum is,

$$(3.0)(0.00027\ kg/kkg) = 0.00081\ kg/kkg$$

E. Lead: A concentration of 0.050 mg/l was set as the concentration basis for the proposed maximum 30-day average limitation on lead in accordance with the literature treatability data (Table 8-11). A VFR of 3.0 was used following the same rationale described for copper. Thus, for lead, the proposed maximum 30-day average effluent limitation is,

$$(0.050\ mg/l)(0.68\ m3/kkg)\left(\frac{kg/m3}{1000\ mg/l}\right) = 0.000034\ kg/kkg$$

and the daily maximum is,

$$(3.0)(0.000034\ kg/kkg) = 0.00010\ kg/kkg$$

F. Zinc: The concentration basis for the proposed maximum 30-day average effluent limitation on zinc was set at 0.40 mg/l in accordance with the literature treatability data (Table 8-11). A VFR of 3.0 was used following the same rationale described for copper. Thus, for zinc, the proposed maximum 30-day average effluent limitation is,

$$(0.40\ mg/l)(0.68\ m3/kkg)\left(\frac{kg/m3}{1000\ mg/l}\right) = 0.00027\ kg/kkg$$

and the daily maximum is,

$$(3.0)(0.00027\ kg/kkg) = 0.00081\ kg/kkg$$

G. Other Metals: The concentration basis for cadmium, and selenium are also presented in Table 22-11. These are also based on literature treatability data. These are intended to serve as guidance in cases where these pollutants are found to be of serious concern.

Application of Advanced Level Treatment

Only one advanced treatment alternative has been developed for the nickel sulfate subcategory. Addition of sulfide before filtration for further removal of nickel was considered. Table 22-12 presents estimated achievable effluent quality through implementation of this advanced technology. The concentrations are based on the literature treatability data and the VFR is based on data from this particular treatment. However, BPCTCA Level 1 technology affords adequate control and the application of a higher level of treatment for BAT was not selected because the pollutant reduction was not sufficient to offset the additional cost.

TABLE 22-12. PROPOSED EFFLUENT LIMITATIONS
Nickel Sulfate
Treatment Level 2
Waste Water Flow: 0.68 m^3/kkg of $NiSO_4$

Pollutant	Treatability (mg/l)	VFR[1]	Achievable Concentration (mg/l)	
			Max 30-day Avg	24-hr Max
Antimony	0.4	3.0	0.4	1.2
Arsenic	0.05	3.0	0.05	0.15
Cadmium	0.01	3.0	0.01	0.03
Chromium	0.05	3.0	0.05	0.15
Copper	0.05	3.0	0.05	0.15
Lead	0.05	3.0	0.05	0.15
Nickel	0.05	3.0	0.05	0.15
Selenium	0.1	3.0	0.1	0.3
Thallium	0.1	3.0	0.1	0.3
Zinc	0.02	3.0	0.02	0.06

(1) VFR: Ratio of the 24-hour variability factor to the 30-day variability factor.

22.7.5 New Source Performance Standards

After examination of the effectiveness of the two treatment technologies applicable to nickel sulfate wastes, it has been determined and the agency is proposing that BAT technology be the basis for NSPS. The effluent limits for toxic metals are the same as for BAT shown in Table 22-11, and TSS is being proposed at the same effluent level as in the existing BPT regulation presented in Table 22-2.

22.7.6 Basis for Proposed Pretreatment Standards

Two industrial grade nickel sulfate plants are known to presently discharge to POTWs. Pretreatment at one plant is simple settling while at the other, it is hydroxide precipitation followed by settling.

Considering the small waste water flows generated in the manufacture of nickel sulfate, the application of BPT technology is appropriate for pretreatment.

There is an existing PSES regulation, 40 CFR 415.474. The Agency is proposing to amend that section of these regulations based on new treatment system performance data and the PSES limitations are the same as those presented for BAT in Table 22-11. EPA is also proposing PSNS limitations equal to the BAT limits presented in Table 22-11. The pollutants limited by the proposed PSES and PSNS regulations are nickel, antimony, chromium, copper, lead, and zinc.

Intentionally Blank Page

SECTION 23

SILVER NITRATE INDUSTRY

23.1 SUMMARY OF DETERMINATIONS

Action on this subcategory has been deferred, and a new subcategory including all silver compounds will be reviewed under Phase II BAT review, because the logical sequence of guideline promulgation was to start the guideline process with nonferrous metals to be followed later by a regulation on silver compounds.

23.2 ASSESSMENT OF THE WATER POLLUTION POTENTIAL

23.2.1 Production Processes and Effluents

Most of the silver nitrate produced is for captive use in the photographic industry. It is also used in the manufacture of silver salts, mirrors, for silver plating, coloring porcelain and as a chemical reagent.

The industry profile data is given in Table 23-1.

Toxic pollutants found at significant levels during sampling at one plant were:

Pollutant	Concentration (µg/l) Screening	Verification
Silver	164	65
Cyanide	580	470

Silver was not found at a significant concentration during verification sampling of the same plant. However, a significant level of cyanide was found again. The source of cyanide was found to be from a soaking solution which is used to remove silver nitrate stains from workers' clothes. The solution is sent to the silver recovery treatment system. When plant personnel discontinued this practice cyanides disappeared from the effluent.

Preceding page blank

TABLE 23-1 - SUBCATEGORY PROFILE DATA SUMMARY

SUBCATEGORY	SILVER NITRATE
Total subcategory capacity rate	
Total subcategory production rate	35,000 kkg/year
Number of plants in this subcategory	7
308 Data on file for	2
With total capacity of	6,507 kkg/year
With total production of	3,256 kkg/year
Representing capacity	NA
Representing production	9 percent
Plant production range:	
Minimum	50 kkg/year
Maximum	3,206 kkg/year
Average production	NA
Median production	NA
Average capacity utilization	NA
Plant age range:	
Minimum	20 years
Maximum	64 years
Waste water flow range:	
Minimum	<1 cubic meters/day
Maximum	38 cubic meters/day
Volume per unit product:	
Minimum	1 cubic meter/kkg
Maximum	4 cubic meters/kkg

Sources of data are Stanford Research Institute, Directory of Chemical Producers, U.S.A., 1977, U.S. Department of Commerce, Current Industrial Reports, December 1977; Energy and Environmental Analysis, Inc.; Draft Report, "Preliminary Economic Assessment of Effluent Limitations in the Inorganic Chemical Industry," June 1978 and "Economic Analysis of Proposed Revised Effluent Guidelines and Standards for the Inorganic Chemicals Industry," March, 1980.

NA = Not Available

23.3 STATUS OF REGULATIONS

Subpart BA has been reserved for this subcategory.

Intentionally Blank Page

SECTION 24

SODIUM BISULFITE INDUSTRY

24.1 INDUSTRY PROFILE

24.1.1 General Description

Sodium Bisulfite is manufactured both in liquid and powdered form. Captive use is very small. Sodium bisulfite is used in the manufacture of photographic chemicals, organic chemicals, textile and in food processing. It is also used in the tanning industry and in the sulfite process for the manufacture of paper products.

The industry profile data are given in Table 24-1, while status of regulations are summarized in Table 24-2.

24.1.2 General Process Description and Raw Materials

Sodium bisulfite is produced by reacting sodium carbonate (soda ash) with sulfur dioxide and water. The reaction is:

$$Na_2CO_3 + 2SO_2 + H_2O = 2NaHSO_3 + CO_2 \qquad (1)$$

This reaction produces a slurry of sodium bisulfite crystals which can be sold, but which is usually processed to form anhydrous sodium metabisulfite. This requires thickening, centrifuging, drying, and packaging operations.

24.2 WATER USE AND WASTE SOURCE CHARACTERISTICS

24.2.1 Water Use

Direct process contact water is used to slurry the sodium carbonate for the reaction. Noncontact cooling water is another water use at one plant. Water is also used for pump seals, maintenance and washdowns. Table 24-3 gives a summary of water usage at the plants for which 308 Questionnaires were available.

TABLE 24-1. SUBCATEGORY PROFILE DATA SUMMARY

SUBCATEGORY	Sodium Bisulfite
Total subcategory capacity rate	
Total subcategory production rate	98,000 kkg/year (1)
Number of plants in this subcategory	7
308 Date on file for	2
With total capacity of	46,000 kkg/year
With total production of	28,300 kkg/year
Representing production	
Plant production range:	
Minimum	4,700 kkg/year
Maximum	23,600 kkg/year
Average production	17,800 kkg/year
Median production	16,900 kkg/year
Average capacity utilization	62 percent
Plant age range:	
Minimum	4 years
Maximum	19 years
Waste water flow range:	
Minimum	3 cubic meters/day
Maximum	100 cubic meters/day
Volume per unit product:	
Minimum	< 1 cubic meters/kkg
Maximum	< 1 cubic meters/kkg

Sources of data are Stanford Research Institute, Directory of Chemical Producers, U.S.A., 1977, U.S. Department of Commerce, Current Industrial Reports, December 1977; Energy and Environmental Analysis, Inc.; Draft Report, "Preliminary Economic Assessment of Effluent Limitations in the Inorganic Chemical Industry."

(1) "Energy and Environmental Analysis, Inc.; Economic Analysis of Proposed Revised Effluent Guidelines And Standards for the Inorganic Chemicals Industry," March 1980.

TABLE 24-2. STATUS OF REGULATIONS - EFFLUENT LIMITATION GUIDELINES

SUBCATEGORY Sodium Bisulfite

SUBPART BB (40 CFR 415.540, 5/22/75)

		STANDARDS					
		BPCTCA		BATEA		NSPS	
Product Process	Parameters	Max.[1] kg/kkg (mg/l)	Avg.[2] kg/kkg (mg/l)	Max. kg/kkg (mg/l)	Avg. kg/kkg (mg/l)	Max. kg/kkg (mg/l)	Avg. kg/kkg (mg/l)
Sodium Bisulfite	Reserved	Reserved		Reserved		Reserved	

[1]Max = Maximum of any one day.

[2]Avg = Average of daily values for thirty consecutive days shall not exceed.

TABLE 24-3. WATER USAGE IN THE SODIUM BISULFITE SUBCATEGORY

Plant	Direct Contact Process (m^3/kkg)	Noncontact Cooling (m^3/kkg)	Maintenance Washdowns, etc. (m^3/kkg)
# 282	0.14	3.85	1.00
# 586	NA	NA	NA
# 987	1.15	0	0.38

NA = Not Available

24.2.2 Water Sources

Noncontact cooling water for the centrifuge is a source of waste at one plant. However, direct process contact water is the main source of waste water which must be treated, together with miscellaneous wastes such as water used for maintenance purposes, washdowns, and spill cleanup.

Table 24-4 summarizes the waste water unit flows from the major waste sources for Plants #987 and #282. Plant #987 has two facilities that produce sodium bisulfite which are designated A and B.

There is little solid waste generation in the production of sodium bisulfite and process waste treatment. There are minor quantities which are precipitated as metal hydroxides resulting in insignificant amounts of filter cake requiring disposal. Generation of solid waste is therefore assumed negligible.

24.3 DESCRIPTION OF PLANTS VISITED AND SAMPLED

24.3.1 Screening

Plant #282 was visited in the screening phase of the program. The bisulfite waste is treated on a batch basis every two or three days. Sodium hypochlorite is added to the waste to oxidize the sulfite waste, is mixed with wastes from an organic chemical plant and neutralized. The combined wastes are then discharged to a sewer. Table 24-5 shows the flow data and pollutant discharges, while Figure 24-1 gives the process flow diagram and shows the sampling points used in screening.

24.3.2 Verification

In verification, two plants were visited, Plants #586 and #987. At Plant #586 the sodium bisulfite wastes are combined with many other process wastes and they are treated together. Figure 24-2 shows the flowsheet and the points sampled. Table 24-6 gives the pollutant emissions and flow data for the waste streams. The filter wash is the main process at Plant #987. This waste is neutralized with caustic soda to pH 9 - 10 to convert the bisulfite waste to sulfite. The sulfite is then oxidized with air to sulfate. The treated waste, including solids, is discharged to a river. Table 24-7 shows the pollutant emissions and flow data for the waste streams sampled. Figure 24-3 shows the process flow diagram and sampling points at Plant #987.

TABLE 24-4. WASTE WATER FLOW AT PLANTS #987 AND #282 FOR SODIUM BISULFITE SUBCATEGORY

SUBCATEGORY	SODIUM BISULFITE		
Source	Flow Rate Per Unit of Production (m^3/kkg)(1)		
	#987A	#987B	#282
Direct Process Contact(3)	0.018	0.018	0.14
Indirect Process Contact	1.50	1.17	0.03
Miscellaneous Washdown	0.31	0.42	1.00(2)
Total	1.83	1.61	1.17
Average		1.50	

(1) - Plant #987 contains two separate facilities labeled A and B for the purpose of comparison.

(2) - Includes steam condensate which is currently treated prior to discharge.

(3) - Mother liquor filter wash.

TABLE 24-5. FLOW AND POLLUTANT LOAD DATA OF THE SAMPLED WASTE STREAMS FOR PLANT #282 PRODUCING SODIUM BISULFITE[1]

Waste Stream	Flow (m^3/kkg)	TSS (kg/kkg)	COD (kg/kkg)
Untreated waste	2.67	UTD[2]	4.04
Treated waste	2.67	0.424	2.61

(1) - Data based on screening sampling which involves one 72 hour composite sample.

(2) - Unable to determine.

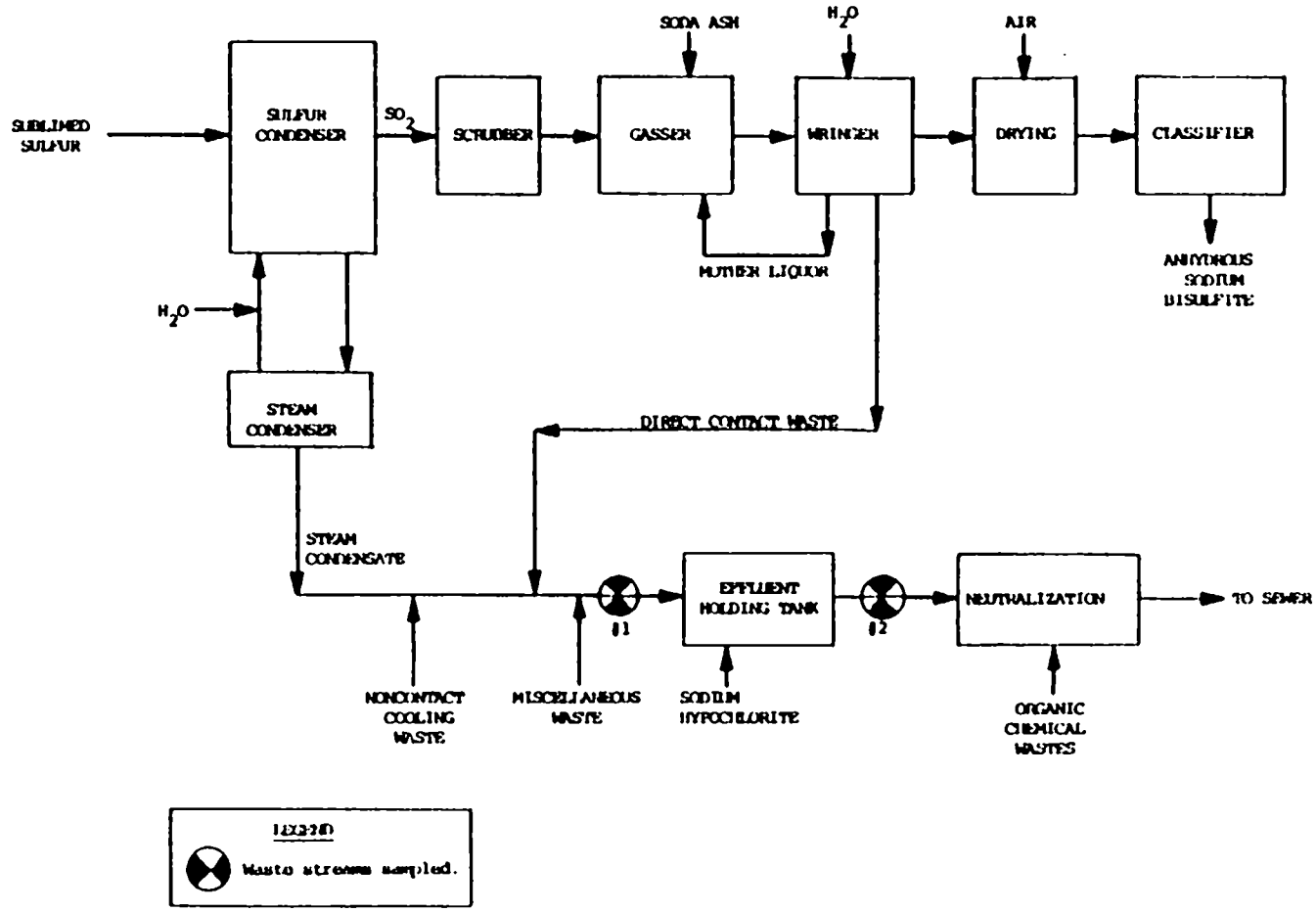

Figure 24-1. General process flow diagram at plant #282 showing the sampling points. Sodium bisulfite manufacture.

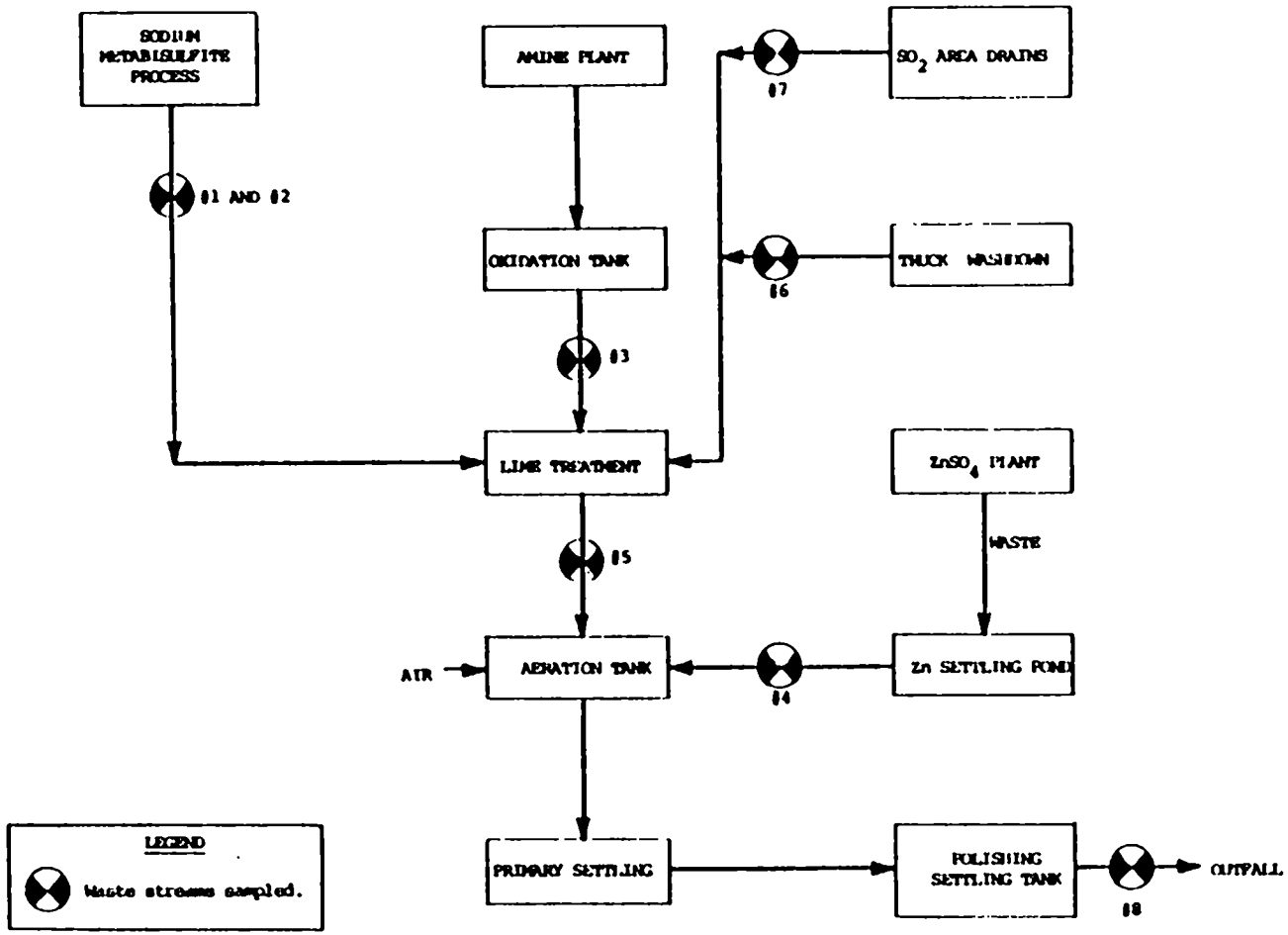

Figure 24-2. General flow diagram at plant #586 showing the sampling points. Sodium bisulfite manufacture.

TABLE 24-6. FLOW AND POLLUTANT LOAD DATA OF THE SAMPLED WASTE STREAMS FOR PLANT #586[1]

Stream Number	Waste Stream Description	Flow (m^3/kkg)	TSS (kg/kkg)	COD (kg/kkg)
1	MBS Sump #1	9.68[2]	0.19	1.1
2	MBS Sump #2	9.68[2]	0.051	0.46
	Total loads (1,2)	19.36	0.24	1.6
3	Amine Oxidation Pond	2.77[3]	2.4	2.3
4	$ZnSO_4$ Pond Effluent	78.54[3]	12	0.76
5	Lime Treatment Effluent	109.7[3]	11	29
6	Truck Washdown	0.134[3]	0.012	0.098
7	SO_2 Wastes	85.86[3]	2.0	53
8	Treated Effluent	188.3[4]	4.3	22
	Total loads (1,2,3,4,6,7)	187	17	57

(1) - Data based on verification sampling which involves three 24 hour composite samples.

(2) - Includes noncontact process water that does not contribute to the pollutant load.

(3) - Raw process waste flows that are not directly related to the sodium bisulfite industry, but are currently treated in combination with raw process waste that is related.

(4) - Treated effluent from combined treatment of a number of different raw process waste streams not all related to sodium sulfite production.

TABLE 24-7. FLOW AND POLLUTANT LOAD DATA OF THE SAMPLED WASTE STREAMS FOR PLANT #987[1]

Stream Number	Waste Stream Description	Flow (m^3/kkg)	TSS (kg/kkg)	COD (kg/kkg)
1	No. 1 Filter Wash	0.055	0.11	1.4
2	Floor wash, spill, etc.	0.013	0.046	0.30
3	No. 2 Filter Wash	0.041	0.0052	0.91
4	Raw Process Waste (Streams 1+2+3)	0.11	0.32	3.5
5	54 Hour Aeration	0.14	0.38	1.2
6	Treated Effluent	0.14	0.0031	1.0

(1) - Data based on verification sampling which involves three 24 hour composite samples.

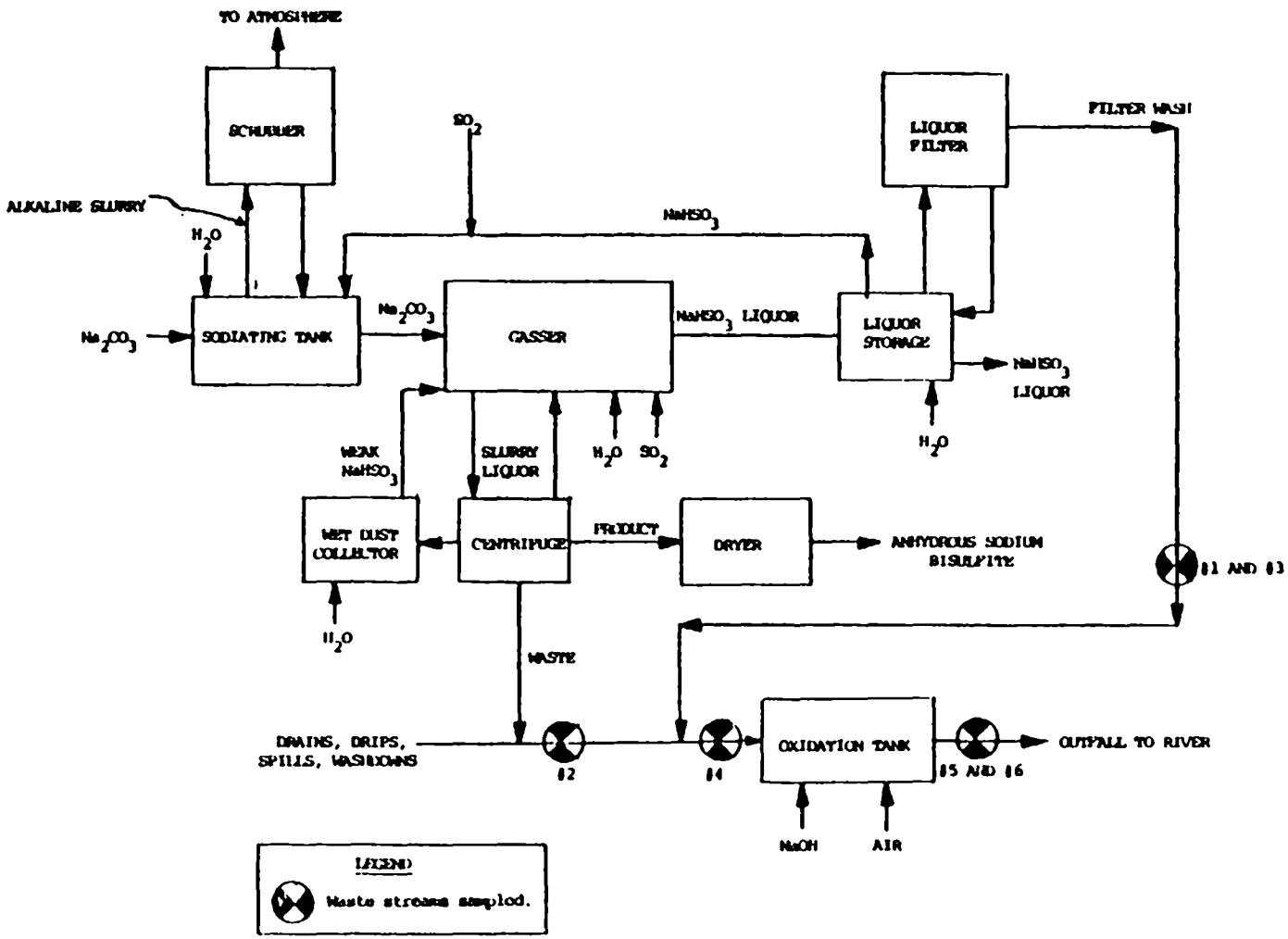

Figure 24-3. General process flow diagram at plant #987 showing the sampling points. Sodium bisulfite manufacture.

24.3.3 Toxic Pollutant Analytical Results

The following table is a tabulation of the toxic pollutants identified at detectable concentrations in the raw process waste during screening and verification. The concentration presented under verification represents the highest observed in the raw process waste during sampling. No organic toxic pollutants were found at detectable levels.

Pollutant	Maximum Raw Waste Concentrations Observed (µg/l) Screening Plant #282	Verification Plant #586 and #987
Arsenic	12	67
Copper	380	930
Zinc	2500	3600
Cadmium	6	41
Chromium	0	3400
Antimony	30	650
Lead	8	1100
Mercury	3	17
Nickel	250	460
Silver	2	15
Thallium	8	8

Section 5.1.2 of this report describes the methodology of the screening and verification sampling program. In the Sodium Bisulfite subcategory a total of seven days of sampling were conducted at Plants #282, #586, and #987. Sixteen different sampling points were identified for the various waste streams at these three plants. The evaluation of toxic metal content of these waste streams was based on 429 analytical data points and an additional 516 points for the toxic organic pollutants sampled during screening.

The daily raw waste loads were calculated from the waste stream flow rates measured or estimated at the time of sampling and the measured pollutant concentration.

That is,

$$\text{Daily loading (as kg of pollutant per day)} = \frac{(C)(Q)}{1000}$$

Where:

C is the concentration of the pollutant expressed in units of mg/l (Note: kg/m3 = 1000 mg/l), and

Q is the waste stream flow rate expressed in units of m3/day. (m3, a cubic meter, is equal to 264.2 U.S. gallons.) Similarly, the unit loadings were calculated from the reported sodium bisulfite production rate, the waste stream flow rate, and the measured pollutant concentration.

$$\text{Unit loading (as kg of pollutant per kkg of Sodium Bisulfite)} = \frac{(C)(Q)}{1000P}$$

Where C and Q are the same as described above, and P is the sodium bisulfite production rate expressed in units of kkg/day. (kkg is 1000 kg, a metric ton, which is equal to 2205 lbs.)

Table 24-8 presents the toxic pollutant unit loading and concentration at the three plants sampled. Each concentration repesents the average of three composite samples for verification and a single composite sample during screening.

In Table 24-9, the toxic pollutant raw waste data are presented as the minimum average and maximum unit loadings based on the results summarized for each plant in Table 24-8. The average unit loading is based on the average obtained at the three plants sampled.

Based on the total annual production of this subcategory and the average waste load generated per unit product, the estimated toxic pollutant raw waste loads generated each year for this subcategory are as follows:

Total Annual Pollutant Load

Pollutant	Raw Waste Load (kg/year)
Antimony	5.0
Cadmium	1.0
Chromium	1100.0
Copper	45
Lead	9.0
Mercury	0.60
Nickel	30
Zinc	520
Silver	6.2
Arsenic	2.3
Thallium	22

Table 24-10 presents the average toxic pollutant concentration observed during verification sampling.

TABLE 24-8. TOXIC POLLUTANT RAW WASTE LOADS

SUBCATEGORY	SODIUM BISULFITE					
POLLUTANT	PLANT AND SAMPLING PHASE					
	Screening (1) #282	#903	Verification (2) #987	#302	#586	#314
	(mg/l)	(kg/kkg)	(mg/l)	(kg/kkg)	(mg/l)	(kg/kkg)
Arsenic	0.012	0.000030	0.067	0.00001	0.0020	0.00003
Copper	0.38	0.0010	0.74	0.00007	0.018	0.00030
Zinc	2.5	0.0070	2.4	0.00020	0.52	0.0088
Cadmium	0.0060	0.000017	0.04	0.000004	0.0005	0.00001
Chromium			2.6	0.00030	1.3	0.022
Lead	0.0025	0.000007	0.6	0.00007	0.012	0.00020
Mercury	0.0030	0.000007	0.012	0.000001	0.00060	0.00001
Nickel	0.25	0.00070	0.46	0.00005	0.010	0.00017
Antimony	0.030	0.000070	0.65	0.00007	0.0050	0.00008
Thallium	0.0080	0.000020	<0.050	<0.000004	0.025	0.00042
Silver	0.0060	0.000017	<0.030	<0.000003	0.010	0.00017

(1) - One 72-hour composite sample

(2) - Average of three 24-hour composite samples

TABLE 24-9. SUMMARY OF RAW WASTE LOADINGS FOUND IN SCREENING AND VERIFICATION SAMPLING

SUBCATEGORY SODIUM BISULFITE

Pollutant	Loading Range (kg/day)		Unit Loading (kg/kkg)			No. of Plants
	Minimum	Maximum	Minimum	Average	Maximum	
Priority						
Antimony	0.00045	0.0041	0.000007	0.000052	0.000080	2
Cadmium	0.00023	0.00041	0.000004	0.000010	0.000017	3
Chromium	0.018	1.1	0.00030	0.011	0.022	2
Copper	0.0050	0.015	0.000070	0.00046	0.0010	2
Lead	0.000091	0.0095	0.000007	0.000092	0.00020	3
Mercury	0.000091	0.00045	0.000001	0.000006	0.000010	2
Nickel	0.0032	0.0091	0.000050	0.00031	0.00070	3
Zinc	0.016	0.42	0.00020	0.0053	0.0088	3
Silver	<0.00020	0.0080	<0.000003	0.000060	0.00017	3
Arsenic	0.00040	0.0014	0.000010	0.000023	0.000030	3
Thallium	<0.000052	0.020	<0.000004	0.00015	0.00042	3
Conventional						
Total Suspended Solids (TSS)						
	3.20	25.4	0.21	0.27	0.38	3
Chemical Oxygen Demand (COD)						
	54.4	234	1.33	2.94	4.04	3

(1) - Average of values obtained in Table 24-8 for those plants where the toxic pollutant was detected.

TABLE 24-10. TOXIC POLLUTANT CONCENTRATIONS OBSERVED IN TREATED EFFLUENT DURING VERIFICATION SAMPLING

Pollutant	Plant# #987 (mg/l)	#586 (mg/l)
Arsenic	ND	ND
Copper	0.27	ND
Zinc	0.010	ND
Cadmium	ND	ND
Chromium	0.11	ND
Lead	0.15	ND
Mercury	ND	0.010
Nickel	ND	0.050
Antimony	ND	0.020
Thallium	ND	ND
Silver	ND	ND

ND - Not Detected

24.4 POLLUTION ABATEMENT OPTIONS

24.4.1 Toxic Pollutants of Concern

It is reported that some sources of sodium carbonate contain zinc and other trace metals in measurable amounts. The screening and verification sampling program revealed zinc, chromium, copper, lead, nickel, mercury and antimony were at significant concentration levels which may require regulation. Zinc may enter the waste stream by corrosion of galvanized metals by coproduct operations or from nonprocess zinc compounds used by the industry. Cadmium, arsenic, thallium, and silver though detected in the raw waste are not at treatable concentrations and thus are not considered toxic pollutants of concern.

24.4.2 Prevailing Control and Treatment Practices

Plant #987 adds 50 percent caustic solution to the oxidation tank to raise the pH to approximately 9.5 and blows air through while mechanically agitating. The waste is discharged to a river following the 17-hour retention period.

Plant #282 uses caustic soda or sodium carbonate for pH control followed by sodium hypochlorite addition to oxidize sulfite and other reduced sulfur species. The waste is then neutralized and discharged to a County sewer.

Plant #586 mixes the bisulfite waste from an amine plant, and $ZnSO_4$ production wastes, and truck wash waste. Lime is added to the wastes which are then passed through an aeration tank with eight-hour's retention time. The treated waste goes through primary and secondary settling before final discharge.

24.4.3 Advanced Treatment Technologies

Toxic metals may be precipitated at alkaline pH values, when reacted with sulfides in various forms, in some cases by ion exchange resins, and the Xanthate process. Sulfide precipitation from cleared solutions could be used to provide additional removal of zinc, lead, nickel, copper, mercury, and to a lesser extent, antimony.

24.5 SELECTION OF APPROPRIATE TECHNOLOGY AND EQUIPMENT

24.5.1 Technologies for Different Treatment Levels

Level 1 (BPT/BAT)

Neutralization with caustic soda to a pH of 9.5 followed by aeration. This level was chosen as the most cost-effective method of lowering the COD associated with the primary pollutant, sodium bisulfite. The flow diagram is shown in Figure 24-4.

Level 2

Aerated effluent from the BPT system is chlorinated to complete COD removal, and is then filtered to remove finely divided suspended matter carried through or produced in the BPT system, particularly if toxic metals are present in the incoming wastes. The flow diagram is shown in Figure 24-5.

Level 3

Ferrous sulfide is applied ahead of the Level 2 dual media filter, to precipitate any residual metals by the more effective sulfide process. The flow diagram is shown in Figure 24-6.

24.5.2 Equipment for Different Treatment Levels

Equipment Functions

In Level 1, the raw wastes are received in a one-day holding tank, adjusted to pH 9.5 with caustic soda and jet aerated by recirculation of the daily batch. At the end of each day the batch is transferred to a reaction tank sized for one week's flow, which is continuously aerated by recirculation through air aspirators. On the sixth day the aerated weekly batch is discharged directly (Level 1) or through a dual media filter (Levels 2 and 3). At Level 2 continuous aeration is terminated early on the sixth day and the weekly batch is recirculated through the hydraulic eductor of a gas chlorinator to oxidize any residual COD. At Level 3, ferrous sulfide is added before filtering, to precipitate any residual toxic metals. If COD limits can be consistently met by long-period aeration, and if toxic metals are not found in the raw wastes, the advanced levels of treatment would serve no purpose.

Chemicals and Handling

Caustic soda solution, chlorine and ferrous sulfide are used in the treatment processes. Caustic soda and chlorine, are

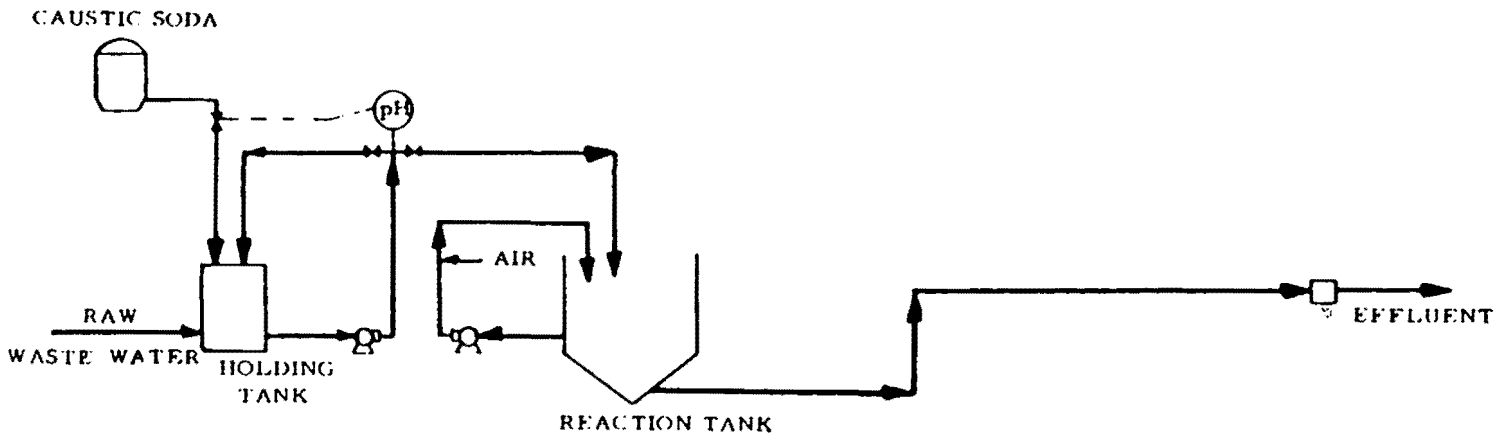

*Includes flow monitoring, pH monitoring, and sampler.

Figure 24-4. Level 1 waste water treatment for the sodium bisulfite subcategory batch process.

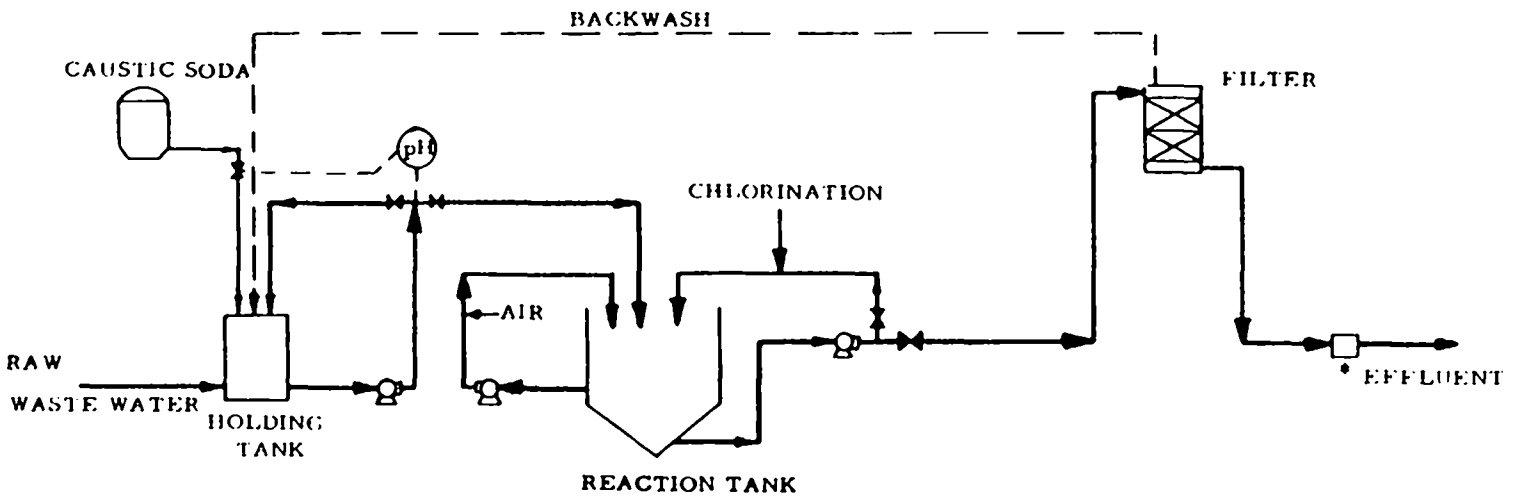

* Includes flow monitoring, pH monitoring, and sampler.

Figure 24-5. Level 2 waste water treatment for the sodium bisulfite subcategory batch process.

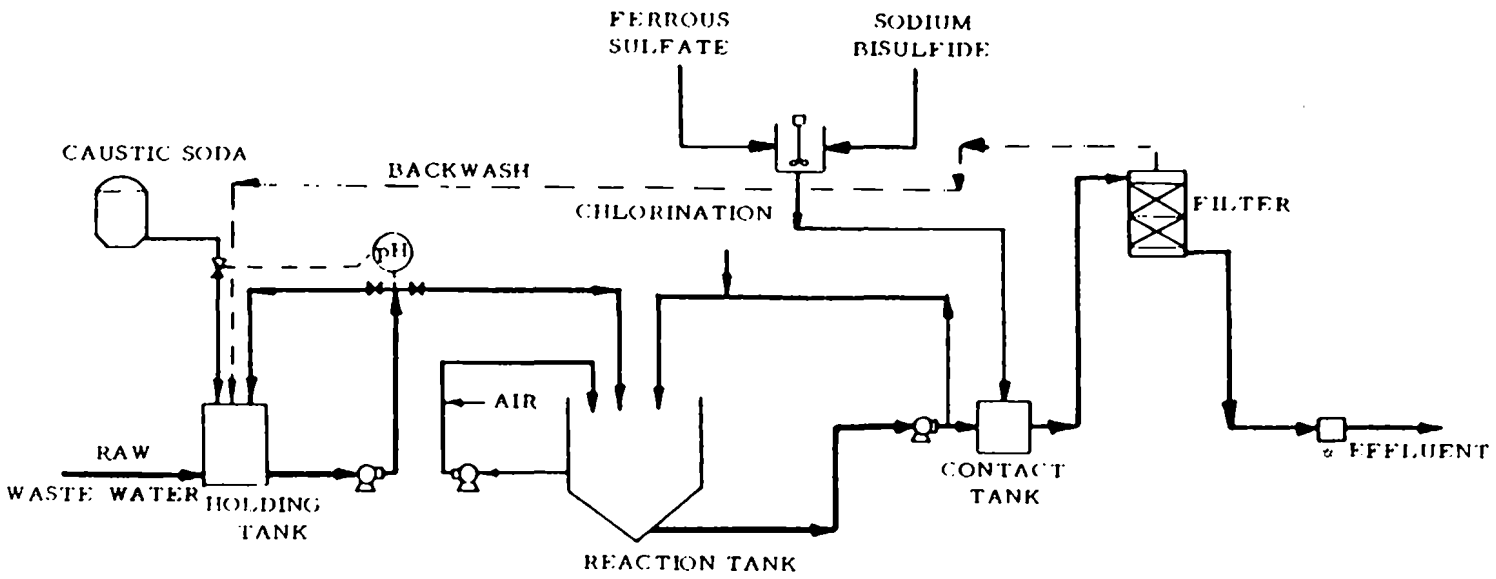

*Includes flow monitoring, pH monitoring and sampler.

Figure 24-6. Level 3 waste water treatment for the sodium bisulfite subcategory.

common industrial chemicals which are fed by conventional equipment designed to minimize leaks, spills, and hazards to personnel. Ferrous sulfide is prepared by mixing ferrous sulfate with sodium bisulfide under well ventilated conditions. When the usual precautions are taken in the proper handling of corrosive and toxic chemicals, there should be no special problems in applying the proposed technologies.

Separation and Removal of Solids

No solids are formed in the proposed treatment, with the possible exception of small amounts of metal hydroxides and sulfides in the filter backwash, if metals should be present in the raw wastes. In that event, the precipitated solids returned to the holding tank during backwashing will settle in the hopper bottom of the reaction tank. As necessary, these solids can be drawn off to a small earthen drying bed, where liquid will drain into the soil and and the insoluble metal compounds will remain at the site.

Monitoring Requirements

Internal process monitoring will be done with standard field equipment measuring pH, dissolved oxygen and chlorine. If metals are present in the raw materials a periodic laboratory analysis for metals should be made on the final effluent. Monitoring for dissolved sulfide should not be necessary, since excess sulfide will react with iron from the ferrous sulfate applied in Level 3, oxidizing to insoluble ferric sulfide.

24.6 TREATMENT COST ESTIMATES

24.6.1 General Discussion

Presented in this section are the preliminary treatment cost estimates that were developed for a model plant based on limited raw waste flow data. The flow rate used for these cost estimates was 0.23 m3/kkg. The model plant flow rate specification was later changed to 1.5 m3/kkg reflecting more accurate plant information (Table 24-4) and this value was used in regulation development. The need of revising the cost estimates is being evaluated and any appropriate adjustments will be made before promulgation. The model plant specifications given below were used for regulation development, and, except for the flow rate change noted, were also used for cost estimating purposes.

Waste Water Flow

The sources of waste water include wet air scrubbers, filter backwash, floor washings, leaks, and spills. The unit flow rates ranged from 1.8 m3/kkg to 1.2 m3/kkg of product at the three facilities for which 308 Questionnaires were available. The average was approximately 1.5 m3/kkg and this was used for the model plant (Table 24-4).

Production

Sodium bisulfite production ranges from 4770 kkg/yr to 31,800 kkg/yr at the three plants for which data was available. The average production is 17,800 kkg/yr. The production rates at the three plants were used as the model plant production rates. The operational mode is continuous and is assumed to run 350 days per year.

Solid Wastes

In the production of sodium bisulfite and process waste treatment there is little solid waste generation, although precipitation of metal hydroxides may result in small quantities of filter cake requiring disposal. The model plants assumed no significant solid waste production.

Treatment Chemicals

Caustic soda is needed to adjust the pH to 9.5. The only other requirement is air to oxidize the waste. For the model plant, the caustic soda dosage was assumed to be 0.195 kg/kkg.

24.6.2 Cost Estimates

The cost estimates of three models having different production levels are presented in Tables 24-11, 24-12 and 24-13. Annual costs for three treatment levels as a function of production are shown graphically in Figure 24-7. Treatment cost per metric ton of product is shown in Figure 24-8.

Table 24-14 gives a summary of the unit cost distribution between amortization, operation and maintenance. Cost components at various production and levels of treatment are also shown.

Cost estimates developed for the first level of treatment indicate that labor and amortization cost has a significant impact on the total annual costs. At the second and third level of treatment, for low production, operation and maintenance has a significant impact on the additional annual costs. At medium and high production, amortization and operation and maintenance costs constitute the major portion of the additional costs.

TABLE 24-11. MODEL PLANT TREATMENT COSTS

Subcategory Sodium Bisulfite

Production 4,770 metric tons per year[1] (5,258 tons per year)[1]
13 metric tons per day (15 tons per day)

Waste water flow 3.0 cubic meters per day.

	LEVEL OF TREATMENT [2]		
A. INVESTMENT COST	FIRST	SECOND	THIRD
Construction.....	$5,550	$1,650	$1,750
Equipment in place, inlcluding piping, fittings, electrical work and controls.....	47,800	20,500	21,400
Monitoring equipment in place.....	9,000		
Engineering design and inspection.....	12,470	4,430	4,630
Incidentals, overhead, fees, contingencies...	12,470	4,430	4,630
Land.....	1,800		
TOTAL INVESTMENT COST	$89,090	$31,010	$32,410
B. OPERATION AND MAINTENANCE COST			
Labor and supervision.	$15,000	$1,000	$2,000
Energy.....	1,600	60	75
Chemicals.....	400	1,200	1,210
Maintenance.....	8,729	3,101	3,241
Taxes and insurance...	2,672	930	972
Residual waste disposal.....			
Monitoring, analysis and reporting.....	2,500	1,250	1,250
TOTAL OPERATION AND MAINTENANCE COST	$30,901	$7,541	$8,748
C. AMORTIZATION OF INVESTMENT COST	$14,202	$5,045	$5,273
	$45,103	$12,586	$14,021

(1) - Based on 350 days per year.

(2) - First level represents the base cost of treatment system. Other levels represent the incremental cost above base cost.

TABLE 24-12. MODEL PLANT TREATMENT COSTS

Subcategory Sodium Bisulfite

Production 16,900 metric tons per year[1] (18,632 tons per year)[1]
48 metric tons per day (53 tons per day)
Waste water flow 10 cubic meters per day.

	LEVEL OF TREATMENT[2]		
	FIRST	SECOND	THIRD
A. INVESTMENT COST			
Construction.....	$8,500	$4,100	$4,200
Equipment in place, including piping, fittings, electrical work and controls.....	82,400	37,150	38,050
Monitoring equipment in place.....	9,000		
Engineering design and inspection.....	19,980	8,250	8,450
Incidentals, overhead, fees, contingencies...	19,980	8,250	8,450
Land.....	1,800		
TOTAL INVESTMENT COST	$141,660	$57,750	$59,150
B. OPERATION AND MAINTENANCE COST			
Labor and supervision.	$15,000	$1,000	$2,000
Energy.....	3,100	90	110
Chemicals.....	1,340	2,560	2,600
Maintenance.....	13,986	5,775	5,915
Taxes and insurance...	4,249	1,732	1,774
Residual waste disposal.....			
Monitoring, analysis and reporting.....	2,500	1,250	1,250
TOTAL OPERATION AND MAINTENANCE COST	$40,175	$12,407	$13,649
C. AMORTIZATION OF INVESTMENT COST	$22,755	$9,395	$9,623
TOTAL ANNUAL COST	$62,930	$21,802	$23,272

(1) - Based on 350 days per year.

(2) - First level represents the base cost of treatment system. Other levels represent the incremental cost above base cost.

TABLE 24-13. MODEL PLANT TREATMENT COSTS

Subcategory Sodium Bisulfite

Production	31,800 metric tons per year[1]	(35,059 tons per year)[1]
	90 metric tons per day	(100 tons per day)
Waste water flow	19 cubic meters per day.	

	LEVEL OF TREATMENT[2]		
	FIRST	SECOND	THIRD
A. INVESTMENT COST			
Construction.....	$12,400	$6,250	$6,450
Equipment in place, including piping, fittings, electrical work and controls.....	123,900	63,700	64,900
Monitoring equipment in place.....	9,000		
Engineering design and inspection.....	29,060	13,990	14,270
Incidentals, overhead, fees, contingencies...	29,060	13,990	14,270
Land.....	3,000		
TOTAL INVESTMENT COST	$206,420	$97,930	$99,890
B. OPERATION AND MAINTENANCE COST			
Labor and supervision.	$15,000	$1,000	$2,000
Energy.....	6,200	90	132
Chemicals.....	2,700	4,840	4,910
Maintenance.....	20,342	9,793	9,989
Taxes and insurance...	6,192	2,937	2,996
Residual waste disposal.....			
Monitoring, analysis and reporting.....	2,500	1,250	1,250
TOTAL OPERATION AND MAINTENANCE COST	$52,934	$19,910	$21,277
C. AMORTIZATION OF INVESTMENT COST	$33,096	$15,933	$16,252
TOTAL ANNUAL COST	$86,030	$35,843	$37,529

(1) - Based on 350 days per year.

(2) - First level represents the base cost of treatment system. Other levels represent the incremental cost above base cost.

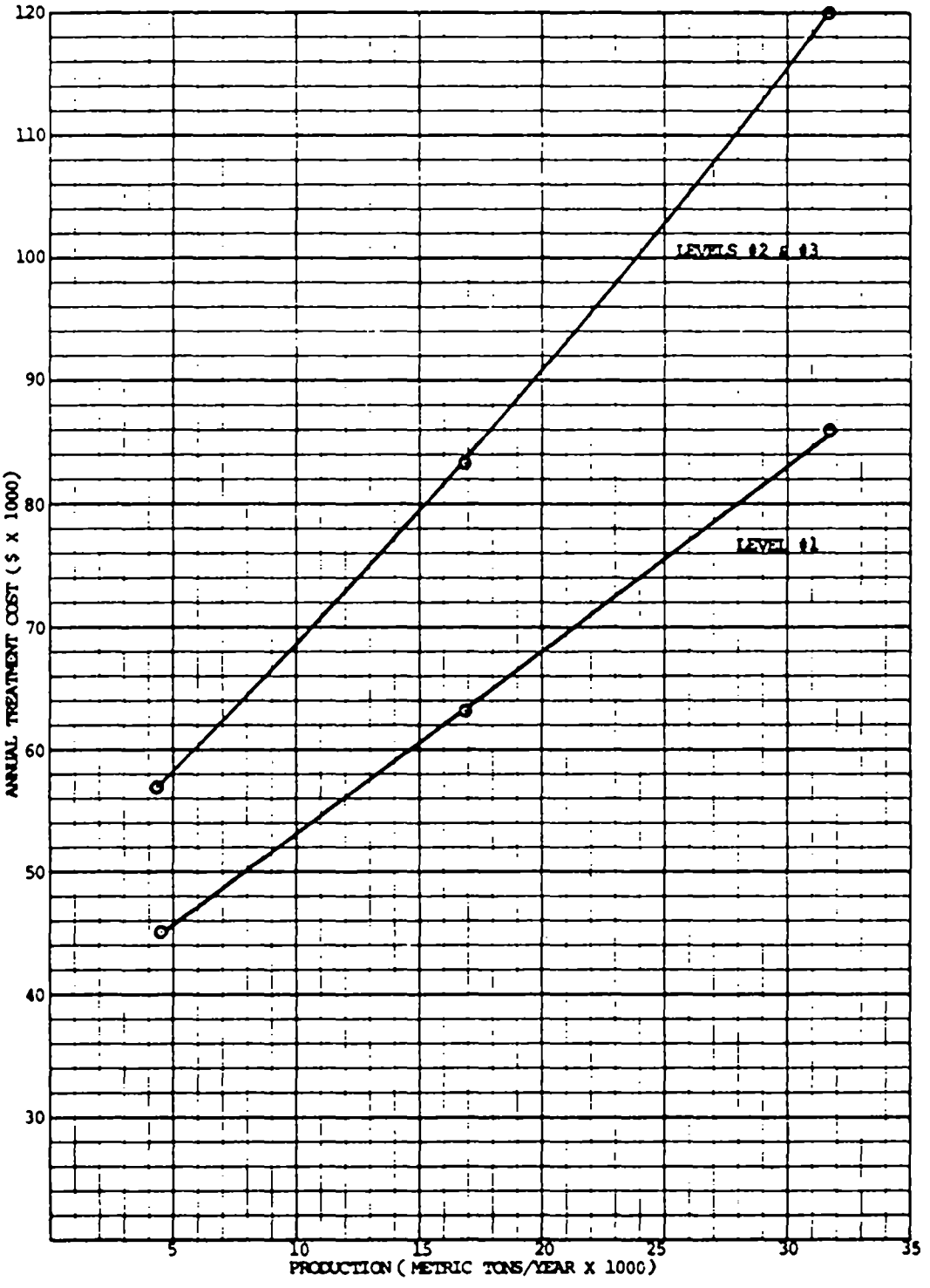

Figure 24-7. Variation of annual treatment cost with production for the sodium bisulfite subcategory.

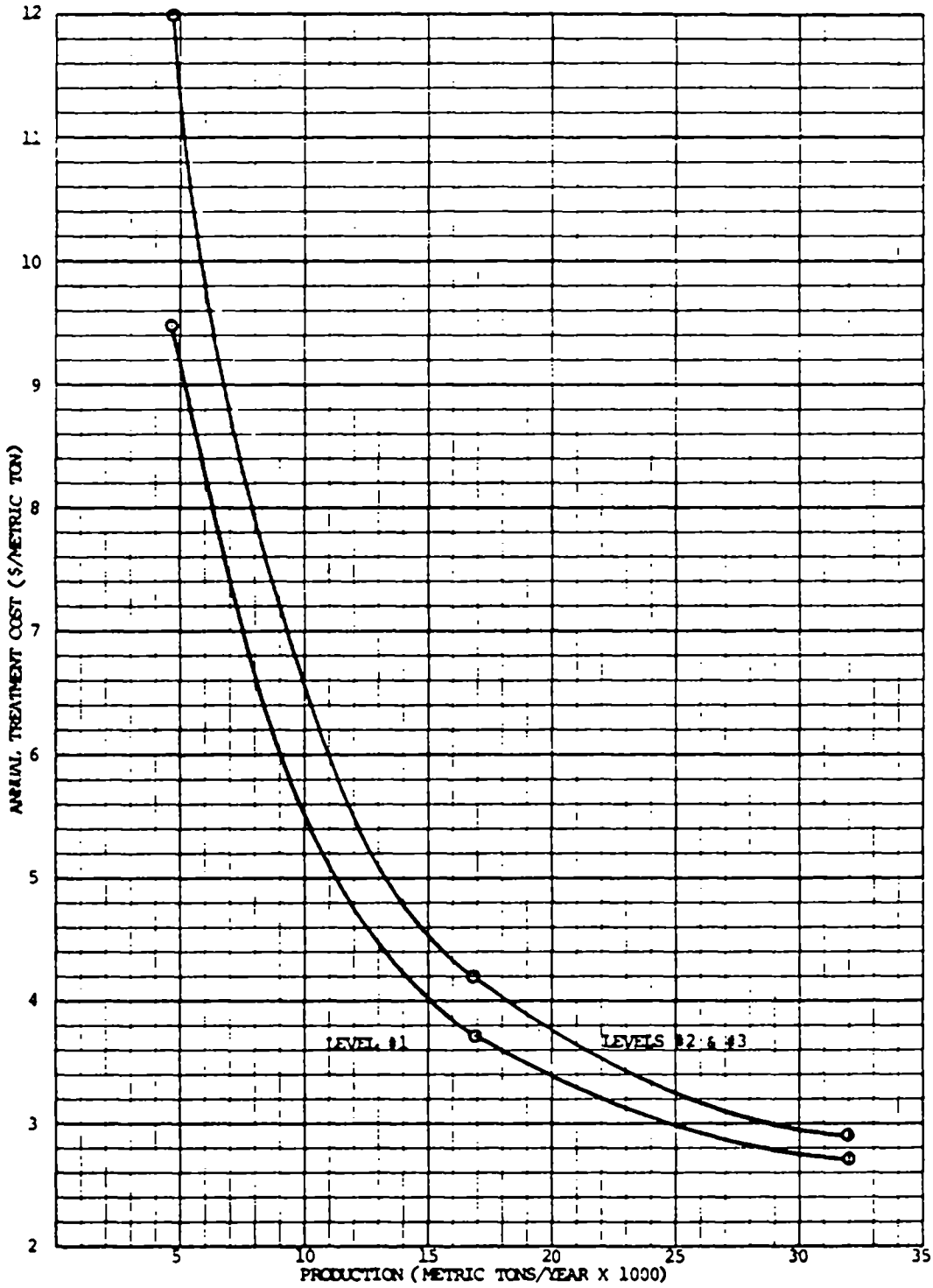

Figure 24-8. Variation of annual unit treatment cost with production (sodium bisulfite manufacture).

TABLE 24-14. MODEL PLANT TREATMENT COSTS

Subcategory Sodium Bisulfite

COST ITEMS	PRODUCTION FLOW (kkg/yr)	(m^3/day)	Annual Treatment Costs ($/kkg) LEVEL OF TREATMENT FIRST	SECOND	THIRD	FOURTH
Annual Operation and Maintenance	4,770	3	6.48	1.58	1.83	Not Applicable
	16,900	10	2.38	0.73	0.81	
	31,800	10	1.66	0.63	0.67	
Annual Amortization	4,770	3	2.98	1.06	1.11	
	16,900	10	1.35	0.56	0.57	
	31,800	19	1.04	0.50	0.51	
Total Cost	4,770	3	9.46	2.64	2.94	
	16,900	10	3.72	1.29	1.38	
	31,800	19	2.71	1.13	1.18	

24.7 BASIS FOR REGULATIONS

24.7.1 Evaluation of BPT Treatment Practices

All seven plants in this subcategory have installed BPT or equivalent technology. Plant performance was estimated on the basis of verification sampling results for Plant #987. Plant #282 was excluded from the evaluation since the treatment technology applied at the particular point of treated effluent sampling, does not represent the appropriate level of treatment. Plant #586 was excluded from consideration, since the combined treatment of the sodium bisulfite process waste with wastes from other unrelated processes, has made an evaluation of the plant performance data too speculative.

Table 24-15 is a summary of the subcategory performance evaluation for the conventional and nonconventional pollutants (TSS and COD). The data used in this Table is from screening and verification sampling results in Tables 24-5, 24-6, and 24-7 for Plants #282, #586, and #987, respectively.

The toxic pollutant performance evaluation is summarized in Table 24-10 in Section 24.3.3. This Table shows the treated effluent concentration data for the toxic pollutants of concern.

24.7.2 Basis for Proposed BPT Effluent Limitations

Technology Basis

The Agency proposes hydroxide precipitation of toxic metals with caustic soda plus batch aeration and settling for BPT treatment. The flow schematic for BPT is shown in Figure 24-4 in Section 24.5.1 as Level 1 treatment. The Agency has selected Level 1 treatment as the basis for BPT because it reflects current industry practice.

Flow Basis

The basis of flow for BPT limitations is estimated from data provided in the 308 Questionnaires for two of the three complete plant responses, including plant #987 and #282. Plant #586 was omitted in view of the lack of adequate information to identify the waste water streams contributed by the Sodium Bisulfite process alone.

The three major raw process waste water streams include direct and indirect process contact waste and miscellaneous floor and tank washdown waste water.

Table 24-4 summarizes the unit flows reported for each of the three sources at each facility. Plant #987 has two

TABLE 24-15. PLANT PERFORMANCE EVALUATION SUMMARY FOR CONVENTIONAL AND NONCONVENTIONAL POLLUTANTS

Plant #And Sampling Phase	Stream Description	Flow (m^3/kkg)	TSS (mg/l)	TSS (kg/kkg)	COD (mg/l)	COD (kg/kkg)
#282(1) (Screening)	Raw Waste	2.67	UTD(4)	UTD(4)	1500	4.0
	Treated Effluent	2.67	160	0.42	980	2.6
	Treated Effluent	1.5(3)	280	0.42	1700	2.6
#586(2) (Verification)	Raw Waste	19.36	13	0.24	82	1.6
	Treated Effluent	19.36	3.3	0.063	31.0	0.60
	Treated Effluent	1.5(3)	42(5)	0.063	400(5)	0.60
#987 (Verification)	Raw Waste	0.14	2,250	0.32	24,700	3.5
	Treated Effluent	0.14	22(7)	0.003	7,300	1.0
	Treated Effluent	1.5(3)	-- (6)	0.003	680	1.0 (7)

(1) - Plant #282 treatment data was excluded from consideration since the treatment technology applied at the point of sampling does not represent the appropriate level of treatment.

(2) - Plant #586 treatment data was excluded from consideration, since the combined treatment of the sodium bisulfite process waste with wastes from other unrelated processes, has made an evaluation of the plant performance too speculative.

(3) - Model plant flow developed in Table 24-4 was used to adjust the concentration of TSS and COD for comparative purposes as follows:

$$\text{Concentration (mg/l)} = \frac{\text{Load (kg/kkg)}}{1.5\ m^3/\text{kkg}} \left(\frac{1000\ \text{mg/l}}{\text{kg}/m^3}\right)$$

(4) - UTD - unable to determine.

(continued)

TABLE 24-15. (continued)

(5) - Determined in the following manner for COD from data presented in Table 24-6 for Plant #586:

Step 1 - Percent COD Removed = 100% $\frac{21.70}{57.28}$ x 100% = 62%

Step 2 - Effluent COD Load = 1.58 kg/kkg$\left(\frac{100 - 62}{100}\right)$= 0.60 kg/kkg

Step 3 - From footnote (3)

$$\left(\frac{0.60 \text{ kg/kkg}}{1.5 \text{ m}^3\text{/kkg}}\right)\left(\frac{1000 \text{ mg/l}}{\text{kg/m}^3}\right) = 400 \text{ mg/l}$$

(6) - TSS may not be adjusted to the model plant flow since the flow observed during sampling is less than the model plant flow. In other words, an additional load may contribute to the TSS from sources not considered.

(7) - Subcategory performance is based on concentration for TSS adjusted by the model plant flow to determine the unit load limitation; whereas, the COD limitation may be based on load.

facilities which manufacture sodium bisulfite and are designated as A and B. The basis of model plant flow for the Sodium Bisulfite industry is estimated as the average total raw waste water flow for the three plants, and is used to estimate pollutant discharge loadings for the purpose of regulation. The average total flow for the three facilities considered is 1.5 m3/kkg of product.

Selection Basis for Pollutants to be Regulated

The selection of pollutants for which specific numerical effluent limitations are proposed was based on an evaluation of raw waste data from the screening and verification sampling program. Pollutant data from the plant sampled during screening was used to determine the need for verification sampling. Verificiation sampling at plant #586 and #987 provided additional pollutant raw waste concentration data needed to assess the performance of treatment technology.

Results of the screening and verification sampling are tabulated in Table 24-10 for toxic pollutants and 24-15 for conventional and nonconventional pollutants for the raw process waste streams. The pollutant concentration listed under verification is the highest value observed during sampling at the two plants visited.

Toxic pollutants are listed based on their presence, during sampling, at treatable concentration levels. Pollutants from this list were considered as candidates for regulation if their concentration appeared at least to equal or exceed the lowest level estimated as treatable using any available technology appropriate for their removal.

The relative significance of the candidate pollutants was estimated based on the total annual raw waste load for each pollutant which appears in a Table in Section 24.3.3. The total annual load is based on the average concentration observed during screening and verification which is tabulated in Table 24-9 in addition to the estimated annual production of 98,000 kkg of product for the industry.

Specific numerical effluent loading limitations were proposed only for those candidate pollutants which appeared at average concentration levels (Table 24-8) considered to be treatable for at least one plant visited during sampling.

On the basis of concentration and total annual raw waste loads determined during sampling, chromium, zinc, copper, nickel, lead, antimony and mercury have been identified at significant concentration levels in the raw waste stream and are also candidates for regulation. These toxic pollutants are

listed in order of their relative significance with regard to decreasing raw waste concentration.

In view of the treatment technology currently practiced and the related nature of the candidate pollutants, control of the more significant pollutants should ensure adequate control of those metals which may occasionally appear at treatable levels.

The Agency is conducting treatability studies using Level 1 (BPT) technology on typical raw waste water from the sodium bisulfite industry. In conjunction with this work, use of the standard iodide-iodate test for sulfite is being evaluated for possible application in effluent monitoring. The results of these studies will be available prior to promulgation.

Basis of Pollutant Limitations

Conventional and nonconventional parameters

A. pH: The treated effluent is to be controlled within the range of 6.0 to 9.0. This limitation is based on the data presented in Appendix B of this report and the JRB Study (52).

B. TSS and COD: The verification sampling data presented in Table 24-15 was used for the development of total suspended solids (TSS) and Chemical Oxygen Demand (COD) limitations. Data from Plant #987 was used since this plant is the only one available where the effect of BPT technology could be clearly observed. Plants #282 and #586 were excluded from consideration as previously discussed in Section 24.7.2.

The estimated 30-day average concentration was used for both TSS and COD in conjunction with the model plant flow to establish the regulations in Table 24-16. The mass load limitation is determined from the pollutant concentration, C, as follows:

$$L = C \frac{(\text{as mg/l})\ (Q)}{1000}$$

Where L is the effluent limitation expressed as a unit loading in kg of pollutant per kkg of product (kg/kkg), and Q is the flow rate expressed as cubic meters per kkg of product (m3/kkg). (Note: kg/m3 = 1000 mg/l.)

In view of the lack of long term plant performance data for all pollutants of concern, a variability factor ratio (VFR) is estimated based on data from other subcategories with similar pollutants. The VFR is required to determine the 24-hour maximum limitation by the following relationship:

TABLE 24-16. PROPOSED LIMITATIONS

SODIUM BISULFITE

Best Practicable Control Technology Currently Available(6)

Waste Water Flow: 1.5 m^3/kkg

Pollutant	Subcategory Performance (mg/l)	VFR(1)	Concentration Basis (mg/l) 30-day Avg	24-hr Max	Effluent Limit (kg/kkg) 30-day Avg	24-hr Max
Conventional and nonconventional Pollutants:						
Total Suspended Solids, TSS(5)	22	3.6	22	79	0.033	0.12
Chemical Oxygen Demand, COD (6)	680	3.6	680	2400	1.0	3.7
Toxic Pollutants:						
Chromium(6)	0.11(4)	1.9	0.11	0.21	0.00017	0.00032
Zinc(6)	0.50(3)	1.9	0.50	0.95	0.00075	0.0014
Copper (6)	0.50(3)	1.9	0.50	0.95	0.00075	0.0014
Lead(6)	0.30(3)	1.9	0.30	0.57	0.00045	0.00086
Nickel(6)	0.20(3)	1.9	0.20	0.38	0.00030	0.00057
Mercury	0.010(4)	1.9	0.010	0.02	___(7)	___(7)
Antimony	0.80(3)	1.9	0.80	1.5	___(7)	___(7)

(1)- VFR: ratio of the 24 hour variability factor to the 30-day variability factor.

(2)- Based on verification data in Table 24-15.

(3)- The lower limit of literature treatability estimate (Table 8-11) is used as the basis for the 30-day average limitation when the observed average of the sampling data is below this level.

(4)- Average effluent concentration from screening and verification sampling data.

(5)- Also proposed for NSPS regulations.

(6)- Also proposed for NSPS, BAT, PSES, and PSNS regulations.

(7)- No effluent limitation proposed.

24-hr maximum = (30-day average)(VFR)

Where the VFR is the ratio of the variability factor for daily (24-hr) measurements to the variability factor for 30-day averages. The VFR selected for use in the Sodium Bisulfite subcategory is 3.6 for the TSS and COD based on the 30-day average and daily maximum variability factors for TSS in the Titanium Dioxide Subcategory long-term data (Table A-9a-1 and A-9c-1 in Appendix A). Justification for the use of performance data from the Ti02 industry rests on the fact that a similar TSS removal technology is applied and the effluent concentrations are similar to those observed in the Sodium Bisulfite industry (Table 24-15). In view of the intermittent discharge of raw process waste in the Sodium Bisulfite Subcategory, a high VFR is anticipated which is consistent with the value selected.

The maximum 30-day average concentration for TSS developed from the verification sampling data is 22 mg/l (Table 24-15). The proposed limitation is determined as follows:

$$(22\ mg/l)(1.5\ m3/kkg)\left(\frac{kg/m3}{1000\ mg/l}\right) = 0.033\ kg/kkg$$

The proposed 24-hour maximum limitation for TSS then becomes:

$$(0.033\ kg/kkg)(3.6) = 0.12\ kg/kkg$$

The 30-day average concentration for COD developed from the verification sampling data is 680 mg/l (Table 24-15). The proposed maximum 30-day average limitation is determined similarly:

$$(680\ mg/l)(1.5\ m3/kkg)\left(\frac{kg/m3}{1000\ mg/l}\right) = 1.0\ kg/kkg$$

The proposed 24-hour maximum limitation for COD then becomes:

$$(1.0\ kg/kkg)(3.6) = 3.6\ kg/kkg$$

The proposed limitations are summarized in Table 24-16.

Toxic pollutants

The proposed effluent limitations for the selected toxic pollutant control parameters are based on three information sources including: 1) screening and verification data 2) literature based treatability estimates (Section 8.1), and 3) long term monitoring data for the Titanium Dioxide Subcategory.

The sampling data tabulated in Table 24-10 for the treated effluent at Plant #987 and #586 is used to determine the estimated plant performance in the subcategory. Review of the data and comparison with Table 8-11 for alkaline precipitation and settling, reveals that all toxic pollutants of concern are currently treated below the generally accepted limits of treatability. The lower limits of treatability from literature data in Table 8-11 are therefore used for the purpose of regulation development.

The variability factor ratio (VFR) was estimated for the toxic pollutants in a similar manner as previously discussed for TSS and COD. The VFR is estimated from the Titanium Dioxide Subcategory long term monitoring data for chromium and zinc since these control parameters are of the greatest concern. The data in Tables A-9a-1 and A-9c-1 indicate a VFR of 1.9 which is used for the purpose of regulation development for the toxic pollutants, because the treatment technologies are similar.

The basis for determining the proposed BPT limitations presented in Table 24-16 for each of the toxic pollutant metals is as follows:

A. Chromium: The raw waste concentration of chromium varied between 1.3 and 2.6 mg/l at Plant #586 and #987 respectively, and was observed as high as 3.4 mg/l (Table 24-8). BPT treatment performance indicated that chromium is currently removed to an average concentration of 0.11 mg/l (Table 24-10). The concentration of 0.11 mg/l has been selected as the basis for the proposed maximum 30-day average limitation which is obtained as follows:

$$(0.11\ \text{mg/l})(1.5\ \text{m3/kkg})\left(\frac{\text{kg/m3}}{1000\ \text{mg/l}}\right) = 0.00017\ \text{kg/kkg},$$

and the propsed 24-hour maximum limitation is:

$$(0.00017\ \text{kg/kkg})(1.9) = 0.00032\ \text{kg/kkg}$$

The proposed limitations are tabulated in Table 24-16.

B. Zinc: The raw waste concentration of zinc varied between 0.5 and 2.5 mg/l, and was observed on one occasion as high as 3.6 mg/l (Table 24-8). BPT treatment performance indicates that zinc is currently removed to a concentration of 0.01 mg/l (Table 24-10). The literature treatability value of 0.5 mg/l from Table 8-11 has been selected for the purpose of regulation. The proposed maximum 30-day average limitation is determined as follows:

$$(0.50\ mg/l)(1.5\ m3/kkg)\left(\frac{kg/m3}{1000\ mg/l}\right) = 0.00075\ kg/kkg$$

The 24-hour maximum limitation is then:

$$(0.00075\ kg/kkg)(1.9) = 0.0014\ kg/kkg$$

C. Copper: The raw waste concentration of copper varied between 0.02 and 0.74 mg/l, and was observed on one occasion as high as 0.93 mg/l (Table 24-8). BPT treatment performance data reveals that copper is currently removed to a concentration of 0.27 mg/l (Table 24-10) compared with 0.5 mg/l (Table 8-11) reported in the literature for similar treatment. The higher value of 0.5 mg/l from the literature is conservatively selected as the basis for determining the maximum 30-day average limitation as follows:

$$(0.5\ mg/l)(1.5\ m3/kkg)\left(\frac{kg/m3}{1000\ mg/l}\right) = 0.00075\ kg/kkg$$

The corresponding 24-hour maximum limitation is then:

$$(0.00075\ kg/kkg)(1.9) = 0.0014\ kg/kkg$$

D. Lead: The raw waste concentration of lead varied between 0.003 and 0.66 mg/l, and on one occasion as high as 1.05 mg/l (Table 24-8). The BPT treatment performance data reveals that lead is currently removed to a concentration of 0.15 mg/l (Table 24-10) compared with 0.30 mg/l reported in the literature (Table 8-11) for similar treatment. The higher value of 0.30 mg/l is conservatively used to determine the maximum 30-day average concentration as follows:

$$(0.30\ mg/l)(1.5\ m3/kkg)\left(\frac{kg/m3}{1000\ mg/l}\right) = 0.00045$$

The 24-hour maximum limitation is then:

$$(0.00045\ kg/kkg)(1.9) = 0.00086\ kg/kkg$$

E. Nickel: The raw waste concentration of nickel varied between 0.01 and 0.46 mg/l which was the highest concentration observed (Table 24-8). The BPT treatment performance data reveals that nickel is currently removed to a concentration of 0.05 mg/l (Table 24-10) compared with 0.2 mg/l reported in the literature (Table 8-11) for similar treatment. The higher value of 0.2 mg/l is conservatively used to determine the maximum 30-day average limitation as follows:

$$(0.20\ mg/l)(1.5\ m3/kkg)\left(\frac{kg/m3}{1000\ mg/l}\right) = 0.0003\ kg/kkg,$$

and the proposed 24-hour maximum limitation is then:

$$(0.0003\ kg/kkg)(1.9) = 0.00057\ kg/kkg$$

F. Other Metals: The concentration bases for mercury and antimony are also presented in Table 24-16. These are intended to serve as guidance in cases where these pollutants are found to be of water quality concern.

24.7.3 Basis for Proposed BCT Effluent Limitations

The BCT limitation (applicable only to TSS) was set equal to BPT because BAT is equal to BPT.

24.7.4 Basis for Proposed BAT Effluent Limitations

The Application of Advanced Level Treatment

The Agency has analyzed the cost effectiveness of the base level systems (BPT) and the various advanced level options for conventional and toxic pollutant removal based on the cost estimates presented in this report. The regulations being proposed for BAT consist of Level 1 or BPT treatment. The removal of additional pollutants by Levels 2 and 3 treatment systems is not sufficient to offset the additional cost to install and operate these advanced treatment systems.

Technology Basis

The proposed BAT treatment system is the same as that described for BPT in Section 24.7.2.

Flow Basis

The model plant flow developed for BPT treatment applies also to BAT in the development of the regulations. Therefore the value of 1.5 m3/kkg of product is used for the unit flow.

Selection of Pollutants to be Regulated

For the BAT regulations, the Agency proposes the regulation of COD and the same five toxic metals considered for BPT limitations listed in Table 24-16.

Basis of Pollutant Limitations

Nonconventional pollutants - The only nonconventional pollutant is COD in the Sodium Bisulfite subcategoy. Since BAT has been set equal to BPT by the Agency, the proposed limitation is then identical to BPT for COD. Refer to Table 24-16 for the proposed BAT regulations.

Toxic pollutants - The Agency proposes limitations on chromium, zinc, copper, lead, and nickel which equal those for BPT. Refer to Section 24.7.2 for the development of these limitations. Tables 24-17 and 24-18 are provided for comparative purposes with more advanced levels of treatment.

24.7.5 Basis for Proposed New Source Performance Standards

The NSPS limitations (applicable to pH, TSS, COD and five toxic metals) was set equal to BAT for toxic pollutants and nonconventional and BPT for conventional pollutants. Table 24-16 for the BPT and BAT limitations would be identical in all respects with NSPS limitations. Refer to Section 24.7.2 for the development of the regulations.

24.7.6 Basis for Proposed Pretreatment Standards

Exisiting Sources

The Agency is proposing limitations based on BAT treatment technology for Pretreatment Standards for Existing Sources (PSES). The pollutants to be limited are COD, chromium, zinc, copper, lead and nickel as indicated in Table 24-16.

New Sources

For Pretreatment Standards for New Sources (PSNS), the Agency is proposing limitations based on PSES.

TABLE 24-17. PERFORMANCE OF ALTERNATIVE TECHNOLOGY

SODIUM BISULFITE

Level of Treatment: 2

Waste Water Flow: 1.5 m^3/kkg

Pollutant	Treatability (mg/l)	VFR(1)	Concentration Basis (mg/l)	
			Max 30-day Avg	24-hr Max
Conventional and nonconventional Pollutants:				
Total Suspended Solids, TSS	15	3.6	15	54
Chemical Oxygen Demand, COD	100	3.6	100	360
Toxic Pollutants:				
Chromium	0.050	1.9	0.050	0.095
Zinc	0.40	1.9	0.40	0.76
Copper	0.10	1.9	0.10	0.19
Lead	0.060	1.9	0.060	0.11
Nickel	0.10	1.9	0.10	0.19
Mercury	0.010	1.9	0.010	0.019
Antimony	0.40	1.9	0.40	0.76

(1) - VFR: ratio of the 24-hour variability factor to the 30-day variability factor.

TABLE 24-18. PERFORMANCE OF ALTERNATIVE TECHNOLOGY

SODIUM BISULFITE

Level of Treatment: 3
Waste Water Flow: 1.5 m^3/kkg

Pollutant	Treatability (mg/l)	VFR (1)	Concentration Limit (mg/l) Max 30-day Avg	24-hr Max
Conventional and nonconventional Pollutants:				
Total Suspended Solids, TSS	15	3.6	15	
Chemical Oxygen Demand, COD	100	3.6	100	
Toxic Pollutants:				
Chromium	0.050	1.9	0.050	0.095
Zinc	0.20	1.9	0.020	0.38
Copper	0.050	1.9	0.050	0.095
Lead	0.10	1.9	0.050	0.19
Nickel	0.10	1.9	0.050	0.19
Mercury	0.010	1.9	0.010	0.019
Antimony	0.40	1.9	0.40	0.76

(1) - VFR: ratio of the 24-hour variability factor to the 30-day variability factor.

Intentionally Blank Page

SECTION 25

SODIUM HYDROSULFITE INDUSTRY

25.1 INDUSTRY PROFILE

25.1.1 General Description

Most of the sodium hydrosulfite produced in the U.S. is sold in the merchant market. Sodium hydrosulfite is used extensively in dyeing cotton and in the printing industry. It is a powerful reducing agent and is used in wood pulp bleaching, and stripping operations in the food, vegetable oil and soap industries.

The industry profile data are presented in Table 25-1, while status of regulations are summarized in Table 25-2.

25.1.2 General Process Description and Raw Materials

In the formate process, sodium hydrosulfite is produced by reacting sodium formate solution, sodium hydroxide solution and liquid sulfur dioxide in the presence of a recycled stream of methanol solvent. The general reaction is:

$$HCO_2Na + 3NaOH + 3SO_2 = Na_2S_2O_4 + NaHCO_3 + Na_2SO_3 + CO + 2H_2O \quad (1)$$

The operation occurs in several steps:

1. An aqueous solution of sodium formate is prepared and introduced into the reactor.

2. The recycled stream of methanol containing sulfur dioxide is introduced into the reactor.

3. The sodium hydroxide and sodium formate solutions,liquid sulfur dioxide, and recycled methanol are then contacted under pressure at slightly elevated temperatures.

TABLE 25-1. SUBCATEGORY PROFILE DATA SUMMARY

SUBCATEGORY	SODIUM HYDROSULFITE (FORMATE PROCESS)
Total subcategory capacity rate	40,340 kkg/year
Total subcategory production rate	39,940 kkg/year
Number of plants in this subcategory	2
308 Data on file for	1
With total capacity of	20,450 kkg/year
With total production of	20,450 kkg/year
Representing capacity	50 percent
Representing production	51 percent
Plant production range:	
Minimum	NA
Maximum	NA
Average production	NA
Median production	NA
Average capacity utilization	100 percent
Plant age range:	
Minimum	NA
Maximum	NA
Wastewater flow range:	273 cubic meters/day
Minimum	NA
Maximum	NA
Volume per unit product:	4.68 cubic meters/kkg
Minimum	NA
Maximum	NA

Sources of data are Stanford Research Institute, Directory of Chemical Producers, U.S.A., 1977, U.S. Department of Commerce, Current Industrial Reports, December 1977; Energy and Environmental Analysis, Inc.; Draft Report, "Preliminary Economic Assessment of Effluent Limitations in the Inorganic Chemical Industry," June, 1978 and "Economic Analysis of Proposed Revised Effluent Guidelines and Standards for the Inorganic Chemicals Industry," March, 1980.

NA = Not Available

TABLE 25-2. STATUS OF REGULATIONS - EFFLUENT LIMITATION GUIDELINES

SUBCATEGORY Sodium Hydrosulfite

SUBPART BE (40 CFR 415.570, 5/22/75)

		STANDARDS					
		BPCTCA		BATEA		NSPS	
Product Process	Parameters	Max.[1] kg/kkg (mg/l)	Avg.[2] kg/kkg (mg/l)	Max. kg/kkg (mg/l)	Avg. kg/kkg (mg/l)	Max. kg/kkg (mg/l)	Avg. kg/kkg (mg/l)
Sodium Hydro-Sulfite	Reserved	Reserved		Reserved		Reserved	

[1]Max. = Maximum of any one day.

[2]Avg. = Average of daily values for thirty consecutive days.

Sodium hydrosulfite then precipitates and forms a slurry in the reactor. The by-product, sodium sulfite, and sodium bicarbonate and carbon monoxide gas are formed.

There is a small amount of methyl formate produced in the reactor as a side reaction between the sodium formate and methanol:

$$HCO2Na + CH3OH = HCO2CH3 + NaOH \quad (2)$$

This side reaction product remains in the recycling methanol during the entire process. As a result, some of the methanol must be periodically purged from the recycle system to avoid excessive buildup of this impurity.

The resulting slurry of sodium hydrosulfite in the solution of methanol, methyl formate, and by-products is sent to a pressurized filter operation which recovers the crystals of sodium hydrosulfite. The crystals are dried in a steam heated rotary drier, recovered and packaged. The filtrate and backwash liquors from the filter operation are sent to the solvent recovery system as is the vaporized methanol from the drying operation. The drying of the sodium hydrosulfite filter cake must be done very carefully as it is heat sensitive and tends to decompose to sulfite.

A general process flow diagram for Plant #672 can be found in Figure 25-1, as is typical for this subcategory.

25.2 WATER USE AND WASTE SOURCE CHARACTERISTICS

25.2.1 Water Use

Water is used in the process as make up for the reaction solutions and for steam generation in the rotary dryers. Water is also used for noncontact cooling in the reactor gas vent scrubbers and dryers, as well as pump seals and washdowns, and as dilution water in the waste water treatment system to assist in biological oxidation of organic materials.

25.2.2 Waste Sources

A. The strongest process waste is the aqueous residue from the distillation column bottoms (solvent recovery system). This waste contains concentrated reaction by-products and is purged from the system at a rate of approximately 14,000 gallons per day. At Plant #672, this waste is sent to a by-product pond where it is held and either sold to the pulp and paper industry or bled into the treatment system.

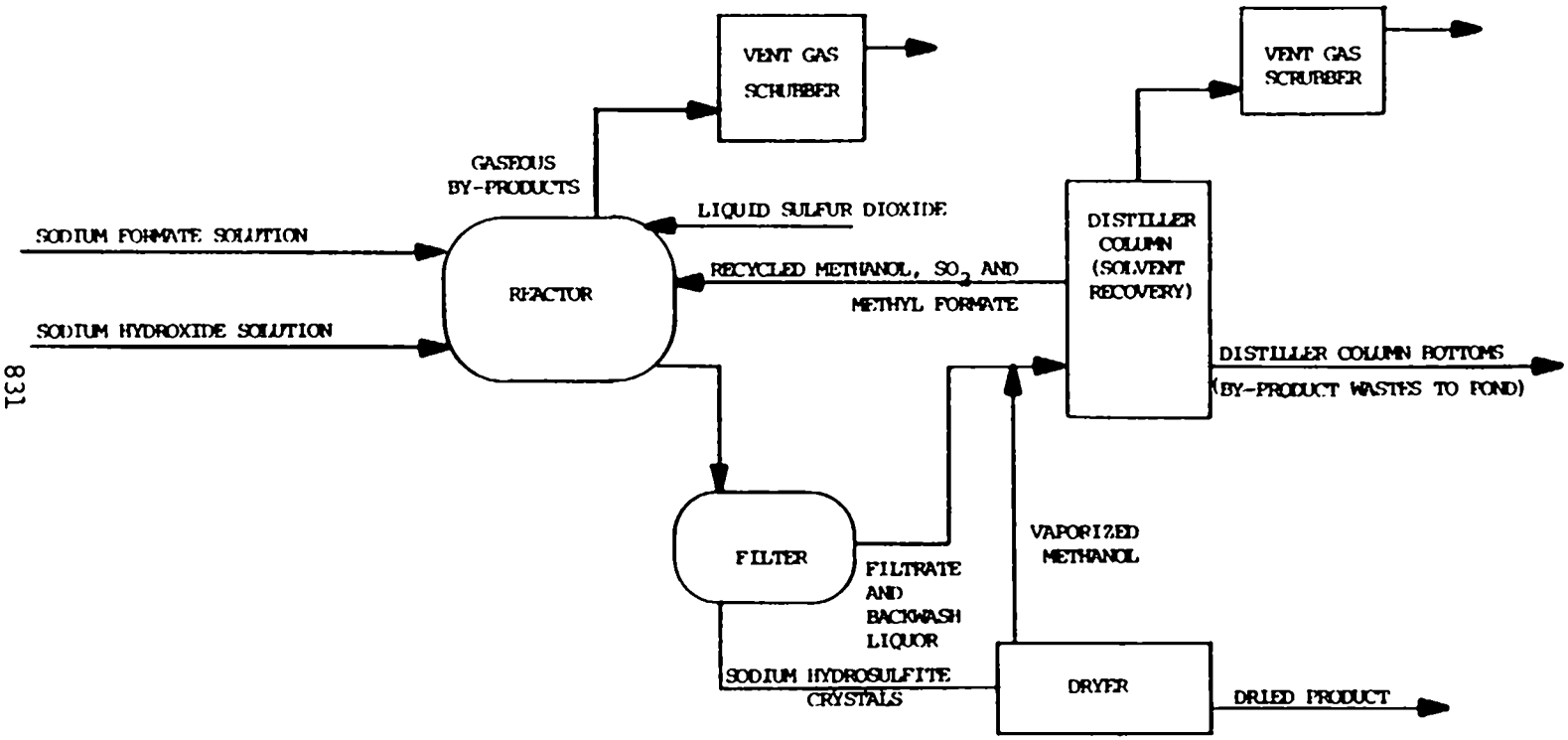

Figure 25-1. General process flow diagram at plant #672. (Sodium hydrosulfite manufacture.)

B. The dilute wastes from process are contributed by leaks, spills, washdowns, and tank car washing. At Plant #672, this is collected in a sump and then sent to the biological treatment system.

C. Cooling tower and boiler blowdown constitute a noncontaminated waste water souce. This is sent to the final compartment of the chlorine contact tank without treatment, for discharge with the combined effluent of the treatment plant.

D. The vent gas scrubbers create a waste water source which is sent to the methanol recovery stills for recycle. At Plant #672, this waste eventually goes to the by-product pond with the distillation column bottoms.

Table 25-3 presents the unit flows for the three primary sources of process waste water which contribute to the pollutant load.

E. Solid wastes currently are generated in the activated sludge waste treatment system. An estimated 2,400 gallons of biological sludge are discharged per day to an on-site drying bed. Application of more stringent waste treatment of toxic pollutants is estimated to generate an additional 6 kg/kkg of product of solid waste which must be disposed of at an approved site.

25.3 DESCRIPTION OF PLANTS VISITED AND SAMPLED

25.3.1 Screening and Verification

The only plant visited during the sampling program was Plant #672, where verification sampling procedures were used. Plant #672 is one of two plants that currently utilize the formate process in the sodium hydrosulfite subcategory. An evaluation of plants that currently utilize the zinc process for sodium hydrosulfite manufacture has been deferred to a later phase of regulation development by the Agency.

Data from Plant #672 can be considered representative of this process for both plants, since the other plant in this subcategory has an identical, though slightly smaller, production process. However, the second plant has a different waste treatment system. It also receives large loadings of waste from several other products. Because of this the plant is considered non-representative of the hydrosulfite process and visits were limited to Plant #672 for this reason.

TABLE 25-3. WASTE SOURCE DATA AT PLANT #672

WASTE SOURCE	FLOW (m^3/kkg)
Dilute Waste (spills, etc.)	1.95
Dilution Water (contact)	1.75
By-product Waste	0.95
Total	4.65

(Basis of flow for model plant and regulation development)

A general flow diagram of Plant #672 showing process waste sources and sampling points is shown in Figure 25-2. The sources of waste water for each sampling point are as follows:

1. By-product pond.

2. Dilute waste from sodium hydrosulfite process area and sumps.

3. Combined influent to treatment. This point collects waste from points 1 and 2, plus the sodium bisulfite waste stream.

4. Treated effluent at the outfall.

At the time screening sampling was conducted at Plant #672, none of the by-product waste water was being sent to the biological treatment system. As a result, the sodium hydrosulfite process waste being treated was from the dilute waste area only.

Table 25-4 presents the results of the conventional and nonconventional pollutant concentrations and unit loads for each of the streams sampled. The results are based on three 24-hour composite samples. It should be noted that sampling was done during a time when no by-product waste was entering streams 3 and 4. The unit flow indicated is the estimated flow observed during sampling.

25.3.2 Toxic Pollutant Concentrations

Toxic pollutants were identified in the raw process waste stream at Plant #672. The following toxic pollutants were found at detectable concentration levels.

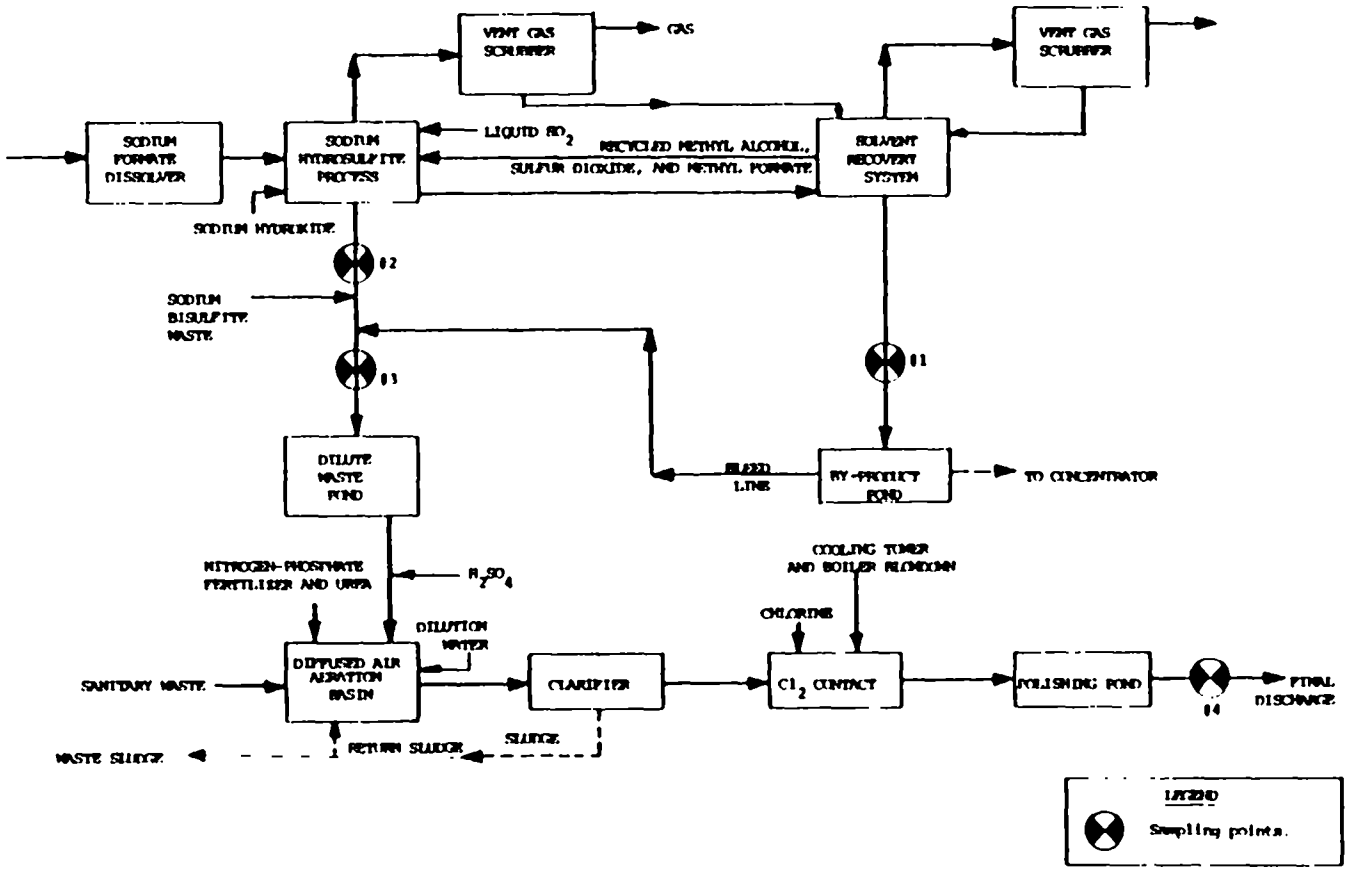

Figure 25-2. General process flow diagram at plant #672 showing the sampling points. (Sodium hydrosulfite manufacture.)

TABLE 25-4. FLOW, POLLUTANT CONCENTRATION, AND LOAD DATA OF THE SAMPLED WASTE STREAMS FOR PLANT #672 PRODUCING SODIUM HYDROSULFITE

Stream Designation	Description	Flow (m^3/kkg)	TSS (mg/l)	TSS (kg/kkg)	COD (mg/l)	COD (kg/kkg)
1	By-product	0.95	61	0.058	78,000	74
2	Dilute Waste	1.95	260	0.51	15,000	29
3	Dilute Waste and SBS Waste	2.05	840	1.7	16,000(1)	32
4	Final Discharge	4.87	25	0.12	740(1)	3.6

(1) Value is that observed during sampling which may differ significantly if the by-product stream is contributing.

Maximum Raw Waste Concentrations Observed
(µg/l)

Pollutant	Verification Plant #672
Arsenic	79
Cadmium	43
Chromium	9300
Copper	1500
Lead	1300
Nickel	1700
Silver	130
Zinc	27000
Pentachlorophenol	580
Phenol	170
Cyanide	100
Mercury	28
Selenium	34

Two toxic organic pollutants, pentachlorophenol and phenol, were identified at low, but detectable, concentration levels. The raw process materials, including sodium formate and methanol, are likely sources. The sodium formate currently used in the process is a by-product from an unrelated organic chemicals process which may contain the organic impurities. Methanol is also a suspect source of organic impurities in view of the difficulty involved with its purification and high degree of solubility with pentachlorophenol. Also possible is coincidental formation of pentachlorophenol in the process due to the presence of specific chlorinated hydrocarbons under conditions conducive to its development.

Section 5.1.2 of this report describes the methodology of the screening and verification sampling program. In the sodium hydrosulfite industry, a total of 3 days of sampling were conducted at Plant #672. Three 24-hour composite samples were taken at four different sampling points. The sampling involved 169 analytical data points for the toxic inorganic pollutants and 387 additional points for the toxic organic pollutants. The daily raw waste loads were calculated from the waste stream flow rates measured or estimated at the time of sampling and the measured pollutant concentration.

That is,

$$\text{Daily loading (as kg of pollutant per day)} = \frac{(C)(Q)}{1000}$$

Where:

C is the concentration of the pollutant expressed in units of mg/l (Note: kg/m3 = 1000 mg/l), and

Q is the waste stream flow rate expressed in units of m3/day. (m3, a cubic meter, is equal to 264.2 U.S. gallons.)

Similarly, the unit loadings were calculated from the reported sodium hydrosulfite production rate, the waste stream flow rate, and the measured pollutant concentration.

$$\text{Unit loading (as kg of pollutant per kkg of sodium hydrosulfite)} = \frac{(C)(Q)}{1000P}$$

Where C and Q are the same as described above, and P is the sodium hydrosulfite production rate expressed in units of kkg/day. (kkg is 1000 kg, a metric ton, which is equal to 2205 lbs.)

Table 25-5 presents the average toxic pollutant concentrations observed during sampling for the raw and treated waste waters at Plant #672. The concentration indicated is based on three 24-hour composite samples. Table 25-6 is a tabulation of the unit loadings for each of the toxic pollutants found at detectable levels in the raw waste water.

The estimated total toxic pollutant raw waste loads generated each year for this subcategory were based on the total estimated annual production of sodium hydrosulfite. The loads are as follows:

Pollutant	Waste Load (kg/year)
Arsenic	4.8
Cadmium	1.3
Chromium	22
Copper	7.6
Lead	40
Nickel	64
Silver	6.4
Zinc	960
Pentachlorophenol	33
Phenol	6.0
Cyanide	1.56
Mercury	0.80
Selenium	1.2

TABLE 25-5. SAMPLING RESULTS AND TREATMENT SYSTEM PERFORMANCE FOR TOXIC POLLUTANTS PLANT #672

Pollutant	WASTE STREAM Raw Waste Influent (1) (mg/l)	Treated Effluent (2) (mg/l)
Toxic Pollutants (3)		
Arsenic	0.030	ND
Cadmium	0.036	0.025
Chromium	7.4	0.035
Copper	1.0	ND
Lead	0.38	0.065
Nickel	1.4	0.16
Silver	0.043	0.034
Zinc	5.9	0.034
Mercury	0.0030	0.0020
Pentachlorophenol	0.37	ND
Phenol	0.16	ND
Cyanide	ND	0.10

(1) Raw waste pollutant concentration observed during sampling at sample point #3. Figure 25-2.
(2) Effluent pollutant concentration observed in treated discharge at sample point #4.
(3) Data is based on average of three 24-hour composite samples. Selenium is not included since it was not detected in the raw waste influent at the time of sampling.

TABLE 25-6. SUMMARY OF RAW WASTE LOADINGS AND CONCENTRATION FOUND AT A SODIUM HYDROSULFITE PLANT (FORMATE PROCESS)

Pollutant[4]	Combined Dilute and Coproduct Waste Stream[1]			By-product Waste Stream[3]
	(kg/day)	(kg/tkg)	(mg/l)[2]	(mg/l)
Priority				
Arsenic	0.0067	0.00012	0.041	0.077
Cadmium	0.0019	0.000033	0.011	0.013
Chromium	0.031	0.00056	0.19	0.10
Copper	0.011	0.00019	0.066	0.047
Lead	0.056	0.0010	0.35	0.86
Nickel	0.090	0.0016	0.55	1.1
Silver	0.0090	0.00016	0.055	0.12
Zinc	1.4	0.024	8.3	24
Mercury	0.011	0.000020	0.0069	0.0
Pentachlorophenol	0.047	0.00083	0.29	0.0
Phenol	0.0084	0.00015	0.052	0.050
Selenium	0.0017	0.000030	0.01	0.032
Conventional And Nonconventional				
Total Suspended Solids	33	0.57	NA	NA
Chemical Oxygen Demand	5700	102	NA	NA
Cyanide	0.0022	0.000039	0.013	0.0

NA = Not Applicable

(1) Loadings are based on sampling data at streams #1 and #2, Figure 25-2.
(2) Concentrations are based on above loadings (L) in kg/tkg and an observed unit flow (Q) of 2.90 m^3/tkg (Table 25-4) for combined streams #1 and #2, i.e.,

$$(mg/l) = \frac{L\ kg/tkg}{Q\ m^3/tkg}\left(\frac{1000\ mg/l}{kg/m^3}\right)$$

(3) Sampling data for the by-product waste stream. Average of three 24-hour composite samples.
(4) Data is based on average of three 24-hour composite samples.

25.4 POLLUTION ABATEMENT OPTIONS

25.4.1 Toxic Pollutants of Concern

Although sodium hydrosulfite is being manufactured by both the zinc process and the formate process, the trend is away from the zinc process for environmental reasons. This discussion concerns only the formate process, using a sodium formate feed stock from a source which appears to contain heavy metal impurities (chromium, zinc, nickel, lead, and copper) as well as trace amounts of cyanide. A predominant characteristic of sodium hydrosulfite wastes is their high chemical oxygen demand resulting from various forms of sulfite, from methyl formate and from residual methanol after a solvent recovery process. Low levels of phenolic compounds are also found in the raw wastes.

25.4.2 Prevailing Control and Treatment Practices

Due to the nature of the two primary raw waste streams, each one is handled differently. The dilute waste is first sent to a holding pond where the flow is equalized and the waste mechanically aerated. This pond also contains approximately 1500 gallons per day of waste from a sodium bisulfite process. The pond effluent is pH adjusted with sulfuric acid and sent to an aeration basin. A nitrogen-phosphate fertilizer and urea are added to provide nutrients. Approximately 3500 gallons per day of sanitary waste and up to 25,900 gallons per day of clean dilution water are also added to the aeration basin. This basin formerly had mechanical aerators, but now has air diffusers which allow better temperature control for biological oxidation. The effluent from aeration goes to a clarifier. Approximately 14,000 gallons per day of settled sludge is returned to the aeration basin and 2,400 gallons per day is sent to drying piles on site. More dilution water is added to the clarifier when needed for Total Dissolved Solids control. The overflow from the clarifier goes to a chlorine contact tank because of the sanitary waste. The blowdown water from the cooling tower and boilers is added to the final chamber of the chlorine contact tank. The effluent from this unit is sent to a final polishing pond for settling and equalization before discharge.

The by-product waste from the distillation column bottoms is sent to a lined by-product pond at a rate of 14,000 gallons per day and held for one of two possible disposal methods. When there is a market for the by-products, the waste is concentrated and sold to the pulp and paper industry. At times when this is not possible, and the pond nears capacity, the waste is bled into the treatment system described above through the dilute waste holding pond.

25.4.3 Advanced Treatment Technologies

Practical technologies for controlling COD include various forms of mechanical and biological oxidation. For the relatively simple chemical oxidation of hydrosulfite to sulfate, intimate contact with atmospheric oxygen is effective, using submerged air diffusers, induced air in a circulating system or mechanical surface aeration. For biochemical oxidation of resistant organics such as formates, phenols, chlorinated hydrocarbons, and methanol, trickling filtration, rotating biological discs or variations of the activated sludge process can provide intimate contact between organic pollutants and the microbiological organisms which use them as food.

Technologies for controlling heavy metals include alkaline precipitation, which is effective for the common heavy metals, and sulfide treatment, which precipitates nickel, zinc, and copper, but does not increase control of chromium. Other less appropriate metal removal techniques have been discussed in Section 8.

25.5 SELECTION OF APPROPRIATE TECHNOLOGY AND EQUIPMENT

25.5.1 Technologies for Different Treatment Levels

A. Level 1 (BPT) - Treatment system pH adjustment, biological oxidation, settling and chlorination are used to reduce COD and coliform organisms in the combined wastes, in accordance with existing plant practice. The flow diagram is shown in Figure 25-3.

B. Level 2 (BAT) - The by-product wastes are subjected individually to alkaline precipitation, to remove the toxic heavy metals and reduce arsenic, and then are combined with the product wastes for biological oxidation treatment and chlorination, as in Level 1.

If an actual formate process plant employs metal-free sodium formate in its process there is no reason to expect heavy metals in the process wastes and Level 2 treatment should not be necessary. The flow diagram is shown in Figure 25-4.

25.5.2 Equipment for Different Treatment Levels

Equipment functions - Product waste and by-product wastes are received in a mixed and aerated equalizing basin, adjusted to a neutral pH and aerated in a four day aerated lagoon, including 50 percent return of underflow to the influent. Plant sewage, nutrients and diluting water are added to the lagoon to

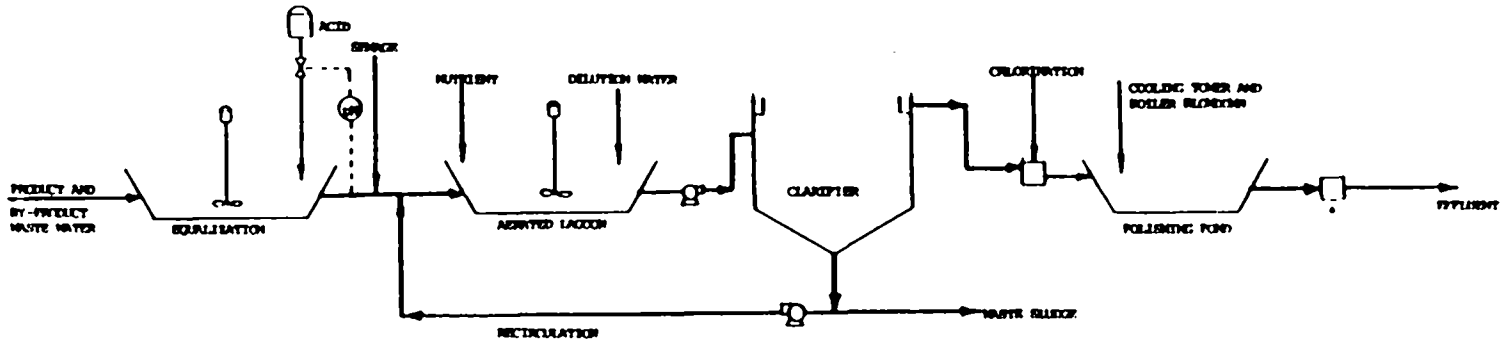

* Includes flow monitoring, pH monitoring and sampler.

Figure 25-3. Level 1 waste water treatment for sodium hydrosulfite subcategory.

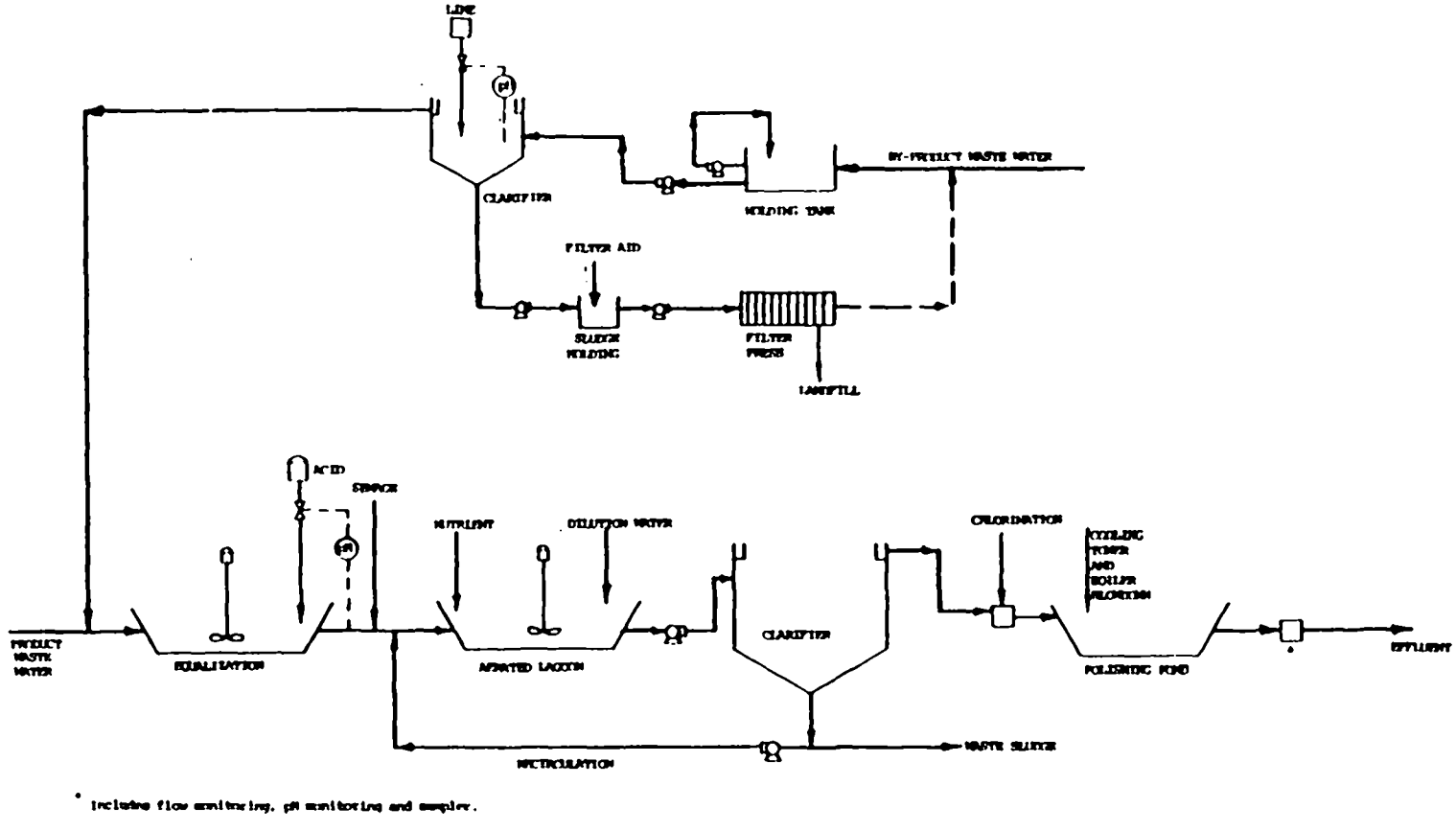

* Includes flow monitoring, pH monitoring and sampler.

Figure 25-4. Level 2 waste water treatment for sodium hydrosulfite subcategory.

promote biological oxidation of COD and organics. Lagoon effluent is clarified, chlorinated and sent to a polishing pond before discharge through effluent monitoring facilities. Cooling tower and boiler blowdown wastes enter the system after chlorination, since they require no treatment except settling of scale and inert debris in the polishing pond. Floating aerators are used in the equalization basin and compressed air is diffused in the aerated lagoon, for mixing and introduction of dissolved oxygen into the mixed liquor.

In Level 2 treatment, by-product wastes are received in a separate 18-hour aerated and recirculated holding tank, which is pumped at average daily flow to a gravity clarifier, adding sufficient lime to reach a pH of 10.5. The clarifier overflow joins the product waste stream in the equalization basin of the BPT system. All features of the BPT system remain the same, since it was originally sized to handle the combined wastes.

Chemicals and handling - Sulfuric acid, lime, filter aid and chlorine are chemicals commonly used in waste treatment. When handled in corrosion resistant equipment designed for their use, no unusual hazards are expected. Raw sewage and 10-10-10 liquid fertilizer introduced into the aerated lagoon become thoroughly mixed and are eventually consumed in the biological oxidation process, constituting no threat to operating personnel. Chlorine, used for control of coliform bacteria, is received in ton containers and applied as a chlorine water solution using standard solution feed chlorination equipment. There are no unusual chemical handling problems in treating these wastes, provided the waste streams are kept at a neutral or alkaline pH.

Separation and disposal of solids - In the BPT system, waste activated sludge solids are assumed to be dried in sludge beds at the site, to be used as fertilizer for plant landscaping. Clarifier underflow from alkaline precipitation of by-product waste in Level 2 is assumed to be sent to a sludge holding tank and dewatered at suitable intervals in a filter press, followed by hauling of solids to a chemical landfill. Filter press filtrate is returned to the holding tank for retreatment.

Monitoring requirements - Internal monitoring should include simple field tests for pH, chlorine residual and settleable solids. Maintenance of the by-product stream clarifier at a pH of 10.5 is expected to provide control of heavy metals without need for routine metal analyses, but effluent samples should be analyzed for chromium, zinc, copper, nickel and lead by atomic absorption for official reporting

purposes, in addition to periodic COD tests for general evaluation of the treatment.

25.6 TREATMENT COST ESTIMATES

25.6.1 General Discussion

A model plant concept was prepared for the purpose of the cost estimates. The specifications of the waste input parameters and the design of the model plant BPT level treatment system are based on the foregoing information presented for Plant #672.

In this subcategory, commercial fertilizer and urea are added to stimulate growth of the biomass employed in biological treatment, and not for direct reaction with a residual pollutant. Therefore, the chemicals used do not bear a fixed relationship to the plant production in units of sodium hydrosulfite.

Organic solids generated in the model treatment system are assumed to be disposed of on land at the site, without a separate cost for sludge disposal.

25.6.2 Cost Estimates

The cost estimate of one model plant having two levels of treatment and the same level of production at both the levels is presented in Table 25-7. Table 25-8 gives a summary of the unit cost distribution between amortization, operation and maintenance cost components at two levels of treatment.

Cost estimates developed for the first and the second levels of treatment indicate that labor and supervision costs constitute a major portion of the annual cost. This reflects the manpower requirements for operating the treatment systems on a 24-hour basis.

25.7 BASIS FOR REGULATIONS

25.7.1 Evaluation of BPT Treatment Practices

There are two plants producing sodium hydrosulfite by the formate process, both of which have BPT equipment in place and

TABLE 25-7. MODEL PLANT TREATMENT COSTS

Subcategory SODIUM HYDROSULFITE Formate Process

Production	20,450 metric tons per year[1]	(22,546 tons per year)[1]
	58 metric tons per day	(64 tons per day)
Waste water flow	273 cubic meters per day.	

	LEVEL OF TREATMENT (2)	
	FIRST	SECOND
A. INVESTMENT COST		
Construction	$51,000	$11,500
Equipment in place, including piping, fittings, electrical work and controls.....	113,000	110,200
Monitoring equipment in place.....	9,000	
Engineering design and inspection.....	34,600	24,340
Incidentals, overhead, fees, contingencies...	34,600	24,340
Land.....	12,000	2,400
TOTAL INVESTMENT COST	$254,200	$172,780
B. OPERATION AND MAINTENANCE COST		
Labor and supervision.	$168,000	$84,000
Energy.....	12,000	1,200
Chemicals.....	3,500	18,500
Maintenance.....	24,220	17,038
Taxes and insurance...	7,626	5,183
Residual waste disposal.....		2,500
Monitoring, analysis and reporting.....	15,000	7,500
TOTAL OPERATION AND MAINTENANCE COST	$230,346	$135,921
C. AMORTIZATION OF INVESTMENT COST	$39,405	$27,720
TOTAL ANNUAL COST	$269,751	$163,641

(1) Based on 350-day year.
(2) First level represents the base cost of treatment system. Other levels represent the incremental cost above base cost.

TABLE 25-8. MODEL PLANT TREATMENT COSTS

Subcategory SODIUM HYDROSULFITE Formate Process

COST ITEM	PRODUCTION (kkg/yr)	FLOW (m3/day)	Annual Treatment Costs ($/kkg) LEVEL OF TREATMENT FIRST	SECOND	THIRD	FOURTH
Annual Operation and Maintenance	20,450	273	11.26	6.65	Not Applicable	
Annual Amortization	20,450	273	1.93	1.36		
Total Cost	20,450	273	13.19	8.00		

are meeting BPT limitations. EPA, therefore, predicts no impacts in this subcategory as a result of the BPT regulations.

BPT technology has been specified as the technology presently in use at Plant #672. Design and cost estimates are based on inclusion of by-product wastes.

An evaluation of BPT treatment practices was performed at Plant #672 based on the pollutant sampling, since long-term monitoring data was not available for the pollutants of concern. Details concerning the performance evaluation calculations and assumptions are discussed subsequently for the pollutants of concern.

Conventional and Nonconventional Pollutants

Chemical Oxygen Demand (COD) - At the time of sampling, the by-product waste (stream #1, Figure 25-2) was not flowing into the waste water treatment system (Stream #3, Figure 25-2).

Review of Table 25-4 indicates that a majority of the COD load is contributed by the by-product waste stream. The other major source of COD is contributed by the dilute waste stream #2. Estimates of subcategory performance are made for COD based on the following assumptions:

Assumption 1: The COD load for the by-product stream must be included in the evaluation of the treatment system performance, since its contribution to the final COD load will have a significant influence. Therefore, it is assumed that the percent COD removed in the treatment system during sampling for the dilute waste stream would be the same percent COD removed for the by-product waste stream as if it had received treatment.

Assumption 2: In order to estimate the COD removed during treatment in the dilute waste stream, two minor assumptions must also be made to account for COD contributions from the sodium bisulfite (SBS) and sanitary waste streams which are not considered sodium hydrosulfite process-related. It is assumed that the final COD concentration for the treated sodium bisulfite waste stream is 680 mg/l (from Table 24-16) and 60 mg/l which is a conservative estimate for treated sanitary wastes. These assumptions are not critical since the total combined waste flow from these two waste sources is only 0.3 m3/kkg compared with 2.9 m3/kkg of other process related wastes.

Table 25-9 is a summary of the subcategory performance evaluation of TSS and COD for Plant #672. The COD evaluation is developed in the table on the bases of the assumptions above and sampling information in Table 25-4.

TABLE 25-9. SUBCATEGORY PERFORMANCE EVALUATION SUMMARY AT PLANT #672 FOR CONVENTIONAL AND NONCONVENTIONAL POLLUTANTS IN THE EFFLUENTS

Effluent Waste Description	Flow (m^3/kkg)	TSS[2] (mg/l)	TSS[2] (kg/kkg)	COD[2] (mg/l)	COD[2] (kg/kkg)
A - Dilute Waste	1.95	260	0.51	1800	3.5
B - Sodium Bisulfite Waste	0.10	NA[1]	NA	680[3]	0.068
C - Sanitary Waste	0.24	NA	NA	60[3]	0.014
D - Dilution Water	1.75	NA	NA	0	0
E - Boiler Blowdown	0.83	NA	NA	0	0
F - By-product	0.95	61	0.058	9600	9.2
Total Load (A+D+F)		NA	NA	NA	13
Effluent Concentration	4.87	25	NA	NA	NA
Model Plant Flow (A+D+F)	4.65	NA	NA	NA	NA
Concentration At Model Plant Flow	4.65	26	NA	2700	NA
BASIS OF LIMITATION	4.65	25	NA	NA	12

(1) - NA Not applicable to evaluation.

(2) - Data based on average of three 24-hour composite samples.

(3) - Assumed value discussed in Section 25.7.1 under Chemical Oxygen Demand.

include pentachlorophenol, phenol, and other trace organics. The presence of these toxic pollutants is currently under investigation to: 1) determine the source of the pollutants and identify whether they are process related, and 2) determine whether process modifications or best management practices might be available to eliminate their presence if they are discovered to be process related.

Basis of Pollutant Limitations

Conventional and nonconventional parameters -

A. pH: The treated effluent is to be controlled within the range of 6.0 to 9.0. This limitation is based on the data presented in Appendix B of this report and the JRB Study (52).

B. TSS and COD: The data presented in Table 25-9 was used for the development of TSS and COD limitations. The data presented is for Plant #672 which is the only plant in the subcategory where the treatment performance can be observed clearly.

No long-term monitoring data is currently available to statistically estimate the variability factor ratio (VFR) in the Sodium Hydrosulfite Subcategory. Therefore, the VFR is based on an average value of 3.6 observed in the Titanium Dioxide Subcategory for the same conventional and nonconventional pollutants found in the Sodium Hydrosulfite Subcategory. A relatively high VFR is anticipated due to the potential of a wide variation in influent waste water characteristics which is consistent with the value selected.

The proposed maximum 30-day average COD limitation is estimated at 12 kg/kkg from Table 25-9 which is based on three 24-hour composite samples. Therefore, the corresponding 24-hour maximum limitation may be determined from the following general formula:

(30-day average concentration or load)(VFR) = 24-hour maximum concentration or load

Consequently, for COD:

(12 kg/kkg)(3.6) = 43 kg/kkg

presented in Table 25-10 as the proposed 24-hour maximum limitation.

The proposed maximum 30-day average total suspended solids (TSS) load limitation is determined based on 25 mg/l observed during sampling, in Table 25-9, and is determined as follows:

A determination of acheivable effluent COD load is shown in the following steps beginning with an estimation of the COD removal efficiency in the waste treatment system.

The observed effluent COD load is 3.6 kg/kkg from Table 25-4 which includes contributions from the sodium bisulfite (SBS) and sanitary waste streams which are not process related. These loads are determined as follows:

$$\text{SBS load} = (680\ \text{mg/l})(0.10\ \text{m3/kkg})\left(\frac{\text{kg/m3}}{1000\ \text{mg/l}}\right) = 0.068\ \text{kg/kkg}$$

(0.10 m3/kkg from Table 25-9; 680 mg/l from Assumption 2 above)

$$\text{Sanitary waste COD load} = (60\ \text{mg/l})(0.24\ \text{m3/kkg})\left(\frac{\text{kg/m3}}{1000\ \text{mg/l}}\right)$$

$$= 0.014\ \text{kg/kkg}$$

(0.24 m3/kkg from Table 25-9; 60 mg/l from Assumption 2 above)

The effluent COD load contributed by the SBS and sanitary waste streams are subtracted from the observed load of 3.6 kg/kkg to obtain the actual COD load contributed by the process related dilute waste as follows:

$$3.6\ \text{kg/kkg} - (0.068\ \text{kg/kkg} + 0.014\ \text{kg/kkg}) = 3.5\ \text{kg/kkg}$$

The effluent COD load is 3.5 kg/kkg which when expressed as a ratio with the raw COD waste load (Assumption 1) can be used to estimate the additional COD contributed by the by-product waste as follows:

Raw COD load contributed by dilute waste = 29 kg/kkg from Table 25-4

Raw COD load contributed by by-product waste = 74 kg/kkg from Table 25-4

Effluent COD load of by-product waste = $74\ \text{kg/kkg}\left(\frac{3.5\ \text{kg/kkg}}{29\ \text{kg/kkg}}\right) = 8.9\ \text{kg/kkg}$

Total effluent COD load contributed by both the dilute and by-product waste =

$$3.5\ \text{kg/kkg} + 8.9\ \text{kg/kkg} = 12\ \text{kg/kkg}$$

The effluent load for COD is 12 kg/kkg based on the plant performance evaluation and sampling data.

Total Suspended Solids (TSS) - The removal of TSS from the raw waste water is much more complex on a load basis. TSS removal must therefore be estimated on a concentration basis as indicated in Table 25-9. A TSS concentration of 25 mg/l was observed in the treated effluent during sampling (Table 25-4) which is used for the purpose of regulation.

Toxic Pollutants

The removal of toxic pollutants in the treatment system at Plant #672 during sampling is indicated in Table 25-5 for the purpose of evaluating plant performance.

25.7.2 Basis for Proposed BPT Effluent Limitations

Technology Basis

The Agency is proposing BPT limitations for which the technology basis is, or is equivalent to, equalization, pH adjustment, aeration in a biological oxidation system, clarification, and chlorination before discharge of the treated effluent.

Flow Basis

The basis of flow used for the cost estimates, and as a basis to estimate pollutant discharge loadings for the purpose of regulation development, was derived from plant information received for Plant #672. Table 25-3 presents the unit flows from the three primary waste sources identified in the industry. The dilute and by-product waste waters are primarily process related; whereas, the dilution water is required for proper operation of the biological waste treatment system.

There are only two plants which currently use the formate process for the manufacture of sodium hydrosulfite. The model plant flow is 4.7 m3/kkg of product for the sodium hydrosulfite subcategory as presented in Table 25-3 and is based on Plant #672 data. Plant #672 data was chosen for evaluation because it is not complicated by other unrelated manufacturing processes.

Selection of Pollutants to be Regulated

The proposed BPT treatment technology is directed primarily toward removal of TSS and COD. In addition to these conventional and nonconventional pollutants, toxic organic pollutants were identified. These toxic organic pollutants

TABLE 25-10. PROPOSED LIMITATIONS

SODIUM HYDROSULFITE

Best Practicable Control Technology Currently Available

Waste Water Flow: 4.7 m^3/kkg

Pollutant	Subcategory Performance (mg/l)	VFR[1]	Concentration Basis (mg/l)		Effluent Limit (kg/kkg)	
			Max 30-day Avg	24-hr Max	Max 30-day Avg	24-hr Max
Conventional And Nonconventional Pollutants:						
Total Suspended Solids, TSS	25[2]	3.6	25	90	0.12	0.43
Chemical Oxygen Demand, COD	2600	3.6	2600	9400	12	43

(1) - VFR: ratio of the 24-hour variability factor to the 30-day variability factor.

(2) - Based on subcategory performance estimates utilizing three 24-hour composite samples.

$$(25\ mg/l)(4.7\ m3/kkg)\left(\frac{kg/m3}{1000\ mg/l}\right) = 0.12\ kg/kkg$$

The 24-hour maximum then becomes,

$$(0.12\ kg/kkg)(3.6) = 0.43\ kg/kkg.$$

The proposed regulations are presented in Table 25-10.

Toxic organic pollutants - The 30-day average concentration of the toxic organic pollutants was estimated based on two sources including 1) verification sampling data, and 2) literature based treatability estimates.

The verification sampling results presented in Table 25-5 for pentachlorophenol and phenol indicate that both of these toxic organic pollutants are currently removed to the analytical detection limit and are therefore excluded from further consideration.

Toxic metal pollutants - The BPT treatment technology is not amenable to the removal of toxic metal pollutants. Therefore, toxic metals are excluded in the limitations, since the technology can not reasonably ensure their removal on a consistent basis.

25.7.3 Basis for Proposed BCT Effluent Limitations

The BCT limitation (applicable only to TSS) was set equal to BPT because BAt treatment does not remove additional conventional pollutants.

25.7.4 Basis for Proposed BAT Effluent Limitations

The Application of Advanced Level Treatment

The Agency has analyzed the cost effectiveness of the base level systems (BPT) and the various advanced level options for the removal of pollutants based on cost estimates presented in this report. For BAT, the Agency is proposing Level 2 treatment. No plant has this additional technology installed which would ensure removal of an additional 265 pounds per year of toxic metals.

Technology Basis

The Agency is proposing BAT treatment that provides more stringent removal of toxic pollutants in the by-product waste stream by introducing alkaline precipitation with lime and settling prior to base level treatment (BPT). The by-product

waste stream was the primary source of toxic metal pollutants observed during sampling.

Flow Basis

The unit flow used for the proposed limitations is based on 4.7 m3/kkg of product. The estimated flow does not change for BPT and BAT treatment (see Section 25.7.2).

Selection of Pollutants to be Regulated

The selection of pollutants for which specific numerical effluent limitations are proposed was based on an evaluation of raw waste sampling data from Plant f672.

Results of the sampling are tabulated in Section 25.3.2 for the raw process waste streams. The pollutant concentration listed under verification is the highest value observed during sampling at the plant visited. Toxic pollutants are listed based on their presence, during sampling, at significant concentration levels. Pollutants from this list were considered candidates for regulation if their concentration appeared at least once at approximately the lowest level estimated as treatable using any available technology appropriate for their removal.

The relative significance of the candidate pollutants was estimated from the total annual raw waste load for each pollutant which appears in a table in Section 25.3.2. The total annual load is based on the average concentration observed during verification sampling which is tabulated in Table 25-6 in addition to the estimated annual production of 39,940 kkg of product for the industry.

Specific numerical effluent loading limitations were proposed only for those candidate pollutants which appeared at average concentration levels (Table 25-6) also considered to be treatable.

On the basis of concentration and total annual raw waste loads, zinc, nickel, lead, chromium, and copper have been identified at significant levels in the raw waste stream and are also candidates for regulation. These toxic pollutants are listed in order of their relative significance with regard to pollution potential. The pollutants arsenic, cadmium, silver, cyanide, mercury, and selenium were not regulated because they either did not appear during sampling or were observed at concentration levels not considered treatable.

Basis of Pollutant Limitations

Nonconventional pollutants - The only nonconventional pollutant selected for the proposed limitations is COD. In view of the proposed technology for BAT, no additional removal of COD is anticipated beyond what is already estimated for BPT. Section 25.7.2 discusses the development of the proposed COD limitation.

The proposed maximum 30-day average COD load limitation is 12 kg/kkg and the 24-hour maximum is 43 kg/kkg presented in Table 25-11.

Toxic pollutants - Alkaline precipitation and settling of the by-product waste is expected to remove the five candidate toxic metal pollutants to within the limits of treatability. Review of Table 25-5 indicates that the existing BPT treatment system is providing incidental removal of the toxic metals. The sampling data for the treated waste effluent in the table is used as guidance in the development of the proposed limitations. Table 8-11 presents the limits achievable for the toxic metal pollutants based on literature treatability which was used for the purpose of establishing the limitations.

No long-term pollutant monitoring data is available on which to base the variability factor ratio (VFR). Therefore, the VFR has been selected from the Titanium Dioxide Subcategory which exhibits similar toxic pollutant characteristics and a complete VFR evaluation based on long term data. Selection of the VFR is based on the similar toxic pollutants and treatment technology applied.

The variability factor ratio (VFR) was estimated for the toxic pollutants in a similar manner as previously discussed for TSS and COD. The VFR is estimated from the Titanium Dioxide Subcategory long-term monitoring data for zinc since this control parameter is of greatest concern. The data in Tables A-9a-1 and A-9c-1 indicate a VFR of 2.1 which is used for the purpose of regulation development for the toxic pollutants.

Treatability studies are currently underway by the EPA to determine the removal of pollutants in BAT treatment. The results of the studies will be available during public comment period.

A. Zinc: Review of the zinc concentration in the raw by-product waste stream indicates levels as high as 27 mg/l and an average of 24 mg/l from three 24-hour composite samples (Table 25-6). Literature treatability presented in Table 8-11

TABLE 25-11. PROPOSED LIMITATIONS

SODIUM HYDROSULFITE

Best Available Technology

Waste Water Flow: 4.7 m^3/kkg

Pollutant	Performance (mg/l)	VFR[1]	Concentration Basis (mg/l)		Effluent Limit (kg/kkg)	
			Max 30-day Avg	24-hr Max	Max 30-day Avg	24-hr Max
Conventional And Nonconventional Pollutants:						
Chemical Oxygen Demand, COD[6]	2600[2]	3.6[5]	2600	9400	12	43
Toxic Pollutants:						
Zinc[6]	0.50[3]	2.1[5]	0.50	1.05	0.0024	0.0050
Nickel[6]	0.20[3]	2.1[5]	0.20	0.42	0.00094	0.0020
Lead[6]	0.30[3]	2.1[5]	0.30	0.63	0.0014	0.0029
Chromium[6]	0.10[3]	2.1[5]	0.10	0.21	0.00047	0.00099
Copper[6]	0.50[3]	2.1[5]	0.50	1.05	___[4]	___[4]

(1) - VFR: ratio of the 24-hour variability factor to the 30-day variability factor.

(2) - Based on subcategory performance estimates utilizing three 24-hour composite samples.

(3) - The lower limit of the literature treatability estimate is used as the basis for the 30-day average limitation when the observed average of the sampling data are below this level.

(4) - No effluent limitation proposed at this time.

(5) - Based on Titanium Dioxide Subcategory long-term monitoring data for similar toxic pollutants.

(6) - Also applicable for pretreatment standards for existing sources PSES limitations, which are expressed as concentrations only.

indicates an achievable concentration of 0.50 mg/l for alkaline precipitation and settling. The proposed maximum 30-day limitation is developed as follows:

$$(0.50\ mg/l)(4.7\ m3/kkg)\left(\frac{kg/m3}{1000\ mg/l}\right) = 0.0024\ kg/kkg$$

The 24-hour maximum limitation is developed by the following relationship:

24-hour maximum loading or concentration = (VFR)(30-day average loading or concentration)

The VFR selected for the purpose of the limitations is 2.1 from the data developed in the Titanium Dioxide Subcategory (Tables A-9a-1 and A-9c-1). Therefore, the proposed daily or 24-hour maximum is:

$$(2.1)(0.0024\ kg/kkg) = 0.0050\ kg/kkg$$

The limitations are presented in Table 25-11.

B. Nickel: The concentration of nickel was observed as high as 1.7 mg/l in the raw by-product waste stream and averaged 1.1 mg/l in the three 24-hour composite samples (Table 25-6). Literature treatability presented in Table 8-11 indicates an estimated achievable concentration of 0.2 mg/l which is used for the proposed maximum 30-day average concentration. The 30-day limitation becomes:

$$(0.2\ mg/l)(4.7\ m3/kkg)\left(\frac{kg/m3}{1000\ mg/l}\right) = 0.00094\ kg/kkg$$

The 24-hour maximum is then:

$$(2.1)(0.00094\ kg/kkg) = 0.0020\ kg/kkg$$

C. Lead: The concentration of lead was observed as high as 1.3 mg/l in the raw by-product waste stream and averaged 0.86 mg/l in the three 24-hour composite samples. Literature treatability presented in Table 8-11 indicates an achievable concentration of 0.30 mg/l for alkaline prcipitation and settling. Therefore, the proposed maximum 30-day average limitation is:

$$(0.30\ mg/l)(4.7\ m3/kkg)\left(\frac{kg/m3}{1000\ mg/l}\right) = 0.0014\ kg/kkg$$

The 24-hour maximum is then:

$$(2.1)(0.0014\ kg/kkg) = 0.0029\ kg/kkg$$

D. Chromium: The concentration of chromium was observed as high as 9.3 mg/l in the raw by-product waste stream and averaged 0.10 mg/l in the three 24-hour composite samples (Table 25-6). Literature treatability presented in Table 8-11 indicates an achievable concentration of 0.10 mg/l for alkaline precipitation and settling. Therefore, the proposed maximum 30-day average limitation is:

$$(0.10\ mg/l)(4.7\ m3/kkg)\left(\frac{kg/m3}{1000\ mg/l}\right) = 0.00047\ kg/kkg$$

The 24-hour maximum is then:

$$(2.1)(0.00047\ kg/kkg) = 0.00099\ kg/kkg$$

E. Other pollutants: The concentration basis for copper is also presented in Table 25-11. This concentration is intended to serve as guidance in cases where copper is found to be of serious concern.

25.7.5 Basis for Proposed New Source Performance Standards

Application of Advanced Level Treatment

The advanced control and treatment technology Level 2 is recommended for new formate process sodium hydrosulfite facilities as New Source Performance Standards (NSPS). Therefore, the Agency is proposing limitations based on BAT because of the prohibitive cost associated with additional technology. However, BPT technology could be used when a market is available for the by-product waste water that would obviate the need for its treatment.

Technology Basis

The Agency proposes treatment equal or equivalent to BAT treatment. BAT treatment is discussed previously in Section 25.7.4. Since BAT treatment involves toxic metal removal in the by-product wastes, the Agency proposes BPT treatment in the absence of the by-product waste stream (i.e., if a market is found).

Flow Basis

A plant flow of 4.7 m3/kkg of product is used for the purpose of regulation and cost estimates. The flow is identical for proposed BAT and BPT limitations.

Selection of Pollutants to be Regulated

The primary pollutants of concern include TSS, COD, pH, and the same 7 toxic pollutants selected for BAT. If a market is identified for the by-product wastes, then TSS, COD, pH, pentachlorophenol, and phenol would be selected.

Basis of Pollutant Limitations

Conventional parameters

A. pH: Control of the final effluent within the range of pH 6.0 to 9.0 is required on the basis of data presented in Appendix B of this report and the JRB Study (52).

B. TSS: There is no performance data that may be evaluated to determine a proposed TSS limitation. However, the TSS should not exceed the value proposed for the BPT limitation. NSPS treatment does not include a technology that would affect the TSS value for BPT in Section 25.7.2. Therefore, the proposed maximum 30-day average limitation is 0.12 kg/kkg and 0.44 kg/kkg for the daily maximum TSS (see Table 25-12).

Nonconventional pollutants - The only nonconventional pollutant of concern is COD. NSPS treatment does not include a technology that would affect the COD limitation value developed for BPT in Section 25.7.2. Therefore, the proposed maximum 30-day average limitation is 12 kg/kkg and 45.7 kg/kkg for the daily maximum COD (Table 25-12).

Toxic pollutants - The same 5 toxic pollutants are proposed for limitation as identified in Section 25.7.4 for BAT. The specific numerical limitations are identical to those determined in Table 25-11 for BAT (Table 25-12).

25.7.6 Basis for Proposed Pretreatment Standards

Existing Sources

For Pretreatment Standards for Existing Sources (PSES), the Agency is proposing limitations based on BAT. The pollutants to be limited at this time are COD, zinc, nickel, lead, and chromium (Table 25-11).

New Sources

For Pretreatment Standards for New Sources (PSNS), the Agency is proposing limitations based on NSPS standards. Pollutants limited by proposed PSNS regulations are TSS, COD, zinc, nickel, lead, and chromium (Table 25-12).

TABLE 25-12. PROPOSED LIMITATIONS
Sodium Hydrosulfite
New Source Performance Standards
Waste Water Flow: 4.7 m3/kkg

Pollutant	Performance (mg/l)	VFR[1]	Concentration Basis (mg/l) 30-day Avg	Concentration Basis (mg/l) 24-hr Max	Effluent Limit (kg/kkg) 30-day Avg	Effluent Limit (kg/kkg) 24-hr Max
Conventional and Nonconventional Pollutants						
Total Suspended Solids, TSS	25 [2]	3.6	25[2]	90	0.12	0.43
Chemical Oxygen Demand, COD[3]	2600	3.6	2600[2]	9400	12	43
Toxic Pollutants						
Zinc[3]	0.50	2.1	0.50	1.05	0.0024	0.0050
Nickel[3]	0.20	2.1	0.20	0.42	0.00094	0.0020
Lead[3]	0.30	2.1	0.30	0.63	0.0014	0.0029
Chromium[3]	0.10	2.1	0.10	0.21	0.00047	0.00099
Copper[3]	0.50	2.1	0.50	1.05	--[4]	--[4]

(1) VFR: Ratio of the 24-hour variability factor to the 30-day variability factor.

(2) Based on proposed BPT limitations which do not differ.

(3) Also applicable for pretreatment standards for new sources PSNS limitations which are expressed as concentrations only.

(4) No effluent limitations proposed at this time.

SECTION 26

EXCLUDED SUBCATEGORIES

26.1 ALUMINUM SULFATE

Summary of Determinations

It has been determined that no further effort will be given to developing revised BAT or NSPS for this subcategory. The basis for this recommendation is that there is a zero discharge regulation in effect for BAT and NSPS and it controls toxic pollutants.

Production Process and Effluents

Aluminum sulfate is produced by the reaction of bauxite ore with concentrated sulfuric acid. Ground ore and acid are reacted in a digester yielding aluminum sulfate in solution plus muds and insoluble wastes. The aluminum sulfate is sold as a solution or evaporated to produce a solid product. Waste muds are ponded to allow settling and the clear liquor is returned to the process. Wastes from washing and leaks are directed to the pond and also returned to the process. Toxic pollutants in the pond include zinc, copper, chromium and cadmium. (Raw waste water analyses for 4 plants are attached).

Plants

There are 82 aluminum sulfate producing facilities in the industry.

BPT Limitations

BPT limitations were promulgated March 12, 1974 (40 CFR 415.20). The limitations provide for zero discharge of process waste water except that if the pond has sufficient volume to hold a 10 year, 24 hour storm, the amount of water equal to the precipitation less the evaporation may be discharged. The water must have a pH of 6.0 to 9.0 and average less than 25 mg/l of suspended solids.

BAT, Pretreatment and NSPS Limitations

BAT and NSPS limitations were promulgated on March 12, 1974 (40 CFR 415.23 and 415.25). The limitations provide for zero discharge of process waste water except in the excess of a 25-year, 24-hour storm. These zero discharge limitations adequately control the toxic pollutants. Development of Pretreatment Standards have been deferred to Phase II.

26.2 AMMONIUM CHLORIDE

Summary of Determinations

It has been determined that no further effort be given to developing or revising BAT, NSPS, or Pretreatment regulations and the subcategory is excluded under Paragrph 8 of the Consent Decree. The bases for this determination are: 1) only one of the major producers of ammonium chloride uses the Solvay process. Ammonium chloride is recovered as a by-product. 2) no toxic pollutants were found at significant concentrations in the waste during screening of one ammonium chloride plant.

Production Process and Effluents

Ammonium chloride is used in the manufacture of dry cell batteries, explosives, dyes, washing powder, soldering flux, chemical reagent, and as a medicinal additive to livestock feed. It is also used in pharmaceutical preparations and freezing mixtures.

Ammonium chloride is produced by three methods. A major portion is a by-product in the manufacture of sodium carbonate by the Solvay process. The wastes produced are associated with the sodium carbonate subcategory. A second process produces ammonium chloride by the reaction of hydrogen chloride with ammonia. Discharges from this process come from crystallization and wet scrubber operations.

The industry profile data for this subcategory are given in Table 26.2-1.

Toxic Pollutants

Data have been received on about 50 percent of the industry as a result of Section 308 letters. In addition, a sampling survey for toxic pollutants was made at one plant. The results of the 308 letters and the sampling survey indicate that no toxic pollutants are being discharged in significant quantities.

TABLE 26.2 - 1 . SUBCATEGORY PROFILE DATA SUMMARY

SUBCATEGORY	AMMONIUM CHLORIDE
Total subcategory capacity rate	NA
Total subcategory production rate	NA
Number of plants in this subcategory	6
308 Data on file for	3
With total capacity of	52,400 kkg/year
With total production of	29,800 kkg/year
Representing capacity	NA
Representing production	NA
Plant production range:	
Minimum	4,600 kkg/year
Maximum	13,400 kkg/year
Average production	NA
Median production	NA
Average capacity utilization	NA
Plant age range:	
Minimum	17 years
Maximum	43 years
Waste water flow range:	
Minimum	NA
Maximum	NA
Volume per unit product:	
Minimum	NA
Maximum	NA

Sources of data are Stanford Research Institute, Directory of Chemical Producers, U.S.A., 1977, U.S. Department of Commerce, Current Industrial Reports, December 1977; Energy and Environmental Analysis, Inc.; Draft Report, "Preliminary Economic Assessment of Effluent Limitations in the Inorganic Chemical Industry," June, 1978 and "Economic Analysis of Proposed Revised Effluent Guidelines and Standards for the Inorganic Chemicals Industry," March, 1980

NA= Not Available

Ammonia was found to be the only pollutant of significance. Since ammonia is adequately controlled by the existing BPT regulation 40 CFR 415.242 this subcategory is being excluded under Paragraph 8 of the Consent Decree.

Pollutants found during sampling at one plant are:

Pollutant	Concentration
Chromium	29 µg/l (max.)
Nickel	25 µg/l (max.)
Zinc	29 µg/l (max.)
Ammonia	104 mg/l (avg.)

Status of Regulations

Subpart X has been reserved for this subcategory.

26.3 AMMONIUM HYDROXIDE

Summary of Determinations

It has been determined that no further effort be given to developing BPT, BAT, NSPS, and Pretreatment regulations for the Ammonium Hydroxide Subcategory. The bases for this determination are 1) the process has no toxic pollutants as reactants, and 2) no direct process waters are discharged from manufacturing operations. The subcategory is excluded under Paragraph 8 of the Consent Decree.

Production Processes and Effluents

Ammonium hydroxide is used predominately as a chemical intermediary and reagent. It is also used in the dyeing and bleaching of fabrics, the production of ammonium salts and aniline dyes, and the extraction of alkaloids from plants.

The most common method of ammonium hydroxide production is the modified Haber-Bosch process, wherein hdyrogen and nitrogen are reacted directly over a catalyst surface to form ammonia. The hydroxide is formed by adding water. The only process waste water source is derived from equipment washing.

The industry profile for this subcategory is given in Table 26.3-1.

TABLE 26.3-1 - SUBCATEGORY PROFILE DATA SUMMARY

SUBCATEGORY	AMMONIUM HYDROXIDE
Total subcategory capacity rate	NA
Total subcategory production rate	NA
Number of plants in this subcategory	6
308 Data on file for	
With total capacity of	41,800 kkg/year
With total production of	17,000 kkg/year
Representing capacity	NA
Representing production	NA
Plant production range:	
Minimum	206 kkg/year
Maximum	9,500 kkg/year
Average production	NA
Median production	NA
Average capacity utilization	NA
Plant age range:	
Minimum	10 years
Maximum	26 years
Waste water flow range:	
Minimum	NA
Maximum	NA
Volume per unit product:	
Minimum	NA
Maximum	NA

Sources of data are Stanford Research Institute, Directory of Chemical Producers, U.S.A., 1977, U.S. Department of Commerce, Current Industrial Reports, December 1977; Energy and Environmental Analysis, Inc.; Draft Report, "Preliminary Economic Assessment of Effluent Limitations in the Inorganic Chemical Industry," June, 1978 and "Economic Analysis of Proposed Revised Effluent Guidelines and Standards for the Inorganic Chemicals Industry," March, 1980

NA= Not Available

Toxic Pollutants

Data was received on six of seven plants as a results of 308 letters. In addition, a sampling survey was made at one plant which had a potential for discharge. However, no process water discharge was found at the facility. There are low volume discharges as a result of spills and washdowns. The amount discharged was such that a sample could not be obtained for analysis.

Status of Regulations

None. Because no significant quantities of toxic pollutants are present no further effort will be given to development of pretreatment regulations for this subcategory.

26.4 BARIUM CARBONATE

Summary of Determinations

It has been determined that no further effort be given to developing or revising BPT, BAT, NSPS, and Pretreatment regulations for the Barium Carbonate Subcategory. The basis for this determination is that the small quantities of toxic pollutants found during screening are far below accepted treatability levels.

Production Processes and Effluents

Barium carbonate is used in glass manufacturing, as a flux in ceramics and enamelling, as an intermediate in the production of barium oxide and hydroxide, and as a coating for photographic paper. It is also used in the synthetic dyestuff industry and for the removal of soluble sulfate in brick manufacturing.

Barium sulfide solution is reacted with soda ash to precipitate barium carbonate. The reacted solution is filtered. The filter cake is washed, dried, and calcined. Waste water results from filter cake washing, leaks and spills. The industry profile data for this subcategory are given in Table 26.4-1.

Toxic Pollutants

Data has been received on about 70 percent of the industry as a result of Section 308 letters. In addition, a sampling survey for toxic pollutants was made at one plant. The results of the 308 letters and the sampling survey indicate that no toxic pollutants are being discharged in significant quantities.

TABLE 26.4-1 - SUBCATEGORY PROFILE DATA SUMMARY

SUBCATEGORY	BARIUM CARBONATE
Total subcategory capacity rate	NA
Total subcategory production rate	NA
Number of plants in this subcategory	7
308 Data on file for	5
With total capacity of	57,000 kkg/year
With total production of	48,745 kkg/year
Representing capacity	NA
Representing production	NA
Plant production range:	
Minimum	158 kkg/year
Maximum	26,190 kkg/year
Average production	NA
Median production	NA
Average capacity utilization	NA
Plant age range:	
Minimum	9 years
Maximum	24 years
Waste water flow range:	
Minimum	NA
Maximum	NA
Volume per unit product:	
Minimum	NA
Maximum	NA

Sources of data are Stanford Research Institute, Directory of Chemical Producers, U.S.A., 1977, U.S. Department of Commerce, Current Industrial Reports, December 1977; Energy and Environmental Analysis, Inc.; Draft Report, "Preliminary Economic Assessment of Effluent Limitations in the Inorganic Chemical Industry," June, 1978 and "Economic Analysis of Proposed Revised Effluent Guidelines and Standards for the Inorganic Chemicals Industry," March, 1980

NA= Not Available

The maximum concentration found the raw waste load in sampling for this subcategory were:

Pollutant	Concentration (μg/l)
Nickel	21
Zinc	68

Status of Regulations

Subpart Z has been reserved for this subcategory.

26.5 BORAX

Summary of Determinations

It has been determined that no further effort will be given to developing revised BAT, and NSPS regulations for the Borax Subcategory. The basis for this determination is that existing BPT regulations specify zero discharge of process waste water pollutants to navigable waters. Development of pretreatment regulations is deferred to Phase II.

Production Processes and Effluents

Borax is produced by dissolving sodium borate ores in recycled mother liquors and water. The insolubles settle out in ponds or are removed by thickeners, and the clarified borax solution (mother liquor) is fed to crystallizers where a slurry of borax crystals is formed. The borax is separated from the water by centrifugation, dried, screened and packaged. Process effluents are recycled with excess going to evaporation ponds or returned to source.

Plants

Three plants produce borax in the United States. All three practice total recycle of waste water.

BPT Limitations

BPT limitations were promulgated on May 22, 1975 (40 CFR 415,272), and require no discharge of waste water pollutants to navigable waters.

BAT and NSPS Limitations

BAT and NSPS limitations were proposed on May 22, 1975. They were never promulgated. Since BPT already requires zero discharge, BAT and NSPS are being excluded under Paragraph 8 of the Consent Decree.

26.6 BORIC ACID

Summary of Determinations

It has been determined that no further effort be given to developing or revising BAT, NSPS, or Pretreatment regulations for the boric acid industry. The basis for this determination is that there is only one plant which manufactures boric acid from mined ore. There is an indication that this plant will discontinue operation. All other plants manufacture boric acid using the Trona process and have zero discharge. This subcategory is excluded under Paragraph 8 of the Consent Decree.

Production Processes and Effluents

Boric acid is manufactured by acidification of borax. It is used in the manufacture of chromic oxide, glazes, enamels, textiles, fiberglass, and heat resistant glass. It is also used medicinally as a mild antiseptic and in atomic power plants as a nuclear moderator. Process wastes may consist of excess boric acid liquor, waste sodium sulfate by-product liquor and filtration impurities.

The industry profile data is given in Table 26.6-1.

Toxic Pollutants

Toxic pollutants found at significant concentrations during screening of one plant were:

Pollutant	Concentration (µg/l)
Copper	340
Thallium	140
Zinc	1200
Bis(2-ethylhexyl) phthalate	530
Mercury	1.6

TABLE 26.6-1 - SUBCATEGORY PROFILE DATA SUMMARY

SUBCATEGORY	BORIC ACID
Total subcategory capacity rate	NA
Total subcategory production rate	122,600 kkg/year
Number of plants in this subcategory	3
308 Data on file for	2
With total capacity of	97,500 kkg/year
With total production of	93,850 kkg/year
Representing capacity	NA
Representing production	77 percent
Plant production range:	
Minimum	30,156 kkg/year
Maximum	63,694 kkg/year
Average production	NA
Median production	NA
Average capacity utilization	NA
Plant age range:	
Minimum	30 years
Maximum	83 years
Waste water flow range:	
Minimum	NA
Maximum	NA
Volume per unit product:	
Minimum	NA
Maximum	NA

Sources of data are Stanford Research Institute, Directory of Chemical Producers, U.S.A., 1977, U.S. Department of Commerce, Current Industrial Reports, December 1977; Energy and Environmental Analysis, Inc.; Draft Report, "Preliminary Economic Assessment of Effluent Limitations in the Inorganic Chemical Industry," June, 1978 and "Economic Analysis of Proposed Revised Effluent Guidelines and Standards for the Inorganic Chemicals Industry," March, 1980

NA= Not Available

There is an indication that this plant will discontinue manufacture of boric acid. All other plants have zero discharge because of the use of a different process.

Status of Regulations

Subpart AB has been reserved for this subcategory.

26.7 BROMINE

Summary of Determinations

It has been determined that no further effort will be given to developing or revising BAT, and NSPS regulations for the Bromine Subcategory. The basis for this recommendation is that existing BPT regulations specify zero discharge of process waste water to navigable waters. Development of pretreatment is deferred to Phase II.

Production Processes and Effluents

Most bromine is produced from brimes pumped from brine wells. A small amount (1%) is produced from brines from Searles Lake near Trona, California. This is not a navigable water in that it is 35% solids. The brine, after appropriate dilution and degassing is extracted by debromination with chlorine and steam. The steam and bromine is condensed, separated and distilled to obtain bromine. The raw waste load from the process is the residual brine and the chloride salts formed when the chlorine replaces the bromine. The raw wastes are returned to the brine well or brine source.

Plants

There are nine plants producing bromine in the United States; all of which return their wastes to the brine source.

BPT Limitations

Regulations were promulgated on May 22, 1975, (40 CFR 415.292) requiring zero discharge of process waste water pollutants to navigable waters except that residual brine depleted liquor may be returned to the body of water from which the brine solution was originally withdrawn. In no case is the brine source a navigable water. The source is wells except for a small portion that comes from a "lake" having 35 percent dissolved solids.

BAT and NSPS Limitations

BAT and NSPS were proposed on May 22, 1975, but never finalized. Since BPT already requires zero discharge, BAT and NSPS are being excluded under Paragraph 8 of the Consent Decree.

26.8 CALCIUM CARBIDE

Summary of Recommendations

It has been determined that no additional effort be given to developing revised BAT and NSPS regulations for this subcategory. The basis for this recommendation is that BPT, BAT and NSPS regulations specify zero discharge of process waste water pollutants. Pretreatment standards will be developed under Phase II.

Production Processes and Effluents

Calcium carbide is manufactured by reaction of calcium oxide and coke. Calcium oxide and dried coke are reacted in a furnace and the product is cooled, crushed, screened, packaged and shipped. There are generally no process related waste waters except that one plant had a wet scrubber discharge.

Plant

There are five plants producing calcium carbide.

BPT, BAT and NSDPS Limitations

BPT, BAT and NSPS regulations were promulgated on March 12, 1974 (40 CFR 415.32, 415.33 and 415.35). All subparts require zero discharge of process waste water pollutants. It has been determined that the calcium carbide subcategory will be excluded from development of revised BAT and NSPS limitations because the operations are now subject to zero discharge regulations.

26.9 CALCIUM CARBONATE

Summary of Determinations

It has been determined that no further effort be given to developing or revising BAT, NSPS, and Pretreatment regulations for the Calcium Carbonate Subcategory. The basis for this

determination are: 1) there are only four plants manufacturing calcium carbonate, and 2) the small quantities of pollutants found during screening were at or very near detectable levels of analysis. This subcategory is excluded under Paragraph 8 of the Consent Decree.

Production Processes and Effluents

Calcium carbonate is manufactured both in pure and impure form and is used extensively in many industries. In the pure form, it is used in the rubber, paint, cement, paper and pharmaceutical industries.

In one process slaked lime is reacted in slurry form with carbon dioxide. The slurry is then screened and filtered. The recovered product is dried, milled and packaged for sale. The waste liquor from the filtration step is recycled or discharged, depending on requirements. The coarse materials recovered from the screening step are discharged.

The second process is based on waste streams from the Solvay process. A solution of sodium carbonate and sodium bicarbonate from the soda ash plant is reacted with waste calcium chloride liquor which has been treated through a settler. The calcium carbonate produced together with by-product sodium chloride and unreacted calcium chloride is pumped to a thickener. The overflow from the thickener is collected with plant drainage streams in a sump to which soda ash finishing waste water is added, precipitating calcium carbonate. This mixed stream then goes to waste collection. The calcium carbonate underflow is filtered, washed, atomized with steam, dried in a spray drier, collected in a particle collector and packaged for sale.

An ultrafine grade of calcium carbonate is produced in a similar manner to that described above with some additional polish filtering, tunnel drying and milling. At each plant the neutralized brine and process waste water are returned to the brine cavity. No process waste water is discharged.

The industry profile for this subcategory is given in Table 26.9-1

Toxic Pollutants

There are four plants producing calcium carbonate in the United States. One discharges to a POTW. Data has been received on three plants as a result of Section 308 letters. In addition a sampling survey for toxic pollutants was made at one plant which represents approximately 50% of total industry capacity. The results of the 308 letters and the sampling survey indicate that no toxic pollutants are being discharged.

TABLE 26.9-1 - SUBCATEGORY PROFILE DATA SUMMARY

SUBCATEGORY	CALCIUM CARBONATE
Total subcategory capacity rate	NA
Total subcategory production rate	129,600 kkg/year
Number of plants in this subcategory	NA
308 Data on file for	3
With total capacity of	81,300 kkg/year
With total production of	72,400 kkg/year
Representing capacity	NA
Representing production	56 percent
Plant production range:	
Minimum	555 kkg/year
Maximum	49,800 kkg/year
Average production	NA
Median production	NA
Average capacity utilization	NA
Plant age range:	
Minimum	25 years
Maximum	50 years
Waste water flow range:	
Minimum	NA
Maximum	NA
Volume per unit product:	
Minimum	NA
Maximum	NA

Sources of data are Stanford Research Institute, Directory of Chemical Producers, U.S.A., 1977, U.S. Department of Commerce, Current Industrial Reports, December 1977; Energy and Environmental Analysis, Inc.; Draft Report, "Preliminary Economic Assessment of Effluent Limitations in the Inorganic Chemical Industry," June, 1978 and "Economic Analysis of Proposed Revised Effluent Guidelines and Standards for the Inorganic Chemicals Industry," March, 1980

NA= Not Available

The sampling survey results found pollutant levels below treatability levels.

Maximum concentration of toxic pollutants found in raw waste were:

Pollutant	Concentration (µg/l)
Nickel	21
Zinc	68

Status of Regulations

Interim final regulations (40 CFR 415.302) were published on May 22, 1975. These regulations require control of pH and suspended solids for both the Solvay and lime process. No change in the regulations is needed.

BAT and NSPS regulations (40 CFR 415.303) were proposed on May 22, 1975. These regulations were never finalized. It has been determined that the Calcium Carbonate Subcategory be excluded from the development of BAT and NSPS limitations under Paragraph 8 for the following reasons: There are only four plants manufacturing calcium carbonate and the 308 letters and sampling survey indicate that no toxic pollutants are being discharged in significant quantities.

Because no significant quantities of toxic pollutants are present, no further effort will be given to development of pretreatment regulations for this subcategory.

26.10 CALCIUM CHLORIDE

Summary of Determinations

It has been determined that no further effort be given to developing or revising BAT or NSPS for the Calcium Chloride Subcategory. The bases for this determination are: 1) There are existing BAT and NSPS regulations that prohibit discharge of process waste water pollutants from the brine extraction process and 2) there is only one Solvay process plant in the United States where calcium chloride is recovered as a by-product.

Production Processes and Effluents

There are two processes for the manufacture of calcium chloride. In the first and major production process, calcium

chloride is extracted from natural brines. The salts are solution mined and the resulting brines first are concentrated to remove sodium chloride by precipitation and then purified by the addition of other materials to precipitate sodium, potassium, and magnesium salts. The purified calcium chloride brine is then evaporated to yield a wet solid which is flaked and calcined to a dry solid product. The second process is the Solvay Process which is primarily used for the manufacture of soda ash. In the Solvay Process, calcium chloride is recovered as a by-product. All the wastes from the process are associated with the sodium carbonate subcategory.

Plants

There are 11 plants producing calcium chloride in the United States, one of which recovers it as a by-product from the Solvay Process.

Status of Regulations

Existing regulations for calcium chloride (40 CFR 415.4) include regulations for BAT and NSPS that prohibit discharge of waste water pollutants from the brine process.

26.11 CALCIUM HYDROXIDE

Summary of Determinations

It has been determined that no further effort be given to developing or revising BAT or NSPS for the Calcium Hydroxide Subcategory. The basis for this determination is that an exisitng BPT regulation provides for zero discharge of process waste water pollutants (40 CFR 415.312). Pretreatment regulations will be developed in Phase II.

Production Processes and Effluents

Calicum hydroxide is produced by adding water to calcium oxide in a pug mill premixer. The reacted mixture goes to an agitated hydrator where more water is added, resulting in an exothermic reaction. No waste water is produced and therefore, there is zero discharge to navigable waters.

Plants

There are approximately fifteen plants producing calcium hydroxide in the United States.

26.12 CHROMIC ACID

Summary of Recommendations

It has been determined that no additional effort will be given to developing revised BAT, and NSPS regulations for this subcategory. The basis for this determination is that the existing interim final BPT regulation is zero discharge. Pretreatment standards will be developed in Phase II.

Production Process and Effluents

Sodium dichromate liquor from the dichromate manufacturing operation is reacted with sulfuric acid and filtered to recover impure chromic acid as a solid. The mother liquor is returned to the dichromate process for reuse. The recovered chromic acid is fed to a melter in which the sodium bisulfate liquifies and is separated from the chromic acid. The bisulfate is returned to the dichromate operation. The chromic acid is resolidified, flaked and packaged for sale. Wastes are returned to the dichromate process for reuse.

Plant

There are five plants producing chromic acid.

BPT Limitations

Regulations for BPT were promulgated on May 22, 1975 (40 CFR 415.352). It has been determined that this subcategory will be excluded from development of BAT and NSPS regulations under Paragraph 8 of the Consent Decree because the operations are subject to zero discharge regulations for BPT.

26.13 CUPROUS OXIDE

Summary of Determinations

It has been determined that no further effort be given to developing BPT, BAT, NSPS, and Pretreatment regulations for the Cuprous Oxide Subcategory. The basis for this determination is that there is only one plant manufacturing cuprous oxide. The subcategory is excluded under Paragraph 8 of the Consent Decree.

Production Processes and Effluents

Cuprous oxide is manufactured by reducing cupric oxide by thermal decomposition in an oxygen-free environment. The

reaction occurs at high temperature aided by a proprietary catalyst. There is no process related waste water.

Cuprous oxide is used in the manufacture of glass, ceramics, marine paints, and photoelectric cells. It is also used in agriculture as a seed fungicide, as an antiseptic and as a catalyst.

Status of Regulations

Subpart AK has been reserved for this subcategory (Table 26.13-2).

26.14 FERRIC CHLORIDE

Summary of Determinations

It has been determined that no further effort will be given to developing revised BAT or NSPS regulations for this industry. The basis for this determination is that the existing regulation for BPT is zero discharge. Pretreatment will be developed in Phase II.

Production Processes and Effluents

Ferric chloride is produced from waste pickle liquor. The pickle liquor is reacted with iron, chlorine and hydrochloric acid. The solution is filtered and sold as a solution or evaporated to dryness to produce a solid product. Waste water from filter washes, equipment washing and leaks and spills is returned to the process.

Plants

There are 21 plants producing ferric chloride. Two plants are known to discharge to POTW.

Toxic Pollutants

The source of toxic pollutants is the pickle liquor feed. Toxic pollutants involved are chromium, copper, lead, nickel and zinc.

BPT Limitations

Regulations for BPT were promulgated on May 22, 1975 (40 CFR 415.382), which require zero discharge of process waste water pollutants. The regulations have not been challenged.

BAT and NSPS Limitations

Zero discharge regulations were proposed on May 22, 1975 for BAT and NSPS. Since BPT already requires zero discharge, BAT and NSPS are being excluded under Paragraph 8 of the Consent Decree.

26.15 FERROUS SULFATE

Summary of Determinations

It has been determined that no further effort be given to developing BAT, NSPS, or pretreatment regulations for the Ferrous Sulfate Subcategory. The basis for this determination is that ferrous sulfate is recovered as a by-product and in each of the two processes the wastes are attributable to the primary process. Recovery of ferrous sulfate actually reduces the waste load of both the primary operations. This subcategory is excluded under Paragraph 8 of the Consent Decree.

Production Processes and Effluents

Ferrous sulfate is made using two processes. In the first case it is recovered from the waste sulfuric acid pickle liquor containing ferrous sulfate, ferric sulfate, and unreacted sulfuric acid. The solution is reacted with iron to reduce ferric ions to ferrous ions. The process is a by-product recovery from a waste solution rather than a direct manufacturing process. In the second process, the sulfate process, ferrous sulfate is obtained as a by-product during the manufacture of titanium dioxide. In the sulfate process, titanium dioxide-bearing ores are dissolved in sulfuric acid at a high temperature to produce iron (ferrous sulfate) and titanium sulfate. Iron sulfate is removed by crystallization and titanium sulfate is hydrolyzed and then calcined to produce the final titanium dioxide product. All the wastes from the second process are associated with the titanium dioxide production.

Process waste water is derived principally from gas scrubbers.

Plants

There are 13 producers recovering ferrous sulfate from titanium dioxide manufacture as a by-product or from the waste pickle liquor. Four of the 13 producers recover ferrous sulfate as a by-product from the sulfate process. The ferrous sulfate

subcategory is excluded under Paragraph 8 of the Consent Decree because there is no direct method used for its manufacture and it is either recovered from the waste pickle liquor or as a by-product from the titanium dioxide manufacture and contributes no waste water discharge of its own.

26.16 FLUORINE

Summary of Determinations

It has been determined that no additional effort be given to developing revised BAT or NSPS regulations for this subcategory. The basis for this recommendation is that the existing interim final BPT regulation is zero discharge. Pretreatment standards will be developed in Phase II.

Production Processes and Effluents

Fluorine is produced by electrolysis of liquid hydrogen fluoride. Fluorine is formed at one electrode and hydrogen at the other. The fluorine is compressed and packaged in cylinders. There is no process waste water from this process.

Plants

There are 3 plants producing fluorine.

BPT Limitations

Regulations for BPT were promulgated on May 22, 1975, (40 CFR 415.402) and require zero discharge of process waste water pollutants. The regulations have not been challenged.

BAT and NSPS Limitations

Zero discharge regulations were proposed for BAT and NSPS but never promulgated. Since BPT already requires zero discharge, BAT and NSPS are being excluded under Paragraph 8 of the Consent Decree.

26.17 HYDROCHLORIC ACID

Summary of Determinations

It has been determined that no further effort be given to developing regulations for BPT, BAT, NSPS, or Pretreatment for

the Hydrochloric Acid Subcategory. The bases for this determination is: that the small quantities of toxic pollutants found during screening are far below levels treatable by demonstrated treatment technology. This subcategory is excluded under Paragraph 8 of the Consent Decree.

Production Processes and Effluents

Most of the hydrochloric acid is produced as a by-product in the manufacture of chlorinated organic compounds. It is used in oil well activation, pickling of steel, metal cleaning, in monosodium glutamate manufacture and starch hydrolysis. It is also used as an acid reagent in several chemical manufacturing processes.

The industry profile data for this subcategory is given in Table 26.17-1. The data given and coverage of this subcategory applies only to the manufacture of hydrochloric acid by the thermal combination of chlorine and hydrogen. Wastes from this process come from combustion chamber condensate and from a fume scrubber.

While most of the hydrochloric acid is produced as a by-product in the manufacture of chlorinated organic compounds, the wastes are attributable to the organic compounds involved. This by-product production is not covered in this subcategory.

Toxic Pollutants

Data has been received on about 25% of the industry as a result of Section 308 letters. In addition, a sampling survey for toxic pollutants was made at one plant. The results of the 308 letters and the sampling survey indicate that no toxic pollutants are being discharged in significant quantities. In fact, the results of the survey showed concentrations close to the limits of detectability.

The maximum concentration of priority pollutants found were:

Pollutant	Maximum Concentration Observed (μg/l)
Lead	3.5
Mercury	2
Nickel	5.5

TABLE 26.17-1 - SUBCATEGORY PROFILE DATA SUMMARY

SUBCATEGORY	HYDROCHLORIC ACID
Total subcategory capacity rate	NA
Total subcategory production rate	NA
Number of plants in this subcategory	NA
308 Data on file for	6
With total capacity of	163,000 kkg/year
With total production of	119,000 kkg/year
Representing capacity	NA
Representing production	NA
Plant production range:	
Minimum	NA
Maximum	NA
Average production	NA
Median production	NA
Average capacity utilization	NA
Plant age range:	4 years
Minimum	20 years
Maximum	NA
Waste water flow range:	
Minimum	NA
Maximum	NA
Volume per unit product:	
Minimum	NA
Maximum	NA

Sources of data are Stanford Research Institute, Directory of Chemical Producers, U.S.A., 1977, U.S. Department of Commerce, Current Industrial Reports, December 1977; Energy and Environmental Analysis, Inc.; Draft Report, "Preliminary Economic Assessment of Effluent Limitations in the Inorganic Chemical Industry," June, 1978 and "Economic Analysis of Proposed Revised Effluent Guidelines and Standards for the Inorganic Chemicals Industry," March, 1980

NA = Not Available

Status of Regulations

BPT, BAT, and NSPS regulations (40 CFR 415.72) reguiring zero discharge were promulgated on March 12, 1974. These regulations have since been remanded by the court and are not in effect.

26.18 HYDROGEN

Summary of Determinations

It has been determined that no further effort will be given to developing revised BAT, or NSPS regulations for this subcategory. The basis for this recommendation is that the existing BPT regulation is zero discharge of process waste waters to navigable waters. Pretreatment standards will be developed in Phase II.

Production Processes and Effluents

Hydrogen is made chiefly from two sources: purification of petroleum refinery by-product gases and as a co-product in the manufacture of carbon monoxide. In the latter case the wastes are attributed to the carbon monoxide subcategroy. Only the production of hydrogen from refinery by-product gases will be discussed.

Crude hydrogen as a refinery by-product is passes through a catalytic bed to remove oxygen and a drier to remove the water formed by the catalytic reaction. The gas is then cooled, purified and passed through a converter to change ortho-hydrogen to the para-form. Hydrogen is usually cooled to a liquid form for storage or shipping. No contact process water is used during the manufacture.

Plants

There are approximately 137 plants producing hydrogen. None are known to have discharges.

BPT Limitations

Regulations were promulgated on May 22, 1975, (40 CFR 415.412) requiring zero discharge of process waste water pollutants to navigable waters. Only contaminated non-process water is allowed. This includes rain water, waters which come in contact with accidental spills and leaks, and discharges for personal safety. All reasonable measures must have been made to prevent, reduce, and control each contact and to mitigate the effects.

BAT and NSPS Limitations

BAT and NSPS were proposed on May 22, 1975, requiring zero discharge of process waste water to navigable waters. Since BPT already requires zero discharge, BAT and NSPS are being excluded under Paragraph 8 of the Consent Decree.

26.19 IODINE

Summary of Determinations

It has been determined that no additional effort will be given to developing revised BAT or NSPS regulations. The basis for this determination is that the existing regulation for BPT is zero discharge. Pretreatment standards will be developed in Phase II.

Production Process and Effluents

Iodine is produced from brine solutions containing iodine. The brine is acidified and chlorinated liberating free iodine. The free iodine is stripped from the brine and treated again with chlorine yielding solid iodine. The slurry is filtered, treated with sulfuric acid and refiltered. The product is then crushed and packaged for sale. The wastes from this process are spent brine solutions which are returned to the well from which the brine was initially obtained.

Plants

There are 4 plants producing iodine.

BPT Limitations

Regulations for BPT were promulgated on May 22, 1975, (40 CFR 415.432) and require zero discharge of process waste water pollutants. The regulations have not been challenged.

BAT and NSPS Limitations

Zero discharge regulations were proposed for BAT and NSPS on May 22, 1975. Since BPT already requires zero discharge, BAT and NSPS are being excluded under Paragraph 8 of the Consent Decree.

26.20 LEAD MONOXIDE

Summary of Determinations

It has been determined that no further effort will be given to developing BAT or NSPS, regulations for this subcategory. The basis for this recommendation is that the existing BPT regulation requires zero discharge. Pretreatment standards will be developed in Phase II.

Production Processes and Effluents

Lead monoxide is produced by the thermal oxidation of lead. There are no process waste water streams generated by lead monoxide production. Dust control is the problem in this subcategory. Use of dry collection systems rather than a water collection system is the control technology for meeting the regulation.

Plants

There are 15 plants producing lead monoxide in the United States. Ten plants are known to use dry bag collection systems and have no discharge of waste water. Other are subject to existing zero discharge regulations.

BPT Limitations

BPT limitations were published on May 22, 1975 (40 CFR 415.442). The limitations require zero discharge of process waste water pollutants into navigable waters.

BAT and NSPS Limitations

On May 22, 1975, zero discharge regulations were proposed but never promulgated for BAT and NSPS. Since BPT already requires zero discharge, BAT and NSPS are being excluded under Paragraph 8 of the Consent Decree.

26.21 LITHIUM CARBONATE

Summary of Determinations

It has been determined that no further efforts be given to developing or revising regulations for BPT, BAT, NSPS, or Pretreatment for the Lithium Carbonate Subcategory. The bases for this determination are: 1) there is only one plant in this

subcategory using the spodumene ore process and discharging process waste water and 2) there is an existing zero discharge regulations for the brine process. This subcategory is excluded under Paragraph 8 of the Consent Decree.

Production Processes and Effluents

Lithium carbonate is produced by two processes. In one process, spodumene ore is heated at a high temperature to render it highly reactive. It is then cooled, ball-milled, and mixed with concentrated sulfuric acid. The acid-roasted ore is leached with water, and the excess acid is neutralized with ground limestone. This mixture is filtered and further treated with lime and soda ash. Further processing precipitates lithium carbonate. Wet scrubbers are the sources of waste water. Significant quantities of any known toxic pollutants are not found in the waste water.

In the other process, lithium carbonate is produced by the reaction of lime with concentrated brine, and lithium carbonate is precipitated by filtration. Process waste water consists of spent brines, which are sent to on-site evaporation ponds. These is no process waste water discharge from this process.

Status of Regulations

There is an existing BPT regulation for this subcategory (40 CFR 415.452).

26.22 MANGANESE SULFATE

Summary of Determinations

It has been determined that no further effort be given to developing or revising BPT, BAT, NSPS, or Pretreatment regulations for the Manganese Sulfate Subcategory. The bases for this determination are: 1) there is only one plant making commerical grade manganese sulfate that has a waste water discharge, and 2) the amount of waste water produced by that plant is low. The subcategory is excluded under Paragraph 8 of the Consent Decree.

Production Processes and Effluents

There are two processes for the manufacture of manganese sulfate; the hydroquinone process and the coke and ore process. In the hydroquinone process, manganese ore, aniline and sulfuric

acid are reacted to produce manganese sulfate, quinone and ammonium sulfate. The reacted mixture is steam distilled to remove quinone which is further processes to hydroquinone. The mixture of manganese and ammonium sulfate is filtered, evaporated, and crystallized. Managanese sulfate is recovered as crystals, and the spent liquor contains ammonium sulfate. In the second process, manganese ore and coke are reacted in a kiln and the product is leached with sulfuric acid. The resulting slurry is evaporated to dryness to recover a 30 percent product for agricultural purposes. The amount of waste water produced from the hydroquinone process is small and the other process produces no waterborne waste.

Plants

Four plants are manufacturing manganese sulfate. Two of the producers use it for fertilizer production and they generate no waterborne wastes. One plant produces reagent grade product and the total production is very low. Only one other plant manufactures manganese sulfate (commercial grade) and has a significant waste water flow.

Status of Regulations

Since only one manganese sulfate plant discharges waste to navigable waters, the subcategory is excluded from federal discharge regulation for BPT, BAT, NSPS, and pretreatment standards, under Paragraph 8 of the Consent Decree.

26.23 NITRIC ACID

Summary of Determinations

The existing nitric acid regulation in the fertilizer category (40 CFR 418.5) is applicable to all nitric acid plants captive to a fertilzer production facility. In addition, sampling has shown that there are no significant quantities of toxic pollutants in the process waste waters from stand alone nitric acid plants. Further BPT, BAT, NSPS, or Pretreatment regulations will not be developed for this subcategory.

Production Processes and Effluents

Most of the nitric acid produced is used in the manufacture of ammonium nitrate and other nitrogen fertilizers. On site captive use is extensively practiced. It is also used in the manufacture of explosives, plastics and other organic products. Other uses are as an acidic and pickling agent. The source of process waste water is equipment washing operations.

The industry profile data for this subcategory are given in Table 26.23-1.

Toxic pollutants found in raw wastes during sampling were as follows:

Pollutant	Maximum Concentration Observed (µg/l) Screening (2 Plants)	Verification (1 Plant)
Chromium	110	100
Zinc	120	791
Lead	29	< 10
Mercury	.47	4.5
Silver	.5	< 15
2,4-Dinitrophenol	215	Not Analyzed
Nickel	170	85
Cyanide	< .04	< .02

The 2,4-Dinitrophenol is caused by contamination from organic products manufactured at the plant and will be addressed in that guideline. The chromium and zinc are ingredients of cooling water conditions present in the blowdown which is mixed with process streams. Appropriate control is by best management practice not end-of-pipe treatment via national regulation. Other metals are below the limit of treatability.

Status of Regulations

Subpart V has been reserved for this subcategory.

26.24 OXYGEN AND NITROGEN

Summary of Determinations

It has been determined that no further effort be given to developing or revising regulations for BAT, NSPS, or Pretreatment for the Oxygen and Nitrogen Subcategory. The bases for this determination are: 1) the waste water discharge mainly consists of compressor water, and 2) the only toxic pollutant detected at or above treatability level was copper which is at the level of treatability. This subcategory is excluded under Paragraph 8 of the Consent Decree.

TABLE 26.23-1 - SUBCATEGORY PROFILE DATA SUMMARY

SUBCATEGORY	NITRIC ACID
Total subcategory capacity rate	9,177,000 kkg/year
Total subcategory production rate	7,171,000 kkg/year
Number of plants in this subcategory	87
308 Data on file for	11
With total capacity of	1,106,000 kkg/year
With total production of	774,400 kkg/year
Representing capacity	12 percent
Representing production	11 percent
Plant production range:	
Minimum	NA
Maximum	NA
Average production	NA
Median production	NA
Average capacity utilization	NA
Plant age range:	
Minimum	4 years
Maximum	83 years
Waste water flow range:	
Minimum	NA
Maximum	NA
Volume per unit product:	
Minimum	NA
Maximum	NA

Sources of data are Stanford Research Institute, Directory of Chemical Producers, U.S.A., 1977, U.S. Department of Commerce, Current Industrial Reports, December 1977; Energy and Environmental Analysis, Inc.; Draft Report, "Preliminary Economic Assessment of Effluent Limitations in the Inorganic Chemical Industry," June,1978 and "Economic Analysis of Proposed Revised Effluent Guidelines and Standards for the Inorganic Chemicals Industry," March, 1980

NA = Not Available

Production Processes and Effluents

Oxygen and nitrogen are produced from air by distillation of liquefied air. Oxygen is used in the production of steel, gas welding, medicine, jet fuel, in sewage treatment plants and in the manufacture of ethylene and acetylene. In rocket propulsion, liquid oxygen is often used as a cryogenic liquid oxidizer.

The greatest use of nitrogen is in the manufacture of ammonia by the Haber process. It is also used in cryosurgery. As an inert gas, it is used to prevent oxidation by air. In the liquid form, it is used for low temperature refrigeration.

The waste water discharge mainly consists of compressor cooling water. Other waste waters are small quantities of boiler blowdown, intake air scrubber waters, and compressor condensate.

The industry profile for this subcategory is given in Table 26.24-1.

Toxic Pollutants

Data has been received on 10 plants as a result of Section 308 letters. There are at least 230 plants in the United States. However all operate using the same basic process. One plant was sampled during the screening program Toxic pollutants found in the raw waste loading during sampling were:

Pollutant	Concentration (μg/l)
Chromium	26
Copper	590
Lead	51
Nickel	79
Zinc	170

The likely sources of copper are corrosion and bearing wear, and concentration in boiler and cooling tower blowdowns. The copper levels are at the accepted levels of treatment, therefore further reduction is not practical.

TABLE 26.24-1 - SUBCATEGORY PROFILE DATA SUMMARY

SUBCATEGORY OXYGEN AND NITROGEN

Total subcategory capacity rate	35,526,000 kkg/year
Total subcategory production rate	NA
Number of plants in this subcategory	113
308 Data on file for	9
With total capacity of	1,588,000 kkg/year
With total production of	1,473,000 kkg/year
Representing capacity	4.5 percent
Representing production	NA
Plant production range:	
Minimum	2,400 kkg/year
Maximum	378,000 kkg/year
Average production	NA
Median production	NA
Average capacity utilization	NA
Plant age range:	
Minimum	4 years
Maximum	36 years
Waste water flow range:	
Minimum	NA
Maximum	NA
Volume per unit product:	
Minimum	NA
Maximum	NA

Sources of data are Stanford Research Institute, Directory of Chemical Producers, U.S.A., 1979, U.S. Department of Commerce, Current Industrial Reports, December 1977; Energy and Environmental Analysis, Inc.; Draft Report, "Preliminary Economic Assessment of Effluent Limitations in the Inorganic Chemical Industry," June, 1978 and "Economic Analysis of Proposed Revised Effluent Guidelines and Standards for the Inorganic Chemicals Industry," March, 1980

NA = Not Available

Status of Regulations

Interim Final BPT regulations (40 CFR 41.5492) were promulgated on May 22, 1975. These regulations require limiations on pH and oil and grease. These regulations remain in effect and no change is needed.

BAT and NSPS regulations (40 CFR 415.494) were proposed on May 22, 1975. These regulations were never finalized. It has been determined that the Oxygen and Nitrogen Subcategory be excluded from the development of BAT and NSPS limitations under Paragraph 8 of the Consent Decree for the following reasons: The discharge consists of compressor water wherein the only toxic pollutant found is copper which is at the level of treatability.

26.25 POTASSIUM CHLORIDE

Summary of Determinations

It has been determined that no further effort will be given to developing revised BAT or NSPS regulations for the potassium chloride subcategory. The basis for this determination is that existing BPT regulations specify zero discharge of process waters. Pretreatment standards will be developed in Phase II.

Production Processes and Effluents

Potassium chloride is produced in the U.S. by two pincipal processes: extraction from sylvite ore and extraction from lake brine (Trona Process). Sylvite ore is a combination of potassium chloride and sodium chloride. The ore is crushed, screened, and wet-ground in brine. The ore is then separated from clay impurities in a desliming process. The clay impurities are fed to a gravity separator which removes some of the sodium chloride precipitated from the leach brine and insolubles for disposal as waste. After desliming, the ore is chemically treated and the potassium chloride is separated from the sodium chloride in a flotation process. The tailings from flotation are wasted and the resulting potassium chloride slurries are centrifuged to recover the potassium chloride. The product is then dried, screened, and packaged. The centrifuge liquors are recycled to the flotation circuit.

The Trona Process uses a cyclic evaporation-crystallization system in which saline brine is evaporated to nominal dryness. The brine and recycle liquor is concentrated in triple effect evaporators to produce a hot liquor high in potassium chloride

and borax. Large quantities of sodium chloride and burkeite ($Na_2CO_3.Na_2SO_4$) are crystallized and separated during evaporation. The sodium chloride is returned to the brine source, and the burkeite is transported to other processes for separation and refining. The hot liquor is then cooled rapidly in vacuum crystallizers and the potassium chloride is filtered from the slurry. The potassium chloride is then dried and packaged. A small portion may be refined further and/or converted to potassium sulfate. The cool liquor remaining is then allowed to crystallize the remaining borax which is then refined further using recrystallization and other processes. The remaining liquor is recyceld back to the evaporation-crystallization step.

Plant

There are thirteen plants producing potassium chloride, two of which use the Trona Process.

BPT Regulations

BPT regulations were promulgated on May 22, 1975 (40 CFR 415.502) requiring zero discharge of process waste water pollutants to navigable waters, except that residual brine and depleted liquor may be returned to the body of water from which the brine solution was withdrawn. There are no instances where the brine source is a navigable water.

BAT and NSPS Limitations

BAT and NSPS were proposed on May 22, 1975, requiring zero discharge of process waste water to navigable waters. It has been determined that the potassium chloride subcategory will be excluded from the development of revised BAT and NSPS limitations under Paragraph 8 of the Consent Decree since a zero discharge regulation is in effect. In the absence of BAT and NSPS regulations, permits will be based on BPT.

26.26 POTASSIUM DICHROMATE

Summary of Determinations

It has been determined that no further effort will be given to developing revised BAT and NSPS regulation for the Potassium Dichromate Subcategory. The basis for this recommendation is that existing BPT, BAT and NSPS regulations specify zero discharge of process waste water pollutants to navigable waters. Pretreatment standards will be developed in Phase II.

Production Processes and Effluents

Potassium dichromate is made by reacting a sodium dichromate dihydrate solution with potassium chloride. The potassium dichromate is crystallized from solution requiring only removal of water prior to sizing and packaging. The process water is recycled back to the initial reaction tank.

BPT, and NSPS Limitations

BPT, BAT and NSPS limitations were promulgated March 12, 1974 (40 CFR 415.122, 415.123 and 415.125). All subparts require zero discharge of process waste water pollutants to navigable waters.

It has been determined that the potassium dichromate subcategory will be excluded from the development of revised BAT and NSPS limitations under Paragraph 8 of the Consent Decree. The basis for this determination is that by maintaining existing BPT, BAT and NSPS limitations, no discharge of waste water pollutants to navigable waters will occur.

26.27 POTASSIUM IODIDE

Summary of Determinations

It has been determined that no further effort be given to developing or revising BAT, NSPS, and Pretreatment regulations for the Posassium Iodide Subcategory. The bases for this determination are: 1) because the waste water discharge is less than 100 gallons per day, the quantity of pollutants discharged is very low; and 2) the concentration of the toxic pollutants are at or below accepted treatment levels. This subcategory is excluded under Paragraph 8 of the Consent Decree.

Production Processes and Effluents

Potassium iodide is used in photographic emulsions, in animal and poultry feeds, table salts and analytical chemistry. It also has a number of medical uses.

One manufacturing process is known as the iron carbonate process. This involves the reaction of iron power with iodine in aqueous solution. An intermediate compound, ferrosoferricyanide, is formed which is subsequently reacted with potassium carbonate to yield potassium iodide. The raw product is purified, concentrated by evaporation and cooled to promote crystallization. Water used directly in the process is lost by evaporation. The only source of process waste water is from equipment wash down operations.

The industry profile for this subcategory is given in Table 26.27-1.

Toxic Pollutants

Data has been received for approximately 50% of the industry as a result of section 308 letters. In addition, a sampling survey was made at one plant. The following toxic pollutants were identified in the plant wastes:

Pollutant	Concentration(μg/l)
Antimony	48
Chromium	22
Copper	1040
Lead	26
Silver	34
Zinc	30

However, the levels of these pollutants are at or below accepted levels of treatability. In addition, the flows are less than 100 gallons per day. At the one plant sampled, there was no process waste water discharged since the wash water was sent to an evaporation pond.

Status of Regulations

BPT Limitations

BPT regulations (40 CFR 415.511) were promulgated on May 22, 1975. These regulations require limitations on pH, TSS, sulfide, iron and barium. These regulations are adequate for the control of conventional and nonconventional pollutants.

BAT and NSPS Regulations

NSPS and BAT limitations were proposed on May 22, 1975, but never finalized. It has now been determined that the Potassium Iodide Subcategory be excluded form the development of BAT and NSPS limitations under Paragraph 8 of the Consent Decree for the following reasons: 1) very small quantities of toxic pollutants are discharged from this industry, and 2) those pollutants discharged are at or below accepted treatability levels.

Pretreatment Limitations

Because no significant quantities of toxic pollutants are present no further effort will be given to development of pretreatment regulations for this subcategory.

TABLE 26.27-1 - SUBCATEGORY PROFILE DATA SUMMARY

SUBCATEGORY	POTASSIUM IODIDE
Total subcategory capacity rate	NA
Total subcategory production rate	NA
Number of plants in this subcategory	9
308 Data on file for	4
With total capacity of	1,985 kkg/year
With total production of	1,300 kkg/year
Representing capacity	NA
Representing production	50 percent
Plant production range:	
Minimum	79 kkg/year
Maximum	634 kkg/year
Average production	NA
Median production	NA
Average capacity utilization	NA
Plant age range:	
Minimum	27 years
Maximum	42 years
Waste water flow range:	
Minimum	NA
Maximum	NA
Volume per unit product:	
Minimum	NA
Maximum	NA

Sources of data are Stanford Research Institute, Directory of Chemical Producers, U.S.A., 1977, U.S. Department of Commerce, Current Industrial Reports, December 1977; Energy and Environmental Analysis, Inc.; Draft Report, "Preliminary Economic Assessment of Effluent Limitations in the Inorganic Chemical Industry," June, 1978 and "Economic Analysis of Proposed Revised Effluent Guidelines and Standards for the Inorganic Chemicals Industry," March, 1980

NA = Not Available

26.28 POTASSIUM METAL

Summary of Determinations

It has been determined that no further effort will be given to developing revised BAT or NSPS regulations for the Potassium Metal Subcategory. These bases for this recommendation are: 1) existing BPT, BAT and NSPS regulations specify zero discharge of process waste waters; and 2) there is only one plant producing potassium in the U.S. and that plant uses a dry process. Pretreatment standards will be developed in Phase II.

Production Processes and Effluents

Potassium metal is prepared by melting potassium chloride in a gas-fired melt pot prior to being fed to an exchange column. The molten potassium chloride flows down through a packed column, where it is contacted by ascending sodium vapors coming from a gas-fired reboiler. The reaction yields elemental potassium and sodium chloride, which is withdrawn continuously from the base of the apparatus. The elemental potassium is withdrawn as an overhead product. No process water is used so there are no waterborne effluents.

Plant

Only one plant produces potassium metal in the U.S. It uses no process water and there are no waterborne effluents.

BPT, BAT and NSPS Limitations

BPT, BAT and NSPS limitations were promulgated March 12, 1974 (40 CFR 415.112, 415.113 and 415.115). All subparts require zero discharge of process waste water pollutants to navigable waters.

It has been determined that the potassium metal subcategory will be excluded from the development of revised BAT and NSPS limitations under Paragraph 8 of the Consent Decree. Maintaining the existing regulations will eliminate the discharge of toxic pollutants.

26.29 POTASSIUM PERMANGANATE

Summary of Determinations

It has been determined that no further effort be given to developing BPT, BAT, NSPS, and Pretreatment regulations for the Potassium Permanganate Subcategory. The basis for this

determination is that there is only one plant manufacturing Potassium Permanganate. The subcategory is excluded under Paragraph 8 of the Consent Decree.

Production Processes and Effluents

Manganese ore is slurried with potassium hydroxide solution and treated with oxygen to produce potassium manganate. This intermediate product and the ore wastes are recovered by centrifugation and the solids are then leached to dissolve the manganate. The resulting slurry is filtered to remove the ore wastes and the manganate converted in electrolytic cells. The permanganate is crystallized from the solution to form the product.

26.30 POTASSIUM SULFATE

Summary of Determinations

It has been determined that no further effort be given to developing or revising BPT, BAT, NSPS for the Potassium Sulfate Subcategory. The bases for this determination are there is an existing regulation for BAT and NSPS that requires zero discharge of process waste water pollutants (40 CFR 415.133 and 415.135). The subcategory is excluded under Paragraph 8 of the Consent Decree. Pretreatment standards will be developed in Phase II.

Production Processes and Effluents

Potassium sulfate is produced by the reaction in solution of potassium chloride with langbeinite ore. Langbeinite ore is a natural sulfate of potassium and magnesium ($K_2SO_4.MgSO_4$), usually intermixed with sodium chloride. When the reacted solution is partially evaporated, potassium sulfate precipitates out, and is recovered by centrifugation or filtration from the brine liquor, dried, and sold. The remaining brine liquor containing maganesium chloride is the source of raw waste. Depending on the sodium content of the ore used, the brine is either sold (low sodium content) or is ponded. In the latter case, the brine liquor is recycled or evaporated and the mud is landfilled. Therefore, no discharge results from the production of potassium sulfate.

Plants

There are approximately eight producers of commercial grade potassium sulfate in the United States.

26.31 SODIUM BICARBONATE

Summary of Determinations

It has been determined that no further effort will be given to developing revised BAT and NSPS regulations for the Sodium Bicarbonate Subcateory. The basis for this determination is the existing BPT, BAT and NSPS regulations specify zero discharge of process waste water pollutants to navigable waters. Pretreatment standards will be developed in Phase II.

Production Processes and Effluents

Sodium bicarbonate is produced by reaction of sodium carbonate with water and carbon dioxide under pressure. The bicarbonate precipitates from the solution and is filtered, washed, dried, and packaged. Waste water from the filtration is used in product scrubbers and then returned to the process.

Plants

Four plants produce sodium bicarbonate in the United States.

BPT, BAT and NSPS Limitations

BPT, BAT and NSPS limitations were promulgated March 12, 1974 (40 CFR 415.142, 415.143 and 415.145). All subparts require zero discharge of process waste water pollutants to navigable waters.

It has been determined that the sodium bicarbonate subcategory will be excluded from the development of revised BAT and NSPS limitaions under Paragraph 8 of the Consent Decree. The basis for the determination is that maintaining the existing regulations will eliminate the discharge of toxic pollutants.

26.32 SODIUM CARBONATE

Summary of Determinations

It has been determined that no further effort be given to developing or revising BAT, NSPS, or pretreatment regulations for the Sodium Carbonate Subcategory. The bases for this determination are: 1) no waste water is discharged to navigable waters from the plants using natural deposits to produce sodium carbonate, and 2) only one plant exists that uses the Solvay Process to produce sodium carbonate. This subcategory is

excluded under Paragraph 8 of the Consent Decree. The Solvay Process does have a discharge but because there is only one plant it is inappropriate to write a regulation for the subcategory.

Production Processes and Effluents

Two methods are used for the production of sodium carbonate. One method is the recovery from natural sodium carbonate deposit and the other method is the Solvay process. The waste water resulting from the use of natural deposits is sent to evaporation ponds and no water is discharged to navigable streams. In the Solvay process, sodium chloride (brine) is purified and saturated with ammonia and then chlorinated. The reacted solution is filtered and sodium bicarbonate is removed as a filter cake. The filter cake is calcined to produce sodium carbonate, driving off moisture and carbon dioxide. The production of sodium carbonate by the Solvay process requires the use of large volumes of water for non-contact cooling and process contact purposes and generates large loads of suspended solids, alkalinity, and ammonia.

Plants

Only one plant uses the Solvay process to produce sodium carbonate. The Solvay process is energy intensive and generates large pollution loads. The process is being replaced by production from natural deposits. It is unlikely that new Solvay process plants will be built in the future. The industry profile is presented in Table 26.32-1.

The other plants using natural deposits have zero discharge.

Status of Regulations

The regulation originally established has been remanded by the court. The Solvay process does have a discharge but because there is only one plant is is inappropriate to write regulations for this subcategory.

26.33 SODIUM CHLORIDE

Summary of Determinations

It has been determined that no further effort be given to developing or revising BAT and NSPS regulations for the Sodium Chloride Subcategory. The basis for this determination is that there are exisitng BAT and NSPS regulations that prohibit

TABLE 26.32-1 - SUBCATEGORY PROFILE DATA SUMMARY

SUBCATEGORY	SODIUM CARBONATE
Total subcategory capacity rate	8,650,000 kkg/year
Total subcategory production rate	NA
Number of plants in this subcategory	10
308 Data on file for	8
With total capacity of	3,629,000 kkg/year
With total production of	2,828,000 kkg/year
Representing capacity	42 percent
Representing production	NA
Plant production range:	NA
Minimum	NA
Maximum	NA
Average production	NA
Median production	NA
Average capacity utilization	NA
Plant age range:	
Minimum	10 years
Maximum	95 years
Waste water flow range:	
Minimum	NA
Maximum	NA
Volume per unit product:	
Minimum	NA
Maximum	NA

Sources of data are Stanford Research Institute, Directory of Chemical Producers, U.S.A., 1977, U.S. Department of Commerce, Current Industrial Reports, December 1977; Energy and Environmental Analysis, Inc.; Draft Report, "Preliminary Economic Assessment of Effluent Limitations in the Inorganic Chemical Industry," June, 1978 and "Economic Analysis of Proposed Revised Effluent Guidelines and Standards for the Inorganic Chemicals Industry," March, 1980

NA = Not Available

discharge of process waste water (40 CFR 415.163 and 415.165). The subcategory is excluded under Paragraph 8 of the Consent Decree. Pretreatment standards will be developed in Phase II.

Production Processes and Effluents

Sodium chloride is produced by three methods: 1) solar evaporation of sea water, 2) solution mining of natural brines, and 3) mining of rock salt.

In the solar evaporation process, salt water is concentrated by evaporation in open ponds to yield a saturated brine solution. After saturation is reached, the brine is fed to a crystallizer, wherein sodium chloride precipitates, leaving behind a concentrated brine solution (bittern) consisting of sodium, potassium, and magnesium salts. The precipitated sodium chloride is recovered for sale and the brine is recycled to recover additional sodium chloride. No discharge results from the operation.

The brine is the second process is first aerated to remove hydrogen sulfide. The brine is then pumped to settling tanks where it is treated with caustic soda and soda ash to remove most of the calcium, magnesium, and iron present as insoluble salts. After clarification to remove these insolubles, the brine is then sent to multiple effect evaporators. As water is removed, salt crystals form and are removed as a slurry. The slurry is washed with fresh brine to remove calcium sulfate. The washed slurry is filtered, the mother liquor is returned to evaporators, and the crystals from the filter are dried and screened. Wastes are generated from the multiple effect evaporators and driers, basic brine purification, and from water treatment. Zero aqueous discharge can be accomplished by replacing barometric condensors with non-contact exchangers, eliminating packing station wastes by more efficient design, and recycling all process water.

Mining of rock salt produces no process waste water.

26.34 SODIUM FLUORIDE

Summary of Determinations

It has been determined that no further effort will be given to developing revised BAT, or NSPS regulations for this subcategory. The basis for this determination is that existing BPT regulations are zero discharge of process waste water to navigable waters. Pretreatment standards will be developed in Phase II.

Production Processes and Effluents

Sodium fluoride is made by two similar processes. Anhydrous hydrofluoric acid may be reacted with sodium carbonate. The solution is then sent to a vacuum filter to recover product sodium fluoride. Process wastes from this process consist of filtrate, mother liquors, wash down waters and scrubber solutions which are recycled. The mother liquor and washdown waters generally contain sodium carbonate and waste sodium fluoride.

Sodium fluoride may also be produced by the reaction of sodium silicofluoride with sodium hydroxide. The solution is fed to a multi-stage separator, wherein the sodium fluoride is separated from the sodium silicate solution. The product sodium fluoride is washed, dried and packaged. Process waste water from this process consists of waste liquor containing sodium silicate and sodium fluoride, wet scrubber blowdown and wash waters.

Plants

There are four known plants presently manufacturing sodium fluoride in the United States. Total recycle of process waste waters is practice at each plant.

BPT Limitations

BPT regulations were promulgated on May 22, 1975 (40 CFR 415.552) requiring zero discharge of process waste water pollutants to navigable waters. The only discharge permitted is contaminated nonprocess waste water from 1) rainfall runoff; 2) accidental spills and leaks; and 3) discharges from personnel safety equipment provided that reasonable efforts are made to prevent, reduce, and control each contact and to mitigate its effects. Since BPT effectively requires no discharge no BAT or NSPS regulation is necessary.

26.35 SODIUM HYDROSULFIDE

Summary of Determinations

It has been determined that no further effort be given to developing regulations for BPT, BAT, NSPS, or Pretreatment for the Sodium Hydrosulfide Subcategory. The basis for this determination is that no toxic pollutants were found at significant levels in the process related waste water during the screening of one plant. The subcategory is excluded under Paragraph 8 of the Consent Decree.

Production Processes and Effluents

Sodium hydrosulfide is produced by reaction of hydrogen sulfide with sodium hydroxide. Sodium hydrosulfide is used in the manufacture of sodium sulfide, other chemicals, and paper (Kraft). It is also used in dehairing of hides and industrial waste water treatment. Process waste water may be derived from filter backwash water.

The subcategory profile data are given in Table 26.35-1.

Toxic Pollutants

Toxic pollutants found in the waste during screening of one plant were phenol (76 μg/l) and naphthalene (90 μg/l) which are below treatability levels. Due to the very small flows and waste loads generated by this industry, this subcategory is excluded under Paragraph 8 of the Consent Decree.

Status of Regulations

Subpart BD has been reserved for this subcategory.

26.36 SODIUM METAL

Summary of Determinations

It has been determined that no further effort be given to developing or revising BPT, BAT, NSPS, or Pretreatment regulations for the Sodium Metal Subcategory. The basis for this determination is that the small quantities of toxic pollutants found during screening are far below accepted treatability levels. This subcategory is excluded under Paragraph 8 of the Consent Decree.

Production Processes and Effluents

Sodium metal is manufactured with chlorine by electrolysis of fused sodium chloride. It is used in the production of tetraethyl lead, sodium cyanide, sodium peroxide, and titanium and zirconium metals. In liquid form, it is used as a nuclear reactor coolant; it is also used as a light, thermally conductive solid in various applications.

The industry profile for this subcategory is given in Table 26.36-1.

TABLE 26.35-1 - SUBCATEGORY PROFILE DATA SUMMARY

SUBCATEGORY	SODIUM HYDROSULFIDE
Total subcategory capacity rate	NA
Total subcategory production rate	NA
Number of plants in this subcategory	12
308 Data on file for	3
With total capacity of	56,900 kkg/year
With total production of	44,700 kkg/year
Representing capacity	NA
Representing production	NA
Plant production range:	
Minimum	3,800 kkg/year
Maximum	36,500 kkg/year
Average production	NA
Median production	NA
Average capacity utilization	NA
Plant age range:	
Minimum	5 years
Maximum	14 years
Waste water flow range:	
Minimum	NA
Maximum	NA
Volume per unit product:	
Minimum	NA
Maximum	NA

Sources of data are Stanford Research Institute, Directory of Chemical Producers, U.S.A., 1977, U.S. Department of Commerce, Current Industrial Reports, December 1977; Energy and Environmental Analysis, Inc.; Draft Report, "Preliminary Economic Assessment of Effluent Limitations in the Inorganic Chemical Industry," June, 1978 and "Economic Analysis of Proposed Revised Effluent Guidelines and Standards for the Inorganic Chemicals Industry," March, 1980

NA = Not Available

TABLE 26.36-1 - SUBCATEGORY PROFILE DATA SUMMARY

SUBCATEGORY	SODIUM METAL
Total subcategory capacity rate	381,000 kkg/year
Total subcategory production rate	NA
Number of plants in this subcategory	5
308 Data on file for	3
With total capacity of	96,340 kkg/year
With total production of	78,541 kkg/year
Representing capacity	25 percent
Representing production	NA
Plant production range:	
Minimum	NA
Maximum	NA
Average production	NA
Median production	NA
Average capacity utilization	NA
Plant age range:	
Minimum	NA
Maximum	NA
Waste water flow range:	
Minimum	NA
Maximum	NA
Volume per unit product:	
Minimum	NA
Maximum	NA

Sources of data are Stanford Research Institute, Directory of Chemical Producers, U.S.A., 1979, U.S. Department of Commerce, Current Industrial Reports, December 1977; Energy and Environmental Analysis, Inc.; Draft Report, "Preliminary Economic Assessment of Effluent Limitations in the Inorganic Chemical Industry," June, 1978 and "Economic Analysis of Proposed Revised Effluent Guidelines and Standards for the Inorganic Chemicals Industry," March, 1980

NA= Not Available

Toxic Metals

Data has been received on about 60% of the industry as a result of Section 308 letters. In addition, sampling surveys were made at two plants representing 38% of the industry. Toxic pollutants found during sampling were as follows:

Pollutant	Maximum Concentration Observed µg/l
Copper	31
Zinc	13
Dichlorobromomethane	33
Chloroform	10

These pollutants are at very low concentrations which are far below accepted treatability levels.

Status of Regulations

BPT regulations (40 CFR 415.182) were promulgated on March 12, 1974. These regulations have since been remanded by the court.

BAT and NSPS regulations requiring zero discharge (40 CFR 415.183) were promulgated on March 12, 1974. These regulations have been since remanded by the court. However, it has been determined that the sodium metal subcategory be excluded from BAT and NSPS regulations because data from section 308 letters and sampling surveys indicate that toxic pollutant concentrations are far below accepted treatable levels.

Because no significant quantities of toxic pollutants are present no further effort will be given to development of pretreatment regulations for this subcategory.

26.37 SODIUM SILICATE

Summary of Determinations

It has been determined that no further effort be given to developing BPT, BAT, NSPS, and Pretreatment regulations for the Sodium Silicate Subcategory. The basis for this determination is that the small quantities of toxic pollutants found during screening are below accepted levels of treatability. This subcategory is excluded under paragraph 8 of the Consent Decree.

Production Processes and Effluents

Sodium silicate is manufactured both in liquid and anhydrous powdered form. It has many industrial uses, such as additives in adhesives, flocculants, and cleaning agents. It is also used in the produciton of soap and household detergents. Sources of process waste water include contact cooling water, filter backwash, gas scrubbers and tank cleaning.

The industry profile for this subcategory is given in Table 26.37-1.

Toxic Pollutants

Data has been received on about 63% of the industry as a result of Section 308 letters. In addition, a sampling survey was made at one plant which represents about 6% of the industry. The following pollutants were detected: nickel, copper and zinc. These levels are below accepted treatability levels. In addition, the sampling data was taken from waste waters receiving insufficient treatment. The wastes were ponded to remove suspended solids consiting essentially of sand and other silicates. Normally the pH of the wastes would be lowered to 9 and receive additional settling. However the dissolved silicate and high pH are considered beneficial by sewerage authorities in the removal of solids in primary and secondary settling systems.

Maximum concentrations of toxic pollutants found during sampling are:

Pollutant	(µg/l)
Copper	347
Nickel	121
Zinc	181

Status of Regulations

BPT, BAT, and NSPS regulations (40 CFR 415.192) requiring zero discharge of pollutants were promulgated on March 12, 1974. These regulations have since been remanded by the court and are not in effect.

Because no significant quantities of toxic pollutants are present no further effort will be given to development of pretreatment regulations for this subcategory.

TABLE 26.37-1 - SUBCATEGORY PROFILE DATA SUMMARY

SUBCATEGORY	SODIUM SILICATE	
Total subcategory capacity rate (27 Plants)	927,300	kkg/year
Total subcategory production rate	NA	
Number of plants in this subcategory	39	
308 Data on file for	21	
With total capacity of	NA	
With total production of	431,000	kkg/year
Representing capacity	47	percent
Representing production	NA	
Plant production range:		
Minimum	12,400	kkg/year
Maximum	57,300	kkg/year
Average production	NA	
Median production	NA	
Average capacity utilization	NA	
Plant age range:		
Minimum	7	years
Maximum	43	years
Waste water flow range:		
Minimum	NA	
Maximum	NA	
Volume per unit product:		
Minimum	NA	
Maximum	NA	

Sources of data are Stanford Research Institute, Directory of Chemical Producers, U.S.A., 1979, U.S. Department of Commerce, Current Industrial Reports, December 1977; Energy and Environmental Analysis, Inc.; Draft Report, "Preliminary Economic Assessment of Effluent Limitations in the Inorganic Chemical Industry," June, 1978 and "Economic Analysis of Proposed Revised Effluent Guidelines and Standards for the Inorganic Chemicals Industry," March, 1980

NA = Not Available

26.38 SODIUM SILICOFLUORIDE

Summary of Determinations

This subcategory has been excluded from the present study but will be included in the Phase II, Inorganic Chemicals, review.

Production Processes and Effluents

Sodium silicofluoride is used in the manufacture of sodium fluoride and in the light metal industry as a protective agent. It is also used as and insecticide, as a fluxing and opacity agen agent for ceramics and in detergent products.

The industry profile for this subcategory is given in Table 26.38-1.

26.39 SODIUM SULFITE

Summary of Determinations

It has been determined that no further efforts be given to developing or revising regulations for the Sodium Sulfite Subcategory. The basis for this determination is that there are existing regulations for BAT and NSPS that require zero discharge of process waste water pollutants (40 CFR 415.203 and 415.205). The subcategory is excluded under Paragraph 8 of the Consent Decree. Pretreatment standards will be developed in Phase II.

Production Processes and Effluents

Sodium sulfite is produced by two processes. One is the direct reaction of soda ash with sulfur dioxide. There are four plants manufacturing sodium sulfide using this process. In the other process, sodium sulfite is produced as a by-product in the manufacture of phenol. Since this process is used primarily to produce phenol and its derivatives, it is not considered for this subcategory.

TABLE 26.38-1 - SUBCATEGORY PROFILE DATA SUMMARY

SUBCATEGORY	SODIUM SILICOFLUORIDE
Total subcategory capacity rate	NA
Total subcategory production rate	51,800 kkg/year
Number of plants in this subcategory	6
308 Data on file for	1
With total capacity of	7,460 kkg/year
With total production of	3,970 kkg/year
Representing capacity	NA
Representing production	7.5 percent
Plant production range:	
Minimum	NA
Maximum	NA
Average production	NA
Median production	NA
Average capacity utilization	NA
Plant age range:	
Minimum	NA
Maximum	NA
Waste water flow range:	
Minimum	NA
Maximum	NA
Volume per unit product:	
Minimum	NA
Maximum	NA

Sources of data are Stanford Research Institute, Directory of Chemical Producers, U.S.A., 1977, U.S. Department of Commerce, Current Industrial Reports, December 1977; Energy and Environmental Analysis, Inc.; Draft Report, "Preliminary Economic Assessment of Effluent Limitations in the Inorganic Chemical Industry," June, 1978 and "Economic Analysis of Proposed Revised Effluent Guidelines and Standards for the Inorganic Chemicals Industry," March, 1980

NA = Not Available

26.40 SODIUM THIOSULFATE

Summary of Determinations

It has been determined that no further effort be given to developing BPT, BAT, NSPS, or Pretreatment regulations for the Sodium Thiosulfate Subcategory. The basis for this determination is that no toxic pollutants were found at significant levels in the raw waste during screening of one plant. The subcategory is excluded under Paragraph 8 of the Consent Decree.

Production Processes and Effluents

Most of the sodium thiosulfate is produced by the sulfur-sodium sulfite process. It is used extensively in the development of negatives and prints in the photographic industry. It is also used in medicine, in the paper and dyeing industries, and as a bleaching agent for natural products. Process waste water source include filter backwash and the discharge from barometric condensers.

The subcategory profile data are given in Table 26.40-1.

Toxic Pollutants

Data has been received on about 33 percent of the industry as a result of Section 308 letters. A sampling survey at one plant indicated that toxic pollutants in the effluent are below treatment levels.

Toxic pollutants identified in the effluent were:

Pollutant	Concentration (µg/l)
Copper	91
Zinc	94

Status of Regulations

Subpart BG has been reserved for this subcategory.

26.41 STANNIC OXIDE

Summary of Determinations

It has been determined that no additional effort be given to developing revised BAT, or NSPS regulations for this

TABLE 26.40-1 - SUBCATEGORY PROFILE DATA SUMMARY

SUBCATEGORY	SODIUM THIOSULFATE
Total subcategory capacity rate	NA
Total subcategory production rate	NA
Number of plants in this subcategory	6
308 Data on file for	5
With total capacity of	88,000 kkg/year
With total production of	70,300 kkg/year
Representing capacity	NA
Representing production	NA
Plant production range:	
Minimum	4,400 kkg/year
Maximum	27,000 kkg/year
Average production	NA
Median production	NA
Average capacity utilization	NA
Plant age range:	
Minimum	3 years
Maximum	51 years
Waste water flow range:	
Minimum	NA
Maximum	NA
Volume per unit product:	
Minimum	NA
Maximum	NA

Sources of data are Stanford Research Institute, Directory of Chemical Producers, U.S.A., 1977, U.S. Department of Commerce, Current Industrial Reports, December 1977; Energy and Environmental Analysis, Inc.; Draft Report, "Preliminary Economic Assessment of Effluent Limitations in the Inorganic Chemical Industry," June, 1978 and "Economic Analysis of Proposed Revised Effluent Guidelines and Standards for the Inorganic Chemicals Industry," March, 1980

NA = Not Available

subcategory. The basis for this recommendation is that existing regulation for BPT is zero discharge. Pretreatment standards will be developed in Phase II.

Production Process and Effluents

Tin is reacted with air and oxygen in a furnace to form stannic oxide. The product is recovered with dry bag collectors and packaged for sale. There is no process waste water from this process.

Plants

There are three plants producing stannic oxide.

BPT Limitations

Regulations for BPT were promulgated on May 22, 1975 (40 CFR 415.602) and require zero discharge of process waste water pollutants. The regulations have not been challenged.

BAT and NSPS Limitations

Zero discharge regulations were proposed for BAT and NSPS on May 22, 1975. Since BPT already requires zero discharge, BAT and NSPS are being excluded under Paragraph 8 of the Consent Decree.

26.42 STRONG NITRIC ACID

Summary of Determinations

It has been determined that no further effort be given to developing regulations for the Nitric Acid (Strong) Subcategory. The basis for this determination is that no process related toxic pollutants were found at significant levels in the process waste water during screening of two plants and verification of one plant. The subcategory is excluded under Paragraph 8 of the Consent Decree.

Production Processes and Effluents

Most of the strong nitric acid is produced by dehydration of dilute nitric acid. Strong nitric acid is used in the manufacture of organic compounds where nitric acid acts as an oxiding agent instead of an acid. It is also used in the manufacture of dye intermediates and explosives. The principal waste water source is derived from equipment washing. The industry profile data are given in Table 26.42-1.

TABLE 26.42-1 - SUBCATEGORY PROFILE DATA SUMMARY

SUBCATEGORY	STRONG NITRIC ACID
Total subcategory capacity rate	NA
Total subcategory production rate	NA
Number of plants in this subcategory	NA
308 Data on file for	5
With total capacity of	155,200 kkg/year
With total production of	121,000 kkg/year
Representing capacity	NA
Representing production	NA
Plant production range:	
Minimum	5,300 kkg/year
Maximum	60,200 kkg/year
Average production	NA
Median production	NA
Average capacity utilization	NA
Plant age range:	
Minimum	11 years
Maximum	49 years
Waste water flow range:	
Minimum	NA
Maximum	NA
Volume per unit product:	
Minimum	NA
Maximum	NA

Sources of data are Stanford Research Institute, Directory of Chemical Producers, U.S.A., 1977, U.S. Department of Commerce, Current Industrial Reports, December 1977; Energy and Environmental Analysis, Inc.; Draft Report, "Preliminary Economic Assessment of Effluent Limitations in the Inorganic Chemical Industry," June, 1978 and "Economic Analysis of Proposed Revised Effluent Guidelines and Standards for the Inorganic Chemicals Industry," March, 1980

NA = Not Available

Toxic Pollutants

Toxic pollutants found in the waste streams during sampling of strong nitric acid plants were:

Pollutant	Maximum Concentration Observed (µg/l) Screening (2 Plants)	Verification (1 Plant)
Chromium	40,000	< 50
Zinc	900	120
Lead	70	< 10
Mercury	8.6	1.2
Silver	.69	< 15
Nickel	< 5.0	< 50
Cadmium	< 2.0	< 2.0
Cyanide	.020	< .020

In a follow-up, it was found that the chromium and zinc are used as corrosion inhibitors in the cooling tower, and are not process related. Control of these pollutants should involve best management practices instead of end-of-pipe treatment.

Status of Regulations

Subpart AV has been reserved for this subcategory.

26.43 SULFUR DIOXIDE

Summary of Determinations

It has been determined that no further effort be given to developing BPT, BAT, NSPS, and Pretreatment regulations for the Sulfur Dioxide Subcategory. The basis for this determination is that no toxic pollutants were found at significant levels in the raw waste during screening of one plant. The subcategory should be excluded under Paragraph 8 of the Consent Decree.

Production Processes and Effluents

Most of the sulfur dioxide is produced by air oxidation of sulfur. The major portion of sulfur dioxide production is in the gaseous form, although a small percentage is also produced in liquid form. In the gaseous form, it is predominantly used in on-site manufacture of sulfuric acid. It is also used in the paper and petroleum industries, as well as for fermentation control in the wine industry, for bleaching in the textile and

food industries, and in the production of other chemicals. The waste water source at one plant was a process effluent from an extraction operation.

The subcategory profile data are given in Table 26.43-1.

Toxic Pollutants

Data has been received on about 33 percent of the industry as a result of Section 308 letters. No toxic pollutants were found at significant levels in waste waters during the screening of one sulfur dioxide plant.

Status of Regulations

Subpart BI (40 CFR 415.610, 5/22/75) has been reserved for this subcategory.

26.44 SULFURIC ACID INDUSTRY

Summary of Determinations

It has been determined that no further effort be given to developing BPT, BAT, NSPS, and Pretreatment regulations for the Sulfuric Acid Subcategory. The basis for this determination is that the small quantities of toxic pollutants found during screening are far below accepted treatability levels. This determination applies to the production of sulfuric acid by the contact process from elemental sulfur only. This subcategory is excluded under Paragraph 8 of the Consent Decree.

Production Processes and Effluents

Sulfuric acid is one of the most extensivley used of all manufactured chemicals. The major industrial use is in the fertilizer industry, with on-site captive use of the product as a dominant practice. It is also used in the manufacturing of plastics, explosives, detergents, hydrofluoric acid, nuclear fuel and several other organic and inorganic products. This industry has no process waste water, but does have cooling tower blowdown.

The industry profile data for this subcategory are given in Table 26.44-1.

TABLE 26.43-1 - SUBCATEGORY PROFILE DATA SUMMARY

SUBCATEGORY SULFUR DIOXIDE

Total subcategory capacity rate	NA
Total subcategory production rate	NA
Number of plants in this subcategory	15
308 Data on file for	5
With total capacity of	453,000 kkg/year
With total production of	364,000 kkg/year
Representing capacity	NA
Representing production	NA
Plant production range:	
Minimum	27,800 kkg/year
Maximum	170,000 kkg/year
Average production	NA
Median production	NA
Average capacity utilization	NA
Plant age range:	
Minimum	3 years
Maximum	51 years
Waste water flow range:	
Minimum	NA
Maximum	NA
Volume per unit product:	
Minimum	NA
Maximum	NA

Sources of data are Stanford Research Institute, Directory of Chemical Producers, U.S.A., 1977, U.S. Department of Commerce, Current Industrial Reports, December 1977; Energy and Environmental Analysis, Inc.; Draft Report, "Preliminary Economic Assessment of Effluent Limitations in the Inorganic Chemical Industry," June, 1978 and "Economic Analysis of Proposed Revised Effluent Guidelines and Standards for the Inorganic Chemicals Industry," March, 1980

NA = Not Available

TABLE 26.44-1 - SUBCATEGORY PROFILE DATA SUMMARY

SUBCATEGORY	SULFURIC ACID	
Total subcategory capacity rate	33,619,000	kkg/year
Total subcategory production rate	NA	
Number of plants in this subcategory	109	
308 Data on file for	52	
With total capacity of	7,758,000	kkg/year
With total production of	6,308,000	kkg/year
Representing capacity	23	percent
Representing production	NA	
Plant production range:		
Minimum	5,300	kkg/year
Maximum	47,700	kkg/year
Average production	NA	
Median production	NA	
Average capacity utilization	NA	
Plant age range:		
Minimum	3	years
Maximum	78	years
Waste water flow range:		
Minimum	NA	
Maximum	NA	
Volume per unit product:		
Minimum	NA	
Maximum	NA	

Sources of data are Stanford Research Institute, Directory of Chemical Producers, U.S.A., 1979 , U.S. Department of Commerce, Current Industrial Reports, December 1977; Energy and Environmental Analysis, Inc.; Draft Report, "Preliminary Economic Assessment of Effluent Limitations in the Inorganic Chemical Industry ," June, 1978 and "Economic Analysis of Proposed Revised Effluent Guidelines and Standards for the Inorganic Chemicals Industry," March, 1980

NA = Not Available

Toxic Pollutants

Data has been received on about 21% of the industry as a result of Section 308 letters. In addition a sampling survey was made at one plant which represents less than 1% of the industry. Only nickel and copper were detected but were at levels far below accepted treatability concentrations. They probably result from corrosion and are concentrated by recycling the cooling water. Apart from waterside corrosion some corrosion products results from acid leaks. However, BPT regulations require pH control and this will limit this problem.

Status of Regulations

BPT regulations (40 CFR 415.212) were promulgated on March 12, 1974. These regulations have been remanded by the court.

NSPS and BAT regulations requiring zero discharge (40 CFR 415.212) were promulgated on March 12, 1974. These regulations were subsequently remanded by the court. Because no significant quantities of toxic pollutants are present no further effort will be given to development of pretreatment regulations for this subcategory.

26.45 ZINC OXIDE

Summary of Determinations

It has been determined that no further effort be given to developing BAT, NSPS, or pretreatment regulations for the Zinc Oxide Subcategory. The bases for this determination are 1) only one plant exists the generates process liquid effluents from the manufacture of zinc oxide using the wet chemical process, and 2) processes using oxidation of zinc produce no waterborne wastes. The subcategory is excluded under Paragraph 8 of the Consent Decree.

Production Processes and Effluents

Two major processes are used for the manufacture of zinc oxide: 1) those involving oxidation of zinc, and 2) those involving precipitation from solution followed by calcination. Two methods are used to prepare zinc oxide using the oxidation process--the American Process and the French Process.

In the American Process, zinc ore is dried and converted to crude oxide by roasting at approximately 1000 degrees C. Zinc sinter is introduced into a reaction kiln with equal amounts of coke. The zinc vapor and carbon monoxide formed are oxidized to zinc oxide and carbon dioxide and drawn off through

ducts to cyclone and baghouse collection equipment. No waterborne wastes are generated.

In the French Process, crude zinc oxide sinter and dried coke are mixed with binder and fed through briquetting rolls. The raw briquettes are fed into cokers operating at temperatures between 500 and 1000 degrees C. Zinc sinter is converted to zinc metal in vapor using electrical ore vaporizers or rotary burners. The zinc vapors are purified to remove lead and cadmium impurities. The purified zinc is then vaporized and reacted with oxygen to produce zinc oxide, which is recovered by dry collection methods, cooled, and packaged. No waterborne wastes are generated.

In the wet chemical process, crude zinc oxide recovered from lead smelters is used as the raw material. The zinc oxide is leached with caustic soda solution to remove sulfate and dissolve lead salts. The undissolved zinc oxide is then recovered from the leaching mixture washed, and neutralized to remove alkali, dried, calcined, and packaged. Waterborne wastes are generated from the deleading step, desulfating step, etc.

Plants

There are about 20 zinc oxide producers in the United States. The producers include both primary and secondary. The final product of the primary producers is zinc oxide, while the secondary producers manufacture zinc oxide and use it to make other products including zinc sulfate, zinc acetate, zinc chloride, and zinc nitrate. About 80-90 percent of the total zinc oxide produced is made by the American and French Processes, and 10 percent is made by one plant using the wet chemical process.

26.46 ZINC SULFATE

Summary of Determinations

It has been determined that no further effort be given to developing revised BAT or NSPS regulations for the Zinc Sulfate Subcategory. The basis for this determination is that existing BPT regulations specify zero discharge of process waste waters to navigable waters. Pretreatment standards will be developed in Phase II.

Production Processes and Effluents

Zinc sulfate is produced by reaction of sulfuric acid with various crude zinc starting materials, such as zinc oxide from brass mill fumes, zinc metal residues from various sources, and

zinc carbonate by-product from sodium hydrosulfite manufacture. The following basic steps are followed: reaction of the zinc containing raw material with refiltration of solids, and either evaporation to dryness or sale as solution grade. Liquors from the preceding processes are, in some cases, refined to recover by-products and other waste waters are recycled. The only wastes are filter cake residues.

Plants

There are eighteen plants producing zinc sulfate and none are known to discharge wastes from the process system.

BPT Limitations

Regulations were promulgated on May 22, 1975 (40 CFR 415.632) requiring no discharge of process waste water pollutants to navigable waters. The discharge of contaminated non-process waste water is permitted. This includes rainfall runoffs, accidental spills, accidental leaks, and discharges related to personal safety equipment. All reasonable measures must be taken to prevent, reduce and control such contact to the maximum degree feasible, and to mitigate the effects of such contact once it has occurred.

BAT and NSPS Limitations

BAT and NSPS guidelines were proposed on May 22, 1975, requiring zero discharge of process wastes to navigable waters. Since BPT already requires zero discharge, BAT and NSPS are excluded under Paragraph 8 of the Consent Decree.

REFERENCES

1. U.S. Environmental Protection Agency. Major Inorganic Products, Development Document. EPA-440/1-74-007a, 1974.

2. U.S. Environmental Protection Agency. Development Document for Interim Final Effluent Limitations Guidelines and Proposed New Source Performance Standards for the Significant Inorganic Products. EPA-440/1-75-037, 1975. 358 Pp.

3. Calspan Corp. Addendum to Development Document for Effluent Limitations Guidelines and New-Source Performance Standards. Major Inorganic Products Segment of Inorganic Chemicals Manufacturing Point Source Category. Contract No. 68-01-3281, 1978.

4. Sampling Screening Procedure for the Measurement of Priority Pollutants. U.S. Environmental Protection Agency, 1976. 6 Pp.

5. Coleman, R.T., J.D. Colley, R.F. Klausmeiser, D.A. Malish, N.P. Meserole, W.C. Micheletti, and K. Schwitzgebel. Treatment Methods for Acidic Wastewater Containing Potentially Toxic Metal Compounds. EPA Contract No. 68-02-2608, U.S. Environmental Protection Agency, 1978. 220 Pp.

6. Kraus, K.A., and H.O. Phillips. Processes for Removal and/or Separation of Metals from Solutions. U.S. Patent 3,317,312, U.S. Patent Office, May 2, 1967. 9 Pp.

7. Scott, M.C. Heavy Metals Removal at Phillips Plating. WWEMA Industrial Pollution Conference, St. Louis, Missouri, 1978. 16 Pp.

8. Scott, M.C. Sulfex™ - A New Process Technology for Removal of Heavy Metals from Waste Streams. The 32nd Annual Purdue Industrial Waste Conference, Lafayette, Indiana, 1977. 17 Pp.

9. Patterson, J.W., and R.A. Minear. Wastewater Treatment Technology. Illinois Institute of Technology, 1973.

10. Patterson, J.W. Wastewater Treatment Technology. Ann Arbor Science Publishers, Inc. Ann Arbor, Michigan, 1975.

REFERENCES -Continued

11. Schlauch, R.M., and A.C. Epstein. Treatment of Metal Finishing Wastes by Sulfide Precipitation. EPA-600/2-75-049, U.S. Environmental Protection Agency, 1977. 89 Pp.

12. Campbell, H.J., Jr., N.C. Scrivner, K. Batzar, and R.F. White. Evaluation of Chromium Removal from a Highly Variable Wastewater Stream. The 32nd Annual Purdue Industrial Waste Conference, Lafayette, Indiana, 1977. 38 Pp.

13. Wing, R.E., C.L. Swanson, W.M. Doane, and C.R. Russell. Heavy Metal Removal with Starch Xanthate-Cationic Polymer Complex. J. Water Pollution Control Federation, 46 (8): 2043-2047, 1974.

14. Wing, R.E. Heavy Metal Removal from Wastewater with Starch Xanthate. In: Proceedings of the 29th Annual Purdue Industrial Waste Conference, Lafayette, Indiana, 1974. Pp. 348-356.

15. Wing, R.E. Removal of Heavy Metals from Wastewater with a Starch Xanthate-Cationic Polymer Complex. The 46th Annual Conference of the Water Pollution Control Federation, Cleveland, Ohio, 1973. 38 Pp.

16. Wing, R.E. Removal of Heavy Metals from Wastewater with Starch Xanthate. Presented at the Traces of Heavy Metals in Water: Removal and Monitoring Conference, Princeton, New Jersey, 1973. Pp. 258-273.

17. Swanson, C.L., R.E. Wing, W.M. Doane, and C.R. Russell. Mercury Removal from Waste Water with Starch Xanthate Cationic Polymer Complex. Environmental Science & Technology 7(7):614-619, 1973.

18. Hanway, J.E., Jr., R.G. Mumford, and D.G. Barth. A Promising New Process for Removing Heavy Metals from Wastewater. Civil Engineering-ASCE 47(10):78-79, 1976.

19. Hanway, J.E., Jr., R.G. Mumford, and P.N. Mishra. Treatment of Industrial Effluents for Heavy Metals Removal Using the Cellulose Xanthate Process. The 71st Annual Meeting of the American Institute of Chemical Engineers, Miami, Florida, 1978. 21 Pp.

20. Wing, R.E., L.L. Navickis, B.K. Jasberg, and W.E. Rayford. Removal of Heavy Metals from Industrial Wastewaters Using Insoluble Starch Xanthate. EPA-600/2-78-085, U.S. Environmental Protection Agency, 1978. 116 Pp.

REFERENCES - Continued

21. De Jong, G.J., and Ir. C.J.N. Rekers. The Akzo Process for the Removal of Mercury from Waste Water. Journal of Chromatography 102: 443-451, 1974.

22. Van der Heem, P. The Removal of Traces of Heavy Metals from Drinking Water and Industrial Effluent with Ion Exchangers. The Regional American Chemical Society Meeting, 1977. 16 Pp.

23. Chemical Marketing Recorder, July 24, 1978.

24. Slen, T.T., M. Chem, and J. Lauber. Incineration of Toxic Chemical Wastes. Pollution Engineering 10(10):42, 1978.

25. TRW Systems Group. Recommended Methods of Reduction, Neutralization, Recovery or Disposal of Hazardous Waste. NTIS PB-224589, 1973.

26. Ellerbusch, F., and H.S. Skrovronek. Oxidative Treatment of Industrial Wastewater. Industrial Water Engineering 14(5):20-29, 1977.

27. Knopp, P.V., and T.L. Randall. Detoxification of Specific Organic Substances by Wet Oxidation. The 51st Annual Conference of Water Pollution Control Federation, 1978.

28. Arthur D. Little, Inc. Treatment Technology Handbook.

29. Schell, W.J. Membrane Ultrafiltration for Water Treatment. Envirogenics Systems Co.

30. Vanderborght, B.M., and R.E. Van Grieken. Enrichment of Trace Metals in Water by Adsorption on Activated Carbon. Analytical Chemistry 49(2):311-316, 1977.

31. Cheremisinoff, P.N., and F. Ellerbusch. Carbon Adsorption Handbook. Ann Arbor Science Publishers, Inc., Ann Arbor Michigan, 1978.

32. Jacobs Engineering Group Inc. Study of the Application of BAC to Industrial Waste Water. Office of Water Research and Technology, U.S. Environmental Protection Agency, 1978.

33. Otsubo, K., S. Yamazaki, and Y. Sakuraba. Advanced Water Treatment for Fluoride-Containing Waste Water. Hitachi Hyoron 58(3):219-224, 1976. Trans. For Rockwell Intl.

34. Zabban, W., and H.W. Jewett. The Treatment of Fluoride Wastes. In: Proceedings of the 22nd Annual Purdue Industrial Waste Conference, Lafayette, Indiana, 1967. Pp. 706-716.

35. Rubel, F., Jr., and R.D. Woosley. Removal of Excess Fluoride from Drinking Water. EPA-570/9-78-001. U.S. Environmental Protection Agency, 1978. 16 Pp.

36. Wu, Y.C. Activated Alumina Removes Fluoride Ions From Water. Water and Sewage Works 125(6):76-82, 1978.

37. Maier, F.J. Partial Defluoridation of Water. Public Works 91(11), 1960.

38. Maier, F.J. New Fluoride Removal Method Cuts Costs. Engineering News-Record 148(24):40, 1952.

39. Kennedy, D.C., M.A. Kimler, and C.A. Hammer. Functional Design of a Zero-Discharge Wastewater Treatment System for the National Center for Toxicological Research. In: Proceedings of the 31st Annual Purdue Industrial Waste Conference, Lafayette, Indiana, 1976. Pp. 823-830.

40. Hannah, S.A., M. Jelus, and J.M. Cohen. Removal of Uncommon Trace Metals by Physical and Chemical Treatment Processes. Journal Water Pollution Control Federation 49(11):2297-2309, 1977.

41. Maruyama, T., S.A. Hannah, and J.M. Cohen. Metal Removal by Physical and Chemical Treatment Processes. Journal Water Pollution Control Federation 47(5):962-975, 1975.

42. Gulledge, H.H., and J.T. O'Connor. Removal of Arsenic (V) from Water by Adsorption on Aluminum and Ferric Hydroxides. Journal American Water Works Association 65(8):548-552, 1973.

43. Gupta, S., and K.Y. Chen. Arsenic Removal by Adsorption. Journal Water Pollution Control Federation 50(3):493, 1978.

44. Larsen, H.P., J.K. Shou, and L.W. Ross. Chemical Treatment of Metal-Bearing Mine Drainage. Journal Water Pollution Control Federation 45(8):1682-1695, 1973.

45. Nilsson, R. Removal of Metals by Chemical Treatment of Municipal Waste Water. Water Research 5:51-60, 1971.

46. Sorg, T.J., O.T. Love, and G.S. Logsdon. Manual of Treatment Techniques for Meeting the Interim Primary Drinking Water Regulations. EPA-600/8-77-005. U.S. Environmental Protection Agency, 1977. 73 Pp.

47. Colley, J.D., C.A. Muela, M.L. Owen, N.P. Meserole, J.B. Riggs, and J.C. Terry. Assessment of Technology for Control of Toxic Effluents from the Electric Utility Industry. EPA-600/7-78-090. U.S. Environmental Protection Agency, 1978.

48. Smithson, G.R., Jr. An Investigation of Techniques for Removal of Chromium from Electroplating Wastes. EPA 12010 EIE. U.S. Environmental Protection Agency, 1971, 91 pp.

49. Patterson, J.W., H.E. Allen, and J.J. Scala. Carbonate Precipitation for Heavy Metals Pollutants. Journal Water Pollution Control Federation 49(12):2397-2410, 1977.

50. Sabadell, J.E. Traces of Heavy Metals in Water Removal Processes and Monitoring. EPA-902/9-74-001. U.S. Environmental Protection Agency, 1973.

51. U.S. Environmental Protection Agency. Environmental Multi-Media Assessment of Selected Industrial Inorganic Chemicals. EPA Contract No. 68-03-2403, 1977.

52. JRB Associates, Inc. An Assessment of pH Control of Process Waters in Selected Plants. Draft Report to the Office of Water Programs, U.S. Environmental Protection Agency, 1979.

53. Energy and Environmental Analysts, Inc. Economic Analysis of Proposed Revised Effluent Guidelines and Standards for the Inorganic Chemicals Industry. Prepared for Office of Water Planning and Standards, U.S. Environmental Protection Agency, 1980.

54. Kirsch, E.J., and J.E. Etzel, J. Water Pollution Control Federation, Vol. 45, 359, 1973.

55. E.I. DuPont de Nemours & Company, Development Document for Effluent Limitations Guidelines and New Source Performance Standards for Simultaneous Beneficiation-Chlorination Process of TiO2 Manufacture, Pigments Department, Edge Moor, Delaware, 1977.

56. U.S. Environmental Protection Agency, Proceedings: Seminar on Analytical Methods for Priority Pollutants, Denver, 1977.

57. SRI International, Report No. 61B, Chlorine, Supplement B, by Yen-Chen Yen, (a private report by the Process Economics Program), Menlo Park, California, 1978.

REFERENCES - Continued

58. U.S. Environmental Protection Agency, Development Document for Proposed Effluent Limitations Guidelines, New Source Performance Standards and Pretreatment Standards for the Steam Electric Point Source Cateogory, (Effluent Guidelines Division, Office of Water and Waste Management, Washington, D.C.), 1979.

59. U.S. Environmental Protection Agency, Quality Criteria for Water, (EPA-44/9-76-023), Washington, D.C., 1976.

BIBLIOGRAPHY

Andco Environmental Processes, Inc. Andco Chromate and Heavy Metal Removal System. 1977

Anderson, J.R., and C.O. Weiss. Method for Precipitation of Heavy Metal Sulfides. U.S. Patent 3,740,331. U.S. Patent Office. June 19, 1973.

Birkett, J.D. Electrodialysis - An Overview. Industrial Water Engineering 14(5):6-9, 1977.

Bowen, L.B., J.H. Mallinson, and J.H. Cosgrove. Waste Recovery: Zinc Recovery from Rayon Plant Sludge. Chemical Engineering Progress 73(5):50-54, 1977.

Case, O.P. Metallic Recovery from Waste Waters Utilizing Cementation. EPA 670/2-74-008. U.S. Environmental Protection Agency, 1974. 36 Pp.

Cheng, M.H., J.W. Patterson, and R.A. Minear. Heavy Metals Uptake by Activated Sludge. Journal Water Pollution Conrol Federation 47(2):362-376, 1975.

Cheremisinoff, P.N., and Y.H. Habib. Cadmium, Chromium, Lead, Mercury: A Plenary Account for Water Pollution. Part 2 Removal Techniques. Water and Sewage Works 119(8):46-51, 1972.

Cohen, J.M. Trace Metal Removal by Wastewater Treatment. EPA Technology Transfer, 1977.

Current Industrial Reports Inorganic Chemicals. U.S. Department of Commerce Bureau of the Census, 1977.

Davis, H.J., F.S. Model, and J.R. Leal. PBI Reverse Osmosis Membrane for Chromium Plating Rinse Water. EPA-600/2-78-040. U.S. Environmental Protection Agency, 1978. 35 Pp.

Dean, J.G., F.L. Bosqui, and K.H. Lanouette. Removing Heavy Metals from Waste Water. Environmental Science and Technology 6(6):518-522, 1972.

Dow Chemical Company. Selecting Ion Exchange Resins for Water Treatment Applications. Industrial Water Engineering 14(5): 11-13, 1977.

Energy and Environmental Analysis, Inc. Draft Preliminary Economic Assessment of Effluent Limitations in the Inorganic Chemicals Industry. 1978.

FMC Corp. Industrial Wastewater Treatment. A guidebook to Hydrogen Peroxide for Industrial Wastes. Philadelphia, Pennsylvania.

FMC Corp. Hydrogen Peroxide. Chemical and Technical Data. Philadelphia, Pennsylvania.

Ford, D.L. Putting Activated Carbon in Perspective to 1983 Guidelines. Industrial Water Engineering 14(3):20-27, 1977.

General Technology Corporation. Draft Contractor Document for Major Inorganic Chemicals. 1973.

General Technology Corporation. Final Contractor Document for Major Inorganic Chemicals. 1975.

Greek, B.F., and W.F. Fallwell. Chlorine, Major Alkalies Still in Doldrums. Chemical and Engineering News 56(6):8-11, 1978.

Grover, P. A Waste Stream Management System. Chemical Engineering Progress 73(12):71-73, 1977.

Haggenmacher, J.H. Chromate Removal Decreases Blowdown to Below 0.05 ppm Hexavalent Chrome. Chemical Processing, 1977.

Hoyle, D.L. Designing for pH Control. Chemical Engineering 83(24):121-126, 1976.

Jacobs Engineering Group Inc. Estimating Standards

Jenkins, S.H., D.G. Keight, and R.E. Humphreys. The Solubility of Heavy Metal Hydroxides in Water, Sewage and Sewage Sludge - I The Solubility of Some Metal Hydroxides. Int. J. Air Wat. Poll. 8:537-556, 1964.

Jenkins, S.H., D.G. Keight, and A. Ewins. The Solubility of Heavy Metal Hydroxides in Water, Sewage, and Sewage Sludge - II The Precipitation of Metals by Sewage. Int. J. Air Wat. Poll. 8:679-693, 1964.

Keating, E.J., R.A. Brown, and E.S. Greenberg. Phenolic Problems Solved with Hydrogen Peroxide Oxidation. The 33rd Annual Industrial Waste Conference, West Lafayette, Indiana, 1978. 20 Pp.

BIBLIOGRAPHY - Continued

Kibble, W.H. Hydrogen Peroxide Helps Solve Industrial Wastewater Problems. Industrial Wastes 26-29, 1978.

Knocke, W.R., T. Clevenger, M.M. Ghosh, and J.T. Novak, Recovery of Metals from Electroplating Wastes. The 33rd Annual Industrial Waste Conference, West Lafayette, Indiana. 1978. 37 Pp. Lancuette, K.H. Heavy Metals Removal. Chemical Engineering Deskbook Issue 84(22):73-80, 1977.

Linstedt, K.D., C.P. Houck, and J.T. O'Connor. Trace Element Removals in Advanced Wastewater Treatment Processes. Journal Water Pollution Control Federation 43(7):1507-1513, 1971.

Mir, L., W. Eykamp, and R.L. Goldsmith. Current and Developing Applications for Ultrafiltration. Industrial Water Engineering 14(3):14-19, 1977.

Morton, S.D., and E.W. Sawyer. Clay Minerals Remove Organics, Viruses and Heavy Metals from Water. Water and Sewage Works 123 (Reference No. 1976):R117-R120, 1976.

Porter, J.W., Brothers, G.W., and W.B. Whitton. Cost Estimating Guidelines for Wastewater Treatment Systems. EPA 17090 DRU. U.S. Environmental Protection Agency, 1970. 96 Pp.

Resources Conservation Co. The RCC Brine Concentrator. Renton, Washington.

Richardsons Estimating Standards. Means Cost Data. 1978.

Rizzo, J.L., and A.R. Shepherd. Treating Industrial Wastewater with Activated Carbon. Chemical Engineering 84(1):95-100, 1977.

Rosenzweig, M.D. Mercury Cleanup Routes - I Chemical Engineering 82(2):60-61, 1975.

Sabadell, J.E., ed. Traces of Heavy Metals in Water Removal Processes and Monitoring. EPA-902/9-74-001. U.S. Environmental Protection Agency, 1973. 342 Pp.

Shen, Y.S. Study of Arsenic Removal from Drinking Water. Water Journal American Water Works Association 65(8): 543-548, 1973.

Sigworth, E.A., and S.B. Smith. Adsorption of Inorganic Compounds by Activated Carbon. Journal American Water Works Association 64(6):386-390, 1972.

Smith, R. Cost of Conventional and Advanced Treatment of Wastewater. Journal Water Pollution Control Federation 40(9):1546-1574, 1968.

BIBLIOGRAPHY - Continued

Sonksen, M.K., F.M. Sittig, E.F. Maziarz. Treatment of Oily Wastes by Ultrafiltration/Reverse Osmosis. A Case History. The 33rd Annual Industrial Waste Conference, West Lafayette, Indiana, 1978. 28 Pp.

Stanford Research Institute. Directory of Chemical Producers U.S.A. 1977.

Stinson, G.F. Electrochemical Wastewater Treatment Process. Personal Communication. 1978.

Thiem, L.D. Badorek, and J.T. O'Connor. Removal of Mercury From Drinking Water Using Activated Carbon. Journal American Water Works Association 68(8):447-451, 1976.

Thompson, G.S. Jr. First Annual Conference on Advanced Pollution Control for the Metal Finishing Industry. EPA600/8-78-010. U.S. Environmental Protection Agency, 1978. 143 Pp.

S.K. Williams Company. Waste Water Treatment and Reuse in a Metal Finishing Job Shop. EPA-670/2-74-042. U.S. Environmental Protection Agency, 1974. 67 Pp.

Wiseman, S., and B.T. Bawden. Removing Refractory Compounds From Waste Water. Chemical Engineering Progress 73(5):60-64, 1977.

Zabban, W., and R. Helwick. Defluoridation of Wastewater. The 30th Annual Industrial Waste Conference, West Lafayette, Indiana, 1975. 38 Pp.

Zievers, J.F., R.E. Wing, S. Crain, and D. Gordon. Practical Use of Starch Insoluble Xanthates. Industrial Filter and Pump Mfg. Co. 1977. 20 Pp.

APPENDIX A
ANALYSIS OF LONG-TERM EFFLUENT MONITORING DATA FOR THE INORGANIC CHEMICALS INDUSTRY

INTRODUCTION

This appendix contains tabulated summaries of the statistical parameters derived from the analysis of long-term effluent monitoring data collected by industry and reported to the EPA or state regulatory agencies during the last two or three years. The particular sets of data selected for analysis are taken from plants which apply a well defined treatment technology to process waste waters from single product or product group manufacturing operations associated with a specific subcategory. Data have been excluded which represent waste waters diluted with noncontact cooling water or commingled with waste sources from unrelated products. Each table in the appendix indicates the actual number of observations on which the calculated statistical parameters are based. The derivation of the parameters was discussed in Section 8.2 of the development document.

The statistical performance information presented here was used to develop the proposed limitations for each subcategory considered in detail in the main report. These were expressed as the Concentration Bases (mg/l) and Effuent Limits (kg/kkg) for each pollutant assuming the model plant flow conditions and applying the specified pollutant removal technologies at each level of treatment. The tables on the following pages summarize the available historical effluent monitoring results and give the individual plant performance characteristics in concentration and loading units for both daily and monthly measurements. Variability factors shown on each table were used to calculate the plant "Performance Standards" shown in the right hand column of each table. Similarly, the Variability Factor Ratio (VFR) used to calculate the subcategory Proposed Limitations is the variability factor for daily measurements divided by variability factor for 30-day average data.

In general, the monitoring time period for most firms doing so for NPDES permits was from January 1, 1975 through June 30,

1976. Firms who monitored over this time period provided up to 18 months of 30-day average data and as many as 547 measurements of daily or 24-hour data. In cases where monitoring was done less frequently than daily, perhaps omitted on weekends, or only weekly measurements, the actual number of observations used in the calculation is recorded for each parameter.

Included in Appendix A are statistical measures appropriate to the analysis of long-term monitoring data and the historical performance of inorganic chemical pollutant discharge levels. The statistics presented include measures or amount of level of pollutant discharge, such as long-term average, minimum level, and maximum level for both daily, or 24-hour measurements, as well as 30-day average measurements.

Also given in the table is the coefficient of variation, CV, which reflects the dispersion of measurements above and below the long-term average level. Other measures of variability that may be of interest, such as range or standard deviation are also calculated for any parameter from any information given herein. In addition to statistics of pollutant level and variation of pollutant level, variability factors are given for each parameter. A variability factor is the ratio of an upper percentile of the distribution of pollutant measurements to the long-term average pollutant level. The basis of the particular upper percentile chosen for variability factors is explained as a footnote to the table.

The historical performance of each firm, using the variabiity factor, is given for each parameter and is expressed in the same units as the long-term average.

For reference, the tables in Appendix A are organized by inorganic chemical subcategory and the manufacturing process in that subcategory. For each plant, as many as six tables are included. These tables appear in the following order.

1. Daily measurements of pollutant concentrations in effluent stream given in parts per million (ppm).

2. Daily measurements of total effluent discharge load measured in kilograms per day.

3. 30-day averages of pollutant concentration (ppm).

4. 30-day averages of total effluent pollutant load (kg/day).

5. Daily measurements of pollutant unit loadings in the effluent streams given in kilograms of pollutant per thousand kilograms of product (kg/kkg).

6. 30-day averages of pollutant unit loadings in the effluent stream given in kilograms of pollutant per thousand kilograms of product (kg/kkg).

Table A-1a

Historical Effluent Monitoring Data Summary
with Variability Factors and Performance Standards
Daily Measurements
Subcategory Chlorine
Mercury Cell Process
Plant #A

Parameter	Historical Summary Statistics					Variability Factors	Performance Standards
(mg/l)	No	Min	Avg	Max	CV	*	P
Mercury	530	.006	.014	.021	.286	1.88	.026
TSS	530	1.00	7.4	62.	.581	3.04	22.5
Chlorine (Total Residual)	428	0.08	.638	1.50	.463	2.28	1.46

* - 99% of the daily maximum measurements expected to be less than the performance standard, P.

Table A-1b
Historical Effluent Monitoring Data Summary
with Variability Factors and Performance Standards
Daily Measurements
Subcategory Chlorine
Mercury Cell Process
Plant #A

Parameter	Historical Summary Statistics					Variability Factors	Performance Standards
(kg/day)	No	Min	Avg	Max	CV	*	P
Mercury	530	.015	.031	.047	.129	1.66	.051
Chlorine (Total Residual)	420	.156	1.44	3.40	.463	2.54	3.65

* - 99% of the daily maximum measurements expected to be less than the performance standard, P.

Table A-1c

Historical Effluent Monitoring Data Summary
with Variability Factors and Performance Standards
30 Day Averages
Subcategory Chlorine
Mercury Cell Process
Plant #A

Parameter	Historical Summary Statistics					Variability Factors	Performance Standards
(mg/l)	No	Min	Avg	Max	CV	*	P
Mercury	18	.008	.014	.020	.293	1.47	.021
TSS	18	5.1	7.4	12.9	.355	1.58	11.7
Chlorine (Total Residual)	18	.380	.638	.847	.194	1.38	0.88

* - 95% of the monthly averages are expected to be within the performance standard, P.

Table A-1d

Historical Effluent Monitoring Data Summary
with Variability Factors and Performance Standards
30 Day Averages
Subcategory Chlorine
Mercury Cell Process
Plant #A

Parameter	Historical Summary Statistics					Variability Factors	Performance Standards
(kg/day)	No	Min	Avg	Max	CV	*	P
Mercury	18	.020	.031	.037	.197	1.33	.041
Chlorine	18	.91	1.44	2.23		1.50	2.16

* - 95% of the monthly averages are expected to be within the performance standard, P.

Table A-1e

Historical Effluent Monitoring Data Summary
with Variability Factors and Performance Standards
Daily Measurements
Subcategory Chlorine
Mercury Cell Process
Plant #A

Parameter	Historical Summary Statistics					Variability Factors	Performance Standards
(g/kkg)	No	Min	Avg	Max	CV	*	P
Mercury	530	.027	.055	.084			.090
Chlorine (Total Residual)	420	.00028	.0026	.006			.006

* - 99% of the daily maximum measurements expected to be less than the performance standard, P.

Table A-1f

Historical Effluent Monitoring Data Summary
with Variability Factors and Performance Standards
30 Day Averages
Subcategory Chlorine
Mercury Cell Process
Plant #A

Parameter	Historical Summary Statistics					Variability Factors	Performance Standards
(g/kkg)	No	Min	Avg	Max	CV	*	P
Mercury	18	.035	.055	.065			.072
Chlorine	18	1.6	2.52	3.91			3.8

* - 95% of the monthly averages are expected to be within the performance standard, P.

Table A-2a

Historical Effluent Monitoring Data Summary
with Variability Factors and Performance Standards
Daily Measurements
Subcategory Chlorine
Mercury Cell Process
Plant #B

Parameter	Historical Summary Statistics					Variability Factors	Performance Standards
(ug/l)	No	Min	Avg	Max	CV	*	P
Mercury	516	.041	.634	2.87	.910	4.52	2.87

* - 99% of the daily maximum measurements expected to be less than the performance standard, P.

Table A-2b

Historical Effluent Monitoring Data Summary
with Variability Factors and Performance Standards
Daily Measurements
Subcategory Chlorine
Mercury Cell Process
Plant #B

Parameter	Historical Summary Statistics					Variability Factors	Performance Standards
(kg/day)	No	Min	Avg	Max	CV	*	P
Mercury	516	.0005	.011	.088	.818	4.35	.046

* - 99% of the daily maximum measurements expected to be less than the performance standard, P.

Table A-2c

Historical Effluent Monitoring Data Summary
with Variability Factors and Performance Standards
30 Day Averages
Chlorine Subcategory
Mercury Cell Process
Plant #B

Parameter	Historical Summary Statistics					Variability Factors	Performance Standards
(ug/l)	No	Min	Avg	Max	CV	*	P
Mercury	17	.325	.634	1.15	.293	1.45	0.919

* - 95% of the monthly averages are expected to be within the performance standard, P.

Table A-2d

Historical Effluent Monitoring Data Summary
with Variability Factors and Performance Standards
30 Day Averages
Subcategory Chlorine
Mercury Cell Process
Plant #B

Parameter	Historical Summary Statistics					Variability Factors	Performance Standards
(kg/day)	No	Min	Avg	Max	CV	*	P
Mercury	17	.005	.011	.019		1.45	.015

* - 95% of the monthly averages are expected to be within the performance standard, P.

Table A-2e

Historical Effluent Monitoring Data Summary
with Variability Factors and Performance Standards
Daily Measurements
Subcategory Chlorine
Mercury Cell Process
Plant #B

Parameter	Historical Summary Statistics					Variability Factors	Performance Standards
(g/kkg)	No	Min	Avg	Max	CV	*	P
Mercury	516	.0037	.082	.658			.344

* - 99% of the daily maximum measurements expected to be less than the performance standard, P.

Table A-2f

Historical Effluent Monitoring Data Summary
with Variability Factors and Performance Standards
30 Day Averages
Subcategory Chlorine
Mercury Cell Process
Plant #B

Parameter	Historical Summary Statistics					Variability Factors	Performance Standards
(g/kkg)	No	Min	Avg	Max	CV	*	P
Mercury	17	.037	.082	.14			.11

* - 95% of the monthly averages are expected to be within the performance standard, P.

Table A-3a

Historical Effluent Monitoring Data Summary
with Variability Factors and Performance Standards
Daily Measurements
Subcategory Chlorine
Mercury Cell Process
Plant #C

Parameter	Historical Summary Statistics					Variability Factors	Performance Standards
(mg/l)	No	Min	Avg	Max	CV	*	P
Mercury	349	.0005	.014	.136	2.29	9.45	0.132

* - 99% of the daily maximum measurements expected to be less than the performance standard, P.

Table A-3b

Historical Effluent Monitoring Data Summary
with Variability Factors and Performance Standards
Daily Measurements
Subcategory Chlorine
Mercury Cell Process
Plant #C

Parameter	Historical Summary Statistics					Variability Factors	Performance Standards
(kg/day)	No	Min	Avg	Max	CV	*	P
Mercury	349	.0001	.003	.088	2.33	10.22	.028

* - 99% of the daily maximum measurements expected to be less than the performance standard, P.

Table A-3c

Historical Effluent Monitoring Data Summary
with Variability Factors and Performance Standards
30 Day Averages
Subcategory Chlorine
Mercury Cell Process
Plant #C

Parameter	Historical Summary Statistics					Variability Factors	Performance Standards
(mg/l)	No	Min	Avg	Max	CV	*	P
Mercury	17	.0009	.014	.062	1.21	2.99	.042

* - 95% of the monthly averages are expected to be within the performance standard, P.

Table A-3d

Historical Effluent Monitoring Data Summary
with Variability Factors and Performance Standards
30 Day Averages
Subcategory Chlorine
Mercury Cell Process
Plant #C

Parameter	Historical Summary Statistics					Variability Factors	Performance Standards
(kg/day)	No	Min	Avg	Max	CV	*	P
Mercury	17	.0002	.003	.014	1.33	3.22	.0088

* - 95% of the monthly averages are expected to be within the performance standard, P.

Table A-3e

Historical Effluent Monitoring Data Summary
with Variability Factors and Performance Standards
Daily Measurements
Subcategory Chlorine
Mercury Cell Process
Plant #C

Parameter	Historical Summary Statistics					Variability Factors	Performance Standards
(g/kkg)	No	Min	Avg	Max	CV	*	P
Mercury	349	.0006	.017	.485			.154

* - 99% of the daily maximum measurements expected to be less than the performance standard, P.

Table A-3f

Historical Effluent Monitoring Data Summary
with Variability Factors and Performance Standards
30 Day Averages
Subcategory Chlorine
Mercury Cell Process
Plant #C

Parameter	Historical Summary Statistics					Variability Factors	Performance Standards
(g/kkg)	No	Min	Avg	Max	CV	*	P
Mercury	17	.0011	.016	.077			.0485

* - 95% of the monthly averages are expected to be within the performance standard, P.

Table A-4a

Historical Effluent Monitoring Data Summary
with Variability Factors and Performance Standards
Daily Measurements
Subcategory Chlorine
Mercury Cell Process
Plant #D

Parameter	Historical Summary Statistics					Variability Factors	Performance Standards
(mg/l)	No	Min	Avg	Max	CV	*	P
Mercury	82	.002	.004	.011	.500	2.24	0.009
Chlorine (Total Residual)	49	2.0	19.1	62	1.01	4.96	94.7

* - 99% of the daily maximum measurements expected to be less than the performance standard, P.

Table A-4b

Historical Effluent Monitoring Data Summary
with Variability Factors and Performance Standards
Daily Measurements
Subcategory Chlorine
Mercury Cell Process
Plant #D

Parameter	Historical Summary Statistics					Variability Factors	Performance Standards
(kg/day)	No	Min	Avg	Max	CV	*	P
Mercury	82	.021	.047	.118	.383	2.20	.104
Chlorine (Total Residual)	49	20.5	203	663	1.03	5.04	1026

* - 99% of the daily maximum measurements expected to be less than the performance standard, P.

Table A-4c

Historical Effluent Monitoring Data Summary
with Variability Factors and Performance Standards
30 Day Averages
Subcategory Chlorine
Mercury Cell Process
Plant #D

Parameter	Historical Summary Statistics					Variability Factors	Performance Standards
(mg/l)	No	Min	Avg	Max	CV	*	P
Mercury	22	.003	.004	.008	.250	1.60	0.006
Chlorine (Total Residual)	14	4.0	19.1	57.8	.969	2.91	55.6

* - 95% of the monthly averages are expected to be within the performance standard, P.

Table A-4d

Historical Effluent Monitoring Data Summary
with Variability Factors and Performance Standards
30 Day Averages
Subcategory Chlorine
Mercury Cell Process
Plant #D

Parameter	Historical Summary Statistics					Variability Factors	Performance Standards
(kg/day)	No	Min	Avg	Max	CV	*	P
Mercury	22	.032	.047	.098	.340	1.66	.079
Chlorine (Total Residual)	14	39.1	203	616	.945	2.89	588

* - 95% of the monthly averages are expected to be within the performance standard, P.

Table A-4e

Historical Effluent Monitoring Data Summary
with Variability Factors and Performance Standards
Daily Measurements
Subcategory Chlorine
Mercury Cell Process
Plant #D

Parameter	Historical Summary Statistics					Variability Factors	Performance Standards
(g/kkg)	No	Min	Avg	Max	CV	*	P
Mercury	82	.386	.864	2.17			1.91
Chlorine (Total Residual)							

* - 99% of the daily maximum measurements expected to be less than the performance standard, P.

Table A-4f

Historical Effluent Monitoring Data Summary
with Variability Factors and Performance Standards
30 Day Averages
Subcategory Chlorine
Mercury Cell Process
Plant #D

Parameter	Historical Summary Statistics					Variability Factors	Performance Standards
(g/kkg)	No	Min	Avg	Max	CV	*	P
Mercury	22	.588	.864	1.8			1.45
Chlorine (Total Residual)							

* - 95% of the monthly averages are expected to be within the performance standard, P.

Table A-5a

Historical Effluent Monitoring Data Summary
with Variability Factors and Performance Standards
Daily Measurements
Subcategory Chlorine
Diaphram Cell Process
Plant #E

Parameter	Historical Summary Statistics					Variability Factors	Performance Standards
(kg/day)	No	Min	Avg	Max	CV	*	P
Lead	153	.045	1.42	5.40		4.12	5.85

* - 99% of the daily maximum measurements expected to be less than the performance standard, P.

Table A-5b

Historical Effluent Monitoring Data Summary
with Variability Factors and Performance Standards
30 Day Averages
Subcategory Chlorine
Diaphram Cell Process
Plant #E

Parameter	Historical Summary Statistics					Variability Factors	Performance Standards
(kg/day)	No	Min	Avg	Max	CV	*	P
Lead	12	.460	1.42	5.40	.824	1.58	2.25

* - 95% of the monthly averages are expected to be within the performance standard, P.

Table A-5e

Historical Effluent Monitoring Data Summary
with Variability Factors and Performance Standards
Daily Measurements
Subcategory Chlorine
Diaphram Cell Process
Plant #E

Parameter	Historical Summary Statistics					Variability Factors	Performance Standards
(g/kkg)	No	Min	Avg	Max	CV	*	P
Lead	153	.205	6.46	24.6			26.6

* - 99% of the daily maximum measurements expected to be less than the performance standard, P.

Table A-5f

Historical Effluent Monitoring Data Summary
with Variability Factors and Performance Standards
30 Day Averages
Subcategory Chlorine
Diaphram Cell Process
Plant #E

Parameter	Historical Summary Statistics					Variability Factors	Performance Standards
(g/kkg)	No	Min	Avg	Max	CV	*	P
Lead	12	2.09	6.46	24.6			10.24

* - 95% of the monthly averages are expected to be within the performance standard, P.

Tables A-6a, A-6b, A-6c, and A-6d
(Deleted)

Table A-7a

Historical Effluent Monitoring Data Summary
with Variability Factors and Performance Standards
30 Day Averages
Subcategory Hydrofluoric Acid/
Plant #G

Parameter	Historical Summary Statistics					Variability Factors	Performance Standards
(kg/day)	No	Min	Avg	Max	CV	*	P
Fluoride	15	4.54	16.7	27.2	.449	1.74	29.0
TSS	16	7.26	28.6	52.2	.441	1.72	49.2

* - 95% of the monthly averages are expected to be within the performance standard, P.

Table A-7e

Historical Effluent Monitoring Data Summary
with Variability Factors and Performance Standards
30 Day Averages
Subcategory Hydrofluoric Acid/
Plant #G

Parameter	Historical Summary Statistics					Variability Factors	Performance Standards
(g/kkg)	No	Min	Avg	Max	CV	*	P
Fluoride	15	99.1	365	594			633
TSS	16	158.5	624	1140			1074

* - 95% of the monthly averages are expected to be within the performance standard, P.

Table A-8b

Historical Effluent Monitoring Data Summary
with Variability Factors and Performance Standards
Daily Measurements
Subcategory Titanium Dioxide
Chloride Process
Plant #H

Parameter	Historical Summary Statistics					Variability Factors	Performance Standards
(kg/day)	No	Min	Aver	Max	CV	*	P
Chromium	394	.000	.013	.210	1.69	7.78	.097
Copper	394	.000	.027	.190	1.04	5.20	.139
Zinc	394	.000	.028	.108	.679	3.42	.097
TSS	394	0.40	8.34	176.	1.92	8.35	69.7

* - 99% Of the daily maximum measurements expected to be less than the performance standard, P.

Table A-8c

Historical Effluent Monitoring Data Summary
with Variability Factors and Performance Standards
30 Day Averages
Subcategory Titanium Dioxide
Chloride Process
Plant #H

Parameter	Historical Summary Statistics					Variability Factors	Performance Standards
(mg/l)	No	Min	Aver	Max	CV	*	P
Chromium	13	.000	.004	.013	.750	2.46	0.010
Copper	13	.000	.010	.030	.700	2.43	0.024
Zinc	13	.001	.012	.026	.500	1.93	0.023
TSS	13	1.20	3.14	8.60	.599	1.98	6.22

* - 95% of the monthly averages are expected to be within the performance standard, p.

Table A-8d

Historical Effluent Monitoring Data Summary
with Variability Factors and Performance Standards
30 Day Averages
Subcategory Titanium Dioxide
Chloride Process
Plant #H

Parameter	Historical Summary Statistics					Variability Factors	Performance Standards
(kg/day)	No	Min	Avg	Max	CV	*	P
Chromium	13	.002	.013	.043	.769	2.62	.033
Copper	13	.000	.027	.100	.852	2.74	.073
Zinc	13	.004	.028	.051	4.29	1.80	.051
TSS	13	2.60	8.34	24.0	.695	2.14	17.9

* - 95% of the monthly averages are expected to be within the performance standard, P.

Table A-8e

Historical Effluent Monitoring Data Summary
with Variability Factors and Performance Standards
Daily Measurements
Subcategory Titanium Dioxide
Chloride Process
Plant #H

Parameter	Historical Summary Statistics					Variability Factors	Performance Standards
(g/kkg)	No	Min	Aver	Max	CV	*	P
Chromium	394	.000	.178	2.88			1.33
Copper	394	.000	.37	2.6			1.9
Zinc	394	.000	.384	1.48			1.33
TSS	394	5.49	114	2415			956

* - 99% of the daily maximum measurements expected to be less than the performance standard, P.

Table A-8f

Historical Effluent Monitoring Data Summary
with Variability Factors and Performance Standards
30 Day Averages
Subcategory Titanium Dioxide
Chloride Process
Plant #H

Parameter	Historical Summary Statistics					Variability Factors	Performance Standards
(g/kkg)	No	Min	Avg	Max	CV	*	P
Chromium	13	.027	.178	.59			.453
Copper	13	.000	.37	1.37			1.0
Zinc	13	.055	.384	.70			.70
TSS	13	35.7	114	329			246

* - 95% of the monthly averages are expected to be within the performance standard, P.

Table A-9a

Historical Effluent Monitoring Data Summary
with Variability Factors and Performance Standards
Daily Measurements
Subcategory Titanium Dioxide
Sulfate Process
Plant #I

Parameter	Historical Summary Statistics					Variability Factors	Performance Standards
(mg/l)	No	Min	Avg	Max	CV	*	P
Cadmium	26	.001	.009	.020	.444	2.03	0.018
Chromium	26	.010	.021	.070	.857	4.23	0.088
Iron (total)	30	.40	3.25	19.1	1.42	6.74	21.9
Iron (diss)	153	.080	.279	4.98	2.01	8.64	2.41
Lead	26	.002	.017	.050	.765	3.67	0.062
Nickel	26	.010	.029	.080	.690	3.52	0.102
Zinc	26	.010	.027	.300	2.11	9.93	0.268
TSS	183		35.8		1.71	7.70	276.

* - 99% Of the daily maximum measurements expected to be less than the performance standard, P.

Table A-9a-1

Historical Effluent Monitoring Data Summary
with Variability Factors and Performance Standards
Daily Measurements
Subcategory Titanium Dioxide
Sulfate Process
Plant #I
April 76 through September 78

Parameter	Historical Summary Statistics					Variability Factors	Performance Standards
(mg/l)	No	Min	Avg	Max	CV	*	P
Cadmium	109	.001	.058	.100	.762	3.85	.224
Chromium	128	.010	.072	.400	.755	3.81	.275
Iron**	854	.010	.620	59.9	5.58	13.5	8.39
Lead	128	.002	.068	.100	.609	3.15	.214
Nickel	128	.010	.080	.680	.883	4.39	.354
Zinc	128	.010	.151	1.14	1.35	6.41	.966
TSS	899	.000	21.2	975	3.11	11.0	233

* - 99% of the daily maximum measurements expected to be less than the performance standard, P.

** 04-76 to 08-78

Table A-9a-2

Historical Effluent Monitoring Data Summary
with Variability Factors and Performance Standards
Daily Measurements
Subcategory Titanium Dioxide
Sulfate Process
Plant #I
September 78 through February 79

Parameter	Historical Summary Statistics					Variability Factors	Performance Standards
(mg/l)	No	Min	Avg	Max	CV	*	P
Cadmium	22	.1	.1	.1	0	1	.1
Chromium	22	.10	1.8	7.40	1.38	6.52	11.7
Iron	164	.80	335	680	.475	2.59	867
Lead	22	.1	.1	.1	0	1	.1
Nickel	22	.100	.991	3.50	1.28	6.13	6.07
Zinc	22	.100	2.10	7.90	1.24	5.96	12.5
TSS **	136	3.99	248	2,699	1.48	6.87	1704

* - 99% of the daily maximum measurements expected to be less than the performance standard, P.

** 09-78 to 01-79

Table A-9b-1

Historical Effluent Monitoring Data Summary
with Variability Factors and Performance Standards
Daily Measurements
Subcategory Titanium Dioxide
Sulfate Process
Plant #I
April 76 through September 78

Parameter	Historical Summary Statistics					Variability Factors	Performance Standards
(kg/day)	No	Min	Avg	Max	CV	*	P
Cadmium	109	.004	.432	.908	.782	3.95	1.70
Chromium	128	.045	.526	2.65	.707	3.61	1.90
Iron**	854	1.00	4.29	3,854	5.78	13.6	585
Lead	128	.008	.503	.908	.634	3.27	1.65
Nickel	128	.047	.576	3.99	.790	3.98	2.29
Zinc	128	.049	1.07	55.1	1.33	6.32	6.76
TSS	899	26	1,350	58,820	2.79	10.5	14,120

* - 99% of the daily maximum measurements expected to be less than the performance standard, P.

** 04-76 to 08-78

Table A-9b-2

Historical Effluent Monitoring Data Summary
with Variability Factors and Performance Standards
Daily Measurements
Subcategory Titanium Dioxide
Sulfate Process
Plant #I
September 78 through February 79

Parameter	Historical Summary Statistics					Variability Factors	Performance Standards
(kg/day)	No	Min	Avg	Max	CV	*	P
Cadmium	22	.511	.692	.833	.112	1.29	.891
Chromium	22	.643	11.9	48.7	1.35	6.38	75.9
Iron	164	45	22,794	49,315	.49	2 2.65	60,467
Lead	22	.583	.693	.833	.106	1.27	.882
Nickel	22	.511	6.53	23.1	1.25	5.97	39.0
Zinc	22	.511	14.6	55.1	1.23	5.90	86.1
TSS**	136	226	16,738	185,904	1.49	6.92	115,844

* - 99% of the daily maximum measurements expected to be less than the performance standard, P.

** 09-78 to 01-79

Table A-9c-1

Historical Effluent Monitoring Data Summary
with Variability Factors and Performance Standards
30 Day Averages
Subcategory Titanium Dioxide
Sulfate Process
Plant #I
April 76 through September 78

Parameter	Historical Summary Statistics					Variability Factors	Performance Standards
(mg/l)	No	Min	Avg	Max	CV	*	P
Cadmium	26	.003	.058	.100	.722	2.43	.142
Chromium	30	.010	.072	.130	.524	2.04	.147
Iron**	28	.060	.620	3.74	1.51	4.00	2.47
Lead	30	.004	.068	.100	.578	2.14	.147
Nickel	30	.010	.080	.245	.594	4.39	.354
Zinc	30	.010	.151	.815	1.03	2.69	.406
TSS	30	1.58	21.2	74.8	1.03	3.04	64.3

* - 95% of the monthly averages are expected to be within the performance standard, P.

** 04-76 to 08-78

Table A-9c-2

Historical Effluent Monitoring Data Summary
with Variability Factors and Performance Standards
30 Day Averages
Subcategory Titanium Dioxide
Sulfate Process
Plant #I
September 78 through February 79

Parameter	Historical Summary Statistics					Variability Factors	Performance Standards
(mg/l)	No	Min	Avg	Max	CV	*	P
Cadmium	6	.1	.1	.1	0	1	.1
Chromium	6	.10	1.8	4.8	1.17	3.32	5.98
Iron	6	6.08	335	496	.421	1.84	615
Lead	6	.1	.1	.1	0	1	.1
Nickel	6	.100	.991	2.50	1.10	3.18	3.16
Zinc	6	.325	2.10	1.50	.904	2.79	5.84
TSS**	5	86.2	248	594	.750	2.49	617

* - 95% of the monthly averages are expected to be within the performance standard, P.

** 09-78 to 01-79

Table A-9d-1

Historical Effluent Monitoring Data Summary
with Variability Factors and Performance Standards
30 Day Averages
Subcategory Titanium Dioxide
Sulfate Process
Plant #I
April 76 through September 78

Parameter	Historical Summary Statistics					Variability Factors	Performance Standards
(kg/day)	No	Min	Avg	Max	CV	*	P
Cadmium	26	.016	.432	.780	.743	2.47	1.07
Chromium	30	.064	.526	.862	.549	2.09	1.10
Iron**	28	4.00	42.9	294	1.59	4.14	177
Lead	30	.021	.503	.852	.602	2.19	1.10
Nickel	30	.065	.576	1.49	.569	2.13	1.23
Zinc	30	.074	1.07	5.62	.996	2.97	3.18
TSS	30	116	1,350	4,797	1.01	2.99	4,041

* - 95% of the monthly averages are expected to be within the performance standard, P.

** 04-76 to 08-78

Table A-9d-2

Historical Effluent Monitoring Data Summary
with Variability Factors and Performance Standards
30 Day Averages
Subcategory Titanium Dioxide
Sulfate Process
Plant #I
September 78 through February 79

Parameter	Historical Summary Statistics					Variability Factors	Performance Standards
(kg/day)	No	Min	Avg	Max	CV	*	P
Cadmium	6	.622	.692	.757	.065	1.13	.781
Chromium	6	.685	11.9	33.6	1.17	3.32	39.4
Iron	6	4,561	22,794	33,428	.431	1.85	42,248
Lead	6	.667	.693	.757	.050	1.10	.762
Nickel	6	.681	6.53	17.3	1.09	3.16	20.6
Zinc	6	2.39	14.6	33.8	.896	2.77	40.5
TSS**	5	6,610	16,738	39,155	.717	2.42	40,495

* - 95% of the monthly averages are expected to be within the performance standard, P.

** 09-78 to 01-79

Table A-9e-1

Historical Effluent Monitoring Data Summary
with Variability Factors and Performance Standards
Daily Measurements
Subcategory Titanium Dioxide
Sulfate Process
Plant #I
April 76 through September 78

Parameter	Historical Summary Statistics					Variability Factors	Performance Standards
(g/kkg)	No	Min	Avg	Max	CV	*	P
Cadmium	109	.041	4.45	9.36			17.5
Chromium	128	.464	5.42	27.3			19.6
Iron**	854	10.3	44.2	39,711			6,028
Lead	128	.082	5.18	9.36			17.0
Nickel	128	.484	5.93	41.1			23.6
Zinc	128	.505	11.02	568			69.7
TSS	899	.268	13.91	606			145.5 (kg/kkg)

* - 99% of the daily maximum measurements expected to be less than the performance standard, P.

** 04-76 to 08-78

Table A-9e-2

Historical Effluent Monitoring Data Summary
with Variability Factors and Performance Standards
Daily Measurements
Subcategory Titanium Dioxide
Sulfate Process
Plant #I
September 78 through February 79

Parameter	Historical Summary Statistics					Variability Factors	Performance Standards
(g/kkg)	No	Min	Avg	Max	CV	*	P
Cadmium	22	5.26	7.13	8.58			9.18
Chromium	22	6.62	122.6	502			782
Iron	164	.464	235	508			623 (kg/kkg)
Lead	22	6.0	7.14	8.58			9.09
Nickel	22	5.26	67.3	238			402
Zinc	22	5.26	150	568			887
TSS**	136	2.33	172.5	1,915			1,194 (kg/kkg)

* - 99% of the daily maximum measurements expected to be less than the performance standard, P.

** 09-78 to 01-79

Table A-9f-1

Historical Effluent Monitoring Data Summary
with Variability Factors and Performance Standards
30 Day Averages
Subcategory Titanium Dioxide
Sulfate Process
Plant #I
April 76 through September 78

Parameter	Historical Summary Statistics					Variability Factors	Performance Standards
(g/kkg)	No	Min	Avg	Max	CV	*	P
Cadmium	26	.165	4.45	8.04			11.0
Chromium	30	.66	5.42	8.88			11.3
Iron**	28	41.2	442	3209			1,824
Lead	30	.216	5.18	8.78			11.3
Nickel	30	.67	5.94	15.4			12.7
Zinc	30	.762	11.0	57.9			32.8
TSS	30	1.2	13.9	49.4			41.6 (kg/kkg)

* - 95% of the monthly averages are expected to be within the performance standard, P.

** 04-76 to 08-78

Table A-9f-2

Historical Effluent Monitoring Data Summary
with Variability Factors and Performance Standards
30 Day Averages
Subcategory Titanium Dioxide
Sulfate Process
Plant #I
September 78 through February 79

Parameter	Historical Summary Statistics					Variability Factors	Performance Standards
(g/kkg)	No	Min	Avg	Max	CV	*	P
Cadmium	6	6.41	7.13	7.8			8.05
Chromium	6	7.06	123	346			406
Iron	6	47.0	235	344			435 (kg/kkg)
Lead	6	6.87	7.14	7.8			7.85
Nickel	6	7.02	67.3	178			212
Zinc	6	24.6	150	348			417
TSS**	5	68.1	172.5	403			417 (kg/kkg)

* - 95% of the monthly averages are expected to be within the performance standard, P.

** 09-78 to 01-79

Table A-10a

Historical Effluent Monitoring Data Summary
with Variability Factors and Performance Standards
Daily Measurements
Subcategory Aluminum Fluoride
Plant #J

Parameter	Historical Summary Statistics					Variability Factors	Performance Standards
(mg/l)	No	Min	Avg	Max	CV	*	P
Lead	152	0.11	2.28	12.8	.601	3.12	7.11

* - 99% of the daily maximum measurements expected to be less than the performance standard, P.

Table A-10b

Historical Effluent Monitoring Data Summary
with Variability Factors and Performance Standards
Daily Measurements
Subcategory Aluminum Fluoride
Plant #J

Parameter	Historical Summary Statistics					Variability Factors	Performance Standards
(kg/day)	No	Min	Avg	Max	CV	*	P
Lead	152	0.09	2.15	15.3	.753	3.82	8.20

* - 99% of the daily maximum measurements expected to be less than the performance standard, P.

Table A-10c

Historical Effluent Monitoring Data Summary
with Variability Factors and Performance Standards
30 Day Averages
Subcategory Aluminum Floride
Plant #J

Parameter	Historical Summary Statistics					Variability Factors	Performance Standards
(mg/l)	No	Min	Avg	Max	CV	*	P
Lead	10	1.51	2.28	3.90	.601	1.55	3.54

* - 95% of the monthly averages are expected to be within the performance standard, P.

Table A-10d

Historical Effluent Monitoring Data Summary
with Variability Factors and Performance Standards
30 Day Averages
Subcategory Aluminum Floride
Plant #J

Parameter	Historical Summary Statistics					Variability Factors	Performance Standards
(kg/day)	No	Min	Avg	Max	CV	*	P
Lead	10	1.51	2.15	3.70	.326	1.54	3.30

* - 95% of the monthly averages are expected to be within the performance standard, P.

Table A-10e

Historical Effluent Monitoring Data Summary
with Variability Factors and Performance Standards
Daily Measurements
Subcategory Aluminum Fluoride
Plant #J

Parameter	Historical Summary Statistics					Variability Factors	Performance Standards
(g/kkg)	No	Min	Avg	Max	CV	*	P
Lead	152	.89	21.2	150			80.7

* - 99% of the daily maximum measurements expected to be less than the performance standard, P.

Table A-10f

Historical Effluent Monitoring Data Summary
with Variability Factors and Performance Standards
30 Day Averages
Subcategory Aluminum Floride
Plant #J

Parameter	Historical Summary Statistics					Variability Factors	Performance Standards
(g/kkg)	No	Min	Avg	Max	CV	*	P
Lead	10	14.9	21.2	36.4			32.5

* - 95% of the monthly averages are expected to be within the performance standard, P.

Table A-11a

Historical Effluent Monitoring Data Summary
with Variability Factors and Performance Standards
30 Day Averages
Chrome Pigments Subcategory
Plant #K

Parameter	Historical Summary Statistics					Variability Factors	Performance Standards
(mg/l)	No	Min	Avg	Max	CV	*	P
Arsenic	23	.0096	.079	.235	.668	2.02	.156
Cadmium	23	.050	.079	.164	.339	1.56	.123
Chromium (hexavalent)	23	.028	.112	.592	1.04	2.70	.302
Chromium (Total)	23	.197	.442	.799	.404	1.66	.733
Copper	23	.038	.134	.296	.529	1.87	.250
Lead	23	.217	.412	1.635	.681	2.12	.873
Mercury	23	.0004	.001	.0018	.400	1.66	.0016
Zinc	23	.012	.04	.087	.437	1.72	.074
Cyanide (Available)	23	.0003	.019	.076	1.57	3.58	.068
Cyanide (total)	23	.025	.118	.316	.995	2.63	.310
TSS	23	0.27	11.2	33.3	.662	2.01	22.5

* - 95% of the monthly averages are expected to be within the performance standard, P.

Table A-12a

Historical Effluent Monitoring Data Summary
with Variability Factors and Performance Standards
Daily Measurements
Subcategory Hydrogen Cyanide
Andrussow Process
Plant #L

Parameter	Historical Summary Statistics					Variability Factors	Performance Standards
(mg/l)	No	Min	Avg	Max	CV	*	P
Ammonia	35	14.	113.	188.	.335	2.02	229

* - 99% Of the daily maximum measurements expected to be less than the performance standard, P.

Table A-12b

Historical Effluent Monitoring Data Summary
with Variability Factors and Performance Standards
Daily Measurements
Subcategory Hydrogen Cyanide
Andrussow Process
Plant #L

Parameter	Historical Summary Statistics					Variability Factors	Performance Standards
(kg/day)	No	Min	Avg	Max	CV	*	P
Ammonia	35	112	1533	2419	.365	2.14	3283

* - 99% of the daily maximum measurements expected to be less than the performance standard, P.

Table A-12c

Historical Effluent Monitoring Data Summary
with Variability Factors and Performance Standards
30 Day Averages
Subcategory Hydrogen Cyanide
Andrussow Process
Plant #L

Parameter	Historical Summary Statistics					Variability Factors	Performance Standards
(mg/l)	No	Min	Avg	Max	CV	*	P
Ammonia	8	80.	113.	134.	.335	1.32	150

* - 95% Of the monthly averages are expected to be within the performance standard, P.

Table A-12d

Historical Effluent Monitoring Data Summary
with Variability Factors and Performance Standards
30 Day Averages
Subcategory Hydrogen Cyanide
Andrussow Process
Plant #L

Parameter	Historical Summary Statistics					Variability Factors	Performance Standards
(kg/day)	No	Min	Avg	Max	CV	*	P
Ammonia	8	908	1533	1941	.212	1.42	2177

* - 95% of the monthly averages are expected to be within the performance standard, P.

Table A-12e

Historical Effluent Monitoring Data Summary
with Variability Factors and Performance Standards
Daily Measurements
Subcategory Hydrogen Cyanide
Andrussow Process
Plant #L

Parameter	Historical Summary Statistics					Variability Factors	Performance Standards
(kg/kkg)	No	Min	Avg	Max	CV	*	P
Ammonia	35	.606	8.29	1309			17.8

* - 99% of the daily maximum measurements expected to be less than the performance standard, P.

Table A-12f

Historical Effluent Monitoring Data Summary
with Variability Factors and Performance Standards
30 Day Averages
Subcategory Hydrogen Cyanide
Andrussow Process
Plant #L

Parameter	Historical Summary Statistics					Variability Factors	Performance Standards
(kg/kkg)	No	Min	Avg	Max	CV	*	P
Ammonia	8	46.9	8.29	10.5			11.8

* - 95% of the monthly averages are expected to be within the performance standard, P.

Table A-13a

Historical Effluent Monitoring Data Summary
with Variability Factors and Performance Standards
Daily Measurements
Subcategory
Andrussow Process
Plant #M

Parameter	Historical Summary Statistics					Variability Factors	Performance Standards
(mg/l)	No	Min	Avg	Max	CV	*	P
Cyanide (Free)	534	.01	.202	3.27	1.58	7.26	1.46
Cyanide (Total)	25	.039	.192	.460	.667	3.42	.65
Ammonia	26	.193	3.63	10.2	.636	3.51	12.7
COD	25	2.71	15.9	45.2	.552	2.90	46.1
TOC	26	.783	8.30	25.6	.845	4.22	35.0
SS	22	5	35	267	1.57	8.16	286

* - 99% of the daily maximum measurements expected to be less than the performance standard, P.

Table A-13b (Deleted)

Table A-13c

Historical Effluent Monitoring Data Summary
with Variability Factors and Performance Standards
30 Day Averages
Subcategory Hydrogen Cyanide
Andrussow Process
Plant M

Parameter	Historical Summary Statistics					Variability Factors	Performance Standards
(mg/l)	No	Min	Avg	Max	CV	*	P
Cyanide (Free)	19	.082	.202	.351	.391	1.78	0.359

* - 95% of the monthly averages are expected to be within the performance standard, P.

Table A-13e

Historical Effluent Monitoring Data Summary
with Variability Factors and Performance Standards
30 Day Averages
Hydrogen Cyanide Subcategory
Andrussow Process
Plant #M

Parameter	Historical Summary Statistics					Variability Factors	Performance Standards
(g/kkg)	No	Min	Avg	Max	CV	*	P
Cyanide	19	.457	1.12	1.95			1.99

* - 95% of the monthly averages are expected to be within the performance standard, P.

Tables A-14a and A-14b
(Deleted)

Table A-15a

Historical Effluent Monitoring Data Summary
with Variability Factors and Performance Standards
Daily Measurements
Subcategory Nickel Sulfate
Plant #0

Parameter	Historical Summary Statistics					Variability Factors	Performance Standards
(mg/l)	No	Min	Avg	Max	CV	*	P
Nickel	88	.080	1.83	8.33	1.21	5.84	10.7

* - 99% of the daily maximum measurements expected to be less than the performance standard, P.

Table A-15b

Historical Effluent Monitoring Data Summary
with Variability Factors and Performance Standards
Daily Measurements
Subcategory Nickel Sulfate
Plant #0

Parameter	Historical Summary Statistics					Variability Factors	Performance Standards
(kg/day)	No	Min	Avg	Max	CV	*	P
Nickel	88	1.02	8.32	44.6	1.31	6.24	51.9

* - 99% of the daily maximum measurements expected to be less than the performance standard, P.

Table A-15c

Historical Effluent Monitoring Data Summary
with Variability Factors and Performance Standards
30 Day Averages
Subcategory Nickel Sulfate
Plant #0

Parameter	Historical Summary Statistics					Variability Factors	Performance Standards
(mg/l)	No	Min	Avg	Max	CV	*	P
Nickel	3	1.29	1.83	2.48	1.21	1.54	2.82

* - 95% of the monthly averages are expected to be within the performance standard, P.

Table A-15d

Historical Effluent Monitoring Data Summary
with Variability Factors and Performance Standards
30 Day Averages
Subcategory Nickel Sulfate
Plant #0

Parameter	Historical Summary Statistics					Variability Factors	Performance Standards
(kg/day)	No	Min	Avg	Max	CV	*	P
Nickel	3	5.04	8.32	11.1	.302	1.49	12.4

* - 95% of the monthly averages are expected to be within the performance standard, P.

Table A-15e

Historical Effluent Monitoring Data Summary
with Variability Factors and Performance Standards
Daily Measurements
Subcategory Nickel Sulfate
Plant #O

Parameter	Historical Summary Statistics					Variability Factors	Performance Standards
(g/kkg)	No	Min	Avg	Max	CV	*	P
Nickel	88	112	912	4890			5,691

* - 99% of the daily maximum measurements expected to be less than the performance standard, P.

Table A-15f

Historical Effluent Monitoring Data Summary
with Variability Factors and Performance Standards
30 Day Averages
Subcategory Nickel Sulfate
Plant #O

Parameter	Historical Summary Statistics					Variability Factors	Performance Standards
(g/kkg)	No	Min	Avg	Max	CV	*	P
Nickel	3	553	912	1217			1,360

* - 95% of the monthly averages are expected to be within the performance standard, P.

Table A-16a

Historical Effluent Monitoring Data Summary
with Variability Factors and Performance Standards
30 Day Averages
Subcategory Sodium Hydrosulfite
Plant fP

Parameter	Historical Summary Statistics					Variability Factors	Performance Standards
(kg/day)	No	Min	Avg	Max	CV	*	P
TSS	36	.91	3.78	41.1	1.69	3.77	14.2

* - 95% of the monthly averages are expected to be within the performance standard, P.

Table A-16e

Historical Effluent Monitoring Data Summary
with Variability Factors and Performance Standards
30 Day Averages
Subcategory Sodium Hydrosulfite
Plant fP

Parameter	Historical Summary Statistics					Variability Factors	Performance Standards
(g/kkg)	No	Min	Avg	Max	CV	*	P
TSS	36	16.3	67.5	734			254

* - 95% of the monthly averages are expected to be within the performance standard, P.

Table A-17a
(Deleted)

APPENDIX B

pH CONTROL OF INDUSTRIAL WASTE WATERS

IN THE

INORGANIC CHEMICALS INDUSTRY

Prepared for

Effluent Guidelines Division
Office of Water and Hazardous Materials
U. S. Environmental Protection Agency
Washington, D.C. 20460

Robert B. Schaffer, Director

Contract No. 68-01-5767
Work Order No. 5

Prepared by

JACOBS ENGINEERING GROUP INC.
JACOBS ENVIRONMENTAL DIVISION
251 SOUTH LAKE AVENUE
PASADENA, CALIFORNIA 91101

OCTOBER 1979

Intentionally Blank Page

TABLE OF CONTENTS

		Page
	LIST OF FIGURES	B - v
	LIST OF TABLES	vi
1.0	CONCLUSIONS AND SUMMARY	1
	1.1 CONCLUSIONS	1
	1.2 SUMMARY	3
2.0	RECOMMENDATIONS	5
3.0	INTRODUCTION	7
	3.1 GENERAL	7
	3.2 PURPOSE	7
	3.3 METHODOLOGY	8
	3.3.1 Peak and Duration	9
	3.3.2 Reason Codes	9
	3.3.3 Treatment System Reviews	12
	3.3.4 General Data	12
4.0	pH CONTROL OF INDUSTRIAL WASTE WATER	13
	4.1 BACKGROUND INFORMATION	13
	4.1.1 pH	13
	4.1.2 Chemicals	13
	4.1.3 Control System	14
	4.1.4 Other Factors of Neutralization	17
	4.2 PLANT pH CONTROL INFORMATION	18
	4.2.1 General	18
	4.2.2 Plant System Review	20
5.0	EXCURSION DATA	23
	5.1 EXCURSION DATA ANALYSIS	23
	5.2 PLANT COMPLIANCE OF pH	24
6.0	pH CONTROL COST DATA	77
	6.1 GENERAL	77
	6.2 PLANT DATA	78

TABLE OF CONTENTS (Continued)

	Page
REFERENCES	B - 89
APPENDIX A TRIP REPORTS AND RAW EXCURSION DATA	A-1
A.1 INTRODUCTION	A-1
A.2 PLANT TRIP REPORTS	A-1
A.3 pH EXCURSION DATA	B - A-20

LIST OF FIGURES

		Page
1-1	Plot of Average Percent Actual Excursion Time for Unit pH Ranges	B - 2
3-1	Illustration of Typical Excursions and Data Extraction Methodology	10
4-1	Neutralization Curves of 100 ml of HCl (Strong Acid) with NaOH (Strong Base) and Aqueous Ammonia Solution (Weak Base)	16
A-1	Simplified Flow Diagram of the Waste Water Treatment System of Plant #102	A-4
A-2	Waste Treatment Lagoon System for Plant #102	A-5
A-3	Simplified Flow Diagram of the Waste Water Treatment System of Plant #150	A-7
A-4	Simplified Flow Diagram of the Treatment System of Plant #491 (Sulfuric Acid Subcategory)	A-9
A-5	Block Diagram of Treatment System for Plant #586	A-11
A-6	Simplified Block Diagram of the Waste Water Treatment System of Plant #664	A-13
A-7	Plant #782 East Chemical Sewer	A-15
A-8	Block Diagram of Treatment System for Plant #782	A-16
A-9	Simplified Block Diagram of Waste Water Treatment System of Plant #928	B - A-19

LIST OF TABLES

		Page
4-1	COST OF ALKALINE REAGENTS	B - 15
4-2	FLOW AND pH CONTROL SYSTEM SUMMARY OF PLANTS REVIEWED FOR pH ASSESSMENT IN THE INORGANIC CHEMICALS INDUSTRY	19
5-1	SUMMARY OF EXCURSION DURATION BREAKDOWN BY ACTUAL EXCURSION REASONS	27
5-2	PERCENTAGE DISTRIBUTION OF TOTAL pH EXCURSION TIME BY REASON AND PLANT	28
5-3	PERCENTAGE DISTRIBUTION OF ACTUAL pH EXCURSIONS BY pH RANGE AND PLANTS	29
5-4	PERCENTAGE DISTRIBUTION OF pH EXCURSIONS BY pH RANGE AND PLANTS	30
5-5	AVERAGE DURATION OF pH EXCURSIONS BY PLANT AND BY EXCURSION REASON	31
5-6	PERCENTAGE DISTRIBUTION OF NUMBER OF pH EXCURSIONS BY PLANT AND BY EXCURSION REASONS	32
5-7	EXCURSION BREAKDOWN SUMMARY BY DURATION TIME (ACTUAL EXCURSIONS ONLY)	33
5-8	DISTRIBUTION OF AVERAGE pH AND STANDARD DEVIATION VALUES OF ACTUAL pH EXCURSIONS BY PLANT	34
5-9	EXCURSION DURATION BREAKDOWN BY ALL AND ACTUAL EXCURSION REASONS FOR PLANT #102	35
5-10	ALL AND ACTUAL EXCURSION BREAKDOWN FOR PLANT #102 BY pH RANGE	36
5-11	DISTRIBUTION OF ACTUAL pH EXCURSION TIME BY MONTH AND BY DURATION RANGE FOR PLANT #102	37
5-12	PERCENTAGE DISTRIBUTION OF ACTUAL pH EXCURSION TIME BY MONTH AND BY DURATION RANGE FOR PLANT #102	37
5-13	TIME AND NUMBER OF EXCURSIONS BREAKDOWN BY ACTUAL AND NON-ACTUAL REASONS FOR PLANT #102	B - 38

LIST OF TABLES (Continued)

		Page
5-14	EXCURSION DURATION BREAKDOWN BY ALL AND ACTUAL EXCURSION REASONS FOR PLANT #150	B- 39
5-15	ALL AND ACTUAL EXCURSION BREAKDOWN FOR PLANT #150 BY pH RANGE	40
5-16	DISTRIBUTION OF ACTUAL pH EXCURSION TIME BY MONTH AND BY DURATION RANGE FOR PLANT #150	41
5-17	PERCENTAGE DISTRIBUTION OF ACTUAL pH EXCURSION BY MONTH AND BY DURATION RANGE FOR PLANT #150	42
5-18	TIME AND NUMBER OF EXCURSIONS BREAKDOWN BY ACTUAL AND NON-ACTUAL REASONS FOR PLANT #150	43
5-19	EXCURSION DURATION BREAKDOWN BY ALL AND ACTUAL EXCURSION REASONS FOR PLANT #491	45
5-20	ALL AND ACTUAL EXCURSION BREAKDOWN FOR PLANT #491 BY pH RANGE	46
5-21	DISTRIBUTION OF ACTUAL pH EXCURSION TIME BY MONTH AND BY DURATION RANGE FOR PLANT #491	47
5-22	PERCENTAGE DISTRIBUTION OF ACTUAL pH EXCURSION BY MONTH AND BY DURATION RANGE FOR PLANT #491	48
5-23	TIME AND NUMBER OF EXCURSIONS BREAKDOWN BY ACTUAL AND NON-ACTUAL REASONS FOR PLANT #491	49
5-24	EXCURSION DURATION BREAKDOWN BY ALL AND ACTUAL EXCURSION REASONS FOR PLANT #664	50
5-25	ALL AND ACTUAL EXCURSION BREAKDOWN FOR PLANT #664 BY pH RANGE	51
5-26	DISTRIBUTION OF ACTUAL pH EXCURSION TIME BY MONTH AND BY DURATION RANGE FOR PLANT #664	52
5-27	PERCENTAGE DISTRIBUTION OF ACTUAL pH EXCURSION BY MONTH AND BY DURATION RANGE FOR PLANT #664	53
5-28	TIME AND NUMBER OF EXCURSIONS BREAKDOWN BY ACTUAL AND NON-ACTUAL REASONS FOR PLANT #664	54
5-29	EXCURSION DURATION BREAKDOWN BY ALL AND ACTUAL EXCURSION REASONS FOR PLANT #586	B- 55

LIST OF TABLES (Continued)

		Page
5-30	ALL AND ACTUAL EXCURSION BREAKDOWN FOR PLANT #586 BY pH RANGE	B - 56
5-31	DISTRIBUTION OF ACTUAL pH EXCURSION TIME BY MONTH AND BY DURATION RANGE FOR PLANT #586	57
5-32	PERCENTAGE DISTRIBUTION OF ACTUAL pH EXCURSION BY MONTH AND BY DURATION RANGE FOR PLANT #586	58
5-33	TIME AND NUMBER OF EXCURSIONS BREAKDOWN BY ACTUAL AND NON-ACTUAL REASONS FOR PLANT #586	59
5-34	EXCURSION DURATION BREAKDOWN BY ALL AND ACTUAL EXCURSION REASONS FOR PLANT #782	60
5-35	ALL AND ACTUAL EXCURSION BREAKDOWN FOR PLANT #782 BY pH RANGE	61
5-36	DISTRIBUTION OF ACTUAL pH EXCURSION TIME BY MONTH AND BY DURATION RANGE FOR PLANT #782	62
5-37	PERCENTAGE DISTRIBUTION OF ACTUAL pH EXCURSION BY MONTH AND BY DURATION RANGE FOR PLANT #782	63
5-38	TIME AND NUMBER OF EXCURSIONS BREAKDOWN BY ACTUAL AND NON-ACTUAL REASONS FOR PLANT #782	64
5-39	EXCURSION DURATION BREAKDOWN BY ALL AND ACTUAL EXCURSION REASONS FOR PLANT #786	66
5-40	ALL AND ACTUAL EXCURSION BREAKDOWN FOR PLANT #786 BY pH RANGE	67
5-41	DISTRIBUTION OF ACTUAL pH EXCURSION TIME BY MONTH AND BY DURATION RANGE FOR PLANT #786	68
5-42	PERCENTAGE DISTRIBUTION OF ACTUAL pH EXCURSION BY MONTH AND BY DURATION RANGE FOR PLANT #786	69
5-43	TIME AND NUMBER OF EXCURSIONS BREAKDOWN BY ACTUAL AND NON-ACTUAL REASONS FOR PLANT #786	70
5-44	EXCURSION DURATION BREAKDOWN BY ALL AND ACTUAL EXCURSION REASONS FOR PLANT #928	71
5-45	ALL AND ACTUAL EXCURSION BREAKDOWN FOR PLANT #928 BY pH RANGE	B - 72

LIST OF TABLES (Continued)

		Page
5-46	DISTRIBUTION OF ACTUAL pH EXCURSION TIME BY MONTH AND BY DURATION RANGE FOR PLANT #928	B- 73
5-47	PERCENTAGE DISTRIBUTION OF ACTUAL pH EXCURSION BY MONTH AND BY DURATION RANGE FOR PLANT #928	74
5-48	TIME AND NUMBER OF EXCURSIONS BREAKDOWN BY ACTUAL AND NON-ACTUAL REASONS FOR PLANT #928	75
6-1	SUMMARY OF TOTAL ANNUAL COST OF pH CONTROL SYSTEM AND WASTE WATER FLOW OF PLANTS STUDIED FOR pH ASSESSMENT	80
6-2	pH TREATMENT AND CONTROL COSTS FOR PLANT #102	81
6-3	pH TREATMENT AND CONTROL COSTS FOR PLANT #150	82
6-4	pH TREATMENT AND CONTROL COSTS FOR PLANT #491	83
6-5	pH TREATMENT AND CONTROL COSTS FOR PLANT #586	84
6-6	pH TREATMENT AND CONTROL COSTS FOR PLANT #664	85
6-7	pH TREATMENT AND CONTROL COSTS FOR PLANT #782	86
6-8	pH TREATMENT AND CONTROL COSTS FOR PLANT #786	87
6-9	pH TREATMENT AND CONTROL COSTS FOR PLANT #928	88
A-1	EXPLANATION OF EXCURSION REASON-CODES	B- A-21

SECTION 1.0

CONCLUSIONS AND SUMMARY

1.1 CONCLUSIONS

There is a need to distinguish between real pH excursions, namely, those where the pH of the discharge is outside the range 6 to 9, and spurious pH excursions where equipment malfunctions and other problems may record a pH outside the range 6 to 9, when, in fact, the waste water stream is in compliance. Colloquially in industry these two conditions have come to be called "actual" and "non-actual" excursions.

The actual pH excursions observed varied from 0.004% to 2.06% of the time for subcategories screened (a total of 8 plants) in the Inorganic Chemicals Industry. The plant which has the highest actual excursion (2.06%) has a combined discharge, which includes the treated organic product waste water. The majority of the excursions for that plant resulted from the malfunction of the organic product waste water treatment system. Recently, the treatment system has been modified and the plant now has a good compliance record. If this plant is excluded, the actual excursions vary from 0.004 to 0.63%.

The percent of total time in both actual and non-actual excursions varied from 0.2 to 2.06 percent for the 8 plants visited in the Inorganic Chemicals Industry for data periods of 6 to 12 months.

For all the plants screened, 45 percent of the average actual excursions fell within the 5-10 pH range. The average excursion for all the plants for different pH ranges is given below and also shown in Figure 1-1.

pH Range	Average Percentage of Time (8 Plants) Actual Excursions
9.1- 9.9	15.35
5 - 5.9	30.19
5 - 9.9	45.54
5 -10.9	76.12
5 -11.9	76.12
4 -10.9	80.02
4 -11.9	80.02
3 -10.9	89.54
3 -11.9	89.54
3 -12.9	89.64
2 -10.9	92.47

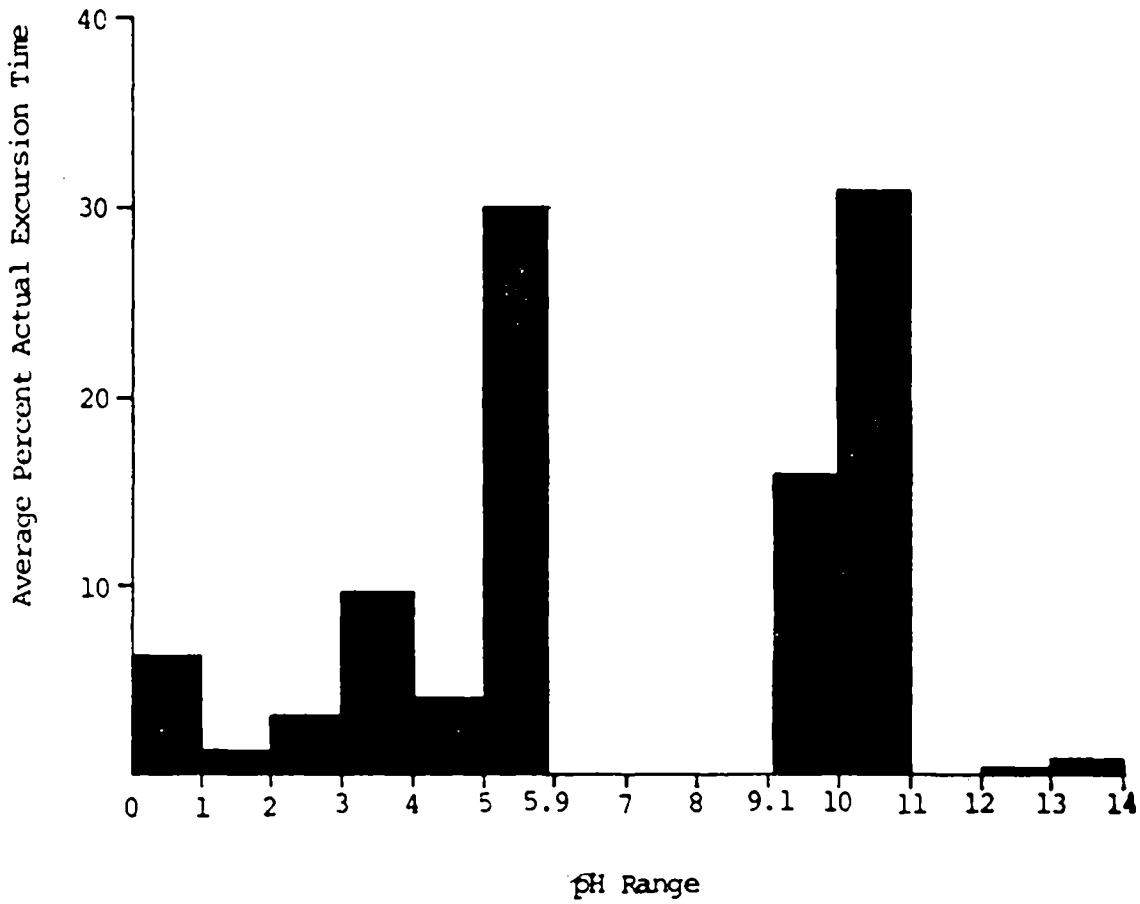

Figure 1-1. Plot of Average Percent Actual Excursion Time for Unit pH Ranges

2	-11.9	92.47
2	-12.9	92.54

The duration of average actual excursion for each plant varied from 7.5 minutes to 515 minutes.

The rate of discharge was not found to be associated with the excursion time. The ability of a plant to interrupt flow or divert flow to a pond or back to the neutralizer unit when an excursion occurs is very effective in minimizing the duration of the excursion. Two plants which had such provisions had the best pH compliance records.

The duration of pH excursions (based on total time period covered) resulting from different reasons showed the following ranges for the 8 plants studied:

Reason	Duration--Percentage of Time
Actual Excursions	
Treatment System	0-0.91
Upset/Shutdown	
Process Upset	0-0.91
Spills or Leaks	0-0.12
Storm Water Runoff	0-0.22
Emergency Operation	0-0.06
Operator Error	0-0.14
Other (Actual)	0-0.01
Unknown	0-0.18
Total Actual	0.004-2.06
Non-Actual Excursions	
Instrument Error	0.1-0.82
Instrument Calibration	0.007-0.97
Diversion/Interruption	0.70-1.32
Other (Non-Actual)	0.001-0.52
Total Non-Actual	0.11-1.756

Automatic control for neutralizing chemical addition showed better control of pH than manual addition.

1.2 SUMMARY

Eight plants sere visited in 9 subcategories within the Inorganic Chemicals Industry for observance of wasde water pH control system and review of the continuous pH monitoring data. The subcategories selected were those whose plant wastes were either acidic or alkaline or whose non-contact cooling water was susceptible to acid leakage. Control of waste water pH is of

great importance in these subcategories.

The continuous monitoring charts for the discharged effluent were examined for excursions outside the 6-9 pH range. Time of occurrence, duration of excursion, maximum peak or minimum trough, and reason for excursion were collected for each excursion. The raw data was compiled in a computer and statistical analyses were performed to evaluate the pH compliance record in the Inorganic Chemicals Industry. The data base will assist in evaluating the pH control efficiencies in the subcategories in which control of waste water pH might pose a persistent problem.

SECTION 2.0

RECOMMENDATIONS

Continuous and efficient monitoring of treated effluents helps in providing information which can lead to reducing pollutant discharge, decreasing material loss, and increasing the efficiency of the process/treatment system operation.

Continuous pH monitoring of the effluent should give a good picture of pH compliance, whereas with a grab sample collection and analysis for pH, a small duration excursion can be missed. Moreover, the grab sample method gives no information on the length or duration of an excursion, if detected.

If the plant effluent is highly acidic or alkaline, two or more stages of neutralization give better pH control than single stage neutralization.

Excursions can be reduced if provision is made to block or divert the flow to a neutralization tank, holding tank, or a pond when the monitored pH is observed outside of the 6-9 range. If space requirements pose a problem for building a diversion pond, installing a holding tank with a retention capacity of one day's effluent flow will improve the compliance to standards. In addition, provision should be made in the design of the waste water equalization/neutralization system to handle the expected excursions in the raw waste flow rates from each process.

It is difficult to neutralize or control the pH of a stream with large pH fluctuations. The problem can be reduced or eliminated by installing an equalizing basin preceeding the neutralization reactor. The basin will yield a homogeneous effluent with a narrow pH range. If land is available, the inclusion of ponds to provide sufficiently long residence times after neutralization in the waste water treatment system will aid in equalizing and stabilizing the final pH and increasing the compliance efficiency. The neutralization reactor and the ponds (if used) should be designed to handle storm-runoff from the plant area.

Leaks into the cooling water should be controlled by the use of good equipment, by replacement as needed, and efficient operating practices. Spills can be reduced by instituting good maintenance procedures, especially in the inorganic acid-producing plants such as hydrochloric acid, sulfuric acid, and nitric acid. If non-contact cooling water is used on a once-through basis, it should be monitored continuously for pH at the equipment outlet points for leak detection by proper instrumentation.

Use of strong acids/bases for neutralization of strong acidic or alkaline waste waters requires precise control and sophisticated automatic monitoring in the absence of dissolved substances which can act as buffers. On the other hand, neutralization of strong alkaline or acidic waste waters with a weak acid or base helps in creating a buffer which maintains the reacted solution at neutrality even with slightly excessive or deficient addition of neutralizing agent.

Use of circular charts for continuous pH recordings helps in observing the excursion even after it has elapsed, in case it is missed at the time of occurrence. If strip roll charts are used, they should be removed every day or every 5th day. The possibility of missing and not observing the excursion later exists when the charts are taken out every 20 or 30 days. Plant personnel observing the charts should be asked to write the date and other pertinent data such as calibration, instrument repair, and error every day. On observance of an excursion, they should alert the supervisor to correct the problem and the possible reason for the excursion should be written down in a log book and on the chart.

A defendable limit for an actual excursion will be in the 0.1-0.6 percent of total time range for reasons such as process and treatment system upset/ malfunction, spills and leaks, rainfall runoff, etc.

A defendable limit will be 0.2-1.0 percent of time for pH excursions based on the total time resulting from non-actual reasons such as instrument calibration, instrument error, and effecting from diversion of flow, etc. Grab sample pH data kept in a log book should indicate that the effluent discharge was in the compliance pH limit of 6-9 during that time.

SECTION 3.0

INTRODUCTION

3.1 GENERAL

The pH of a solution is related to acidity or alkalinity and is a measure of the hydrogen ion concentration. The effluent limitation guidelines for pH for the Inorganic Chemicals Industry (with other industries) has been set between 6.0 and 9.0 to be achieved by Best Practicable Control Technology Currently Available. Water discharged between pH limits of 6-9 is harmless to aquatic or other life. Waste water that is acidic or alkaline in nature can cause harm to aquatic life and human welfare, and if discharged to city or county operated sewage treatment plants, can cause metal corrosion or damage to construction materials, and can kill the microbiological organisms used in the treatment system.

3.2 PURPOSE

The objectives of the following study were to review pH treatment systems and their effectiveness in the Inorganic Chemicals Industry, establish a data base on pH compliance time within the present 6-9 limits, and perform analyses on that data base in such a manner as to present a relevant picture of pH control in the Inorganic Chemicals Industry.

To achieve these objectives, nine subcategories were initially chosen on the assumption that these subcategories would be most likely to present pH control problems due to the nature of the raw wastes from the processes involved in production. It should be noted, however, that not all potential subcategories were chosen due to various other factors that were taken into consideration.

During the course of the study, one subcategory, Sodium Dichromate, was dropped while another, Chlor-Alkali, was added. The final list of subcategories studied is as follows:

Aluminum Fluoride*
Chlor-Alkali
Hydrochloric Acid
Hydrofluoric Acid
Hydrogen Cyanide
Sodium Bisulfite
Sodium Silicate
Sulfuric Acid
Titanium Dioxide (Chloride Process)

* The plant studied produces both HF and AlF_3.

One plant in each subcategory was chosen with the exceptions of the Hydrofluoric, Hydrochloric, and Sulfuric Acid subcategories. In the cases of Hydrofluoric and Sulfuric Acids, one plant in each subcategory was visited, with the HF plant being a combined HF-AlF3 waste water flow; an additional plant provided records on a combined HF-H2SO4 waste water flow. In the Hydrochloric Acid subcategory, two plants were visited. In the first case, the HCl subcategory waste water was mixed with a greater percent of the chlor-alkali subcategory waste water; thus, data on HCl for this plant was included in the larger Chlor-Alkali group, instead of being analyzed separately. In the second case, the plant did not have a treatment system and review of the charts showed numerous short duration excursions. The excursion reasons were not noted at the time of occurrence and, therefore, were not available at the time of the plant visit. The data of this plant has not been included due to its incomplete nature.

Plant visits were arranged on the basis of the following criteria:

1. Plant possession of automatic recorder(s) that continuously monitor(s) final effluent stream(s) at the point(s) of discharge.

2. Availability of at least six months, but preferably one year, of pH recordings for discharged effluent(s).

3. Plant possession of reasonably accurate records on recorded excursions. (Recorded excursions refer to those times where 6-9 limits were exceeded on charts and do not necessarily indicate actual discharge of waste water outside these limits.)

4. In some subcategories, the type of process used in production was also a factor in selection.

Due to process requirements, and to various state or local regulations, the number of plants in any given subcategory meeting the preceeding requirements was often limited, and in the case of Sodium Dichromate, no plant at all could be found that met established criteria.

After preliminary phone contact, plant selections were made, visits scheduled, and the process of data collection was begun.

3.3 METHODOLOGY

Three objectives were set for each of the plant visits. The first and primary objective was to tabulate excursion data including explanations. The second was to review the waste water treatment systems and the raw waste characteristics in relation to pH in an attempt to correlate data with the actual systems involved. The final objective, secondary in nature, was to obtain various other information on factors which have a bearing

on pH control such as the pH and volume of other process wastes being treated, type of pH equipment used, and costs involved.

Collection of excursion data was basically patterned after a previous pH study (1) which covered a number of other subcategories. The data, as in the previous study, was recorded, as shown in Figure 3-1A, in tabular form to include date, time, peak pH value, reason (in the form of a code) and remarks for each pH excursion. This data was, for each plant, later revised as necessary and analyzed with respect to the various types (or classifications) of excursions.

3.3.1 Peak and Duration

The pertinent values for these excursions, the peak value of the pH and the duration, were extracted in such a manner as to maximize the effect of the excursion. For each excursion, the maximum (minimum) pH was taken as the pH for the entire duration regardless of multiple peaks as long as the pH recording line never reentered the 6-9 tolerance bounds. The duration was measured from point of leaving the control range to point of reentering the control range as shown in Figure 3-1A. The exception to this would be with excursions resulting from instrument calibration/maintenance and instrument error, as was many times the case, if the recording chart swung both above and below the bounds in a short period of time. In this case, time above pH 9 and below pH 6 would be divided as best as possible into two excursions and the maximum and minimum peaks would be chosen as the pH for these total excursions, as shown in the example of Figure 3-1B.

3.3.2 Reason Codes

In order to assist in the analyses of data, likely causes for excursions were listed and numbered as follows:

1. Process upset
2. Treatment system malfunction/shutdown
3. Instrument error
4. Instrument calibration/maintenance
5. Operator error
6. Diversion in operation but pH monitor still recording. (Flow stopped or diverted, but the position of the pH probe resulted in recording pH of water that was not being discharged).
7. Other (apparent only)
8. Unknown
9. Emergency operation
10. Spills or leaks
11. Rainwater overflow
12. Other (actual)

Both reasons 11 and 12 were added during the course of the study to assist in analyses. Any previous excursions fitting these codes were subsequently revised.

A. Typical Excursion Peak

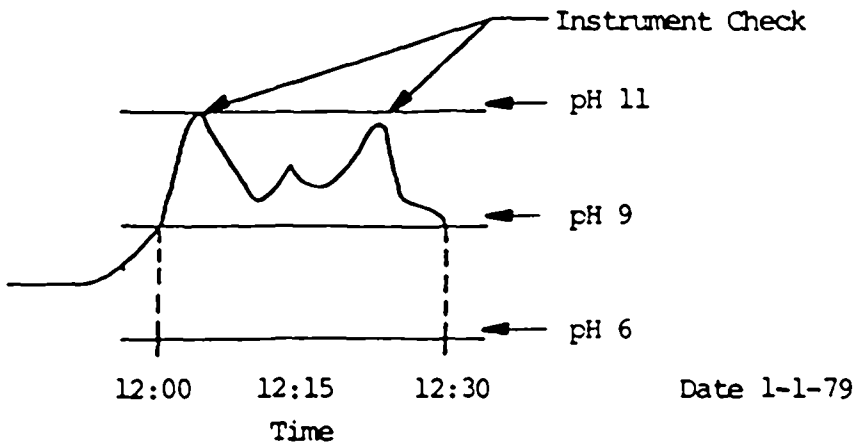

The example excursion above would have been recorded as:

Month - January 1979

DATE	TIME	PEAK	DURATION (min)	REASON
1-1	12:00	11.0	30	4

B. Non-Steady Excursion

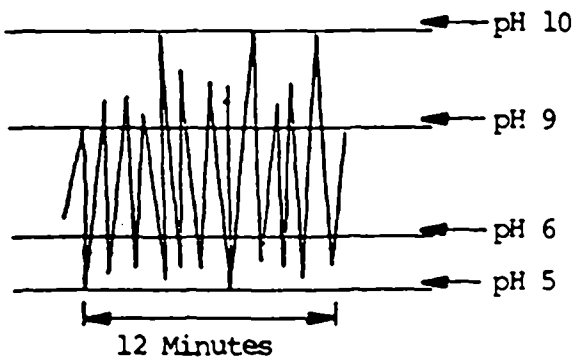

A high "total" excursion of six minutes duration with a peak pH of 10 along with a low "total" excursion of six minutes with peak pH of 5 would have been recorded.

Figure 3-1. Illustration of Typical Excursions and Data Extraction Methodology.

These codes were used to define various situations and are described as follows:

1. Process upset - was used to indicate those times when production problems or unexpected interruptions in production resulted in a pH excursion.

2. Treatment system malfunction/shutdown - was used to represent those times when failure of the treatment system itself to handle wastes properly, or shutdown of that system, led to pH excursions.

3. Instrument error - those times when the recorder showed an excursion when in fact there was none, because the instrument malfunctioned or was out of calibration.

4. Instrument calibration - used to represent those times when regular maintenance (i.e., cleaning the probe or calibrating the recorder) resulted in a recording outside limits, when in fact there was no excursion.

5. Operator error - this includes those times when the treatment system failed due to human error. This does not include overcorrection when waste water was treated manually (see reason 2).

6. Diversion in operation - was used to represent those times when discharge was either merely blocked or sent to a diversion pond or tank as a result of being out of specification for treated effluents, but pH monitor, due to its placement, continued to record a pH outside limits during the diversion period.

7. Other - any non-actual excursion that could be explained by a reason other than those listed in existing codes. Originally, this reason code included those excursions coded as reason 12, and referred to both actual and non-actual; however, these were later felt to be better separated for statistical reasons.

8. Unknown - included any recorded excursion for which no reason could be attributed.

9. Emergency operations - included any excursion that was uncontrollable due to such things as plant shutdown or power failure.

10. Spills or leaks - was used to represent those times where any spill or leak in any area of the plant, treatment, process or general working area, created a pH problem that the treatment system was not designed to handle. (Note: should the system be designed to handle the spill or leak and failed, both reasons would be included to give a better trace of the problem.)

11. Rainwater overflow - because of the fairly frequent occurrence of this problem, this reason was added to account for

those times when excursions resulted from treatment system overload due to heavy rainfall.

12. Other - any actual excursion that could be explained by a reason other than those listed in existing codes.

3.3.3 Treatment System Reviews

All of the available information on plant treatment systems pertinent to the subcategories of interest were reviewed and several plants toured, giving attention to those parts concerning or affecting pH control. These systems are described and their block diagrams included in the individual plant reports found in the Appendix.

3.3.4 General Data

The third objective of this study was to obtain information that could be related to the pH control and, conceivably, give some additional meaning to the data base compiled. This was achieved via a general questionnaire that included questions on flows, costs, type of control and equipment used, and specific areas of the treatment system having major effects on pH control such as chemicals used, etc.

In short, the three objectives of: 1) establishing a data base, 2) reviewing the treatment systems, and 3) providing related information were met fairly well and provided a good foundation from which to begin analyses and draw conclusions.

SECTION 4.0

pH CONTROL OF INDUSTRIAL WASTE WATER

4.1 BACKGROUND INFORMATION

4.1.1 pH

pH is a measure of the hydrogen-ion concentration of a solution and its value gives an indication of acidity or alkalinity. pH is defined as:

$$pH = \log \frac{1}{\text{hydrogen-ion concentration, moles/liter}}$$

Conventional pH measuring instruments and meters cover a range of 0-14 pH. Solutions with a pH value of 7 are neutral, solutions with a pH greater than 7 are basic, and solutions with pH values less than 7 are acidic (5).

Neutralization is the process of reacting an acid or a base to bring the pH of the solution to a neutral or near neutral condition. It is a common waste water treatment method, used to bring and control the pH of an effluent to the pH range of 6-9.

4.1.2 Chemicals

The common acids and alkaline reagents used for neutralization of waste water include the following:

Acid Reagents

1) Sulfuric acid
2) Hydrochloric acid
3) Carbon dioxide

Alkaline Reagents

1) Lime
2) Caustic soda
3) Soda ash
4) Limestone
5) Bicarbonates
6) Shells (oysters, etc.)
7) Ammonia

The selection of a neutralization chemical depends on such factors as price, availability, process compatibility, etc.

Sulfuric acid is the common acid used for the neutralization of alkaline waste. It is less costly than hydrochloric acid, but tends to form precipitates with calcium containing alkaline waste water. When hydrochloric acid is used for neutralization, the compound formed is soluble. Both sulfuric and hydrochloric acids are strong acids. Carbon dioxide is also used for neutralization.

An important consideration in the use of alkaline reagents for neutralization of acidic waste water is the "basicity factor", which is the number of grams of calcium oxide equivalent in neutralizing capacity of a particular alkali (2). The basicity factors and the costs of some of the alkaline reagents are given in Table 4-1. Caustic soda has a high basicity factor and high solubility, but is expensive. Lime is less costly, but has two disadvantages; it has low to moderate solubility (generally fed as 15% slurry) and forms precipitates with acidic waste waters containing sulfuric acid, causing disposal and scaling problems.

Limestone (calcium carbonate) and soda ash (sodium carbonate) have low to moderate basicity and higher solubility than lime, and, in the case of soda ash, the products of reaction are soluble. Sodium bicarbonate is a good alkaline agent for neutralization, but is expensive.

The rate of reaction between a strong acid and a strong base is fast and precise control is required to keep the pH of the neutralized solution between the 6-9 pH range. A slight excess or deficient quantity of neutralizing agent will result in several pH unit changes. On the other hand, when a strong acid (or base) is neutralized with a weak base (or acid), the rate of pH change is controlled by the ionization of an incompletely dissociated species which decreases the degree of pH response when a given amount of neutralizing agent is added.

Figure 4-1 shows the curves of a strong acid (0.1N HCl) titrated with a strong base (0.1N NaOH) and weak base (0.1N aqueous NH3). The curves have been superimposed to show the effect of pH changes with the addition of base. The point of greatest change is known as equivalence or inflection point where the pH changes most rapidly per unit of reagent (base) added. This occurs at the neutralization point. An excess of 10 ml of 0.1 NaOH added to the neutralized solution at the inflection point, in Figure 4-1, results in a change from a pH of 7 to 11.6 while a 10 ml excess of aqueous ammonia solution results in a change from a pH of 7 to 8.3. A 50 ml excess of aqueous ammonia solution at the inflection point results in a pH change from pH 7 to 9 only. Thus, the pH changes per unit of base in the case of strong acid titrated with a weak base is not as pronounced as in the strong acid, strong base titration. This is because salts of strong acid and weak bases or salts of weak acid and strong bases have a buffering capacity that will resist pH change, thereby making control easier to maintain.

4.1.3 Control System

TABLE 4-1. COST OF ALKALINE REAGENTS

Alkaline Reagent	Cost, $/Ton (Ref.)	Basicity Factor* (Ref.)	$/Ton of Basicity
Limestone ($CaCO_3$)	20.00	0.489	40.90
Quicklime (CaO)	32.50	0.941	34.54
Calcium Hydrate ($Ca(OH)_2$)	34.50	0.710	48.59
Soda Ash (Na_2CO_3)	62.00	0.507	122.29
Sodium Bicarbonate ($NaHCO_3$)	224.00	0.325	689.23
Caustic Soda-Solid (NaOH)	350.00	0.687	509.46

* "Basicity Factor" is the number of grams of calcium oxide equivalent in neutralization capacity of a particular alkali.

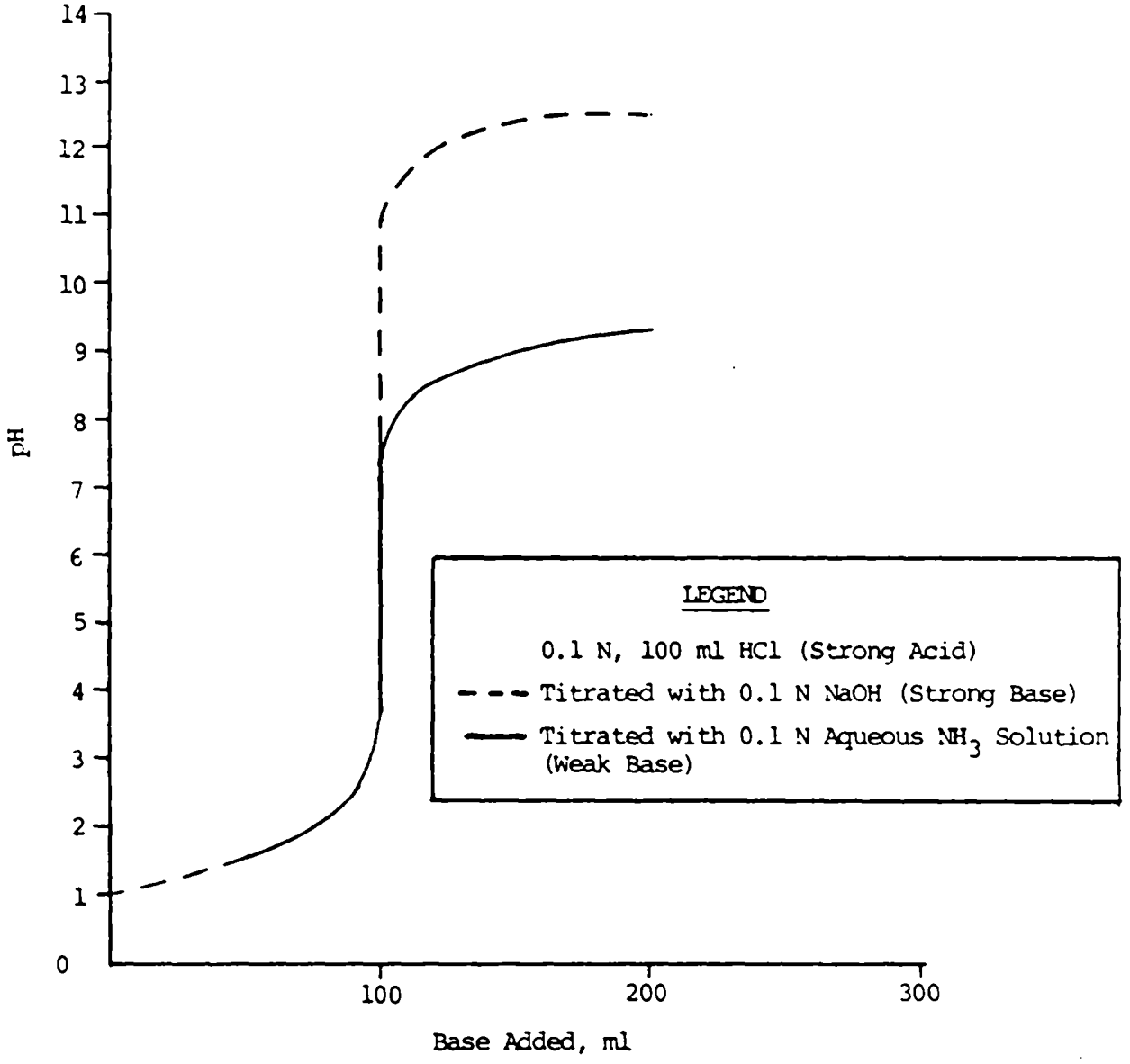

Figure 4-1. Neutralization Curves of 100 ml of HCl (Strong Acid) with NaOH (Strong Base) and Aqueous Ammonia Solution (Weak Base)

An automatic control system reduces excursions and increases reaction effectiveness. A control system measures the pH of the solution and controls the addition of a neutralizing agent to maintain the effluent within the acceptable pH limits of 6-9 or at neutrality; its operation is based on such factors as flow, acid or base strength and method of adding the neutralizing agent (3).

There are two common modes of control--feed forward and feed back. Feed forward control is more useful in the control of pH in waste waters. In this system, a measurement is made of the raw waste and then a computation is made as to the amount of neutralizing agent necessary to produce the desired effect. In the feed back control system, a measurement is made of the effluent pH which is then compared with a reference point. If a difference exists between the actual and the set point, the automatic controller takes corrective action; but, of course, a short period has elapsed with the effluent out of compliance. The following are the modes of control used with the process loop (feed forward or feed back):

1) On-off control
2) Throttling control
3) Proportional control
4) Derivative control
5) Integral control
6) Proportional plus integral control
7) Proportional plus integral plus derivative control action

On-off control systems are generally limited to continuous processes where the waste water flow is relatively small and residence time in the reactor is relatively long (reaction of strong acid or base with weak acid or base). With relatively large flows and short residence times (1/2-3 minutes), other or multimode controls are used (3,4).

4.1.4 Other Factors of Neutralization

Storage and Transfer of Neutralizing Agent - the type of neutralizing agent used dictates the storage and transportation facilities required. Caustic soda can be stored in the open, but quicklime requires closed, waterproof containers. In handling acids or alkalies, appropriate corrosion-proof materials must be used for transportation. Solutions can be delivered with pumps while slurries are transferred using piping, pumps, or open flumes (3).

Required Number of Stages - depends on the pH of the waste water. As a general rule, one stage can be used if the pH of the raw waste water is between 4 and 10. Two stages are often required if the pH is as low as 2 or as high as 10. More than 2 stages are generally required if the pH is less than 2 or greater than 2. In almost all neutralizing reactors, at least one

stirred tank is required and a propeller or axial flow impeller is used for stirring (6).

Size of Neutralizing Vessels - depends on the waste water flow, reaction time, solubility of the reagent, and insoluble precipitates formed from the reaction. The inlet and outlet of the neutralizing vessel should be located on opposite sides, the influent located near the top, and the effluent located near the bottom to reduce dead time (6).

4.2 PLANT pH CONTROL INFORMATION

4.2.1 General

Table 4-2 presents a summary of waste water flow, chemicals used, and pH control system information for all plants visited for pH Assessment in the Inorganic Chemicals Industry.

Flow - The discharged effluent varied from 128 m3/day to 35,734 m3/day. Barometric condenser water used in caustic evaporators in the Chlorine-Caustic Subcategory accounted for the majority of the flow for Plant #150, which had the highest discharged flow. Non-contact cooling water from the acid plants also had higher effluent discharge. At some plants, the inorganic product waste water was combined with other product waste water and was discharged through a single outfall. Flow did not appear to be a factor in the pH control and treatment performance efficiency of the discharged effluent.

Chemicals - Lime was the predominant chemical used, followed by soda ash and sodium bicarbonate for neutralization of acidic waste water. Plant #928 which used lime for neutralization of waste water containing hydrofluoric acid and sulfuric acid had the least excursion duration of all the plants studied for pH assessment. The scaling problem at this plant was solved by using two separate pipelines for discharge. One line was flushed with water while the other one was in operation, and vice versa. Sodium bicarbonate was used by one of the plants for neutralization of acidic waste water. It is expensive, but has good buffering capacity, and the plant using it had reduced the excursion time considerably by its usage. Sulfuric acid and hydrochloric acid were the only chemicals used for neutralization of alkaline waste water.

Treatment System - Only one plant was using biological treatment. Two other plants had the biologically treated organic product waste water combined with the neutralized inorganic product waste water which was discharged through a common outfall. Inclusion of settling ponds after neutralization for some of the plants aided in smoothing out the pH excursions. The presence of a diversion facility at Plant #928 was one of the reasons for its having the best pH compliance record. Plant #786 which interrupted the discharge flow from the pond on observance of an excursion had the second best pH compliance data.

TABLE 4-2. FLOW AND pH CONTROL SYSTEM SUMMARY OF PLANTS REVIEWED FOR pH ASSESSMENT IN THE INORGANIC CHEMICALS INDUSTRY

Plant #	Waste Water Flow, m^3/day	Chemical Used	Amount Used	Treatment System	Control	Other	Subcategory
102	4,201	Lime slurry (as 10% solution)	23 Tons/day	Neutralization and Settling	Feed forward in 1st stage and feed back in 2nd stage	Residence time of waste water in ponds is 30 days	Titanium Dioxide (Chloride Process)
150	35,734	HCl	10,000 lbs/day	Neutralization	Feed forward Feed back	1-3 stages of neutralization. Provision for diversion of flow to a tank.	Hydrochloric and Chlorine-Caustic
491	16,667	Soda ash and Caustic	1000 gal/day (50% conc.)	Neutralization	Manual addition	Process waste water flow is 11.4 m^3/day and is neutralized in 2 stages. The rest of the flow consists of non-contact cooling water.	Sulfuric Acid
586	4,080	Lime	8900 lbs/day	Neutralization, Aeration and Settling	Feed back	3 ponds are used for settling and the residence time of water in each pond is 1 1/2 days.	Sodium Metabisulfite and Sulfur Dioxide
664	25,075*	Sodium Bi-carbonate	140 Tons/yr	Neutralization	N/A	The process waste water (327 m^3/day) from Hydrofluoric subcategory is neutralized with soda ash and discharged through a separate outfall.	Hydrofluoric and Sulfuric Acid
782	7,522**	H_2SO_4 + Caustic soda	N/A	Biological treatment (includes pH adjustment)	N/A	Multiple products are made at this plant. The alkaline and acidic waste water from different manufacturing facilities are combined for neutralization.	Hydrogen Cyanide
786	128	H_2SO_4 (93.2% solution)	60 lbs/day	Neutralization and Settling	Feed back, on-off controller	Residence time is 4-5 days in the settling pond. Effluent discharge is blocked from settling pond on observance of an excursion.	Sodium Silicate
928	600	Lime slurry (10% solution)	10,000 lbs/day	Neutralization + polymer addition + settling in a clarifier	Feed forward	Provision exists for automatic diversion of discharge flow to treatment system outside the 6-9 pH range.	Hydrofluoric Acid and Aluminum Fluoride

* Non-contact cooling water from hydrofluoric acid and sulfuric acid manufacturing facilities.
** Comprised of waste water from hydrogen cyanide and four other organic products.

Control System - One plant was practicing manual addition of neutralizing agent. The waste flow going to the treatment facility was small at the plant; also the neutralization was conducted on a batch mode. All the plants had mixing devices in the reaction tanks. Three plants had the more sophisticated feed forward control for addition of neutralization agent and control of pH in the effluent.

4.2.2 Plant System Review

Plant #102 uses Ilmenite ore or titania slag for preparation of titanium dioxide employing the chloride process. The process waste water from the titanium plant is neutralized with lime in two stages. In the first reactor, the pH is raised to 4.8-5.2. The pH is then raised to 8 in the second reactor. Feedback control is used for lime addition in both the reactors. The effluent from the second reactor is sent to a tailings pond, where it is mixed with other inorganic-product waste water and also with treated organic product waste water. The overflow from the tailings pond is discharged to a creek. Prior to discharge, the outfall is monitored continuously for pH and flow. There is a provision to adjust the pH manually before discharge using caustic soda if the pH of the tailings pond effluent goes outside the 6-9 range. The non-contact cooling water from the TiO_2, inorganic, and the organic product plant is combined and discharged through another, separate outfall. The pH and flow is also monitored for the second outfall before discharge.

Plant #150 makes chlorine and hydrochloric acid. The only wastes that are discharged from the chlorine/caustic facility are non-contact cooling water and barometric condenser water. The other wastes are contained in a pond and evaporated. The only waste water discharged from the HCl plant is non-contact cooling water. In the treatment system, the non-contact cooling waters from HCl and chlorine-caustic are combined and sent to a mixing box. The barometric condenser waters from the caustic-evaporators are neutralized with HCl; during periods when complete neutralization does not occur, waters are diverted to a retention pond and neutralized again. The effluent from the neutralization tank is sent to the mixing box where it mixes with the non-contact cooling waters. In the mixing box, the combined water is neutralized with either HCl or caustic depending on the pH. Chemical addition to the mixing box is operated via a linear-analog controller using feedback control. The effluent from the mixing box is monitored continuously for pH before discharge.

Plant #491 makes sulfuric acid using two sources of raw material. In the first case, sulfur and oxygen are used and the second route consists of recovering acid from the refinery sludge. The plant has a treatment system consisting of a reaction tank and a settling tank. Leaks and spills and the purge acid resulting from the purification of sulfuric acid is sent to the reaction tank where neutralization with caustic takes

place on a batch mode. The reacted effluent goes to a settling tank and then mixes with the non-contact cooling waters before discharge. For non-contact cooling, two types of heat exchangers are used--cascade and shell and tube. In the case of the cascade coolers, the once-through water is collected in a trough that is located at the bottom. A pH monitor placed in the trough monitors the quality of the water, and when the pH goes down, the water in the trough is neutralized manually with soda ash. The non-contact cooling waters are intermixed with the treated waste water and is monitored for pH and flow prior to discharge to the river.

Plant #586 was visited for collection of pH excursion data for the sodium bisulfite subcategory. Plant #586 produces sodium metabisulfite which is a closely related product of sodium bisulfite. The plant also makes an organic product and two other inorganic products. The waste water from the sodium metabisulfite facility is neutralized with lime in a sump and then sent to an aeration tank where it mixes with the biologically treated organic waste water and also the treated (physical-chemical treatment) waste water of the inorganic product. Lime is added in the sump using an automatic feedback system that utilizes an on-off mode of control. In the aeration tank, the sulfites are converted to sulfate. The effluent from the aeration tank travels through two settling ponds and then through a polishing pond before discharge. The continuous pH monitor is located at the discharge point of the polishing pond.

Plant #664 makes hydrofluoric acid and sulfuric acid. The process waste waters from hydrofluoric acid are neutralized with soda ash and sent to the settling pond. A major portion of the effluent is recycled to the process and a small portion is discharged as a purge. The discharged purge is not monitored continuously for pH, but records are kept of the pH from grab samples. According to the plant personnel, the pH never has exceeded the compliance limits.

The non-contact cooling waters from the hydrofluoric acid and sulfuric acid facilities are combined and dicharged through a separate outfall, and the pH is monitored continuously for this outfall. The excursion data was collected for this outfall. When a leak occurs in the coolers and the pH of the non-contact cooling water goes down, a standby automatic sodium bicarbonate system is activated. When the pH goes down, the discharge is routed through the neutralization tank where bicarbonate is added. The bicarbonate acts as a good buffering agent and maintains the pH in the 6-9 limits even when an excess is used. The collected pH excursion data is more representative of sulfuric acid than hydrofluoric acid subcategory.

Plant #782 makes hydrogen cyanide using the Andrussow Process. The waste water from the hydrogen cyanide facility is combined with other organic product waste water and treated in a biological treatment system before discharge, including the runoff and washdown from the manufacturing facilities. The final, treated effluent is monitored continuously for pH before discharge.

Plant #786 makes sodium silicate. The waste water consisting of contact cooling water, non-contact cooling water, boiler blowdown, tank-car washings and rainfall runoff is reacted with sulfuric acid in a sump equipped with a mixer and sent to a settling pond. The effluent from the pond is discharged through a gate. The effluent discharge is monitored for pH and flow. The gate is closed when a pH excursion is observed, blocking the discharge, and is opened when the water returns to the 6-9 pH range.

Plant #928 makes hydrofluoric acid and aluminum fluoride. The waste water from the two facilities are combined and sent to a settling pond, where gypsum and suspended solids are allowed to settle. The overflow goes to another retention pond. The effluent from the retention pond is divided into two portions. The major portion comprising 90-95 percent of the total effluent is routed to the HF and AlF_3 plants for reuse. The minor portion is sent to the treatment system. In the treatment system, it is first neutralized with lime and then sent to a clarifier. The overflow from the clarifier is sent to a holding tank. The tank effluent is discharged to the river through two alternate pipes. One pipeline is used for effluent discharge, while the other one is being cleaned by flushing with river water for scale removal. At the discharge point, the effluent is monitored for flow and pH. There is a provision at the holding tank to divert the flow to the settling pond when the pH of the effluent falls outside the 6-9 pH range.

SECTION 5.0

EXCURSION DATA

5.1 EXCURSION DATA ANALYSIS

The collected data on the duration of pH excursions were divided into two groups based on "actual" and "non-actual" reasons. The non-actual excursions resulted from instrument calibration, instrument and diversion operations. In the case of excursions resulting from diversion operations, the instrument gave pH readings even when the flow was blocked or diverted to a pond/ treatment system because of the location of the pH probe. During the time the pH recording instrument was displaying this non-actual excursion, the effluent was within the pH compliance limit or was not discharged. The actual excursions were caused by either process upset, treatment system malfunction, operator error, storm water runoff, and spills and leaks. All the excursion reasons have been explained earlier in Section 3.3. Eight plants were visited for collection of pH excursion data in the inorganic chemicals industry and the raw data is given in the Appendix.

Table 5-1 is a summary of the duration of excursions of actual excursions of the 8 plants reviewed for pH compliance. Similar values for all excursions (real plus non-actual) are given in Table 5-2. The blank or empty spaces in the tables indicate that no excursion was observed for a certain plant for the corresponding row--reason. The range of total actual excursions varied from 0.004 to 2.04 percent (of total time). The treatment system of Plant #102 which discloses the highest excursion duration (2.06%) has recently been modified. The majority of the excursions resulted from the treated organic product waste water, which is intermixed with the inorganic subcategory waste water before discharge. The pH monitor is installed at the discharge point. The total excursion duration value shown for Plant #102, therefore, is not a true representative value for that subcategory. If Plant #102 data is excluded, then the total actual excursion duration varies from 0.004% to 0.63% with an average value of 0.255 percent.

Table 5-3 and Table 5-4 present a breakdown of actual and total excursions by pH range. The instrument showed extreme pH values for some non-actual excursions resulting from poor instrument calibration or breakdown. The majority of the actual excursions fell into the 5-6 pH range, and one plant (#586) had all of its actual excursions in that range. About 80 percent of the actual excursions fell into the pH 3-11 range.

Tables 5-5 and 5-6 give a summary of the average time duration of actual unit pH excursion and percentage distribution of number of actual pH excursions by plant and by excursion reasons. The total average duration of actual excursions varied from 7.5 minutes to 515 minutes, and treatment system malfunction accounted for the majority of actual resulting excursions. Table 5-7 is a summary of the total time and total number of actual excursions for different duration periods for the 8 plants. Of all the duration periods, the first duration period (0-15 minutes) had the highest number of excursions. The long duration excursions can be reduced by diverting the effluent flow to either a pond, holding tank, or to the neutralization reactor. If the effluent is discharged from a settling pond, the flow can also be blocked until the pH in the pond returns to the normal discharge limits of 6-9. The average pH and standard deviation values of actual excursions for both alkaline pH excursions (pH greater than 9) and acidic pH excursions (pH less than 6) for the plants assessed for pH control are given in Table 5-8.

5.2 PLANT COMPLIANCE OF pH

The number of pH excursions by reason, by pH, by duration range, and by number are given in Tables 5-9 through 5-13 for Plant #102. The actual excursion duration (based on total time period) is high. The treated waste water is intermixed with the treated organic product waste in the pond before discharge. Increased biodegradation of organic product waste water in the past led to a lowering of the pH in the pond. The pond effluent, during that period, had to be manually adjusted for pH before discharge. Control of pH by manual addition of neutralizing agent is not always possible, and this led to some excursions. All the excursion values are in the 3-11 range as indicated in Table 5-10, and more than 80 percent of the excursions resulted from the treatment system malfunction as shown in Table 5-9. The treatment system has been modified recently. Since then, few excursions have resulted. Since the majority of excursions resulted from the low pH of organic product effluent, the percent excursion figure is not representative of the inorganic subcategory.

Tables 5-14 through 5-18 give a summary of pH excursion breakdowns by reason, pH, etc., for Plant #150. This plant had the largest number of excursions, but the durations of these excursions were small. The average duration of actual unit excursion was 11.5 minutes, and the plant ranks better in the total percent excursion time. The majority of excursions resulted from process or treatment upsets in the chlor-alkali area of the plant. Major process relocations and additions are taking place at the plant and this accounted for part of the upsets resulting in excursions. All the excursions for this plant lie in the 2-11 pH range.

The excursion distribution arranged for Plant #491 are given in Tables 5-19 through 5-23. The plant has a good pH compliance record. Treatment system upset accounted for the major percentage of the excursions at this plant. When a leak is detected in the cascade coolers used in the manufacturing facility, the water is neutralized manually in the trough placed at the bottom of the cascade coolers. Complete neutralization at all times is not possible with manual addition of the alkali, and no mixing device exists that can enhance better reaction. The plant has plans to modify the treatment system to improve effluent pH compliance.

The excursion values for Plant #664 are given in Tables 5-24 through 5-28. The plant has a good compliance record and has only 0.09 percent time actual excursions. The standby bicarbonate system for leaks and spills was installed in January, 1979 and some of the excursions from leaks and spills occurred prior to the installation of the treatment system. The other actual excursions resulted from the bicarbonate holding tank being empty. If the above excursions are neglected, then the plant has a near-perfect pH compliance record.

Tables 5-29 through 5-33 give excursion values for Plant #586. The plant has a good pH compliance record. It has only 2 actual excursions resulting from unknown reasons. The continuous monitoring charts, when reviewed, showed these two excursions and since no explanation was given on the charts, they were assumed to be actual reasons. The plant also collects grab samples, analyzes for pH, and the data is kept in a log-book. No excursions were observed in the log-book at the time the two excursions were noticed in the continuous monitoring charts. The excursions might have resulted from a pH instrument giving wrong readings. If this is assumed to be the case, then the plant has 100 percent time pH compliance, not counting the non-actual or apparent excursions. One of the reasons the plant has high or complete pH compliance in spite of intermixing with other product effluents is the inclusion of settling ponds in the treatment system. The ponds aid in smoothing out small excursions.

The pH excursion analysis summary for Plant #782 is given in Tables 5-34 through 5-38. The actual excursions rank low to average except for the month of March, 1979 (see Table 5-36) during which heavy rainfall caused many problems. The plant is located in a region which has a high rate of precipitation and is occasionally susceptible to storms. Rain overflow is one of the frequent causes of pH excursions at this plant. In spite of a combined waste water treatment system, the plant has a fair pH compliance record for the effluent. The control of pH is vital to the treatment process to insure the life of the bacteria used.

Very few plants use biological treatment for inorganic waste water and, hence, this plant is not typical of the inorganic industry. The plant was visited because it was the only plant in the HCN subcategory that had continuous pH monitoring charts available for review, and also, it was discharging to surface waters. The plant's data is more representative of the few

plants in the inorganic industry that use biological treatment of waste waters.

The pH excursion breakdown by reason, by pH, and by number are given in Tables 5-39 through 5-43 for Plant #786. The plant has a good pH compliance performance history of the discharged effluent. The actual excursions comprise 0.09 percent of the total time. The good compliance standards are achieved by blocking off the pond discharge on observing an excursion. The waste water is held in the settling pond to smooth out the excursions, instead of being diverted.

The excursion summary for Plant #928 is given in Tables 5-44 through 5-48. Plant #928 has the best compliance data of all the plants visited, in spite of using lime for neutralization. The total time in actual excursions at this plant was only 0.04 percent. The effluent waste water going to the neutralization tank has a pH of approximately 1.5 and is raised to 7.5-8.0 in the neutralization tank by having precise lime addition control facilities. The plant has a lot of apparent excursions because of the probe getting covered with calcium-sulfate precipitate. The pH probe is cleaned every other day and is replaced once every 2 months. The majority of non-actual excursions resulted from calibration and instrument errors. One of the reasons the plant has near-perfect compliance records is because of the presence of diversion facilities.

TABLE 5-1. SUMMARY OF EXCURSION DURATION BREAKDOWN BY ACTUAL EXCURSION REASONS

Excursion Reason	Percent of Total Time in Actual Excursion							
	Plant # 102	Plant # 150	Plant # 491	Plant # 586	Plant # 664	Plant # 782	Plant # 786	Plant # 928
Treatment System Upset/Shutdown	.91	.14	.09		.01	.44	.07	.004
Process Upset	.99	.18						
Spills or Leaks	.12	.06	.08		.08	.1		
Storm Water Runoff	.04	.001				.22		
Emergency Operation						.06	.02	
Operator Error		.14						
Other (Actual)		.009	.008			.01	.001	
Unknown		.13	.001	.18	.001	.007		
Total of All Actual Excursion Reasons	2.06	.6	.18	.18	.09	.63	.09	.004
Total Time in Excursions, Minutes	14,427	1,558	1,032	900	266	3,389	377	15
Total Time in Monitoring, Minutes	701,280	260,640	567,360	484,020	305,280	535,680	437,760	337,560

TABLE 5-2. PERCENTAGE DISTRIBUTION OF TOTAL pH EXCURSION TIME BY REASON AND PLANT

Excursion Reason	Percent of Total Time in Excursion							
	Plant #102	Plant #150	Plant #491	Plant # 586	Plant # 664	Plant # 782	Plant # 786	Plant # 928
A) Non-Actual								
Instrument Error		.1	.12	.82	.1	.14	.12	.36
Instrument Calibration		.008	.02	.27	.01	.02	.007	.97
Diversion/ Interruption							1.32	.70
Other (non-actual)		.002	.45		.001	.52		.001
B) Actual								
Treatment System Upset/ Shutdown	.91	.14	.09		.01	44	.07	.004
Process Upset	.99	.18						
Spills or Leaks	.12	.06	.08		.08	.1		
Storm Water Runoff	.04	.001				.22		
Emergency Operation						.06	.02	
Operator Error		.14						
Other (Actual)		.009	.008			.01	.001	
Unknown	—	.13	.001	.18	.001	.007	—	—
Total of All Excursion Reasons (A+B)	2.06	.71	.77	1.27	.2	1.32	1.54	1.76
Total Time in Excursion, Minutes	14,427	1,844	4,365	6,209	601	7,068	6,721	5,948
Total Time in Monitoring, Minutes	701,280	260,640	567,360	484,020	305,280	535,680	437,760	337,560

TABLE 5-3. PERCENTAGE DISTRIBUTION OF ACTUAL pH EXCURSIONS BY pH RANGE AND PLANTS

pH Excursion Range	Percent of Total Time in Actual Excursion							
	Plant # 102	Plant # 150	Plant # 491	Plant # 586	Plant # 664	Plant # 782	Plant # 786	Plant # 928
0-0.9			.008		.05	.18		
1-1.9			.01			.03		
2-2.9		.04	.01			.07		
3-3.9	.12	.18	.04			.05		
4-4.9	.07	.06	.006		.001	.03		.001
5-5.9	.51	.03	.05	.18	.004	.12	.08	.003
9-9.9	.28	.24	.01		.004	.09	.005	
10-10.9	1.07	.05	.06		.003	.07		
11-11.9								
12-12.9					.003			
13-14					.02			
Total Actual Excursion of all pH ranges	2.06	.6	.19	.18	.09	.63	.09	.004
Total Time in Excursion, Minutes	14,427	1,558	1,032	900	266	3,389	377	15
Total Time in Monitoring, Minutes	701,280	260,640	567,360	484,020	305,280	535,680	437,760	337,560

TABLE 5-4. PERCENTAGE DISTRIBUTION OF pH EXCURSIONS BY pH RANGE AND PLANTS

pH Excursion Range	Percent of Total Time in Excursion							
	Plant # 102	Plant # 150	Plant # 491	Plant # 586	Plant # 664	Plant # 782	Plant # 786	Plant # 928
0-0.9			.02	.001	.14	.54		.22
1-1.9			.4		.003	.03		.07
2-2.9		.04	.02		.003	.07		.003
3-3.9	.12	.25	.06	.004	.0003	.05	.001	.39
4-4.9	.07	.06	.04	.002	.006	.05	.11	.03
5-5.9	.51	.03	.11	1.26	.005	.13	.97	.83
9-9.9	.28	.26	.03	.02	.009	.15	.45	.007
10-10.9	1.07	.07	.1	.002	.005	.31	.001	.006
11-11.9							.001	.005
12-12.9					.004			.009
13-14					.02			.19
Total Excursion of all pH ranges	2.06	.71	.77	1.28	.2	1.32	1.54	1.76
Total Time in Excursions, Minutes	14,427	1,844	4,365	6,209	601	7,068	6,721	5,948
Total Time in Monitoring, Minutes	701,280	260,640	567,360	484,020	305,280	535,680	437,760	337,560

TABLE 5-5. AVERAGE DURATION OF pH EXCURSIONS BY PLANT AND BY EXCURSION REASON

Excursion Reason	Average Duration of pH Excursions, Minutes/Excursion							
	Plant # 102	Plant # 150	Plant # 491	Plant # 586	Plant # 664	Plant # 782	Plant # 786	Plant # 928
A) Actual Excursions								
Treatment System Upset/Shutdown	276	9	28.9		3.3	147.2	73.8	7.5
Process Upset	3480	17						
Spills or Leaks	412.5	26.8	25.5		13.4	77.1		
Operator Error		9.7						
Storm Water Runoff	300	3				65		
Emergency Operation						165	75	
Other (Actual)		5.7	45			75	3.5	
Unknown		15.6	3.5	450	2	5.6		
Average of Actual Excursion Reasons	515	11.5	26.5	450	10.2	89.2	53.9	7.5
B) Non-Actual Excursions								
Instrument Error		25.9	14.0	798.6	27.5	148.4	105	57.8
Instrument Calibration		11	4.0	263.2	2.0	24.4	4.9	21.9
Diversion/ Interruption							826.4	112
Other (Non-Actual)		5	68.8		5.0	402		2
Average of all Non-Actual Excursion Reasons		22	29.76	530.9	12.88	216.41	333.89	31.9
C) Average of All Excursions	515	12.5	28.91	517	11.55	128.5	258.5	31.64

TABLE 5-6. PERCENTAGE DISTRIBUTION OF NUMBER OF pH EXCURSIONS BY PLANT AND BY EXCURSION REASONS

Excursion Reason	Percent of Total Number of Excursions							
	Plant # 102	Plant # 150	Plant # 491	Plant # 586	Plant # 664	Plant # 782	Plant # 786	Plant # 928
A) Actual Excursions								
Treatment System Upset/Shutdown	82.1	29.63	46.1		26.9	42.0	57.1	100
Process Upset	7.1	20.00						
Spills or Leaks	7.1	4.44	46.1		69.2	18.4		
Operator Error		28.89						
Storm Water Runoff	3.6	0.70				47.4		
Emergency Operation						5.3	14.3	
Other (Actual)		2.96	2.6			2.6	28.6	
Unknown		16.29	5.1	100	3.8	18.4		
Total of all Actual Excursion Reasons	100.0	*	100.0	100	100.0	*	100.0	100
B) Non-Actual Excursions								
Instrument Error		76.93	43.76	50	42.3	29.41	26.32	11.17
Instrument Calibration		15.38	23.21	50	53.85	29.41	36.84	79.78
Diversion/ Interruption							36.84	11.17
Other (Non-Actual)		7.69	33.03		3.85	41.18		1.06
Total of all Non-Actual Excursion Reasons		100.0	100.0	100	100.0	100.0	100.0	*

* The total percentage is greater than 100 because of duplication of certain number of excursions in different excursion reasons. This resulted from one excursion reason leading to another.

TABLE 5-7. EXCURSION BREAKDOWN SUMMARY BY DURATION TIME (ACTUAL EXCURSIONS ONLY)

Excursion Duration Range, Minutes	Total Time of Actual Excursions, Minutes								Total No. of Actual Excursions							
	Plant # 102	Plant # 150	Plant # 491	Plant # 586	Plant # 664	Plant # 782	Plant # 786	Plant # 928	Plant # 102	Plant # 150	Plant # 491	Plant # 586	Plant # 664	Plant # 782	Plant # 786	Plant # 928
0- 15	22	672	177	—	96	134	32	15	6	116	20	—	22	14	4	2
16- 30	20	178	255	—	45	100	—	—	1	8	10	—	2	4	—	—
31- 60	130	392	330	—	35	40	—	—	3	9	7	—	1	1	—	—
61- 120	770	106	90	—	90	1080	135	—	8	1	1	—	1	12	2	—
121- 240	300	210	180	240	—	775	210	—	2	1	1	1	—	5	1	—
241- 480	975	—	—	—	—	270	—	—	3	—	—	—	—	1	—	—
481- 960	540	—	—	660	—	—	—	—	1	—	—	1	—	—	—	—
961-1920	1110	—	—	—	—	990	—	—	1	—	—	—	—	1	—	—
1921-3840	10560	—	—	—	—	--	—	—	3	—	—	—	—	—	—	—
Total of all Duration Ranges	14427	1558	1032	900	266	3389	377	15	28	135	39	2	26	38	7	2

TABLE 5-7 - continued

Excursion Duration Range, Minutes	Average Length of Unit Actual Excursion								% of Total Time of Actual Excursion							
	Plant # 102	Plant # 150	Plant # 491	Plant # 586	Plant # 664	Plant # 728	Plant # 786	Plant # 928	Plant # 102	Plant # 150	Plant # 491	Plant # 586	Plant # 664	Plant # 728	Plant # 786	Plant # 928
0- 15	3.66	5.8	8.8	—	4.4	9.6	8	3.7	0.15	43.13	17.15	—	36.09	3.95	8.49	100
15- 30	20	22.3	25.5	—	22.5	25	—	—	0.14	11.42	24.71	--	16.92	2.95	—	—
30- 60	43.3	43.6	47.1	—	35	40	—	—	0.9	25.16	31.98	—	13.16	1.18	—	—
60- 120	96.3	106	90	—	90	90.1	67.5	67.5	5.34	6.80	8.72	—	33.83	31.87	35.81	—
120- 240	150	210	180	240	—	155	210	210	2.08	13.48	17.44	26.67	—	22.87	55.7	—
240- 480	325	—	—	—	—	270	—	—	6.76	—	—	—	—	7.97	—	—
480- 960	540	—	—	660	—	—	—	—	3.74	—	—	73.33	—	—	—	—
960-1920	1110	—	—	—	—	990	—	—	7.69	—	—	—	—	29.21	—	—
1921-3840	3520	—	—	—	—	—	—	—	73.2	—	—	—	—	—	—	—

TABLE 5-8. DISTRIBUTION OF AVERAGE pH AND STANDARD DEVIATION VALUES OF ACTUAL pH EXCURSIONS BY PLANT

Plant #	Alkaline pH Excursion (pH > 9.1)		Acidic pH Excursion (pH < 5.9)	
	Average pH Value	Standard Deviation	Average pH Value	Standard Deviation
102	9.65	0.47	4.45	0.922
150	9.31	0.366	4.12	0.879
491	9.86	0.234	3.77	1.663
586	--	--	5.8	0.141
664	11.69	2.217	1.91	2.537
782	9.67	0.405	3.84	1.529
786	9.27	0.115	5.7	0.283
928	--	--	4.85	0.354

TABLE 5-9. EXCURSION DURATION BREAKDOWN BY ALL AND ACTUAL EXCURSION REASONS FOR PLANT # 102

Excursion Reason	Total Time in Monitoring, Minutes X	Time in Excursion, Minutes Y	Percent of Total Excursion Time	Percent of Total Monitoring Time in Excursion (Y/X x 100)
	701,280			
A) Actual Excursions				
Treatment System Upset/Shutdown		6342	44.0	0.91
Process Upset		6960	48.3	0.99
Spills or Leaks		825	5.7	0.12
Operator Error				
Storm Water Runoff		300	2.0	0.04
Emergency Operation				
Other (Actual)				
Unknown				
Total Actual Excursions (A)		14427	100.00	2.06
B) Non-Actual Excursions				
Instrument Error				
Instrument Calibration				
Diversion/ Interruption				
Other (Non-Actual)				
Total Non-Actual Excursions (B)				
C) Total Actual Plus Non-Actual Excursions (A + B)		14427		2.06

TABLE 5-10. ALL AND ACTUAL EXCURSION BREAKDOWN FOR PLANT #102 BY pH RANGE

	Period Covered, Minutes	Time		% of All Excursions		% of Total Time Period	
		All Excursions, Minutes	Actual Excursions, Minutes	All Excursions	Actual Excursions	All Excursions	Actual Excursions
Total	701,280	14,427	14,427	100	100	2.06	2.06
pH Excursion Range							
0-0.9							
1-1.9							
2-2.9							
3-3.9		825	825	5.72	5.72	0.12	0.12
4-4.9		525	525	3.64	3.64	0.07	0.07
5-5.9		3,600	3,600	24.95	24.95	0.51	0.51
9-9.9		1,987	1,987	13.77	13.77	0.28	0.28
10-10.9		7,490	7,490	51.92	51.92	1.07	1.07
11-11.9							
12-12.9							
13-14							

TABLE 5-11. DISTRIBUTION OF ACTUAL pH EXCURSION TIME BY MONTH AND BY DURATION RANGE FOR PLANT #102

Excursion Duration Range, Minutes	Total Monitoring Time, Minutes (A)	Time in Actual Excursion in Minutes During the Month of																				
		Jan 1978	Feb 1978	Mar 1978	Apr 1978 (B)	May 1978	Jun 1978	Jul 1978	Aug 1978 (C)	Sep 1978 (D)	Oct 1978	Nov 1978 (E)	Dec 1978	Jan 1979 (F)	Feb 1979 (G)	Mar 1979 (H)	Apr 1979	May 1979	Jun 1979 (I)	Jul 1979 (J)	Aug 1979	Sep 1979
	701,280																					
0- 15																			8	14		
16- 30																			20			
31- 60																			45	85		
61- 120									85						85					600		
121- 240																			150	150		
241- 480														390		585						
481- 960												540										
961-1920										1110												
1921-3840					3600					3360									3600			
Total Time in Excursion					3600				85	4470		540		390	85	585			3823	849		

TABLE 5-12. PERCENTAGE DISTRIBUTION OF ACTUAL pH EXCURSION TIME BY MONTH AND BY DURATION RANGE FOR PLANT #102

Excursion Duration Range, Minutes	Percent of Total Time in Actual Excursion *																					
	Jan 1978	Feb 1978	Mar 1978	Apr 1978 (B/A x 100)	May 1978	Jun 1978	Jul 1978	Aug 1978 (C/A x 100)	Sep 1978 (D/A x 100)	Oct 1978	Nov 1978 (E/A x 100)	Dec 1978	Jan 1979 (F/A x 100)	Feb 1979 (G/A x 100)	Mar 1979 (H/A x 100)	Apr 1979	May 1979	Jun 1979 (I/A x 100)	Jul 1979 (J/A x 100)	Aug 1979	Sep 1979
0- 15																		.001	.002		
16- 30																		.003			
31- 60																		.006	.012		
61- 120								.012						.012					.085		
121- 240																		.021	.021		
241- 480													.055		.083						
481- 960											.077										
961-1920									.158												
1921-3840				.513					.479									.513			
Percentage of Total Time in Actual Excursion for the Month of				.513				.012	.637		.077		.055	.012	.083			.545	.121		

* Refer to Table 5-11 for Actual Excursion Time used as a basis for calculating the percentages.

TABLE 5-13. TIME AND NUMBER OF EXCURSIONS BREAKDOWN BY ACTUAL AND NON-ACTUAL REASONS FOR PLANT # 102

Excursion Reason	Total Time in Monitoring, Minutes (X)	Number of Excursions (Y)	Total Time of Excursions Minutes (Z)	Average Duration of Unit Excursion Minutes/Excur. (Z/Y)	Percent of Total Number of Excursions
	701,280				
A) Actual Excursions					
Treatment System Upset/Shutdown		23	6342	276	82.1
Process Upset		2	6960	3480	7.1
Spills or Leaks		2	825	412.5	7.1
Operator Error					
Storm Water Runoff		1	300	300	3.6
Emergency Operation					
Other (Actual)					
Unknown					
Total Actual Excursions (A)		28	14427	515	100.0
B) Non-Actual Excursions					
Instrument Error					
Instrument Calibration					
Diversion/ Interruption					
Other (Non-Actual)					
Total Non-Actual Excursions (B)					
C) Total Actual Plus Non-Actual Excursions (A + B)		28	14427	515	

TABLE 5-14. EXCURSION DURATION BREAKDOWN BY ALL AND ACTUAL EXCURSION REASONS FOR PLANT #150

Excursion Reason	Total Time in Monitoring, Minutes X	Time in Excursion, Minutes Y	Percent of Total Excursion Time	Percent of Total Monitoring Time in Excursion (Y/X x 100)
	260,640			
A) Actual Excursions				
Treatment System Upset/Shutdown		360	23.10	0.14
Process Upset		459 (1)	29.46	0.18
Spills or Leaks		161 (2)	10.33	0.06
Operator Error		380 (1) (2)	24.39	0.14
Storm Water Runoff		3	0.19	0.001
Emergency Operation				
Other (Actual)		23	1.48	0.009
Unknown		344	22.08	0.13
Total Actual Excursions (A)		1558 (3)		0.60
B) Non-Actual Excursions				
Instrument Error		259	90.56	0.1
Instrument Calibration		22	7.69	0.008
Diversion/ Interruption				
Other (Non-Actual)		5	1.75	0.002
Total Non-Actual Excursions (B)		286	100.00	0.11
C) Total Actual Plus Non-Actual Excursions (A + B)		1844		0.71

(1) 66 minutes duplication in Process Upset and Operator Error Excursion Reasons.

(2) 106 minutes duplication in Operator Error and Spills or Leaks Excursion Reasons.

(3) Is the actual total excursion time after subtraction of duplication time.

TABLE 5-15. ALL AND ACTUAL EXCURSION BREAKDOWN
FOR PLANT # 150 BY pH RANGE

	Period Covered, Minutes	Time		% of All Excursions		% of Total Time Period	
		All Excursions, Minutes	Actual Excursions, Minutes	All Excursions	Actual Excursions	All Excursions	Actual Excursions
Total	260,640	1844	1558	100	84.5	0.71	0.6
pH Excursion Range							
0-0.9							
1-1.9							
2-2.9		107	107	5.80	5.80	0.04	0.04
3-3.9		645	468	34.98	25.38	0.25	0.18
4-4.9		164	161	8.89	8.73	0.06	0.06
5-5.9		84	75	4.55	4.07	0.03	0.03
9-9.9		673	621	36.5	33.68	0.26	0.24
10-10.9		171	126	9.27	6.83	0.07	0.05
11-11.9							
12-12.9							
13-14							

TABLE 5-16. DISTRIBUTION OF ACTUAL pH EXCURSION TIME BY MONTH AND BY DURATION RANGE FOR PLANT # 150

Excursion Duration Range, Minutes	Total Monitoring Time, Minutes (A)	Time in Actual Excursion in Minutes During the Month of											
		Oct 1978 (B)	Nov 1978 (C)	Dec 1978 (D)	Jan 1979 (E)	Feb 1979 (F)	Mar 1979 (G)	Apr 1979 (H)	May 1979 (I)	Jun 1979 (J)	Jul 1979 (K)	Aug 1979 (L)	Sep 1979 (M)
	260,640												
0- 15					9	38	275	94	111	145			
16- 30					19	42	55	24	16	22			
31- 60						47	71	37		237			
61- 120							106						
121- 240										210			
241- 480													
481- 960													
961-1920													
1921-3840													
Total Time in Excursion					28	127	507	155	127	614			

TABLE 5-17. PERCENTAGE DISTRIBUTION OF ACTUAL pH EXCURSION BY MONTH AND BY DURATION RANGE FOR PLANT # 150

Excursion Duration Range, Minutes	Percent of Total Time in Actual Excursion *											
	Oct 1978 (B/A x 100)	Nov 1978 (C/A x 100)	Dec 1978 (D/A x 100)	Jan 1979 (E/A x 100)	Feb 1979 (F/A x 100)	Mar 1979 (G/A x 100)	Apr 1979 (H/A x 100)	May 1979 (I/A x 100)	Jun 1979 (J/A x 100)	Jul 1979 (K/A x 100)	Aug 1979 (L/A x 100)	Sep 1979 (M/A x 100)
0- 15						.105	.036	.042	.055			
16- 30				.003	.014	.021	.009	.006	.008			
31- 60				.007	.016	.027	.014		.091			
61- 120					.018	.041						
121- 240									.081			
241- 480												
481- 960												
961-1920												
1921-3840												
Percentage of Total Time in Actual Excursion for the Month of				.01	.048	.194	.059	.049	.235			

* Refer to Table 5-16 for Actual Excursion Time values used as a basis for calculating the percentages.

TABLE 5-18. TIME AND NUMBER OF EXCURSIONS BREAKDOWN BY ACTUAL AND NON-ACTUAL REASONS FOR PLANT # 150

Excursion Reason	Total Time in Monitoring, Minutes (X)	Number of Excursions (Y)	Total Time of Excursions Minutes (Z)	Average Duration of Unit Excursion Minutes/Excur. (Z/Y)	Percent of Total Number of Excursions
	260,640				
A) Actual Excursions					
Treatment System Upset/Shutdown		40	360	9	29.63
Process Upset		27 (1)	459 (3)	17	20.00
Spills or Leaks		6 (2)	161 (4)	26.8	4.44
Operator Error		39 (1) (2)	380 (3) (4)	9.7	28.89
Storm Water Runoff		1	3	3	0.70
Emergency Operation					
Other (Actual)		4	23	5.7	2.96
Unknown		22	344	15.6	16.29
Total Actual Excursions (A)		135 (5)	1558 (6)	11.5	*
B) Non-Actual Excursions					
Instrument Error		10	259	25.9	76.93
Instrument Calibration		2	22	11	15.38
Diversion/ Interruption					
Other (Non-Actual)		1	5	5	7.69
Total Non-Actual Excursions (B)		13	286	22	100.0
C) Total Actual Plus Non-Actual Excursions (A + B)		148	1844	12.5	

TABLE 5-18 - continued

(1) Duplication of 3 excursions in excursion reasons Process Upset and Operator Error.

(2) Duplication of 1 excursion in excursion reasons Operator Error and Spills and Leaks.

(3) 66 minutes duplication in excursion reasons Process Upset and Operator Error.

(4) 106 minutes duplication in excursion reasons Operator Error and Spills and Leaks.

(5) Is the total number of actual excursions after subtraction of duplicate excursions.

(6) Is the total actual excursion time after subtraction of duplicate excursion time.

* The total percent is greater than 100 because of duplication of some of the excursions.

TABLE 5-19. EXCURSION DURATION BREAKDOWN BY ALL AND ACTUAL EXCURSION REASONS FOR PLANT #491

Excursion Reason	Total Time in Monitoring, Minutes X	Time in Excursion, Minutes Y	Percent of Total Excursion Time	Percent of Total Monitoring Time in Excursion (Y/X x 100)
	567,360			
A) Actual Excursions				
Treatment System Upset/Shutdown		520	50.39	0.09
Process Upset				
Spills or Leaks		460	44.57	0.08
Operator Error				
Storm Water Runoff				
Emergency Operation				
Other (Actual)		45	4.36	0.008
Unknown		7	0.68	0.001
Total Actual Excursions (A)		1032	100.00	0.18
B) Non-Actual Excursions				
Instrument Error		685	20.55	0.12
Instrument Calibration		104	3.12	0.02
Diversion/ Interruption				
Other (Non-Actual)		2544	76.33	0.45
Total Non-Actual Excursions (B)		3333	100.00	0.59
C) Total Actual Plus Non-Actual Excursions (A + B)		4365		0.77

TABLE 5-20. ALL AND ACTUAL EXCURSION BREAKDOWN FOR PLANT #491 BY pH RANGE

	Period Covered, Minutes	Time		% of All Excursions		% of Total Time Period	
		All Excursions, Minutes	Actual Excursions, Minutes	All Excursions	Actual Excursions	All Excursions	Actual Excursions
Total	567,360	4365	1032	100	23.54	.77	.18
pH Excursion Range							
0-0.9		127	45	2.91	1.03	.02	.008
1-1.9		2252	55	51.59	1.26	.4	.01
2-2.9		91	55	2.08	1.26	.02	.01
3-3.9		3.6	210	7.24	4.81	.06	.04
4-4.9		220	35	5.04	.80	.04	.006
5-5.9		614	272	14.07	6.23	.11	.05
9-9.9		169	75	3.87	1.72	.03	.01
10-10.9		576	285	13.19	6.53	.1	.05
11-11.9		—	—				
12-12.9		—	--				
13-14		—	—				

TABLE 5-21. DISTRIBUTION OF ACTUAL pH EXCURSION TIME BY MONTH AND BY DURATION RANGE FOR PLANT # 491

Excursion Duration Range, Minutes	Total Monitoring Time, Minutes (A)	Time in Actual Excursion in Minutes During the Month of												
		Jul 1978 (B)	Aug 1978 (C)	Sep 1978 (D)	Oct 1978 (E)	Nov 1978 (F)	Dec 1978 (G)	Jan 1979 (H)	Feb 1979 (I)	Mar 1979 (J)	Apr 1979 (K)	May 1979 (L)	Jun 1979 (M)	Jul 1979 (N)
	567,360													
0- 15			5	2	10			40	20	40	60			
16- 30					20			40	105		60		30	
31- 60		165							40	45	35			45
61- 120											90			
121- 240							180							
241- 480														
481- 960														
961-1920														
1921-3840														
Total Time in Excursion		165	5	2	30		180	80	165	85	245		30	45

TABLE 5-22. PERCENTAGE DISTRIBUTION OF ACTUAL pH EXCURSION BY MONTH AND BY DURATION RANGE FOR PLANT #491

Excursion Duration Range, Minutes	Percent of Total Time in Actual Excursion *												
	Jul 1978 (B/A x 100)	Aug 1978 (C/A x 100)	Sep 1978 (D/A x 100)	Oct 1978 (E/A x 100)	Nov 1978 (F/A x 100)	Dec 1978 (G/A x 100)	Jan 1979 (H/A x 100)	Feb 1979 (I/A x 100)	Mar 1979 (J/A x 100)	Apr 1979 (K/A x 100)	May 1979 (L/A x 100)	Jun 1979 (M/A x 100)	Jul 1979 (N/A x 100
0- 15		.001	.0003	.002			.007	.003	.007	.01			
16- 30				.003			.007	.018		.01		.005	
31- 60	.029							.007	.008	.006			.008
61- 120										.016			
121- 240						.032							
241- 480													
481- 960													
961-1920													
1921-3840													
Percentage of Total Time in Actual Excursion for the Month of	.029	.001	.0003	.005		.032	.014	.029	.015	.042		.005	.008

* Refer to Table 5-21 for Actual Excursion Time values used as a basis for calculating the percentages.

TABLE 5-23. TIME AND NUMBER OF EXCURSIONS BREAKDOWN BY ACTUAL AND NON-ACTUAL REASONS FOR PLANT # 491

Excursion Reason	Total Time in Monitoring, Minutes (X)	Number of Excursions (Y)	Total Time of Excursions Minutes (Z)	Average Duration of Unit Excursion Minutes/Excur. (Z/Y)	Percent of Total Number of Excursions
	567,360				
A) Actual Excursions					
Treatment System Upset/Shutdown		18	520	28.9	46.1
Process Upset					
Spills or Leaks		18	460	25.5	46.1
Operator Error					
Storm Water Runoff					
Emergency Operation					
Other (Actual)		1	45	45.0	2.6
Unknown		2	7	3.5	5.1
Total Actual Excursions (A)		39	1032	26.5	100.0
B) Non-Actual Excursions					
Instrument Error		49	685	14.0	43.76
Instrument Calibration		26	104	4.0	23.21
Diversion/ Interruption					
Other (Non-Actual)		37	2544	68.8	33.03
Total Non-Actual Excursions (B)		112	3333	29.76	100.0
C) Total Actual Plus Non-Actual Excursions (A + B)		151	4365	28.91	

TABLE 5-24. EXCURSION DURATION BREAKDOWN BY ALL AND ACTUAL EXCURSION REASONS FOR PLANT # 664

Excursion Reason	Total Time in Monitoring, Minutes X	Time in Excursion, Minutes Y	Percent of Total Excursion Time	Percent of Total Monitoring Time in Excursion (Y/X x 100)
	305,280			
A) Actual Excursions				
Treatment System Upset/Shutdown		23	8.65	0.01
Process Upset				
Spills or Leaks		241	90.60	0.08
Operator Error				
Storm Water Runoff				
Emergency Operation				
Other (Actual)				
Unknown		2	0.75	0.001
Total Actual Excursions (A)		266	100.00	0.09
B) Non-Actual Excursions				
Instrument Error		302	90.15	0.1
Instrument Calibration		28	8.36	0.01
Diversion/ Interruption				
Other (Non-Actual)		5	1.49	0.002
Total Non-Actual Excursions (B)		335	100.00	0.112
C) Total Actual Plus Non-Actual Excursions (A + B)		601		0.202

TABLE 5-25. ALL AND ACTUAL EXCURSION BREAKDOWN FOR PLANT # 664 BY pH RANGE

	Period Covered, Minutes	Time		% of All Excursions		% of Total Time Period	
		All Excursions, Minutes	Actual Excursions, Minutes	All Excursions	Actual Excursions	All Excursions	Actual Excursions
Total	305,280	601	266	100	44.26	0.2	0.09
pH Excursion Range							
0-0.9		435	160	73.38	26.62	0.14	0.05
1-1.9		10		1.66		0.003	
2-2.9		8		1.33		0.003	
3-3.9		1		0.17		0.0003	
4-4.9		19	3	3.16	0.5	0.006	0.001
5-5.9		15	14	2.49	2.33	0.005	0.004
9-9.9		28	11	4.66	1.83	0.009	0.004
10-10.9		14	10	2.33	1.66	0.005	0.003
11-11.9							
12-12.9		11	10	1.83	1.66	0.004	0.003
13-14		60	58	9.98	9.65	0.02	0.02

TABLE 5-26. DISTRIBUTION OF ACTUAL pH EXCURSION TIME BY MONTH AND BY DURATION RANGE FOR PLANT # 664

Excursion Duration Range, Minutes	Total Monitoring Time, Minutes (A)	Time in Actual Excursion in Minutes During the Month of											
		Oct 1978 (B)	Nov 1978 (C)	Dec 1978 (D)	Jan 1979 (E)	Feb 1979 (F)	Mar 1979 (G)	Apr 1979 (H)	May 1979 (I)	Jun 1979 (J)	Jul 1979 (K)	Aug 1979 (L)	Sep 1979 (M)
	305,280												
0- 15					68	2			12			14	
16- 30					45								
31- 60					35								
61- 120					90								
121- 240													
241- 480													
481- 960													
961-1920													
1921-3840													
Total Time in Excursion					238	2			12			14	

TABLE 5-27. PERCENTAGE DISTRIBUTION OF ACTUAL pH EXCURSION BY MONTH AND BY DURATION RANGE FOR PLANT # 664

Excursion Duration Range, Minutes	Percent of Total Time in Actual Excursion *											
	Oct 1978 (B/A x 100)	Nov 1978 (C/A x 100)	Dec 1978 (D/A x 100)	Jan 1979 (E/A x 100)	Feb 1979 (F/A x 100)	Mar 1979 (G/A x 100)	Apr 1979 (H/A x 100)	May 1979 (I/A x 100)	Jun 1979 (J/A x 100)	Jul 1979 (K/A x 100)	Aug 1979 (L/A x 100)	Sep 1979 (M/A x 100)
0- 15				.022	.0006			.004			.004	
16- 30				.015								
31- 60				.012								
61- 120				.029								
121- 240												
241- 480												
481- 960												
961-1920												
1921-3840												
Percentage of Total Time in Actual Excursion for the Month of				.078	.0006			.004			.004	

* Refer to Table 5-26 for Actual Excursion Time values used as a basis for calculating the percentages.

TABLE 5-28. TIME AND NUMBER OF EXCURSIONS BREAKDOWN BY ACTUAL AND NON-ACTUAL REASONS FOR PLANT # 664

Excursion Reason	Total Time in Monitoring, Minutes (X)	Number of Excursions (Y)	Total Time of Excursions Minutes (Z)	Average Duration of Unit Excursion Minutes/Excur. (Z/Y)	Percent of Total Number of Excursions
	305,280				
A) Actual Excursions					
Treatment System Upset/Shutdown		7	23	3.3	26.9
Process Upset					
Spills or Leaks		18	241	13.4	69.2
Operator Error					
Storm Water Runoff					
Emergency Operation					
Other (Actual)					
Unknown		1	2	2	3.8
Total Actual Excursions (A)		26	266	10.2	100.0
B) Non-Actual Excursions					
Instrument Error		11	302	27.5	42.3
Instrument Calibration		14	28	2.0	53.85
Diversion/ Interruption					
Other (Non-Actual)		1	5	5.0	3.85
Total Non-Actual Excursions (B)		26	335	12.88	100.0
C) Total Actual Plus Non-Actual Excursions (A + B)		52	601	11.55	

TABLE 5-29. EXCURSION DURATION BREAKDOWN BY ALL AND ACTUAL EXCURSION REASONS FOR PLANT # 586

Excursion Reason	Total Time in Monitoring, Minutes X	Time in Excursion, Minutes Y	Percent of Total Excursion Time	Percent of Total Monitoring Time in Excursion (Y/X x 100)
	484,020			
A) Actual Excursions				
Treatment System Upset/Shutdown				
Process Upset				
Spills or Leaks				
Operator Error				
Storm Water Runoff				
Emergency Operation				
Other (Actual)				
Unknown		900	100.00	0.18
Total Actual Excursions (A)		900	100.00	0.18
B) Non-Actual Excursions				
Instrument Error		3993	75.21	0.82
Instrument Calibration		1316	24.79	0.27
Diversion/ Interruption				
Other (Non-Actual)				
Total Non-Actual Excursions (B)		5309	100.00	1.09
C) Total Actual Plus Non-Actual Excursions (A + B)		6209		1.27

TABLE 5-30. ALL AND ACTUAL EXCURSION BREAKDOWN FOR PLANT # 586 BY pH RANGE

	Period Covered, Minutes	Time		% of All Excursions		% of Total Time Period	
		All Excursions, Minutes	Actual Excursions, Minutes	All Excursions	Actual Excursions	All Excursions	Actual Excursions
Total	484,020	6209	900	100	14.5	1.28	0.18
pH Excursion Range							
0-0.9		5		.08		.001	
1-1.9							
2-2.9							
3-3.9		2		.03		.004	
4-4.9		1		.016		.0002	
5-5.9		6091	900	98.10	14.5	1.26	0.18
9-9.9		100		1.60		0.02	
10-10.9		10		0.16		0.002	
11-11.9							
12-12.9							
13-14							

TABLE 5-31. DISTRIBUTION OF ACTUAL pH EXCURSION TIME BY MONTH AND BY DURATION RANGE FOR PLANT # 586

Excursion Duration Range, Minutes	Total Monitoring Time, Minutes (A)	Time in Actual Excursion in Minutes During the Month of											
		Oct 1978 (B)	Nov 1978 (C)	Dec 1978 (D)	Jan 1979 (E)	Feb 1979 (F)	Mar 1979 (G)	Apr 1979 (H)	May 1979 (I)	Jun 1979 (J)	Jul 1979 (K)	Aug 1979 (L)	Sep 1979 (M)
	484,020												
0- 15													
16- 30													
31- 60													
61- 120													
121- 240							240						
241- 480													
481- 960							660						
961-1920													
1921-3840													
Total Time in Excursion							900						

TABLE 5-32. PERCENTAGE DISTRIBUTION OF ACTUAL pH EXCURSION BY MONTH AND BY DURATION RANGE FOR PLANT # 586

Excursion Duration Range, Minutes	Percent of Total Time in Actual Excursion *											
	Oct 1978 (B/A x 100)	Nov 1978 (C/A x 100)	Dec 1978 (D/A x 100)	Jan 1979 (E/A x 100)	Feb 1979 (F/A x 100)	Mar 1979 (G/A x 100)	Apr 1979 (H/A x 100)	May 1979 (I/A x 100)	Jun 1979 (J/A x 100)	Jul 1979 (K/A x 100)	Aug 1979 (L/A x 100)	Sep 1979 (M/A x 100)
0- 15												
16- 30												
31- 60												
61- 120												
121- 240						.05						
241- 480												
481- 960						.136						
961-1920												
1921-3840												
Percentage of Total Time in Actual Excursion for the Month of						.186						

* Refer to Table 5-31 for Actual Excursion Time values used as a basis for calculating the percentages.

TABLE 5-33. TIME AND NUMBER OF EXCURSIONS BREAKDOWN BY ACTUAL AND NON-ACTUAL REASONS FOR PLANT # 586

Excursion Reason	Total Time in Monitoring, Minutes (X)	Number of Excursions (Y)	Total Time of Excursions Minutes (Z)	Average Duration of Unit Excursion Minutes/Excur. (Z/Y)	Percent of Total Number of Excursions
	484,020				
A) Actual Excursions					
Treatment System Upset/Shutdown					
Process Upset					
Spills or Leaks					
Operator Error					
Storm Water Runoff					
Emergency Operation					
Other (Actual)					
Unknown		2	900	450	100
Total Actual Excursions (A)		2	900	450	100
B) Non-Actual Excursions					
Instrument Error		5	3993	798.6	50
Instrument Calibration		5	1316	263.2	50
Diversion/ Interruption					
Other (Non-Actual)					
Total Non-Actual Excursions (B)		10	5309	530.9	100
C) Total Actual Plus Non-Actual Excursions (A + B)		12	6209	517	

TABLE 5-34. EXCURSION DURATION BREAKDOWN BY ALL AND ACTUAL EXCURSION REASONS FOR PLANT # 782

Excursion Reason	Total Time in Monitoring, Minutes X	Time in Excursion, Minutes Y	Percent of Total Excursion Time	Percent of Total Monitoring Time in Excursion (Y/X x 100)
	535,680			
A) Actual Excursions				
Treatment System Upset/Shutdown		2355 (1)	69.49	0.44
Process Upset				
Spills or Leaks		540 (1) (3)	15.93	0.1
Operator Error				
Storm Water Runoff		1170 (1) (2) (3)	34.52	0.22
Emergency Operation		330 (2)	9.38	0.06
Other (Actual)		75	2.21	0.01
Unknown		39	1.15	0.007
Total Actual Excursions (A)		3389 (4)		0.63
B) Non-Actual Excursions				
Instrument Error		742	20.17	0.14
Instrument Calibration		122	3.32	0.02
Diversion/ Interruption				
Other (Non-Actual)		2815	76.51	0.52
Total Non-Actual Excursions (B)		3679	100.00	0.68
C) Total Actual Plus Non-Actual Excursions (A + B)		7068		1.31

(1) 375 minute duplication in Treatment System Upset, Leaks and Spills, and Storm Water Runoff Excursion Reasons.

(2) 205 minute duplication in Emergency Operations and Storm Water Runoff Excursion Reasons.

(3) 165 minute duplication in Spills and Leaks and Storm Water Runoff Excursion Reasons.

(4) Is the actual total excursion time after subtraction of duplication times.

TABLE 5-35. ALL AND ACTUAL EXCURSION BREAKDOWN FOR PLANT # 782 BY pH RANGE

	Period Covered, Minutes	Time		% of All Excursions		% of Total Time Period	
		All Excursions, Minutes	Actual Excursions, Minutes	All Excursions	Actual Excursions	All Excursions	Actual Excursions
Total	535,680	7068	3389	100	47.95	1.32	0.63
pH Excursion Range							
0-0.9		2890	990	40.89	14.00	0.54	0.18
1-1.9		150	150	2.12	2.12	0.03	0.03
2-2.9		377	370	5.33	5.23	0.07	0.07
3-3.9		249	242	3.52	3.42	0.05	0.05
4-4.9		245	170	3.47	2.40	0.05	0.03
5-5.9		680	635	9.62	8.98	0.13	0.12
9-9.9		825	470	11.67	6.65	0.15	0.09
10-10.9		1652	362	23.37	5.12	0.31	0.07
11-11.9							
12-12.9							
13-14							

TABLE 5-36. DISTRIBUTION OF ACTUAL pH EXCURSION TIME BY MONTH AND BY DURATION RANGE FOR PLANT # 782

Excursion Duration Range, Minutes	Total Monitoring Time, Minutes (A)	Time in Actual Excursion in Minutes During the Month of											
		Aug 1978 (B)	Sep 1978 (C)	Oct 1978 (D)	Nov 1978 (E)	Dec 1978 (F)	Jan 1979 (G)	Feb 1979 (H)	Mar 1979 (I)	Apr 1979 (J)	May 1979 (K)	Jun 1979 (L)	Jul 1979 (M)
	535,680												
0- 15		15	35			29	5	15	15		5		15
16- 30		25							75				
31- 60									40				
61- 120		95	75	90					505	145		170	
121- 240							130	150	165		125		205
241- 480									270				
481- 960									990				
961-1920													
1921-3840													
Total Time in Excursion		135	110	90		29	135	165	2060	145	130	170	220

TABLE 5-37. PERCENTAGE DISTRIBUTION OF ACTUAL pH EXCURSION BY MONTH AND BY DURATION RANGE FOR PLANT # 782

Excursion Duration Range, Minutes	Percent of Total Time in Actual Excursion *											
	Aug 1978 (B/A x 100)	Sep 1978 (C/A x 100)	Oct 1978 (D/A x 100)	Nov 1978 (E/A x 100)	Dec 1978 (F/A x 100)	Jan 1979 (G/A x 100)	Feb 1979 (H/A x 100)	Mar 1979 (I/A x 100)	Apr 1979 (J/A x 100)	May 1979 (K/A x 100)	Jun 1979 (L/A x 100)	Jul 1979 (M/A x 100)
0- 15	.003	.006			.005	.001	.003	.003		.001		.003
16- 30	.005							.014				
31- 60								.007				
61- 120	.018	.014	.017					.094	.027		.032	
121- 240						.024	.028	.031		.023		.038
241- 480								.05				
481- 960								.185				
961-1920												
1921-3840												
Percentage of Total Time in Actual Excursion for the Month of	.025	.01	.017		.005	.025	.031	.384	.027	.024	.032	.041

* Refer to Table 5-36 for Actual Excursion Time values used as a basis for calculating the percentages.

TABLE 5-38. TIME AND NUMBER OF EXCURSIONS BREAKDOWN BY ACTUAL AND NON-ACTUAL REASONS FOR PLANT # 782

Excursion Reason	Total Time in Monitoring, Minutes (X)	Number of Excursions (Y)	Total Time of Excursions Minutes (Z)	Average Duration of Unit Excursion Minutes/Excur. (Z/Y)	Percent of Total Number of Excursions
	535,680				
A) Actual Excursions					
Treatment System Upset/Shutdown		16 (1)	2355 (4)	147.2	42.0
Process Upset					
Spills or Leaks		7 (1) (3)	540 (4) (6)	77.1	18.4
Operator Error					
Storm Water Runoff		18 (1) (2) (3)	1170 (4) (5) (6)	65	47.4
Emergency Operation		2 (2)	330 (5)	165	5.3
Other (Actual)		1	75	75	2.6
Unknown		7	39	5.6	18.4
Total Actual Excursions (A)		38 (7)	3389 (8)	89.2	*
B) Non-Actual Excursions					
Instrument Error		5	742	148.4	29.41
Instrument Calibration		5	122	24.4	29.41
Diversion/ Interruption					
Other (Non-Actual)		7	2815	402	41.18
Total Non-Actual Excursions (B)		17	3679	216.41	100.0
C) Total Actual Plus Non-Actual Excursions (A + B)		55	7068	128.5	

TABLE 5-38 - continued

(1) Duplication of 5 excursions in excursion reasons Treatment System Upset, Spills and Leaks, and Storm Water Runoff.

(2) Duplication of 1 excursion in excursion reasons Emergency Operation and Storm Water Runoff.

(3) Duplication of 2 excursions in excursion reasons Storm Water Runoff and Spills and Leaks.

(4) 375 minutes duplication in excursion reasons Treatment System Upset, Spills and Leaks, and Storm Water Runoff.

(5) 205 minutes duplication in excursion reasons Emergency Operation and Storm Water Runoff.

(6) 165 minutes duplication in excursion reasons Storm Water Runoff and Spills and Leaks.

(7) Is the total number of actual excursions after subtraction of duplicate excursions.

(8) Is the total actual excursion time after subtraction of duplicate excursion times.

* Is greater than 100 because of duplication of some of the excursions.

TABLE 5-39. EXCURSION DURATION BREAKDOWN BY ALL AND ACTUAL EXCURSION REASONS FOR PLANT # 786

Excursion Reason	Total Time in Monitoring, Minutes X	Time in Excursion, Minutes Y	Percent of Total Excursion Time	Percent of Total Monitoring Time in Excursion (Y/X x 100)
	437,760			
A) Actual Excursions				
Treatment System Upset/Shutdown		295	78.25	0.07
Process Upset				
Spills or Leaks				
Operator Error				
Storm Water Runoff				
Emergency Operation		75	19.89	0.02
Other (Actual)		7	1.86	0.001
Unknown				
Total Actual Excursions (A)		377	100.00	0.091
B) Non-Actual Excursions				
Instrument Error		525	8.27	0.12
Instrument Calibration		34	0.54	0.007
Diversion/ Interruption		5785	91.19	1.32
Other (Non-Actual)				
Total Non-Actual Excursions (B)		6344	100.00	1.447
C) Total Actual Plus Non-Actual Excursions (A + B)		6721		1.54

TABLE 5-40. ALL AND ACTUAL EXCURSION BREAKDOWN FOR PLANT # 786 BY pH RANGE

	Period Covered, Minutes	Time		% of All Excursions		% of Total Time Period	
		All Excursions, Minutes	Actual Excursions, Minutes	All Excursions	Actual Excursions	All Excursions	Actual Excursions
Total	437,760	6721	377	100	5.61	1.54	0.09
pH Excursion Range							
0-0.9							
1-1.9							
2-2.9							
3-3.9		5		0.07		0.001	
4-4.9		480		7.14		0.11	
5-5.9		4237	355	63.04	5.28	0.97	0.08
9-9.9		1987	22	29.56	0.33	0.45	0.005
10-10.9		7		0.1		0.001	
11-11.9		5		0.07		0.001	
12-12.9							
13-14							

TABLE 5-41. DISTRIBUTION OF ACTUAL pH EXCURSION TIME BY MONTH AND BY DURATION RANGE FOR PLANT # 786

Excursion Duration Range, Minutes	Total Monitoring Time, Minutes (A)	Time in Actual Excursion in Minutes During the Month of											
		Oct 1978 (B)	Nov 1978 (C)	Dec 1978 (D)	Jan 1979 (E)	Feb 1979 (F)	Mar 1979 (G)	Apr 1979 (H)	May 1979 (I)	Jun 1979 (J)	Jul 1979 (K)	Aug 1979 (L)	Sep 1979 (M)
	437,760												
0- 15			7		10	15							
16- 30													
31- 60			60										
61- 120				75									
121- 240			210										
241- 480													
481- 960													
961-1920													
1921-3840													
Total Time in Excursion			277	75	10	15							

TABLE 5-42. PERCENTAGE DISTRIBUTION OF ACTUAL pH EXCURSION BY MONTH AND BY DURATION RANGE FOR PLANT # 786

Excursion Duration Range, Minutes	Percent of Total Time in Actual Excursion *											
	Oct 1978 (B/A x 100)	Nov 1978 (C/A x 100)	Dec 1978 (D/A x 100)	Jan 1979 (E/A x 100)	Feb 1979 (F/A x 100)	Mar 1979 (G/A x 100)	Apr 1979 (H/A x 100)	May 1979 (I/A x 100)	Jun 1979 (J/A x 100)	Jul 1979 (K/A x 100)	Aug 1979 (L/A x 100)	Sep 1979 (M/A x 100)
0- 15		.002		.002	.003							
16- 30												
31- 60		.013										
61- 120			.017									
121- 240		.048										
241- 480												
481- 960												
961-1920												
1921-3840												
Percentage of Total Time in Actual Excursion for the Month of		.063	.017	.002	.003							

* Refer to Table 5-41 for Actual Excursion Time values used as a basis for calculating the percentages.

TABLE 5-43. TIME AND NUMBER OF EXCURSIONS BREAKDOWN BY ACTUAL AND NON-ACTUAL REASONS FOR PLANT # 786

Excursion Reason	Total Time in Monitoring, Minutes (X)	Number of Excursions (Y)	Total Time of Excursions Minutes (Z)	Average Duration of Unit Excursion Minutes/Excur. (Z/Y)	Percent of Total Number of Excursions
	437,760				
A) Actual Excursions					
Treatment System Upset/Shutdown		4	295	73.8	57.1
Process Upset					
Spills or Leaks					
Operator Error					
Storm Water Runoff					
Emergency Operation		1	75	75.0	14.3
Other (Actual)		2	7	3.5	28.6
Unknown					
Total Actual Excursions (A)		7	377	53.9	100.0
B) Non-Actual Excursions					
Instrument Error		5	525	105.0	26.32
Instrument Calibration		7	34	4.9	36.84
Diversion/ Interruption		7	5785	826.4	36.84
Other (Non-Actual)					
Total Non-Actual Excursions (B)		19	6344	333.89	100.0
C) Total Actual Plus Non-Actual Excursions (A + B)		26	6721	258.5	

TABLE 5-44. EXCURSION DURATION BREAKDOWN BY ALL AND ACTUAL EXCURSION REASONS FOR PLANT # 928

Excursion Reason	Total Time in Monitoring, Minutes X	Time in Excursion, Minutes Y	Percent of Total Excursion Time	Percent of Total Monitoring Time in Excursion (Y/X x 100)
	337,560			
A) Actual Excursions				
Treatment System Upset/Shutdown		15	100.00	0.004
Process Upset				
Spills or Leaks				
Operator Error				
Storm Water Runoff				
Emergency Operation				
Other (Actual)				
Unknown				
Total Actual Excursions (A)		15	100.00	0.004
B) Non-Actual Excursions				
Instrument Error		1214	20.46	0.36
Instrument Calibration		3280 (1)	55.28	0.97
Diversion/ Interruption		2351 (1)	39.63	0.70
Other (Non-Actual)		4	0.06	0.002
Total Non-Actual Excursions (B)		5933 (2)		1.76
C) Total Actual Plus Non-Actual Excursions (A + B)		5948		1.764

(1) 916 minute duplication in Non-Actual Excursion Reasons, Instrument Calibration and Diversion/Interruption.

(2) Is the total non-actual excursion time after subtraction of duplication time.

TABLE 5-45. ALL AND ACTUAL EXCURSION BREAKDOWN
FOR PLANT # 928 BY pH RANGE

	Period Covered, Minutes	Time		% of All Excursions		% of Total Time Period	
		All Excursions, Minutes	Actual Excursions, Minutes	All Excursions	Actual Excursions	All Excursions	Actual Excursions
Total	337,560	5948	15	100	0.25	1.76	0.004
pH Excursion Range							
0-0.9		759		12.76		0.22	
1-1.9		245		4.12		0.07	
2-2.9		10		0.17			0.003
3-3.9		1309		22.00		0.39	
4-4.9		86	5	1.44	0.08	0.03	0.001
5-5.9		2813	10	47.29	0.17	0.83	0.003
9-9.9		26		0.44		0.007	
10-10.9		22		0.37		0.006	
11-11.9		17		0.28		0.005	
12-12.9		30		0.50		0.009	
13-14		631		10.61		0.19	

TABLE 5-46. DISTRIBUTION OF ACTUAL pH EXCURSION TIME BY MONTH AND BY DURATION RANGE FOR PLANT # 928

Excursion Duration Range, Minutes	Total Monitoring Time, Minutes (A)	Time in Actual Excursion in Minutes During the Month of											
		Oct 1978 (B)	Nov 1978 (C)	Dec 1978 (D)	Jan 1979 (E)	Feb 1979 (F)	Mar 1979 (G)	Apr 1979 (H)	May 1979 (I)	Jun 1979 (J)	Jul 1979 (K)	Aug 1979 (L)	Sep 1979 (M)
	337,560												
0- 15											15		
16- 30													
31- 60													
61- 120													
121- 240													
241- 480													
481- 960													
961-1920													
1921-3840													
Total Time in Excursion											15		

TABLE 5-47. PERCENTAGE DISTRIBUTION OF ACTUAL pH EXCURSION BY MONTH AND BY DURATION RANGE FOR PLANT # 928

Excursion Duration Range, Minutes	Percent of Total Time in Actual Excursion *											
	Oct 1978 (B/A x 100)	Nov 1978 (C/A x 100)	Dec 1978 (D/A x 100)	Jan 1979 (E/A x 100)	Feb 1979 (F/A x 100)	Mar 1979 (G/A x 100)	Apr 1979 (H/A x 100)	May 1979 (I/A x 100)	Jun 1979 (J/A x 100)	Jul 1979 (K/A x 100)	Aug 1979 (L/A x 100)	Sep 1979 (M/A x 100)
0- 15											.004	
16- 30												
31- 60												
61- 120												
121- 240												
241- 480												
481- 960												
961-1920												
1921-3840												
Percentage of Total Time in Actual Excursion for the Month of											.004	

* Refer to Table 5-46 for Actual Excursion Time values used as a basis for calculating the percentages.

TABLE 5-48. TIME AND NUMBER OF EXCURSIONS BREAKDOWN BY ACTUAL AND NON-ACTUAL REASONS FOR PLANT # 928

Excursion Reason	Total Time in Monitoring, Minutes (X)	Number of Excursions (Y)	Total Time of Excursions Minutes (Z)	Average Duration of Unit Excursion Minutes/Excur. (Z/Y)	Percent of Total Number of Excursions
	337,560				
A) Actual Excursions					
Treatment System Upset/Shutdown		2	15	7.5	100.0
Process Upset					
Spills or Leaks					
Operator Error					
Storm Water Runoff					
Emergency Operation					
Other (Actual)					
Unknown					
Total Actual Excursions (A)		2	15	7.5	100.0
B) Non-Actual Excursions					
Instrument Error		21	1214	57.8	11.17
Instrument Calibration		150 (1)	3280 (2)	21.9	79.78
Diversion/ Interruption		21 (1)	2351 (2)	112	11.17
Other (Non-Actual)		2	4	2	1.06
Total Non-Actual Excursions (B)		186 (3)	5933 (4)	31.9	
C) Total Actual Plus Non-Actual Excursions (A + B)		188	5948	31.64	

TABLE 5-48 - continued

(1) Duplication of excursions in excursion reasons Instrument Error and Flow Diversion or Interruption.

(2) 916 minutes duplication in Non-Actual excursion reasons Instrument Error and Flow Diversion or Interruption.

(3) Is the total number of Non-Actual excursions after subtraction of duplicate excursions.

(4) Is the total Non-Actual excursion time after subtraction of duplication time.

SECTION 6.0

pH CONTROL COST DATA

6.1 GENERAL

During the visit for collection of pH excursion data, the plant personnel were requested to fill out a questionnaire containing flow, cost, and other information pertaining to the pH control system. The cost information included the capital and annual operation and maintenance cost data. The capital cost figures given by the plants were updated 1979 cost figures except for one plant, and the capital cost for that plant has been escalated to the March 1979 value by using a cost index (7). The capital costs were annualized using the following formula:

$$CA = B[r(1 + r)^n]/[(1 + r)^n - 1]$$

Where:

CA = Annual cost
B = Amount invested (excluding cost of land)
r = Annual interest rate
n = Useful life in years

For computing the annualized capital cost, a 10 percent interest rate, 10 years life for the equipment and zero salvage value at the end of 10 years were assumed.

Table 6-1 gives the total annual cost of the pH control system and the waste water flow values for the plants visited. No direct mathematical relationship could be found between the cost, flow, and other variables because of the intermixing of other product waste water, raw influent pH, and joint treatment.

In many cases, the raw waste water was intermixed with waste water from other processes (including organics) and the cost figures were for the commingled waste water. Plants #498 and #928 were the only plants where the waste water originated from the manufacture of a single inorganic product. The amount of neutralization chemicals used is dependent on the influent pH of the single or combined waste water, and is reflected in the annual operation and maintenance cost. In the case of acid subcategories, leaks and spills constitute a major source of waste water. The pH of the waste water in the case of leaks depends on the extent and duration of the leaks. For combined waste water pH control, the pH of the two or more combined waste

water streams were different and treatment costs could not be related to a single pH factor. In some cases, along with pH, other pollutants were also treated. For example, in the hydrofluoric acid and aluminum fluoride subcategories, the neutralization system has been installed to remove fluoride from the waste water. The pH and fluoride are thus jointly treated in that system, and the cost cannot be broken down or separated for pH control. The type of neutralizing chemicals used, the number of stages used for neutralization, and the sophistication of the control system also have bearing on the total annual cost. There was no evidence from the cost/flow data given in Table 6-1 of a direct relationship between pH control cost and flow. Furthermore, no relationship was found between pH peak and cost.

6.2 PLANT DATA

The cost figures for the pH control systems for the 8 plants visited are given in Tables 6-2 through 6-9. The tables include the waste water flow, capital cost, annual operation and maintenance cost, and the total annual cost of the pH control systems.

The cost figures given in Table 6-2 for Plant #102 are for pH control of titanium dioxide subcategory waste water. After neutralization, the waste water is combined with other product waste water and discharged through a single outfall. The pH compliance and pH control cost for this plant are not directly related because of intermixing of other waste water.

The flow figure given for Plant #150 is comprised of the waste water from chlorine-caustic and hydrochloric acid subcategories. Hydrochloric acid subcategory waste water constitutes a small percent of the total flow, and the costs are more representative of the chlorine-caustic subcategory.

The waste water flow given in Table 6-4 for Plant #491 is for sulfuric acid subcategory only, and the costs given in the same table are representative of the subcategory.

At Plant #586, other products are manufactured and the pH control cost given in the table are for the sodium metabisulfite and sulfur dioxide subcategories. The waste water from different products, after treatment, is combined and discharged through a single outfall. In spite of commingling, the plant has few actual excursions. The treatment system has lagoons for smoothing out the pH excursions and also for removing suspended solids of the combined waste water; the cost figures do not include the cost of lagoon installation.

The pH control costs given for Plant #664 in Table 6-6 are for the non-contact cooling waters of hydrofluoric acid and sulfuric acid subcategories. The process waste water from the hydrofluoric acid facility is treated separately and this pH control cost is not included in the table; therefore, the cost

figures are more representative of the sulfuric acid subcategory.

Plant #782 has a biological treatment system. The pH control costs are for the combined waste water from hydrogen cyanide and other inorganic and organic products. The costs are less in spite of the large flow because of the intermixing of alkaline and acidic waste water generated from different products manufactured at the plant site. The costs include the additional neutralization chemicals used and installation and operation of the pH monitors. These costs are more representative of plants making multiple products.

The flow and pH control figures given in Table 6-8 for Plant #786 are for a single subcategory, sodium silicate. The cost figures are representative of the subcategory.

The flow and pH control cost figures given in Table 6-9 for Plant #928 are for the hydrofluoric acid and aluminum fluoride subcategories. The influent flow to the treatment system is less because the plant recycles a major portion of waste water from the two subcategories. The neutralization system is a joint treatment system for both pH and fluoride removal and control. Based on the excursion data, the plant has the most efficient pH control system of all the plants visited.

TABLE 6-1. SUMMARY OF TOTAL ANNUAL COST OF pH CONTROL SYSTEM AND WASTE WATER FLOW OF PLANTS STUDIED FOR pH ASSESSMENT

Plant #	Waste Water Flow, m^3/day	Total Annual Cost of pH Control, dollars/yr
102	4,201	557,700
150	35,734	223,600
491	16,667	193,830
586	4,080	170,030
664	25,075	50,340
782	7,522	73,900
786	129	10,740
928	600	870,320

TABLE 6-2. pH TREATMENT AND CONTROL COSTS FOR PLANT #102

Subcategory: TITANIUM DIOXIDE (Chloride Process)

Waste water flow: 4201 cubic meters per day

A. INVESTMENT COST	
Equipment and Installation Cost.....	$345,000
Engineering Cost.....	6,050
Other.....	3,600
TOTAL INVESTMENT COST	$354,650
B. ANNUAL OPERATION AND MAINTENANCE COST	
Labor Cost.....	$ 80,000
Maintenance Cost.....	20,000
Chemical Cost.....	400,000
Other (Taxes, insurance, monitoring, analysis and reporting, etc.).....	---
TOTAL ANNUAL OPERATION AND MAINTENANCE COST	$500,000
C. AMORTIZATION OF INVESTMENT COST	$ 57,700
TOTAL ANNUAL COST	$557,700

TABLE 6-3. pH TREATMENT AND CONTROL COSTS FOR PLANT #150

Subcategories: HYDROCHLORIC AND CHLORINE-CAUSTIC

Waste water flow: 35,734 cubic meters per day

A. INVESTMENT COST	
Equipment Cost.....	$ 48,000
Installation Cost.....	64,000
Engineering Cost.....	33,000
Other.....	---
TOTAL INVESTMENT COST	$145,000
B. ANNUAL OPERATION AND MAINTENANCE COST	
Labor Cost.....	$ 50,000
Maintenance Cost.....	20,500
Chemical Cost.....	82,000
Other (Taxes, insurance, monitoring, analysis and reporting, etc.).....	47,500
TOTAL ANNUAL OPERATION AND MAINTENANCE COST	$200,000
C. AMORTIZATION OF INVESTMENT COST	$ 23,600
TOTAL ANNUAL COST	$223,600

TABLE 6-4. pH TREATMENT AND CONTROL COSTS FOR PLANT #491

Subcategory: SULFURIC ACID

Waste water flow: 16,667 cubic meters per day

A. INVESTMENT COST	
Equipment Cost.....	$250,000
Installation Cost.....	100,000
Engineering Cost.....	30,000
Other.....	---
TOTAL INVESTMENT COST	$380,000
B. ANNUAL OPERATION AND MAINTENANCE COST	
Labor Cost.....	$ 20,000
Maintenance Cost.....	30,000
Chemical Cost.....	72,000
Other (Taxes, insurance, monitoring, analysis and reporting, etc.).....	10,000
TOTAL ANNUAL OPERATION AND MAINTENANCE COST	$132,000
C. AMORTIZATION OF INVESTMENT COST	$ 61,830
TOTAL ANNUAL COST	$193,830

TABLE 6-5. pH TREATMENT AND CONTROL COSTS FOR PLANT #586

Subcategory: SODIUM METABISULFITE + SULFUR DIOXIDE

Waste water flow: 4080 cubic meters per day

A. INVESTMENT COST	
Equipment Cost.....	$ 72,800
Installation Cost.....	118,100
Engineering Cost.....	---
Other.....	---
TOTAL INVESTMENT COST	$190,900
B. ANNUAL OPERATION AND MAINTENANCE COST	
Labor Cost.....	$ 15,340
Maintenance Cost.....	10,760
Chemical Cost.....	69,200
Other (Taxes, insurance, monitoring, analysis and reporting, etc.).....	43,670
TOTAL ANNUAL OPERATION AND MAINTENANCE COST	$138,970
C. AMORTIZATION OF INVESTMENT COST	$ 31,060
TOTAL ANNUAL COST	$170,030

TABLE 6-6. pH TREATMENT AND CONTROL COSTS FOR PLANT #664

Subcategory*: HYDROFLUORIC ACID + SULFURIC ACID

Waste water flow: 25,075 cubic meters per day

A. INVESTMENT COST	
Equipment Cost.....	---
Installation Cost.....	---
Engineering Cost.....	---
Other.....	---
TOTAL INVESTMENT COST	$125,000
B. ANNUAL OPERATION AND MAINTENANCE COST	
Labor Cost.....	---
Maintenance Cost.....	---
Chemical Cost.....	---
Other (Taxes, insurance, monitoring, analysis and reporting, etc.).....	---
TOTAL ANNUAL OPERATION AND MAINTENANCE COST	$ 30,000
C. AMORTIZATION OF INVESTMENT COST	$ 20,340
TOTAL ANNUAL COST	$ 50,340

* pH control costs are included only for non-contact cooling waters of both the subcategories.

TABLE 6-7. pH TREATMENT AND CONTROL COSTS FOR PLANT #782*

Subcategory: HYDROGEN CYANIDE

Waste water flow: 7522** cubic meters per day

A. INVESTMENT COST	
Equipment Cost.....	---
Installation Cost.....	---
Engineering Cost.....	---
Other.....	---
TOTAL INVESTMENT COST	$ 32,248
B. ANNUAL OPERATION AND MAINTENANCE COST	
Labor Cost.....	---
Maintenance Cost.....	---
Chemical Cost.....	---
Other (Taxes, insurance, monitoring, analysis and reporting, etc.).....	---
TOTAL ANNUAL OPERATION AND MAINTENANCE COST	$ 68,000
C. AMORTIZATION OF INVESTMENT COST	$ 5,900
TOTAL ANNUAL COST	$ 73,900

* The costs are for pH control of hydrogen cyanide and four other organic product waste waters.

** The total effluent figure is for hydrogen cyanide and four other organic products.

TABLE 6-8. pH TREATMENT AND CONTROL COSTS FOR PLANT #786

Subcategory: SODIUM SILICATE

Waste water flow: 129 cubic meters per day

A.	INVESTMENT COST	
	Equipment Cost.....	---
	Installation Cost.....	---
	Engineering Cost.....	---
	Other.....	---
	TOTAL INVESTMENT COST	$ 15,000
B.	ANNUAL OPERATION AND MAINTENANCE COST	
	Labor Cost.....	$ 4,000
	Maintenance Cost.....	3,600
	Chemical Cost.....	700
	Other (Taxes, insurance, monitoring, analysis and reporting, etc.).....	---
	TOTAL ANNUAL OPERATION AND MAINTENANCE COST	$ 8,300
C.	AMORTIZATION OF INVESTMENT COST	$ 2,440
	TOTAL ANNUAL COST	$ 10,740

TABLE 6-9. pH TREATMENT AND CONTROL COSTS FOR PLANT #928

Subcategory: HYDROFLUORIC ACID + ALUMINUM FLUORIDE

Waste water flow: 600 cubic meters per day

A. INVESTMENT COST	
Euipment Cost.....	---
Installation Cost.....	---
Engineering Cost.....	---
Other.....	---
TOTAL INVESTMENT COST	$1,600,000
B. ANNUAL OPERATION AND MAINTENANCE COST	
Labor Cost.....	$ 52,000
Maintenance Cost.....	180,000
Chemical Cost.....	273,000
Other (Taxes, insurance, monitoring, analysis and reporting, etc.).....	82,000
TOTAL ANNUAL OPERATION AND MAINTENANCE COST	$610,000
C. AMORTIZATION OF INVESTMENT COST	$260,320
TOTAL ANNUAL COST	$870,320

REFERENCES

1. JRB Associates, Inc. An Assessment of pH Control of Process Waters in Selected Plants. Draft Report submited to the Office of Water Programs, U.S. Environmental Protection Agency. March, 1979.

2. Ross, R.D. Industrial Waste Disposal. Van Nostrand Reinhold Book Corporation, New York. 1968.

3. Davidson, Lawrence N. "Neutralization" contained in Unit Operations for Treatment of Hazardous Industrial Wastes. Pollution Technology Review No. 49, Noyes Data Corporation. 1979.

4. Hoffman, F. How to Select a pH Control System for Neutralizing Waste Acids. Chemical Engineering. October 30, 1972.

5. Vogel, Arthur I. A Textbook of Quantitative Inorganic Analysis Including Elementary Instrument Analysis. Third Edition. John Wiley and Sons Inc., New York. 1961.

6. Hoyle, D.L. Designing for pH Control. Chemical Engineering, November 8, 1976.

7. Chemical Engineering, August 27, 1979.

APPENDIX A

TRIP REPORTS AND RAW EXCURSION DATA

A.1 INTRODUCTION

The detailed description of the pH control facilities including the waste water treatment system of the plants visited for assessment of pH control of process waters of the Inorganic Chemicals subcategories are given in Section A.2 of this Appendix. The pH excursion data collected during the plant visits from the continuous pH monitoring charts, logbooks, and information provided by plant personnel is given in Section A.3 of this Appendix. The collected raw excursion data was used to evaluate the pH compliance for each plant and for the Inorganic Chemicals Industry in general.

A.2 PLANT TRIP REPORTS

PLANT #102 TRIP REPORT

Plant #102 was visited for observance of the waste water treatment system and review of the pH continuous monitoring charts for the Titanium Dioxide (Ilmenite - Chloride Process) Subcategory.

Plant #102 uses Ilmenite ore or upgraded titanium ore (titania slag) for the manufacture of titanium dioxide by the chloride process. The plant also makes one organic and two other inorganic products.

The plant has two discharge outfalls, 101 and 201. The non-contact cooling water from the four products manufactured are combined and sent to a cooling water pond before discharge through outfall 101. The capacity of the pond is 25 million gallons and has a retention time of 2 days.

The process waste water from the pigment plant, consisting of acid scrubber and chlorinated sumps, and other process effluents, is neutralized with lime in a reactor. In the first reactor, enough lime is added using feed forward control to raise the pH of the raw waste water from 1 to 4.8-5.2. The effluent from the first reactor is combined with the boiler blowdown, cooling tower blowdown, deionization waste and storm water, and fed to a second reactor where it is reacted with additional lime using feedback control to raise the pH to 8. The reacted waste water is then sent to the new tailings pond. The capacity of the tailings pond is 60 million gallons and the residence time of water in the pond is 30 days. Waste waters from the other two inorganic products are also sent to the new tailings pond. Waste water from the organic product is aerated in a lagoon and the effluent is sent to the new tailings pond. The effluent from the new tailings pond is monitored for flow and pH. When the pH exceeds the 6-9 range, it is corrected manually with 50 percent caustic soda prior to discharge.

The new tailings pond was built and began filling in mid-April 1979. Prior to building the new pond, the old pond was used for settling prior to final discharge. The plant personnel suspected that water might be leaking from the old pond and seeping into ground water because of the pervious nature of the pond bottom. The discharge of the overflow from the old pond was stopped on May 2, 1979. The overflow from the organic product waste water lagoon was stopped from flowing into the old pond on July 9, 1979 and was sent instead to the newly built pond. Water from the old pigment pond was pumped to the new pigment pond starting June 1, 1979. The pH of the waste water when pumping began was in the range of 5.3 to 5.6. The pH in the effluent from the new pond at that time was in the range of 7.2 to 8.5. The pH in the effluent from the new pond started going down

because of increased biodegradation of organic product waste water in the new pond. The biodegradation of the organic product waste water resulted from the increased residence time in the settling ponds and greater dilution. Attempts were then made to manually adjust the pH at the outfall, whenever a low pH excursion was observed. This was accomplished by adding 50% sodium hydroxide. The manual adjustment continued until July 16, 1979. Exact pH control was not possible because of the manual addition and also because of increased flow. The manual addition was stopped a few days after the old pond had been completely drained out. The new pond, at present, is operating smoothly and the plant personnel do not foresee any problems in the future. Also, the scrubber waste water from one of the inorganic products is sent to a second neutralization tank (of the pigment treatment system) when high pH is observed because of leaks. Prior to rerouting it was sent directly to the pigment pond without any treatment. The simplified block diagrams of the treatment system and lagoons are given in Figures A-1 and A-2.

PLANT #150 TRIP REPORT

Plant #150 was chosen to represent the Hydrochloric Acid Subcategory for the Inorganic Chemicals pH study and visited for that purpose. Upon subsequent return, discussion led to the conclusion that the nature of the data, and the plant design warranted its inclusion in the Chlor-Alkali subcategory. A small fraction (10,000 lbs/day) of the total HCl produced is used to neutralize wastes from the Chlor-Alkali processes. The HCl is produced via a simple two-stage process of combustion and absorbtion. First, H_2 and Cl_2 gas are burned to form HCl gas, and this gas is then absorbed into water.

The only wastes from this process are non-contact cooling water and trap acid. The cooling water is discharged to a marine waterway after mixing with treated chlor-alkali wastes, and the trap acid is used to condition brine for the chlorine process. The cooling water flow from the HCl plant is approximately 43 gpm and flows via two separate routes to a final mixing box where all discharged wastes are joined just prior to outfall. The major route presently flows past the plant's salt pads, thus picking up some additional water at times. During the period covered by the data, this flow went directly to the final mixing box. A secondary route first flows into the chlor-alkali area of the plant where it joins part of the chlorine and sodium chlorate cooling wastes prior to flowing to the mixing box.

At the mixing box, should the final pH be out of specification, a secondary adjustment corrects the pH. This system is operated via a linear-analog controller using feedback control which can add either caustic or acid, as necessary. This system was installed in 1977.

Waste water from the chlor-alkali process consists of non-contact cooling for chlorine and caustic cooling wastes (all other wastes are sent to ponds for evaporation and are not discharged).

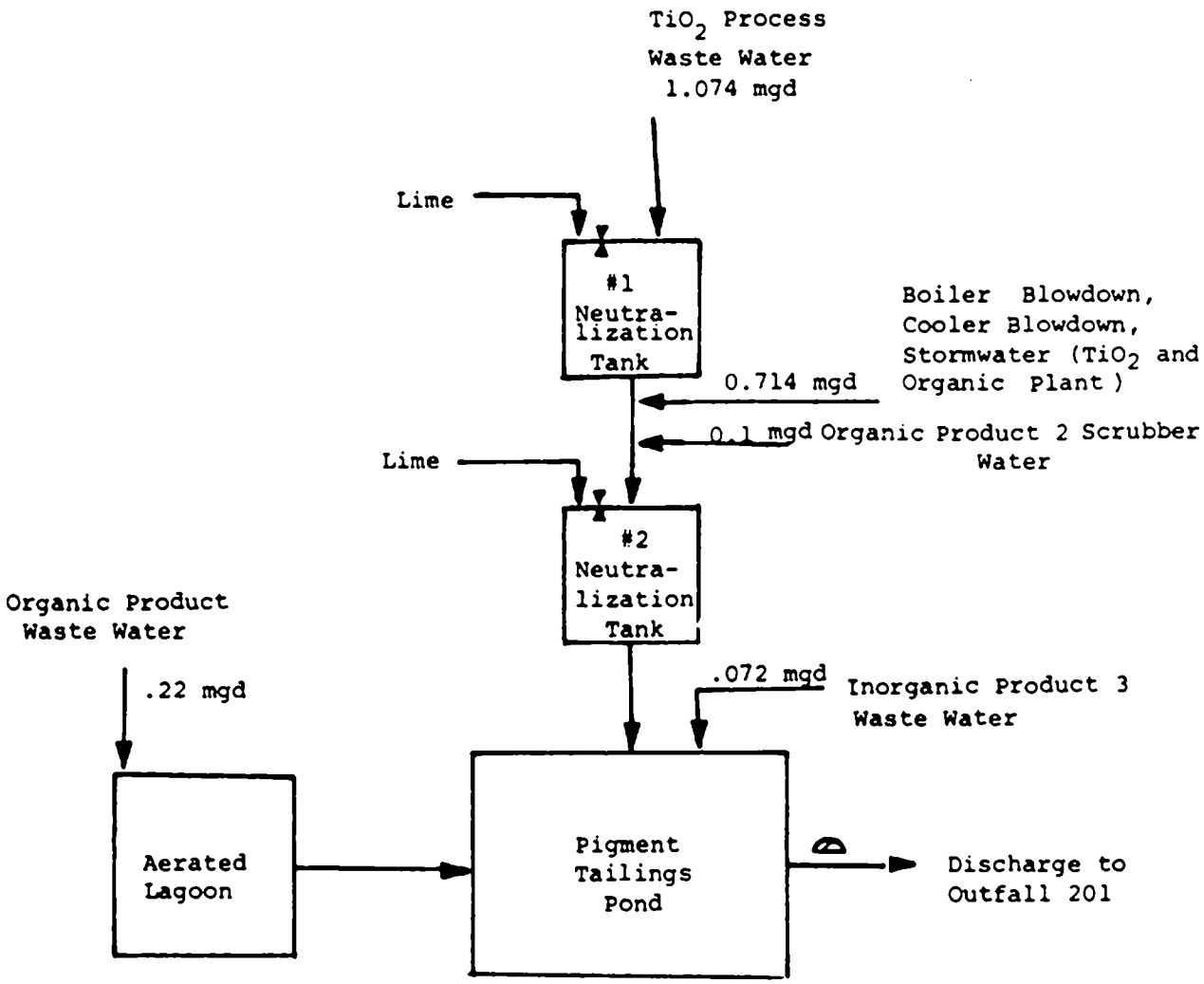

Non Contact Cooling Water

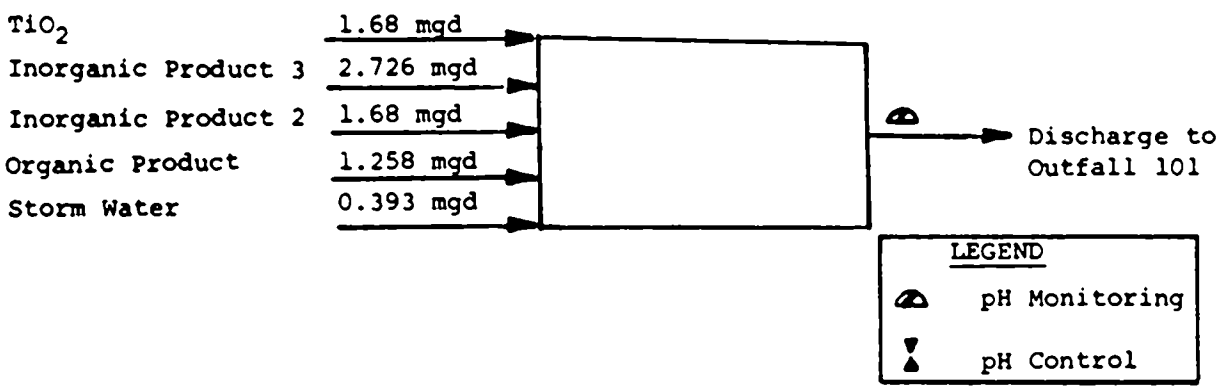

Figure A-1. Simplified Flow Diagram of the Waste Water Treatment System of Plant #102.

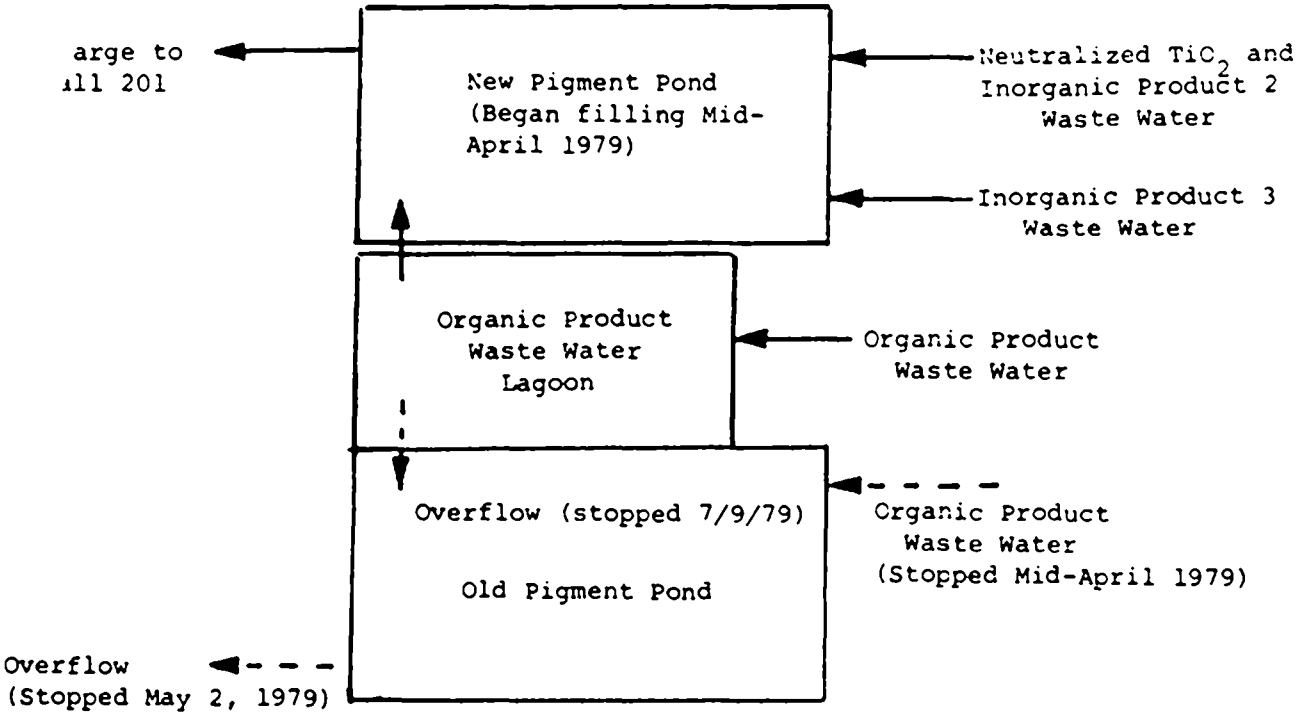

Figure A-2. Waste Treatment Lagoon System for Plant #102.

The caustic evaporator wastes are treated via a series of primary and backup hotwells which add hydrochloric acid as necessary to neutralize the waste water. Should these additions fail to properly neutralize, the water in this sewer can be diverted to a retention tank (retention time .75 hour). Flow from the hotwells (or retention tank if necessary) goes to the final plant mixing box and can, along with the non-contact cooling water from chlorine and HCl, be neutralized by the secondary trim system capable of adjusting with either caustic or acid. The non-contact chlorine waste, like that for HCl undergoes no neutralization other than the mixing effect with treated caustic cooling and the secondary trim system. Figure A-3 is a simplified flow diagram of the pH control system.

This plant had the largest number of excursions in the shortest amount of time; however, considering total time in actual excursions, this plant has a good compliance record. The majority of the excursions noted were due to process or treatment upsets in the chlor-alkali area of the plant. On this basis and the basis of total production and waste water volume, it was decided to use the data obtained to represent the chlor-alkali subcategory. The large number of excursions can in part be explained by major process relocation and additions at the plant.

This particularly affects the plant as the waste water is not treated in a distinct system, but is adjusted primarily at "on-site" locations and any major construction disturbs these systems.

PLANT #491 TRIP REPORT

Plant #491 was visited for the review of pH control systems and continuous monitoring charts for the Sulfuric Acid Subcategory. Two schemes are used for the production of sulfuric acid. In the first system, dried, molten sulfur is burned in air producing sulfur dioxide. Sulfur dioxide is oxidized to trioxide in the presence of vanadium catalyst. Sulfur trioxide is then absorbed in weak sulfuric acid to produce the required grade sulfuric acid. The vent gases are scrubbed with water, and the scrubber water is sent to the absorber. The second process of making sulfuric acid consists of decomposing sludge acid from an oil refinery. The sulfur dioxide formed from decomposition is purified before being converted to trioxide and then to sulfuric acid. The purification step which includes cooling and filtration of gas, produces a weak acid stream (known as purge acid stream) which is discharged to the treatment system.

In the two process schemes, for non-contact cooling, two types of heat exchangers are used; cascade and shell and tube. The cooling water from the cascade heat exchangers is collected in a trough and a pH monitor placed in the trough gives an indication of the water condition. When the pH in the trough goes down because of a leak in the unit, soda ash is added

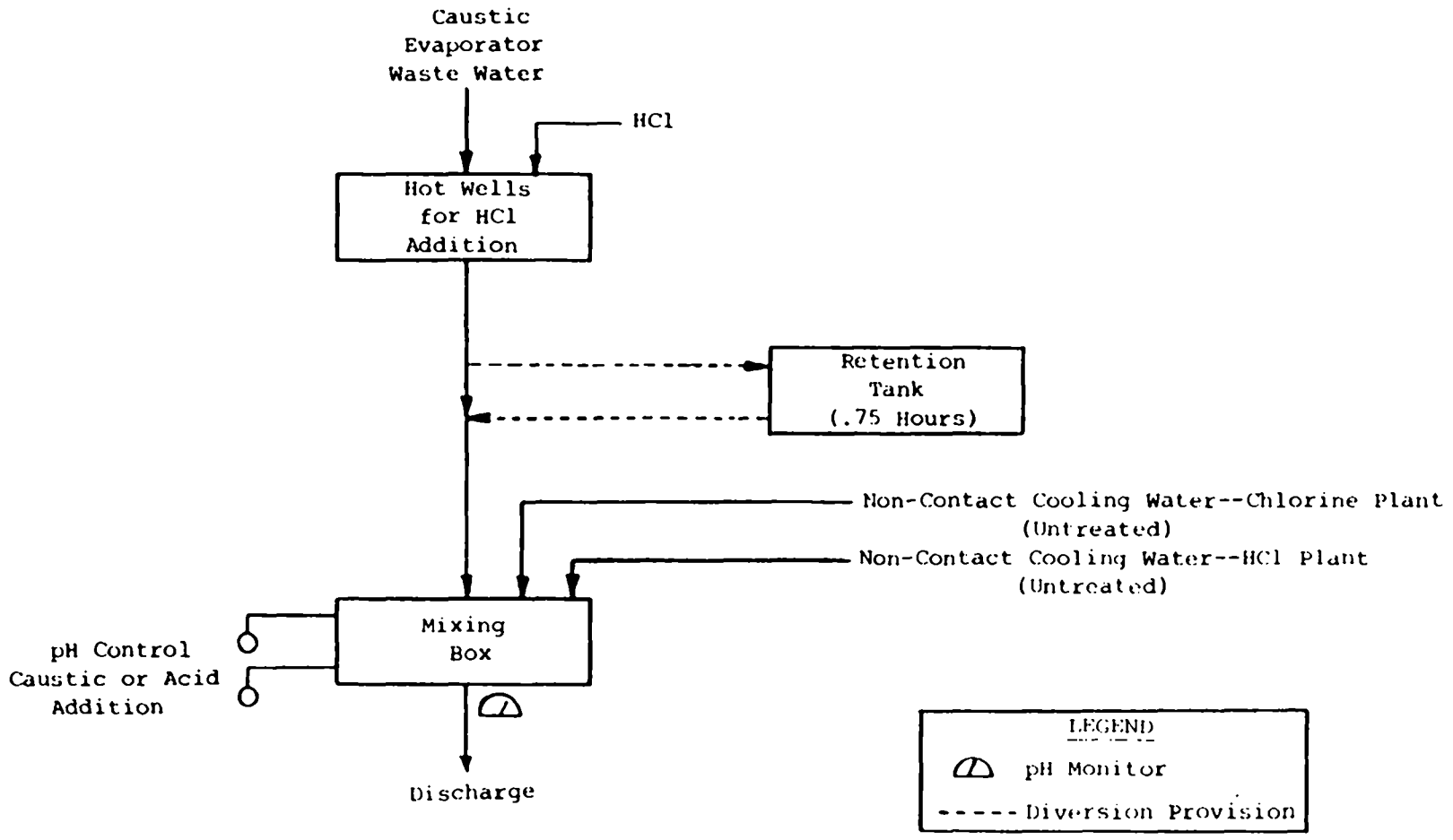

Figure A-3. Simplified Flow Diagram of the Waste Water Treatment System of Plant #150.

manually to neutralize the cooling tower effluent before discharge. In the shell and tube heat exchangers, the effluent cooling water is also monitored for pH and when a leak is detected, the water pressure is increased to stop the flow of acid in the cooling water until the unit is fixed. The water from the exchangers is mixed with the treated waste water before final discharge.

In the treatment system, the acid purge (from refinery spent acid), spills and leaks are sent to a reaction tank where caustic is added to bring the pH to 9. The reactor is operated in a batch mode and one to three batches are reacted each day, depending on the production. The effluent from the reaction tank is sent to a settling tank where precipitated solids, if any, are settled out. The effluent from the settling tank is mixed with the non-contact cooling water and is discharged through a single outfall. The pH probe is located in the circulating pump liner where a part of the discharge flow is pumped to the probe for monitoring. Figure A-4 is a simplified illustration of the treatment system of Plant #491.

PLANT #586 TRIP REPORT

Plant #586 was visited for the purpose of obtaining data for the Inorganic Chemicals pH Study for the Sodium Bisulfite Subcategory. Plant #586 does not produce sodium bisulfite, but a very closely related product, sodium metabisulfite (MBS). Also produced at Plant #586 are one organic product and three other inorganic products. Sodium metabisulfite is manufactured by the reaction of sulfur dioxide with sodium carbonate, and the subsequent crystallization of the resulting sodium bisulfite solution. The sulfur dioxide necessary for this process is made at the MBS plant.

Waste water from the sodium metabisulfite process, which includes tank cleaning, floor wash, and scrubber water, goes to a sump for lime addition (20-30 percent slurry). There it is mixed with waste from the organic plant, which has undergone biological treatment, and raw waste from the inorganic product 2 plant. From the sump, the waste water is pumped to an aeration tank (#1, Figure A-5) to convert the sulfites into sulfates. Joining the flow at this point is waste water from the inorganic product 3 plant and from what is labeled the Hydro Sump. This sump, at one time, served as the first point of treatment for the facility's inorganic product 4 plant, but a change in process due to high sulfate concentrations in the waste has now eliminated flow from the inorganic product 4 plant. The sump is now used for some laboratory wastes, truck washings, and irregular wastes (e.g., washdowns, etc.) from the inorganic product 4 plant and organic production area.

Water from the inorganic product 3 process is sent through a clarifier, a settling basin and a settling pond to remove the heavy metals prior to entering the #1 aeration tank. After aeration, the water is sent for settling of calcium sulfate in a

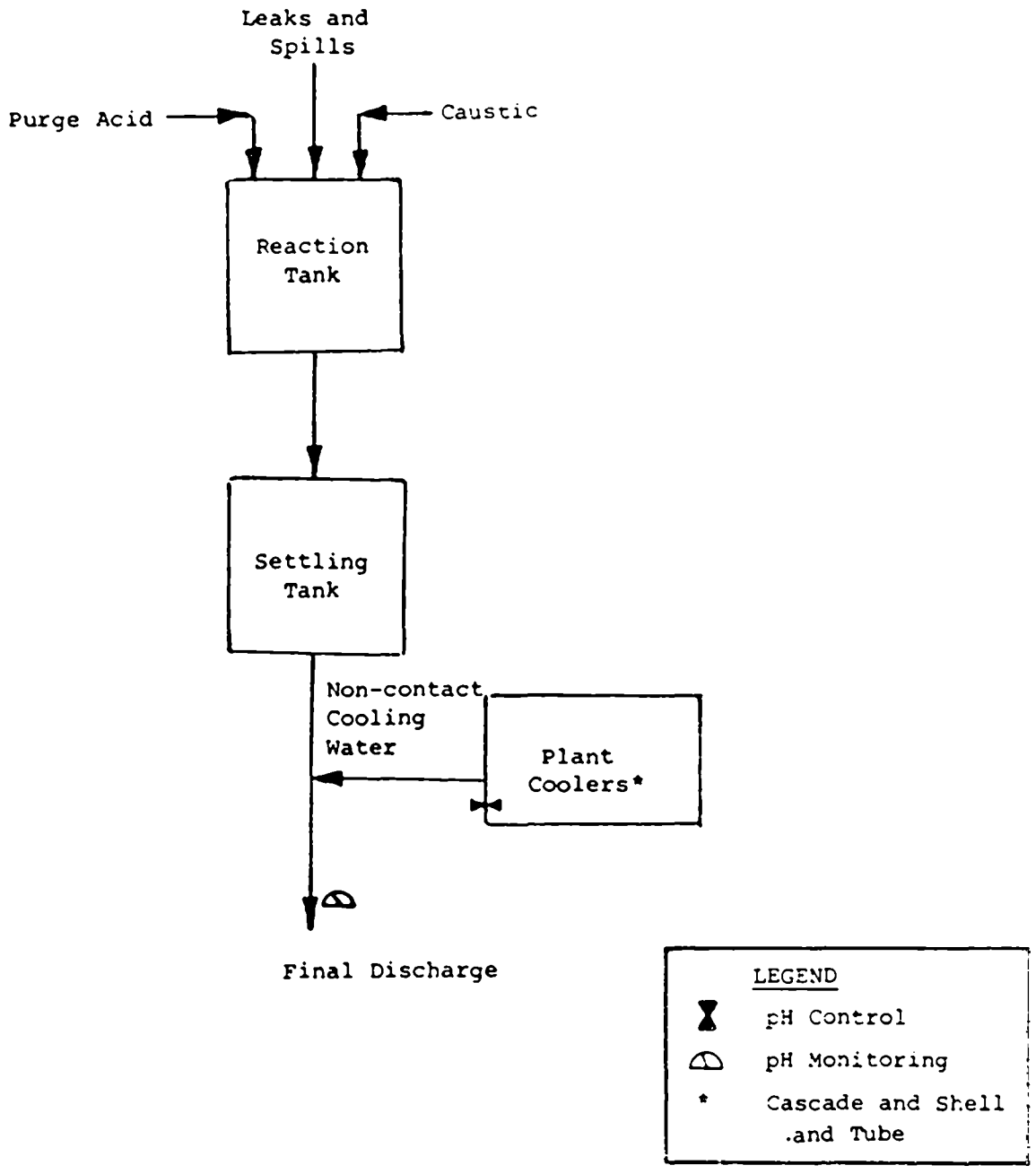

Figure A-4. Simplified Flow Diagram of the Treatment System of Plant #491 (Sulfuric Acid Subcategory).

series of three ponds, with the last, the polishing pond, containing an aerator to supply the necessary oxygen supply for aquatic life upon discharge to the river. The pH monitor is placed at the effluent of the polishing pond. Figure A-5 is a simplified flow diagram of the waste water treatment system.

The pH is controlled at two points and monitored at six points within the treatment system including the final outfall. The first monitoring points are located just prior to and just following the equalization tank in the organic product biological treatment portion of the system. Between the equalization tank and the organic waste aeration tank, the pH is adjusted to a range suitable for the bacteria used. Normally, sulfuric acid is added at this point to lower the pH, but presently sodium carbonate is being added due to a high concentration of nitrates.

The major pH adjustment takes place in the MBS sump. Here, lime addition takes place via an automatic feedback system that utilizes a pneumatic device which acts basically as an on-off mode of control. This system responds to a probe at the sump, however, the system may be manually operated and often is in response to readings from the #1 aeration tank. After the #1 aeration tank, no pH adjustment takes place, other than the leveling off effect of the settling ponds.

It should be noted that although biological treatment is present in this system, all biological treatment of organic product takes place prior to mixing with the waste streams of the inorganic compounds. Therefore, the pH control after this mixing may be considered specifically for the purpose of controlling waste pH of the inorganic industry as a whole.

PLANT #664 TRIP REPORT

Plant #664 was visited for review of the pH continuous monitoring charts of the discharged treated/untreated waste waters for the Hydrofluoric Acid Subcategory.

Two products, hydrofluoric acid and sulfuric acid, are manufactured at Plant #664. The process waste waters from the hydrofluoric acid plant are treated separately and a major portion is recycled and a small portion is discharged as a purge.

The pH is not monitored continuously on the discharge purge.

Grab samples are taken every 2 hours and analyzed for pH and other pollutants. The NPDES permit does not require the plant to monitor the pH continuously. The non-contact cooling waters from hydrofluoric acid and sulfuric acid plants are combined and discharged through a separate outfall. The pH of the discharge is monitored continuously. The pH excursion data was collected for this outfall for it was the only discharge that was monitored continuously and available for review. The collected data represents only a portion of that needed to truly be representative of the hydrofluoric acid subcategory, and is

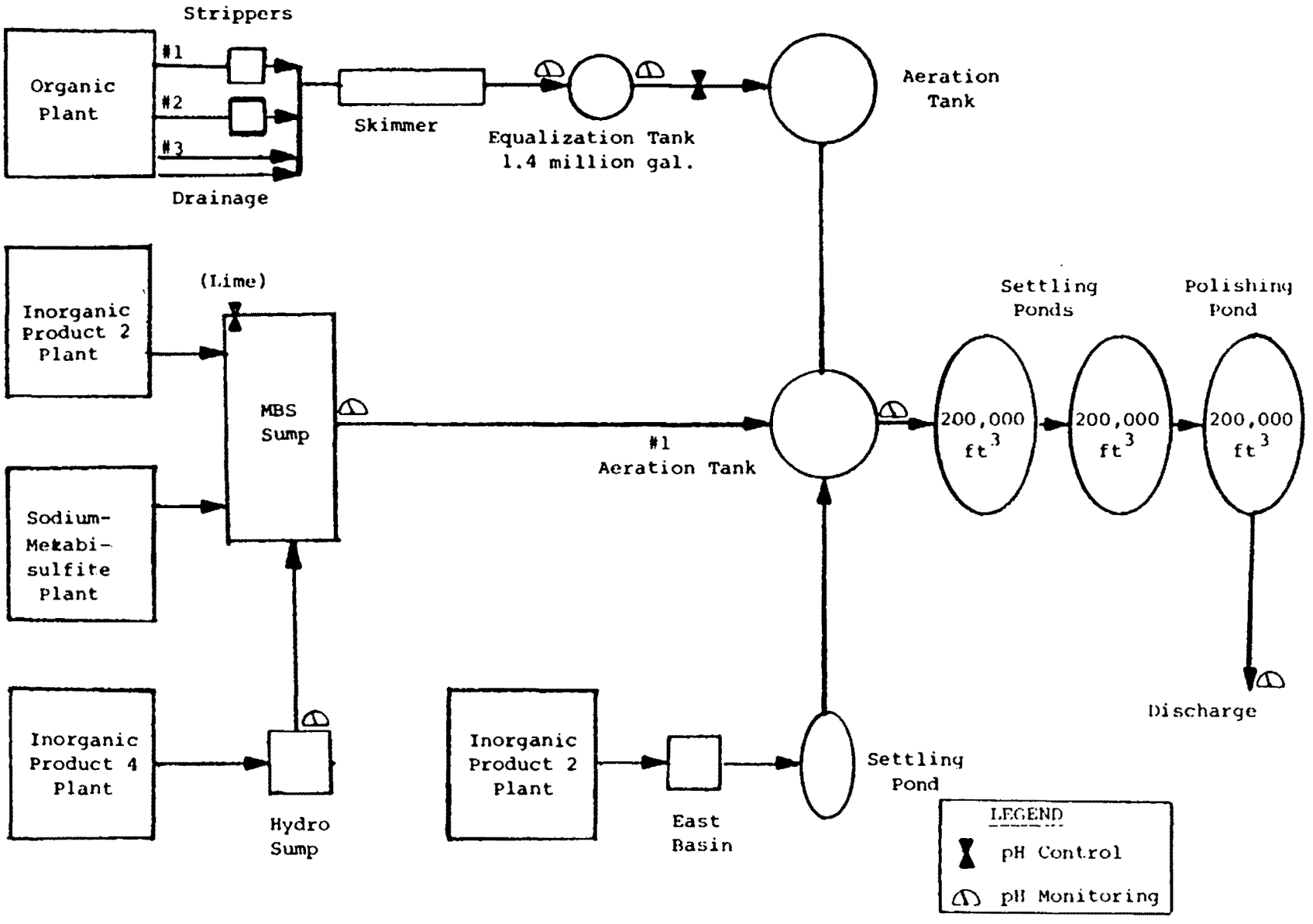

Figure A-5. Block Diagram of Treatment System for Plant #586.

probably in all actuality more representative of the sulfuric acid subcategory, as non-contact cooling is generally the only waste for H_2SO_4.

The gypsum slurry and scrubber waste water from the hydrofluoric acid process is sent to a neutralization tank where it is reacted with soda ash. Storm runoff from the plant area is also sent to the neutralization tank. The effluent from the neutralization tank is sent to one of the two settling ponds. One pond is cleaned while the other one is in operation and vice-versa. A majority of the solids settle in the ponds. The overflow from the pond goes to the final settling pond. A major portion of the effluent from the final settling pond (about 90%) is sent to the process for reuse and the rest is discharged as a purge. As mentioned earlier, grab samples are collected every 2 hours and analyzed for pH and other pollutants. The plant personnel claimed that they never had an excursion (from the grab samples data) outside the 6-9 range since they started using sodium carbonate for neutralization a few years back. Prior to using soda ash, they used lime and had scaling problems in the recycled water.

Another pond does exist next to the final settlng pond where backwash filter water from the sulfuric acid process is sent. This pond is also intended for storage of water resulting from any emergency operation. A small quantity of liquid was present in the surge pond at the time of the plant visit. Figure A-6 is a block diagram of the treatment system.

The non-contact cooling waters from the hydrofluoric and sulfuric acid processes are discharged through a second, separate outfall. When a leak occurs, a standby automatic bicarbonate system is activated. Whenever the continuous pH monitor sees an excursion below pH 6, it opens up the bicarbonate feed valve and the waste water is neutralized. If the leak is from the non-contact sulfuric acid coolers, the water (only H_2SO_4 non-contact cooling) is diverted to the HF neutralization tank until the leak is stopped and the heat exchanger can be returned to normal operation. Figure A-6 is a simplified block diagram of the waste water treatment system. The bicarbonate system was chosen because of the buffering capabilities of the sodium bicarbonate. This enables the plant to correct for acidic waste using an excess of bicarbonate without the typical "overshooting" problem, because the pH of the buffered water will not exceed the pH limit of 9. At first there were difficulties with the system, as the sodium bicarbonate would reduce to sodium carbonate. This problem was solved by continuously circulating the bicarbonate solution. It was also found that if air was mixed at a controlled rate, the neutralizing capabilities of the bicarbonate increased, while not significantly reducing the buffering effect.

It should be noted that this system is only cost effective if the cooling water leaks and spills are well curtailed because of the high cost of bicarbonate.

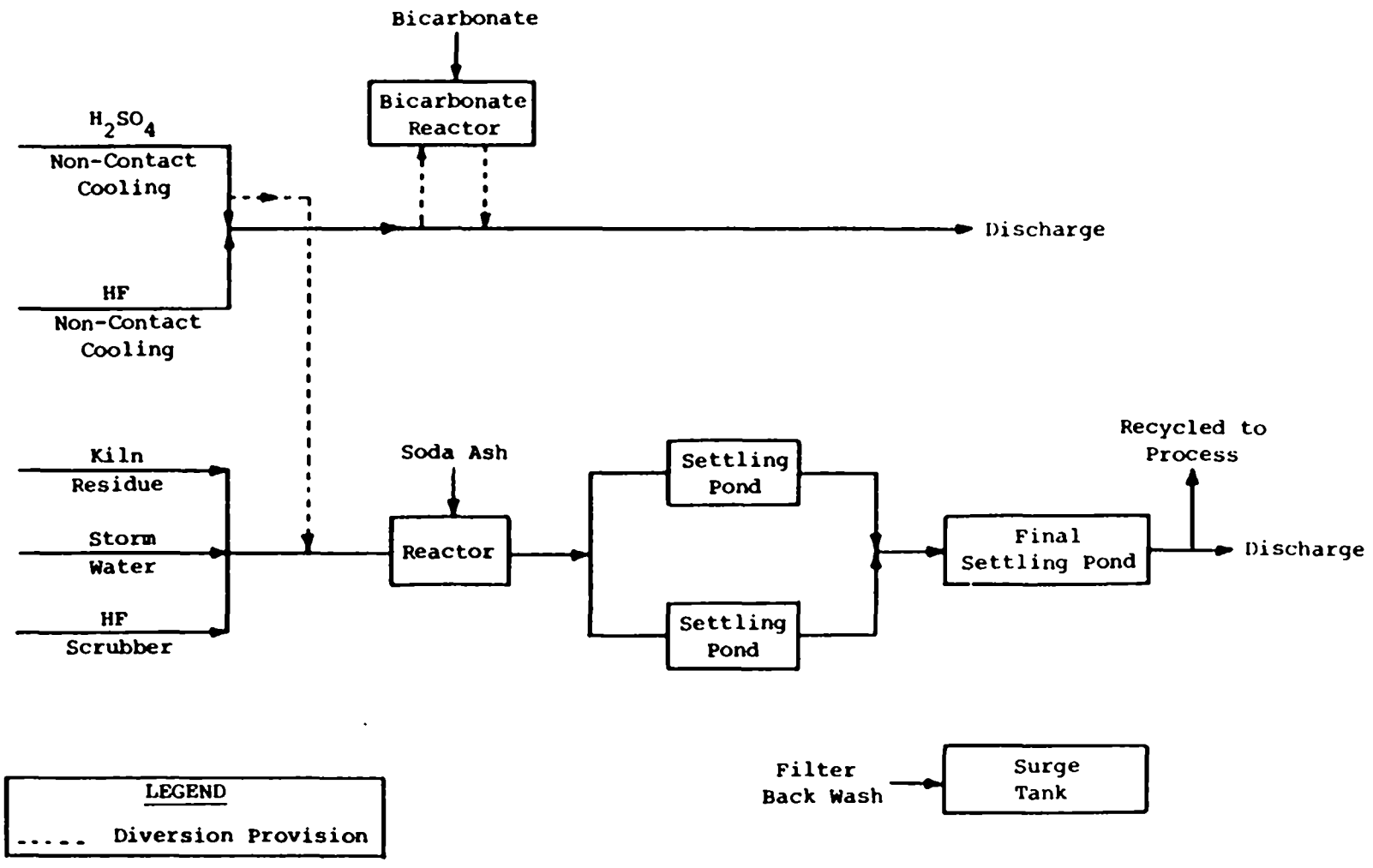

Figure A-6. Simplified Block Diagram of the Waste Water Treatment System of Plant #664.

PLANT #782 TRIP REPORT

Plant #782 was visited for the purpose of obtaining data for the inorganic chemicals pH study (Hydrogen Cyanide Subcategory). Hydrogen Cyanide (HCN) is one of many compounds including various organics that are manufactured at Plant #782. The facilities operate three plants using the Andrussow Process to produce hydrogen cyanide with two plants adding an additional step to produce acetone-cyanhydrin (ACN) via the combination of acetone and hydrogen cyanide. These two products are then used captively at the plant for production of organic products.

The waste water treatment system is a single-stage biological system designed to handle the variety of raw wastes from the numerous products made at Plant #782. Included in the system is a grit chamber, a primary and secondary API, an aerated lagoon, a flocculator, and a clarifier (see Figure A-8).

Waste entering the system does so from three separate areas in the plant, the North, East, and West. Waste water flows through the treatment system via two major routes. The first route is that of the chemical sewers. Here the waste water passes through a grit chamber and a primary API into a compositing pond where it is joined by a waste acid stream from an acid process. From there the water flows through a secondary API and into an aerated lagoon with a 14 day retention time. After aeration, the water goes to a flocculator, and proceeds to a clarifier where it is mixed with water following the second route. The total waste water at this point is sent to final discharge.

The water channeled in the second route is comprised of runoff, washdown, etc., entering via surface sewers from each of the plant's three areas. This water is first sent to a surface pond where it undergoes a two-stage pH adjustment and then is piped to a trickling filter. It then merges with the treated chemical wastes in the clarifier.

Products contributing to the waste streams of each area are listed along with flow of each area stream and its entering pH in Figures A-7 and A-8.

Waste from the HCN process enters the east chemical sewer as a combined HCN-ACN waste and cannot be separated from the ACN waste. A .649 mgd flow from the hydrogen cyanide plants (including ACN) is mixed with a 10 gpm flow of organic product 1 waste and is sent to an ammonia stripper. After stripping, an 80 gpm organic product 2 waste stream plus a 100 to 120 gpm organic product 3 waste flow make up the final constituents of the east chemical sewer.

Raw HCN-ACN waste enters the east chemical sewer at a pH of approximately 2.0. The sewer flow remains about 2.0 until the stripping process where it rises to a pH of 12.5. The additional waste streams, post stripping, do not significantly affect the 12.5 pH. This stream then enters the treatment facility. In the

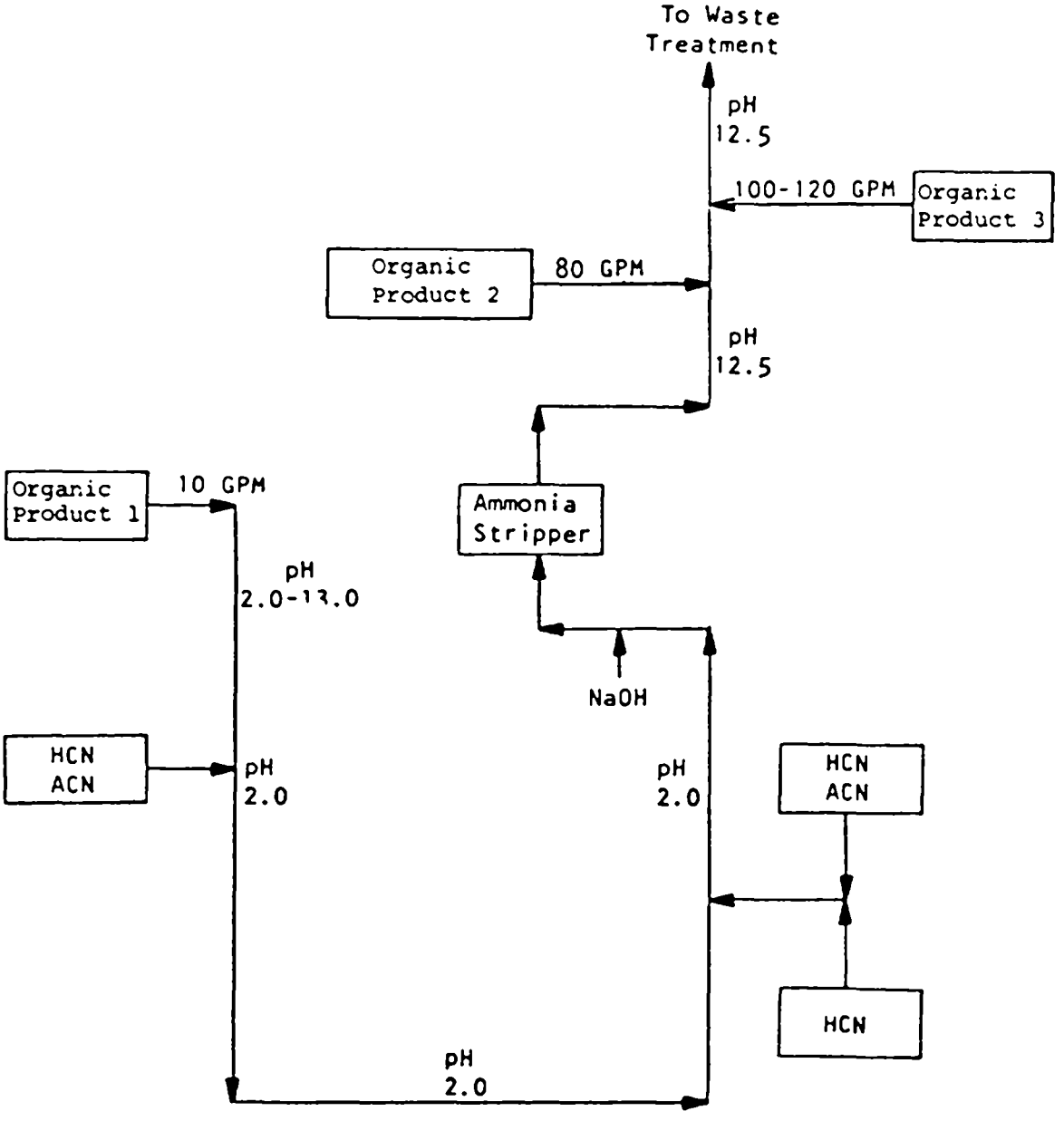

Figure A-7. Plant #782 East Chemical Sewer.

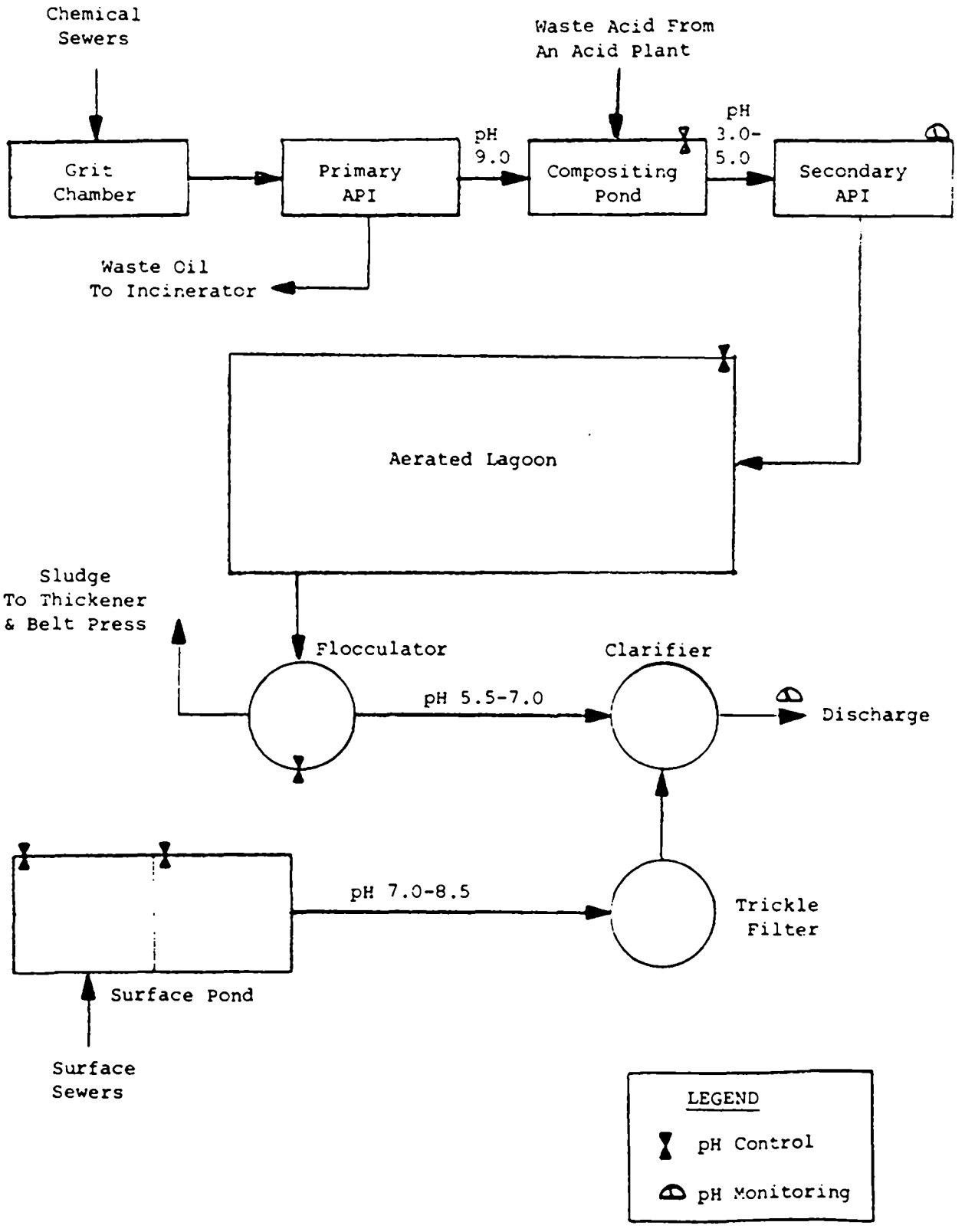

Figure A-8. Block Diagram of Treatment System for Plant #782.

treatment system, the waste water (chemical sewer) is mixed with the waste acid stream which brings the pH down and then the pH is adjusted to 7 in the secondary API Separator, necessary for the BOD treatment in the aerated lagoon.

The surface sewers go through a two-stage automatic neutralization in the surface pond. Practical and effective pH adjustment is made in the surface pond water which blends with treated waste water just past the clarifier. Water from the surface pond leaves at a pH of 7.0 to 8.5. It is kept slightly basic in order to balance the slightly acidic water (originally from the chemical sewers and the acid plant) in the clarifier. The pH controls and monitors are marked on the treatment system diagram shown in Figure A-8. Should the pH be out of specification at discharge, the pH would be adjusted by hand at the clarifier until necessary steps could be taken.

The pH records at this plant were kept fairly well. The number of excursions ranks in the low to average range except for the month of March, 1979, during which time heavy rains caused many problems. Rain overflow, especially in the North Surface Drain, is the most frequent cause of pH excursions not only in March, but throughout the year.

It should be noted that Plant #782 treatment system is not typical of the inorganic industry in that it is a biological treatment system. The very nature of the biological system requires a close monitoring of the pH throughout treatment to insure the life of the bacteria used. This close monitoring is not necessarily typical in the inorganic industry. Plant #782 was chosen because it is the <u>only</u> Hydrogen Cyanide plant using the Andrussow Process that has the data required for this study.

PLANT #786 TRIP REPORT

Plant #786 was visited for review of the pH control system and collection of the pH excursion data for the Sodium Silicate Subcategory. The waste water from the plant consisting of contact cooling water, non-contact cooling water, rainfall runoff, and tank car washings, etc., are combined and sent to a sump containing a mixer where it is neutralized with concentrated sulfuric acid. The neutralization tank is equipped with an on-off controller, using feedback mode for the addition of acid.

The reacted solution is then sent to the retention pond where the suspended solids, if present, are allowed to settle. The pond has blue gill fish and turtles. The turtles have been resident in the pond since the pond was built. Blue gill fish have been in residence for several years; however, being more pH-susceptible, their population varies with pH conditions in the pond. The retention time of the waste water in the pond is approximately 4-5 days. The effluent from the pond is discharged through a sluice gate. The flow, temperature, and pH are monitored continuously prior to discharge through the gate. When the pH of the discharged effluent falls outside the 6-9 range,

the gate is closed to stop the discharge. The water in the pond is sometimes mixed using a portable pump to mix and smooth out the excursions at the time the discharge is blocked.

PLANT #928 TRIP REPORT

Plant #928 was visited for collection of pH excursion data for Hydrofluoric Acid and Aluminum Fluoride Subcategories. In addition to hydrofluoric acid and aluminum fluoride, Plant #928 also makes organic and other inorganic products, fertilizer chemicals, and nitric acid.

The process waste water from hydrofluoric acid and aluminum fluoride products are combind, treated and discharged separately from the other product waste water. The process waste waters from aluminum fluoride and hydrofluoric acid units (including gypsum slurry) is sent to a pond (called "gypsum stack" by the plant) where the suspended solids are separated. The rainwater runoff from the two production areas is also sent to the first pond. According to plant personnel, the precipitation is higher than evaporation and the runoff is the only water that is discharged with a small amount of purge after treatment. The pH of the water in the pond is approximately 1.5. The supernatant from the first pond goes to another pond. The effluent from the second pond is routed through two different paths. In the first course, almost all the water coming from the process is recycled for reuse, and the runoff water and a small amount of purge is sent to the fluoride treatment system through the second path.

In the fluoride treatment system, the water coming from the second pond is reacted with 10% lime slurry. The waste water gets neutralized along with the fluoride precipitation. The residence time of waste water in the reactor is 5 minutes. The reacted waste water is sent to a clarifier. The underflow from the clarifier is returned to the first pond. The clarifier overflow is sent to a holding tank. The holding tank effluent is discharged to the river through two alternate pipes, each 5000 feet long. One pipeline is used for effluent discharge while the other one is being cleaned/flushed with the river water for scale removal. At the dicharge point, the treated waste water is monitored continuously for pH, temperature, and flow. Whenever a low pH is observed, the effluent from the holding pond is diverted to the first pond instead of being discharged. Figure A-9 is a simplified block diagram of the waste water treatment system.

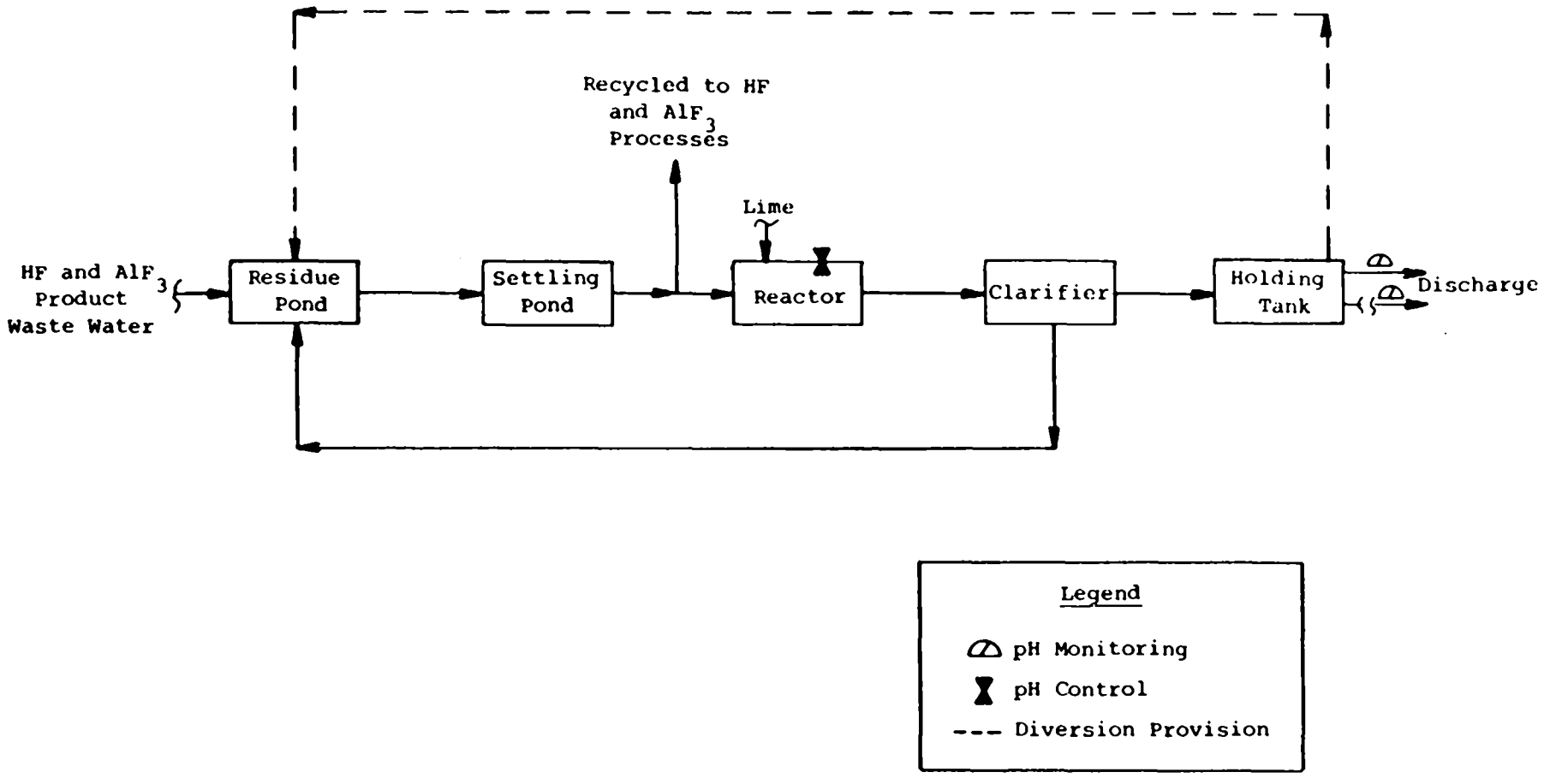

Figure A-9. Simplified Block Diagram of Waste Water Treatment System of Plant #928.

A.3 pH EXCURSION DATA

The collected excursion data includes date, time, reason (in the form of a code) and remarks, if any, for each pH excursion. A brief explanation of the codes is given in Table A-1.

TABLE A-1. EXPLANATION OF EXCURSION REASON-CODES

Reason-Code	Brief Description
1*	Process upset
2*	Waste water treatment upset or shutdown
3	pH recorder instrument error
4	pH monitoring instrument calibration
5*	Operator error in the operation of the waste water treatment equipment/system
6	Diversion operation. The discharge flow was interrupted or diverted to a pond or back to the neutralization unit. Even though there was no discharge, the pH recorder showed an excursion due to its placement.
7	Other - any non-actual excursion that could be explained by a reason other than listed in the codes.
8*	Unknown
9*	Emergency operation--plant shutdown, power failure, etc.
10*	Spills or leaks
11*	Storm water runoff. Excursions resulting from treatment system overload because of heavy rain or storms.
12*	Other - any actual excursion that could be explained by a reason other than listed in the codes.

* Classified as an actual excursion.

PLANT	MO.	DAY	YEAR	TIME.	PH...	MIN..	CODE	REASON.....	EXPLANATION.....
102	04	03	1978	0500	10.5	3600	1	PROCESS UPSET	SCRUBBER DISCHARGE FROM OTHER PROCESS
102	08	12	1978	1045	9.5	85	2	TREATMENT SYSTEM MALFUNCTION - SHUTDOWN	CONTROL PROBLEM IN NEUTRALIZATION TANK
102	09	01	1978	0200	10.6	3360	1	PROCESS UPSET	SCRUBBER DISCHARGE FROM OTHER PROCESS(EXCESS CAUSTIC FROM SCRUBBER BLOW-DOWN)
102	09	26	1978	0900	9.8	1110	2	TREATMENT SYSTEM MALFUNCTION - SHUTDOWN	LIME CONTROL MALFUNCTION
102	11	17	1978	1720	3.6	540	10	SPILLS OR LEAKS	EXCURSION FROM NON-CONTACT COOLING WATER DISCHARGE OUTFALL. RESULTED FROM A RUPTURED HOSE IN THE SULFURIC ACID UNLOADING STATION.
102	01	12	1979	0630	10.2	390	2	TREATMENT SYSTEM MALFUNCTION - SHUTDOWN	LIME CONTROL MALFUNCTION-NEUTRALIZATION TANK
102	02	16	1979	1550	10.5	85	2	TREATMENT SYSTEM MALFUNCTION - SHUTDOWN	LIME CONTROL MALFUNCTION
102	03	3	1979	1025	3.5	285	10	SPILLS OR LEAKS	LEAK IN A COOLER, RECORDED IN NON-CONTACT COOLING OUTFALL.
102	03	03	1979	2100	4.0	300	11		FAILURE OF PUMPS TO HANDLE STORM WATER RUN-OFF
102	06	22	1979	1530	5.9	3600	2	TREATMENT SYSTEM MALFUNCTION - SHUTDOWN	SHORT CIRCUITING OF ORGANIC PLANT POND
102	06	24	1979	1130	4.8	150	2	TREATMENT SYSTEM MALFUNCTION - SHUTDOWN	SEE 6/22/79
102	06	25	1979	1025	9.4	20	2	TREATMENT SYSTEM MALFUNCTION - SHUTDOWN	SEE 6/22/79
102	06	25	1979	1445	9.1	2	2	TREATMENT SYSTEM MALFUNCTION - SHUTDOWN	SEE 6/22/79
102	06	26	1979	1420	9.4	5	2	TREATMENT SYSTEM MALFUNCTION - SHUTDOWN	SEE 6/22/79
102	06	27	1979	0820	10.0	45	2	TREATMENT SYSTEM MALFUNCTION - SHUTDOWN	SEE 6/22/79
102	06	27	1979	1620	9.2	1	2	TREATMENT SYSTEM MALFUNCTION - SHUTDOWN	SEE 6/22/79

PLANT	MO.	DAY	YEAR	TIME.	PH...	MIN..	CODE	REASON.....	EXPLANATION.....
102	07	02	1979	1930	9.2	40	2	TREATMENT SYSTEM MALFUNCTION - SHUTDOWN	SEE 6/22/79
102	07	04	1979	0830	10.0	10	2	TREATMENT SYSTEM MALFUNCTION - SHUTDOWN	SEE 6/22/79
102	07	6	1979	1130	9.9	90	2	TREATMENT SYSTEM MALFUNCTION - SHUTDOWN	SEE 6/22/79
102	07	07	1979	0800	9.1	3	2	TREATMENT SYSTEM MALFUNCTION - SHUTDOWN	SEE 6/22/79
102	07	07	1979	1730	9.3	120	2	TREATMENT SYSTEM MALFUNCTION - SHUTDOWN	SEE 6/22/79
102	07	08	1979	2100	9.3	45	2	TREATMENT SYSTEM MALFUNCTION - SHUTDOWN	SEE 6/22/79
102	07	11	1979	0500	4.9	75	2	TREATMENT SYSTEM MALFUNCTION - SHUTDOWN	SEE 6/22/79
102	07	11	1979	2200	9.6	150	2	TREATMENT SYSTEM MALFUNCTION - SHUTDOWN	SEE 6/22/79
102	07	12	1979	0930	9.5	120	2	TREATMENT SYSTEM MALFUNCTION - SHUTDOWN	SEE 6/22/79
102	07	13	1979	0930	9.2	75	2	TREATMENT SYSTEM MALFUNCTION - SHUTDOWN	SEE 6/22/79
102	07	14	1979	0700	9.6	1	2	TREATMENT SYSTEM MALFUNCTION - SHUTDOWN	SEE 6/22/79
102	07	15	1979	1330	9.5	120	2	TREATMENT SYSTEM MALFUNCTION - SHUTDOWN	SEE 6/22/79

PLANT	MO.	DAY	YEAR	TIME.	PH...	MIN..	CODE	REASON.....	EXPLANATION.....
150	01	17	1979	1718	5.2	19	1	PROCESS UPSET	ACID AREA
150	01	25	1979	1417	9.2	2	8	UNKNOWN	UNKNOWN
150	01	26	1979	0715	9.2	7	2	TREATMENT SYSTEM MALFUNCTION - SHUTDOWN	TREATMENT SYSTEM MALFUNCTION
150	02	6	1979	1105	9.1	5	8	UNKNOWN	
150	02	7	1979	1305	3.7	5	8	UNKNOWN	
150	02	8	1979	0900	3.6	15	3	INSTRUMENT ERROR	
150	02	10	1979	0108	4.7	17	10	SPILLS OR LEAKS	DRYING TOWER LEAK
150	02	10	1979	2330	9.1	4	1	PROCESS UPSET	CAUSTIC AREA
150	02	11	1979	1705	9.1	3	8	UNKNOWN	
150	02	16	1979	1640	9.2	6	8	UNKNOWN	
150	02	16	1979	2107	3.0	47	1	PROCESS UPSET	ACID AREA
150	02	21	1979	1321	9.3	15	1	PROCESS UPSET	CAUSTIC AREA
150	02	21	1979	1520	9.4	25	1	PROCESS UPSET	CAUSTIC AREA - EVAPORATORS
150	03	3	1979	0515	9.3	106	5	OPERATOR ERROR	OPERATOR ERROR RESULTING IN RETENTION TANK OVERFLOW, CAUSED A MAJOR CLEANUP AND EXCURSION PROBLEM.
							10	SPILLS OR LEAKS	
150	03	3	1979	0710	3.3	3	5	OPERATOR ERROR	
150	03	3	1979	0715	9.4	5	5	OPERATOR ERROR	THE REMAINDER OF THE EXCURSIONS FROM MARCH 3 THROUGH MARCH 5 RESULT FROM ATTEMPTS TO CORRECT TANK OVERFLOW
150	03	3	1979	0720	2.5	4	5	OPERATOR ERROR	
150	03	3	1979	0725	9.5	3	5	OPERATOR ERROR	
150	03	3	1979	0730	3.3	10	5	OPERATOR ERROR	
150	03	3	1979	0740	9.3	3	5	OPERATOR ERROR	
150	03	3	1979	0745	4.1	4	5	OPERATOR ERROR	
150	03	4	1979	0842	9.4	4	5	OPERATOR ERROR	
150	03	4	1979	0917	9.2	12	5	OPERATOR ERROR	
150	03	4	1979	0930	3.6	5	5	OPERATOR ERROR	
150	03	4	1979	0945	9.3	32	5	OPERATOR ERROR	
150	03	4	1979	1020	10.6	39	5	OPERATOR ERROR	
150	03	4	1979	1445	9.1	3	5	OPERATOR ERROR	
150	03	4	1979	2305	9.1	2	5	OPERATOR ERROR	
150	03	5	1979	0410	9.1	10	5	OPERATOR ERROR	
150	03	5	1979	0502	9.3	11	5	OPERATOR ERROR	
150	03	5	1979	0517	9.2	3	5	OPERATOR ERROR	
150	03	5	1979	0520	9.2	1	5	OPERATOR ERROR	
150	03	5	1979	0530	9.2	3	5	OPERATOR ERROR	
150	03	5	1979	0537	9.2	3	5	OPERATOR ERROR	
150	03	5	1979	0542	9.2	3	5	OPERATOR ERROR	
150	03	5	1979	0550	9.2	3	5	OPERATOR ERROR	
150	03	5	1979	0555	9.2	3	5	OPERATOR ERROR	
150	03	5	1979	0603	9.2	3	5	OPERATOR ERROR	
150	03	5	1979	0607	9.2	3	5	OPERATOR ERROR	

PLANT	MO.	DAY	YEAR	TIME.	PH...	MIN..	CODE	REASON.....	EXPLANATION.....
150	03	5	1979	0616	9.2	3	5	OPERATOR ERROR	
150	03	5	1979	0620	9.2	3	5	OPERATOR ERROR	
150	03	5	1979	0630	9.2	3	5	OPERATOR ERROR	
150	03	5	1979	0637	9.2	3	5	OPERATOR ERROR	
150	03	5	1979	0642	9.2	3	5	OPERATOR ERROR	
150	03	5	1979	0650	9.2	3	5	OPERATOR ERROR	
150	03	5	1979	0657	9.3	4	5	OPERATOR ERROR	
150	03	5	1979	0703	9.3	3	5	OPERATOR ERROR	
150	03	5	1979	0710	9.3	3	5	OPERATOR ERROR	
150	03	5	1979	0715	9.3	5	5	OPERATOR ERROR	
150	03	5	1979	0828	9.3	21	4	INSTRUMENT CALIBRATION	
150	03	8	1979	1245	9.7	2	2	TREATMENT SYSTEM MALFUNCTION - SHUTDOWN	
150	03	8	1979	2130	4.5	5	2	TREATMENT SYSTEM MALFUNCTION - SHUTDOWN	
150	03	8	1979	2145	9.6	6	2	TREATMENT SYSTEM MALFUNCTION - SHUTDOWN	
150	03	8	1979	2150	9.1	2	2	TREATMENT SYSTEM MALFUNCTION - SHUTDOWN	
150	03	8	1979	2202	3.7	3	2	TREATMENT SYSTEM MALFUNCTION - SHUTDOWN	
150	03	8	1979	2207	5.2	10	2	TREATMENT SYSTEM MALFUNCTION - SHUTDOWN	
150	03	8	1979	2218	9.5	5	2	TREATMENT SYSTEM MALFUNCTION - SHUTDOWN	
150	03	9	1979	0350	3.3	3	2	TREATMENT SYSTEM MALFUNCTION - SHUTDOWN	
150	03	9	1979	0405	4.5	3	2	TREATMENT SYSTEM MALFUNCTION - SHUTDOWN	
150	03	9	1979	0520	3.3	11	2	TREATMENT SYSTEM MALFUNCTION - SHUTDOWN	
150	03	9	1979	1114	5.8	1	8	UNKNOWN	
150	03	10	1979	1900	5.0	1	8	UNKNOWN	
150	03	11	1979	2045	4.8	2	8	UNKNOWN	
150	03	11	1979	2100	4.8	1	8	UNKNOWN	
150	03	12	1979	1715	5.8	15	8	UNKNOWN	
150	03	13	1979	0840	9.3	3	8	UNKNOWN	
150	03	13	1979	0950	4.2	5	8	UNKNOWN	
150	03	13	1979	1435	4.6	2	8	UNKNOWN	
150	03	18	1979	0745	9.2	7	12		RELAY SWITCH TO PH ALARM HAD BEEN PULLED;THEREFORE PH ALARM DID NOT SOUND AND PH WAS NOT CORRECTED.

PLANT	MO.	DAY	YEAR	TIME.	PH...	MIN..	CODE	REASON.....	EXPLANATION.....
150	03	18	1979	0955	9.2	2	12		
150	03	18	1979	1148	5.6	2	12		
150	03	20	1979	0715	3.0	120	3	INSTRUMENT ERROR	TENSION IN RECORDER LINE FAULTY
150	03	23	1979	0650	9.4	7	3	INSTRUMENT ERROR	
150	03	23	1979	0805	4.2	3	3	INSTRUMENT ERROR	
150	03	23	1979	0945	5.0	2	3	INSTRUMENT ERROR	
150	03	24	1979	0013	5.4	1	3	INSTRUMENT ERROR	
150	03	24	1979	0850	9.1	4	1	PROCESS UPSET	EVAPORATORS
150	03	27	1979	0716	9.1	2	8	UNKNOWN	
150	03	27	1979	1155	9.1	3	8	UNKNOWN	
150	03	30	1979	0750	9.3	28	1	PROCESS UPSET	CAUSTIC AREA
150	03	30	1979	0900	9.2	27	1	PROCESS UPSET	CAUSTIC AREA
150	03	31	1979	0715	9.3	13	1	PROCESS UPSET	CAUSTIC AREA
150	03	31	1979	1305	9.1	2	1	PROCESS UPSET	CAUSTIC AREA
150	03	31	1979	2015	9.3	13	1	PROCESS UPSET	CAUSTIC AREA
150	03	31	1979	2115	5.0	10	1	PROCESS UPSET	CAUSTIC AREA
150	04	1	1979	0740	9.1	10	1	PROCESS UPSET	CAUSTIC AREA
150	04	4	1979	1325	3.4	42	3	INSTRUMENT ERROR	
150	04	5	1979	0750	2.6	24	1	PROCESS UPSET	ACID AREA
150	04	5	1979	1450	3.9	14	1	PROCESS UPSET	ACID AREA
150	04	7	1979	1650	9.1	9	2	TREATMENT SYSTEM MALFUNCTION - SHUTDOWN	RETENTION TANK OVERFLOW REQUIRED MANUAL OPERATION OF TREATMENT SYSTEM. OVERFLOW ACCOUNTED FOR EXCURSIONS THROUGH 4-19.
150	04	7	1979	2050	9.1	37	2	TREATMENT SYSTEM MALFUNCTION - SHUTDOWN	
150	04	15	1979	1030	4.3	3	2	TREATMENT SYSTEM MALFUNCTION - SHUTDOWN	
150	04	16	1979	2110	9.1	6	2	TREATMENT SYSTEM MALFUNCTION - SHUTDOWN	
150	04	16	1979	2130	9.1	2	2	TREATMENT SYSTEM MALFUNCTION - SHUTDOWN	
150	04	16	1979	2315	4.3	1	2	TREATMENT SYSTEM MALFUNCTION - SHUTDOWN	
150	04	16	1979	2320	4.2	5	2	TREATMENT SYSTEM MALFUNCTION - SHUTDOWN	
150	04	17	1979	0905	9.1	5	8	UNKNOWN	
150	04	19	1979	0905	9.1	5	2	TREATMENT SYSTEM MALFUNCTION - SHUTDOWN	
150	04	19	1979	0915	9.1	2	2	TREATMENT SYSTEM MALFUNCTION - SHUTDOWN	

PLANT	MO.	DAY	YEAR	TIME.	PH...	MIN..	CODE	REASON.....	EXPLANATION.....
150	04	19	1979	0917	9.3	8	2	TREATMENT SYSTEM MALFUNCTION - SHUTDOWN	
150	04	26	1979	0715	5.7	12	1	PROCESS UPSET	ACID AREA
150	04	26	1979	0940	5.3	1	4	INSTRUMENT CALIBRATION	
150	04	29	1979	1505	4.8	12	12		EMPTYING SCALE PIT IN ACID AREA.
150	05	7	1979	1100	3.8	7	2	TREATMENT SYSTEM MALFUNCTION - SHUTDOWN	
150	05	9	1979	1445	5.7	5	7	OTHER	TESTING PURPOSES
150	05	9	1979	1550	9.9	13	2	TREATMENT SYSTEM MALFUNCTION - SHUTDOWN	INSTRUMENT SHOWING WRONG PH LED TO TREATMENT SYSTEM MALFUNCTION AT THE RETENTION TANK.
150	05	9	1979	2130	3.7	11	2	TREATMENT SYSTEM MALFUNCTION - SHUTDOWN	SEE 1550
150	05	9	1979	2157	3.9	9	2	TREATMENT SYSTEM MALFUNCTION - SHUTDOWN	SEE 1550
150	05	10	1979	1325	4.4	3	2	TREATMENT SYSTEM MALFUNCTION - SHUTDOWN	CAUSTIC AREA
150	05	12	1979	1915	10.9	45	3	INSTRUMENT ERROR	
150	05	17	1979	0940	9.1	4	3	INSTRUMENT ERROR	
150	05	17	1979	1152	9.2	20	3	INSTRUMENT ERROR	
150	05	19	1979	0850	9.1	4	1	PROCESS UPSET	BOIL OUT (EVAPORATORS)
150	05	19	1979	1130	9.1	15	2	TREATMENT SYSTEM MALFUNCTION - SHUTDOWN	SYSTEM OVERLOAD
150	05	25	1979	0850	10.5	9	1	PROCESS UPSET	
							5	OPERATOR ERROR	
150	05	28	1979	1057	9.1	1	1	PROCESS UPSET	
150	05	30	1979	0850	10.8	13	1	PROCESS UPSET	EVAPORATORS
150	05	31	1979	0215	3.0	16	1	PROCESS UPSET	HCL AREA
150	05	31	1979	0630	9.2	4	10	SPILLS OR LEAKS	LEAK IN STEAM CHEST
150	05	31	1979	0718	9.2	7	10	SPILLS OR LEAKS	SEE 0630
150	05	31	1979	0755	9.4	15	10	SPILLS OR LEAKS	SEE 0630
150	06	2	1979	0949	10.3	10	1	PROCESS UPSET	PROCESS UPSET, THAT WAS COMPLICATED BY A PULLED RELAY SWITCH TO TREATMENT SYSTEM
							5	OPERATOR ERROR	
150	06	2	1979	1653	10.6	47	1	PROCESS UPSET	SEE 0949
							5	OPERATOR ERROR	
150	06	4	1979	0424	2.7	57	1	PROCESS UPSET	HCL PLANT
150	06	4	1979	0900	3.3	15	1	PROCESS UPSET	HCL PLANT

PLANT	MO.	DAY	YEAR	TIME.	PH...	MIN..	CODE	REASON.....	EXPLANATION.....
150	06	6	1979	1253	10.2	8	1	PROCESS UPSET	CAUSTIC PLANT (EVAPORATORS)
150	06	7	1979	0124	3.9	12	10	SPILLS OR LEAKS	ACID TANK LEAK
150	06	13	1979	1420	9.1	8	2	TREATMENT SYSTEM MALFUNCTION - SHUTDOWN	
150	06	15	1979	0710	9.2	12	1	PROCESS UPSET	EVAPORATOR BOIL OUT
150	06	15	1979	0830	5.6	2	2	TREATMENT SYSTEM MALFUNCTION - SHUTDOWN	SEE 0838
150	06	15	1979	0838	4.0	58	2	TREATMENT SYSTEM MALFUNCTION - SHUTDOWN	TREATMENT SYSTEM WAS MOVED DUE TO PLANT CONSTRUCTION.
150	06	15	1979	1027	4.1	35	2	TREATMENT SYSTEM MALFUNCTION - SHUTDOWN	SEE 0838
150	06	16	1979	1155	9.2	3	11		RAINWATEROVERFLOW
150	06	18	1979	0945	3.5	10	2	TREATMENT SYSTEM MALFUNCTION - SHUTDOWN	RESTARTING THE TREATMENT SYSTEM ACCOUNTED FOR EXCURSIONS THROUGH 1425
150	06	18	1979	1015	2.7	22	2	TREATMENT SYSTEM MALFUNCTION - SHUTDOWN	
150	06	18	1979	1047	4.7	2	2	TREATMENT SYSTEM MALFUNCTION - SHUTDOWN	
150	06	18	1979	1320	3.3	10	2	TREATMENT SYSTEM MALFUNCTION - SHUTDOWN	
150	06	18	1979	1425	5.2	3	2	TREATMENT SYSTEM MALFUNCTION - SHUTDOWN	
150	06	18	1979	1915	3.6	12	8	UNKNOWN	POSSIBLE INSTRUMENT ERROR
150	06	18	1979	2045	3.5	210	8	UNKNOWN	SEE 1915
150	06	19	1979	0727	4.9	3	8	UNKNOWN	SEE 6-18-79 1915
150	06	19	1979	1100	3.4	15	8	UNKNOWN	SEE 6-18-79 1915
150	06	19	1979	1830	3.5	40	8	UNKNOWN	SEE 6-18-79 1915
150	06	20	1979	0915	9.1	11	2	TREATMENT SYSTEM MALFUNCTION - SHUTDOWN	EQUIPMENT MALFUNCTION
150	06	20	1979	1318	9.1	1	2	TREATMENT SYSTEM MALFUNCTION - SHUTDOWN	SEE 0915
150	06	21	1979	1112	9.1	1	2	TREATMENT SYSTEM MALFUNCTION - SHUTDOWN	TREATMENT SYSTEM OVERLOAD, RETENTION TANK FULL
150	06	21	1979	1545	9.1	4	2	TREATMENT SYSTEM MALFUNCTION - SHUTDOWN	SEE 1112
150	06	26	1979	1240	9.1	3	8	UNKNOWN	

PLANT	MO.	DAY	YEAR	TIME.	PH...	MIN..	CODE	REASON.....	EXPLANATION.....
491	06	28	1978	0640	4.6	15	3	INSTRUMENT ERROR	
491	06	28	1978	1735	9.8	45	7	OTHER	SAMPLE PUMP MALFUNCTION
491	06	29	1978	0700	5.6	45	3	INSTRUMENT ERROR	CELL MALFUNCTION
491	07	5	1978	1850	3.0	60	10	SPILLS OR LEAKS	COOLER LEAK
491	07	5	1978	1950	10.0	60	10	SPILLS OR LEAKS	STARTING AT 1850 2 HRS. OF EXCURSIONS RESULTED FROM COOLER LEAK RANGING FROM 3 TO 10; THEREFORE TIME WAS DIVIDED EQUALLY BETWEEN THE TWO PEAKS.
491	07	10	1978	2200	5.2	60	3	INSTRUMENT ERROR	
491	07	15	1978	2030	10.0	30	3	INSTRUMENT ERROR	NOTE: INSTRUMENT MALFUNCTION FOR APPROXIMATELY ONE AND A HALF DAYS DUE TO A DIRTY CELL. INSTRUMENT WAS REPAIRED 7-17-78 ABOUT 9:00 AM.
491	07	15	1978	2325	10.0	15	3	INSTRUMENT ERROR	
491	07	16	1978	0215	10.0	10	3	INSTRUMENT ERROR	
491	07	16	1978	0250	10.0	5	3	INSTRUMENT ERROR	
491	07	16	1978	0645	4.9	23	3	INSTRUMENT ERROR	AGAIN MANY FLUCTUATIONS IN A SHORT TIME RANGING FROM 4.9 TO 10; THEREFORE TIME IS DIVIDED BETWEEN PEAKS.
491	07	16	1978	0708	10.0	22	3	INSTRUMENT ERROR	SEE 0645 SAME DATE
491	07	20	1978	0930	1.8	10	7	OTHER	PUMP TO MONITOR BROKE NOT ALLOWING ANY ACTUAL READING
491	07	20	1978	1645	0.5	45	10	SPILLS OR LEAKS	COOLER LEAK
491	07	22	1978	1930	10.0	10	3	INSTRUMENT ERROR	
491	08	4	1978	2325	5.7	5	8	UNKNOWN	POSSIBLY DIRTY CELL
491	08	4	1978	2345	5.7	5	4	INSTRUMENT CALIBRATION	
491	08	8	1978	0720	10.0	5	7	OTHER	NO WATER TO PROBE
491	08	25	1978	0230	10.0	30	3	INSTRUMENT ERROR	
491	09	4	1978	1550	5.4	15	4	INSTRUMENT CALIBRATION	CHECKING ALARM
491	09	14	1978	0720	5.9	2	8	UNKNOWN	
491	09	18	1978	0700	5.9	2	4	INSTRUMENT CALIBRATION	
491	09	21	1978	1330	5.9	2	3	INSTRUMENT ERROR	
491	09	21	1978	1630	5.5	2	3	INSTRUMENT ERROR	
491	09	21	1978	1830	5.4	2	3	INSTRUMENT ERROR	
491	09	22	1978	2330	4.5	10	4	INSTRUMENT CALIBRATION	CLEANING CELL

PLANT	MO.	DAY	YEAR	TIME.	PH...	MIN..	CODE	REASON.....	EXPLANATION.....
491	09	24	1978	1945	10.0	2	4	INSTRUMENT CALIBRATION	CALIBRATION
491	09	25	1978	1950	4.4	2	3	INSTRUMENT ERROR	
491	09	25	1978	2000	4.8	2	3	INSTRUMENT ERROR	
491	09	25	1978	2015	2.5	2	3	INSTRUMENT ERROR	
491	09	25	1978	2020	5.5	2	3	INSTRUMENT ERROR	
491	09	25	1978	2120	5.3	10	3	INSTRUMENT ERROR	
491	09	28	1978	0710	5.4	2	4	INSTRUMENT CALIBRATION	
491	09	28	1978	0730	5.0	2	4	INSTRUMENT CALIBRATION	
491	09	28	1978	0950	4.1	2	3	INSTRUMENT ERROR	
491	09	29	1978	0910	5.0	2	7	OTHER	SAMPLE BEING TAKEN
491	10	2	1978	0745	0.1	2	3	INSTRUMENT ERROR	
491	10	2	1978	0750	3.6	2	3	INSTRUMENT ERROR	
491	10	2	1978	1610	4.3	2	3	INSTRUMENT ERROR	
491	10	3	1978	0900	0.1	2	7	OTHER	SAMPLES BEING TAKEN
491	10	3	1978	0910	1.4	2	7	OTHER	SAMPLES
491	10	3	1978	1500	3.4	2	7	OTHER	SAMPLES BEING TAKEN
491	10	3	1978	2100	3.6	2	7	OTHER	SAMPLES
491	10	3	1978	2200	5.5	2	3	INSTRUMENT ERROR	
491	10	4	1978	0020	4.9	2	4	INSTRUMENT CALIBRATION	CLEANING CELL
491	10	4	1978	0025	5.3	2	4	INSTRUMENT CALIBRATION	
491	10	4	1978	0330	9.2	4	4	INSTRUMENT CALIBRATION	
491	10	4	1978	0415	9.1	2	3	INSTRUMENT ERROR	
491	10	4	1978	0420	5.9	2	3	INSTRUMENT ERROR	
491	10	4	1978	0630	5.5	2	3	INSTRUMENT ERROR	
491	10	4	1978	0730	2.7	2	3	INSTRUMENT ERROR	
491	10	7	1978	1945	1.0	5	3	INSTRUMENT ERROR	
491	10	7	1978	1950	3.0	5	3	INSTRUMENT ERROR	
491	10	7	1978	2045	4.8	20	3	INSTRUMENT ERROR	
491	10	7	1978	2200	3.7	20	3	INSTRUMENT ERROR	
491	10	7	1978	2230	2.4	10	3	INSTRUMENT ERROR	
491	10	7	1978	2245	4.5	2	3	INSTRUMENT ERROR	
491	10	7	1978	2300	2.0	2	3	INSTRUMENT ERROR	
491	10	7	1978	2310	4.3	2	3	INSTRUMENT ERROR	
491	10	8	1978	0100	5.0	18	3	INSTRUMENT ERROR	NOTE: BETWEEN 1AM AND 7AM NUMEROUS SHIFTS ACROSS PH RANGE OCCURRED; THEREFORE TOTAL TIMES AT APPROX. PHS WERE RECORDED.
491	10	8	1978	0100	4.8	4	3	INSTRUMENT ERROR	
491	10	8	1978	0100	4.4	2	3	INSTRUMENT ERROR	
491	10	8	1978	0100	4.2	4	3	INSTRUMENT ERROR	
491	10	8	1978	0100	3.4	2	3	INSTRUMENT ERROR	
491	10	8	1978	0100	5.5	80	3	INSTRUMENT ERROR	
491	10	10	1978	0845	1.0	20	3	INSTRUMENT ERROR	

PLANT	MO.	DAY	YEAR	TIME.	PH...	MIN..	CODE	REASON.....	EXPLANATION.....
491	10	10	1978	0910	5.4	20	3	INSTRUMENT ERROR	
491	10	10	1978	2320	4.3	2	3	INSTRUMENT ERROR	
491	10	11	1978	1100	4.8	10	10	SPILLS OR LEAKS	ACID LEAK
491	10	11	1978	1110	10.0	20	2	TREATMENT SYSTEM MALFUNCTION - SHUTDOWN	OVERCORRECTION
491	10	18	1978	0115	4.4	4	7	OTHER	NO WATER TO PROBE
491	10	18	1978	0350	5.5	5	7	OTHER	SEE 0115 SAME DATE
491	10	18	1978	0445	0.0	45	7	OTHER	SEE 0115 SAME DATE
491	10	26	1978	1215	5.0	5	3	INSTRUMENT ERROR	
491	11	14	1978	2340	4.3	20	7	OTHER	SAMPLING
491	12	1	1978	1945	3.2	2	3	INSTRUMENT ERROR	
491	12	2	1978	0515	5.1	2	3	INSTRUMENT ERROR	
491	12	5	1978	0940	5.6	180	2	TREATMENT SYSTEM MALFUNCTION - SHUTDOWN	PUMPING PITS
491	12	5	1978	1250	4.9	2	4	INSTRUMENT CALIBRATION	CLEANING INSTRUMENT
491	12	5	1978	1310	3.9	2	4	INSTRUMENT CALIBRATION	
491	12	5	1978	1312	9.6	2	4	INSTRUMENT CALIBRATION	
491	12	6	1978	0945	5.0	2	4	INSTRUMENT CALIBRATION	CLEANING PH PUMP
491	12	6	1978	0950	5.0	2	4	INSTRUMENT CALIBRATION	
491	12	9	1978	0800	1.0	960	7	OTHER	NO FLOW OVER PUMPS DUE TO MUDDY RIVER WATER ACCOUNTED FOR EXCURSIONS THROUGH 12-11
491	12	10	1978	1120	3.4	60	7	OTHER	SEE 12-9
491	12	10	1978	1245	1.0	1200	7	OTHER	SEE 12-9
491	12	11	1978	0830	4.3	20	7	OTHER	PROBLEMS WITH MEASURING CELL DUE TO HIGH MUDDY RIVER WATER ACCOUNTED FOR ALL EXCURSIONS ON 12-11.
491	12	11	1978	0850	10.0	5	7	OTHER	SEE 0830 SAME DATE
491	12	11	1978	0935	5.5	5	7	OTHER	
491	12	11	1978	0945	10.0	5	7	OTHER	
491	12	11	1978	0950	5.6	5	7	OTHER	
491	12	11	1978	1110	9.1	1	7	OTHER	
491	12	11	1978	1135	4.6	5	7	OTHER	
491	12	11	1978	1142	4.7	5	7	OTHER	
491	12	11	1978	1200	4.8	10	7	OTHER	
491	12	11	1978	1215	5.6	5	7	OTHER	
491	12	11	1978	1230	5.9	5	7	OTHER	
491	12	11	1978	1250	9.7	30	7	OTHER	
491	12	11	1978	1340	4.6	5	7	OTHER	
491	12	11	1978	1420	4.6	10	7	OTHER	
491	12	11	1978	2031	3.6	1	7	OTHER	
491	12	11	1978	2033	0.3	3	7	OTHER	

PLANT	MO.	DAY	YEAR	TIME.	PH...	MIN..	CODE	REASON.....	EXPLANATION.....
491	12	11	1978	2040	2.8	5	7	OTHER	
491	12	11	1978	2047	4.0	5	7	OTHER	SEE 0830 SAME DATE
491	01	13	1979	1500	2.4	10	4	INSTRUMENT CALIBRATION	INSTRUMENT REPAIR
491	01	14	1979	1800	5.4	5	4	INSTRUMENT CALIBRATION	
491	01	18	1979	1340	4.6	5	4	INSTRUMENT CALIBRATION	CLEANING CELL
491	01	19	1979	1740	0.0	30	7	OTHER	WATER NOT BEING DELIVERED TO CELL
491	01	21	1979	0700	3.8	2	4	INSTRUMENT CALIBRATION	
491	01	21	1979	1420	4.8	10	2	TREATMENT SYSTEM MALFUNCTION - SHUTDOWN	PUMPING PITS
491	01	21	1979	1450	5.2	20	2	TREATMENT SYSTEM MALFUNCTION - SHUTDOWN	SEE 1420 SAME DATE
491	01	21	1979	2000	9.8	20	2	TREATMENT SYSTEM MALFUNCTION - SHUTDOWN	SEE 1420
491	01	28	1979	0425	3.5	10	10	SPILLS OR LEAKS	GASKET LEAK IN COOLERS
491	01	28	1979	0445	4.8	5	10	SPILLS OR LEAKS	SEE 0425 SAME DATE
491	01	29	1979	1645	5.6	5	2	TREATMENT SYSTEM MALFUNCTION - SHUTDOWN	PUMPING PITS
491	01	29	1979	1705	5.7	5	2	TREATMENT SYSTEM MALFUNCTION - SHUTDOWN	PUMPING PITS
491	01	29	1979	1710	9.7	5	2	TREATMENT SYSTEM MALFUNCTION - SHUTDOWN	SEE 1645
491	02	6	1979	0055	5.4	10	10	SPILLS OR LEAKS	ACID VENT OVERFLOW
491	02	26	1979	0945	3.2	25	10	SPILLS OR LEAKS	ACID OVERFLOW
491	02	26	1979	1050	3.4	40	10	SPILLS OR LEAKS	ACID OVERFLOW
491	02	26	1979	1130	1.2	30	10	SPILLS OR LEAKS	ACID OVERFLOW
491	02	26	1979	1220	1.7	10	10	SPILLS OR LEAKS	ACID COOLERS LEAK
491	02	26	1979	1230	10.0	20	2	TREATMENT SYSTEM MALFUNCTION - SHUTDOWN	OVERNEUTRALIZATION
491	02	26	1979	1345	10.0	30	2	TREATMENT SYSTEM MALFUNCTION - SHUTDOWN	OVERNEUTRALIZATION
491	03	4	1979	0930	2.4	5	7	OTHER	NO FLOW OVER CELL
491	03	4	1979	0935	9.8	10	7	OTHER	SAME AS 0930
491	03	5	1979	0715	5.2	5	7	OTHER	SEE 3-4 0930
491	03	7	1979	0945	5.4	2	4	INSTRUMENT CALIBRATION	CELL WAS BEING CLEANED
491	03	7	1979	0947	10.0	2	4	INSTRUMENT CALIBRATION	SAME AS 0945
491	03	8	1979	1225	2.0	15	10	SPILLS OR LEAKS	OVERFLOW OF DRYING ACID PUMP TANK
491	03	12	1979	1015	5.4	5	4	INSTRUMENT CALIBRATION	

PLANT	MO.	DAY	YEAR	TIME.	PH...	MIN..	CODE	REASON.....	EXPLANATION.....
491	03	14	1979	2200	5.7	45	12		RIVER WATER INTAKE HAD HIGH PH DUE TO MINES IN THE AREA
491	03	15	1979	1605	4.5	10	10	SPILLS OR LEAKS	LEAK IN PUMP TANK
491	3	16	1979	0700	10.0	5	2	TREATMENT SYSTEM MALFUNCTION - SHUTDOWN	RIVER WATER PH WAS LESS THAN SIX, OPERATOR OVERTREATED
491	03	16	1979	1740	5.2	5	4	INSTRUMENT CALIBRATION	CLEANING PROBE
491	03	19	1979	1000	10.0	150	3	INSTRUMENT ERROR	
491	03	22	1979	0820	10.0	10	2	TREATMENT SYSTEM MALFUNCTION - SHUTDOWN	OVER-ADDITION OF SODA ASH
491	03	25	1979	1715	5.8	2	4	INSTRUMENT CALIBRATION	
491	04	5	1979	1700	5.8	5	4	INSTRUMENT CALIBRATION	CLEANING CELL
491	04	7	1979	0900	3.4	5	4	INSTRUMENT CALIBRATION	
491	04	25	1979	0712	1.6	15	10	SPILLS OR LEAKS	A LEAK IN THE PROCESS COOLERS THROUGH 5:00 PM AND ATTEMPTS TO CORRECT LOW PH FROM THIS LEAK ACCOUNTED FOR ALL EXCURSIONS ON 4-25
491	04	25	1979	0730	10.0	35	2	TREATMENT SYSTEM MALFUNCTION - SHUTDOWN	OVERCORRECTION
491	04	25	1979	0830	2.2	10	10	SPILLS OR LEAKS	
491	04	25	1979	0840	9.6	5	2	TREATMENT SYSTEM MALFUNCTION - SHUTDOWN	OVERCORRECTION
491	04	25	1979	0850	10.0	15	2	TREATMENT SYSTEM MALFUNCTION - SHUTDOWN	SEE 0840
491	04	25	1979	0905	2.4	30	10	SPILLS OR LEAKS	
491	04	25	1979	0935	10.0	90	2	TREATMENT SYSTEM MALFUNCTION - SHUTDOWN	
491	04	25	1979	1305	9.8	15	2	TREATMENT SYSTEM MALFUNCTION - SHUTDOWN	
491	04	25	1979	1545	3.0	30	10	SPILLS OR LEAKS	
491	05		1979						NO EXCURSIONS FOR THE MONTH OF MAY 1979
491	06	14	1979	1000	9.2	30	2	TREATMENT SYSTEM MALFUNCTION - SHUTDOWN	PUMPING PITS
491	07	21	1979	2020	3.5	45	10	SPILLS OR LEAKS	COOLER LEAK

PLANT	MO.	DAY	YEAR	TIME.	PH...	MIN..	CODE	REASON.....	EXPLANATION.....
586	08		1978						NO EXCURSIONS FOR THE MONTH OF AUGUST 1978
586	09		1978						NO EXCURSIONS FOR THE MONTH OF SEPTEMBER 1978
586	10		1978						NO EXCURSIONS FOR THE MONTH OF OCTOBER
586	11		1978						NO EXCURSIONS FOR THE MONTH OF NOVEMBER 1978
586	12	7	1978	1215	4.8	1	3	INSTRUMENT ERROR	
586	12	12	1978	1230	3.7	2	3	INSTRUMENT ERROR	
586	01		1979						NO EXCURSIONS FOR THE MONTH OF JANUARY 1979
586	02	14	1979	2150	5.6	1	4	INSTRUMENT CALIBRATION	
586	03	15	1979	2200	5.7	660	8	UNKNOWN	
586	03	18	1979	2100	5.9	240	8	UNKNOWN	
586	04	8	1979	1800	5.9	1230	3	INSTRUMENT ERROR	NOTE: MANUAL READINGS ON LOG SHEETS DID NOT SHOW ANY EXCURSIONS.
586	04	9	1979	1800	5.6	1320	3	INSTRUMENT ERROR	SEE 4-8
586	05	24	1979	1400	9.1	100	4	INSTRUMENT CALIBRATION	
586	06	19	1979	1345	5.2	1200	4	INSTRUMENT CALIBRATION	
586	06	22	1979	0645	10.0	10	4	INSTRUMENT CALIBRATION	REPLACING PEN
586	06	22	1979	0700	0.0	5	4	INSTRUMENT CALIBRATION	
586	06	22	1979	0900	5.6	1440	3	INSTRUMENT ERROR	INSTRUMENT WAS IN NEED OF SERVICE

PLANT	MO.	DAY	YEAR	TIME.	PH...	MIN..	CODE	REASON.....	EXPLANATION.....
664	01	3	1979	1045	9.4	1	4	INSTRUMENT CALIBRATION	
664	01	3	1979	1050	4.4	1	10	SPILLS OR LEAKS	ACID LEAK IN PRODUCTION BEING WORKED ON AND ACID RUN OVER THE MIXING TRAP
664	01	4	1979	2130	4.2	1	4	INSTRUMENT CALIBRATION	
664	01	4	1979	2145	4.5	1	4	INSTRUMENT CALIBRATION	
664	01	4	1979	2150	4.7	8	4	INSTRUMENT CALIBRATION	
664	01	4	1979	2230	5.8	1	4	INSTRUMENT CALIBRATION	
664	01	8	1979	1135	9.5	5	2	TREATMENT SYSTEM MALFUNCTION - SHUTDOWN	TESTING BICARBONATE SYSTEM
664	01	10	1979	2250	3.7	1	4	INSTRUMENT CALIBRATION	
664	01	11	1979	1050	9.1	1	2	TREATMENT SYSTEM MALFUNCTION - SHUTDOWN	TESTING SYSTEM
664	01	11	1979	1120	9.1	1	2	TREATMENT SYSTEM MALFUNCTION - SHUTDOWN	TESTING SYSTEM
664	01	11	1979	1345	9.6	2	2	TREATMENT SYSTEM MALFUNCTION - SHUTDOWN	TESTING SYSTEM
664	01	12	1979	0910	9.4	5	4	INSTRUMENT CALIBRATION	TESTING RECORDING PEN
664	01	15	1979	1245	9.5	1	4	INSTRUMENT CALIBRATION	
664	01	19	1979	1830	4.3	2	3	INSTRUMENT ERROR	
664	01	19	1979	1840	4.0	2	3	INSTRUMENT ERROR	
664	01	19	1979	1900	2.6	5	3	INSTRUMENT ERROR	
664	01	19	1979	1905	1.9	10	3	INSTRUMENT ERROR	
664	01	19	1979	1935	2.5	3	3	INSTRUMENT ERROR	
664	01	19	1979	1945	9.2	1	3	INSTRUMENT ERROR	
664	01	19	1979	1950	13.4	1	3	INSTRUMENT ERROR	
664	01	19	1979	2000	14.0	1	3	INSTRUMENT ERROR	
664	01	19	1979	2045	14.0	25	10	SPILLS OR LEAKS	RIVER WATER SCREEN TO DRYING TOWER COOLER WAS BEING FLUSHED OUT OF EXISTING ACID, AND WATER WENT TO PVC SEWER. BICARBONATE WAS ADDED AND SEWER FLUSHED
664	01	19	1979	2110	0.0	5	10	SPILLS OR LEAKS	
664	01	19	1979	2115	12.0	10	10	SPILLS OR LEAKS	
664	01	19	1979	2125	0.0	35	10	SPILLS OR LEAKS	
664	01	19	1979	2210	0.0	5	10	SPILLS OR LEAKS	
664	01	19	1979	2215	14.0	1	10	SPILLS OR LEAKS	

PLANT	MO.	DAY	YEAR	TIME.	PH...	MIN..	CODE	REASON.....	EXPLANATION.....
664	01	19	1979	2216	0.0	5	10	SPILLS OR LEAKS	
664	01	19	1979	2221	14.0	1	10	SPILLS OR LEAKS	
664	01	19	1979	2222	0.0	5	10	SPILLS OR LEAKS	
664	01	19	1979	2227	14.0	1	10	SPILLS OR LEAKS	
664	01	19	1979	2245	0.0	10	10	SPILLS OR LEAKS	
664	01	19	1979	2300	13.0	20	10	SPILLS OR LEAKS	
664	01	19	1979	2320	0.0	5	10	SPILLS OR LEAKS	
664	01	19	1979	2325	14.0	10	10	SPILLS OR LEAKS	
664	01	20	1979	0005	0.0	90	10	SPILLS OR LEAKS	
664	02	5	1979	1640	9.1	2	8	UNKNOWN	POSSIBLE INSTRUMENT DRIFT
664	02	27	1979	1225	9.2	1	4	INSTRUMENT CALIBRATION	INSTALLING AND CALIBRATING PH RECORDER
664	02	27	1979	1235	12.7	1	4	INSTRUMENT CALIBRATION	INSTALLING AND CALIBRATING PH RECORDER
664	02	27	1979	1240	10.2	2	4	INSTRUMENT CALIBRATION	INSTALLING AND CALIBRATING PH RECORDER
664	02	27	1979	1245	10.1	2	4	INSTRUMENT CALIBRATION	INSTALLING AND CALIBRATING PH RECORDER
664	03	1	1979	1030	9.5	2	3	INSTRUMENT ERROR	
664	03	1	1979	1915	9.4	5	3	INSTRUMENT ERROR	
664	03	28	1979	1135	0.0	5	7	OTHER	POWER OFF
664	03	29	1979	1400	4.5	2	4	INSTRUMENT CALIBRATION	
664	05	9	1979	1210	4.3	2	10	SPILLS OR LEAKS	WASHING OUT TAIL TOWER AND FLUSH WATER OVERFLOWED CURB AND ENTERED STORM SEWER(HF AREA)
664	05	27	1979	1400	10.5	10	10	SPILLS OR LEAKS	CAUSTIC SPILL IN BLOWER BUILDING WHILE CHARGING BOILERS AND 1 QUART ENTERED DRAIN
664	05	31	1979	2300	9.2	1	4	INSTRUMENT CALIBRATION	
664	06	11	1979	0930	0.0	270	3	INSTRUMENT ERROR	INSTRUMENT WAS DOWN
664	07	15	1979	0705	5.1	10	2	TREATMENT SYSTEM MALFUNCTION - SHUTDOWN	BICARBONATE TANK WAS EMPTY THEREFORE BICARBONATE WAS ADDED BY HAND
664	07	15	1979	0750	5.2	3	2	TREATMENT SYSTEM MALFUNCTION - SHUTDOWN	BICARBONATE TANK WAS EMPTY THEREFORE BICARBONATE WAS ADDED BY HAND
664	07	15	1979	0800	5.8	1	2	TREATMENT SYSTEM MALFUNCTION - SHUTDOWN	BICARBONATE TANK WAS EMPTY; THEREFORE BICARBONATE WAS ADDED BY HAND.

PLANT	MO.	DAY	YEAR	TIME.	PH...	MIN..	CODE	REASON.....	EXPLANATION.....
782	08	13	1978	1500	0.0	1260	7	OTHER	PROBE OUT DUE TO RAIN
782	08	21	1978	1100	5.6	15	11		RAINFALL CAUSED ACIDIC NORTH SURFACE DRAIN TO OVERFLOW ACCOUNTING FOR ALL EXCURSIONS ON 8/21/79
782	08	21	1978	1500	5.8	25	11		SEE 1100 SAME DATE
782	08	21	1978	1815	5.5	95	11		SEE 1100 SAME DATE
782	08	30	1978	1230	10.0	510	3	INSTRUMENT ERROR	
782	09	4	1978	2015	3.1	75	12		WASH DOWN ACID VESSELS FLOW INTO NORTH SURFACE DRAIN
782	09	10	1978	2050	5.5	10	3	INSTRUMENT ERROR	
782	09	11	1978	0800	2.7	15	11		RAINFALL RUNOFF
782	09	11	1978	0910	9.2	15	2	TREATMENT SYSTEM MALFUNCTION - SHUTDOWN	OVERCOMPENSATION FOR 0800
782	09	22	1978	0810	2.3	5	8	UNKNOWN	POSSIBLE INSTRUMENT ERROR
782	10	12	1978	1345	9.6	90	2	TREATMENT SYSTEM MALFUNCTION - SHUTDOWN	
782	10	30	1978	1045	10.0	780	7	OTHER	FLOW TO METER OFF
782	10	31	1978	1900	5.7	35	7	OTHER	FLOW TO METER OFF
782	11	15	1978	0120	3.0	2	3	INSTRUMENT ERROR	
782	12	14	1978	1900	5.9	15	10	SPILLS OR LEAKS	PROCESS WATER OVERFLOW TO NORTH SURFACE SEWER
							11		
782	12	20	1978	1015	2.8	5	8	UNKNOWN	EXTREME SWEEPS IN PEAKS MAY INDICATE POWER SURGE (INCLUDES ALL EXCURSIONS ON 12-20).
782	12	20	1978	1020	10.0	5	8	UNKNOWN	
782	12	20	1978	1025	3.2	2	8	UNKNOWN	
782	12	20	1978	1040	10.0	2	8	UNKNOWN	
782	01	17	1979	1810	4.7	5	11		RAINFALL OVERFLOW INTO NORTH SURFACE DRAIN
782	01	26	1979	2145	2.3	2	4	INSTRUMENT CALIBRATION	
782	01	26	1979	2150	9.8	15	4	INSTRUMENT CALIBRATION	
782	01	26	1979	2225	3.8	5	4	INSTRUMENT CALIBRATION	
782	01	27	1979	1510	5.2	130	2	TREATMENT SYSTEM MALFUNCTION - SHUTDOWN	FLOCCULATOR CAUSTIC ADDITION PUMP FAILED

PLANT	MO.	DAY	YEAR	TIME.	PH...	MIN..	CODE	REASON.....	EXPLANATION.....
782	02	4	1979	2210	1.9	150	10	SPILLS OR LEAKS	PROCESS LEAK TO SURFACE SEWER COMBINED WITH HEAVY RAINFALL SEWER OVERFLOW
							11		
782	02	5	1979	0830	9.4	40	3	INSTRUMENT ERROR	
782	02	5	1979	2350	3.4	15	11		NORTH SURFACE DRAIN OVERFLOW TO OUTFALL
782	03	3	1979	0830	5.8	15	8	UNKNOWN	
782	03	15	1979	0630	0.0	990	2	TREATMENT SYSTEM MALFUNCTION - SHUTDOWN	NO FLOW TO INSTRUMENT DUE TO TREATMENT SYSTEM SHUTDOWN
782	03	17	1979	0100	9.9	270	2	TREATMENT SYSTEM MALFUNCTION - SHUTDOWN	
782	03	17	1979	0915	4.8	165	2	TREATMENT SYSTEM MALFUNCTION - SHUTDOWN	SURFACE WATER POND PH CONTROL NOT WORKING
782	03	17	1979	1330	9.2	20	2	TREATMENT SYSTEM MALFUNCTION - SHUTDOWN	SAME AS 0915
782	03	19	1979	1545	2.4	120	11		NORTH SURFACE DRAIN OVERFLOW TO OUTFALL AS A RESULT OF 4.5" OF RAIN
782	03	19	1979	1850	3.7	25	11		SEE 1545 SAME DATE
782	03	20	1979	0245	10.0	80	2	TREATMENT SYSTEM MALFUNCTION - SHUTDOWN	SURFACE POND PH CONTROL NOT WORKING
782	03	20	1979	1230	0.0	90	4	INSTRUMENT CALIBRATION	
782	03	21	1979	1830	5.4	120	10	SPILLS OR LEAKS	NORTH SURFACE LINE BEING REPAIRED. SIMULTANEOUSLY LEAK IN AN ACID LINE INTO NSD CAUSED EXCURSIONS, THIS WAS COMPOUNDED BY HEAVY RAIN.
							2	TREATMENT SYSTEM MALFUNCTION - SHUTDOWN	
							11		
782	03	22	1979	1615	0.1	10	4	INSTRUMENT CALIBRATION	
782	03	22	1979	2015	2.8	40	10	SPILLS OR LEAKS	SEE 3-21
							2	TREATMENT SYSTEM MALFUNCTION - SHUTDOWN	
							11		

PLANT	MO.	DAY	YEAR	TIME.	PH...	MIN..	CODE	REASON.....	EXPLANATION.....
782	03	22	1979	2130	3.0	30	10 2 11	SPILLS OR LEAKS TREATMENT SYSTEM MALFUNCTION - SHUTDOWN	SEE 3-21
782	03	22	1979	2230	2.7	75	10 2 11	SPILLS OR LEAKS TREATMENT SYSTEM MALFUNCTION - SHUTDOWN	SEE 3-21
782	03	23	1979	0020	2.8	110	10 2 11	SPILLS OR LEAKS TREATMENT SYSTEM MALFUNCTION - SHUTDOWN	SEE 3-21
782	04	18	1979	1610	2.4	5	7	OTHER	HEAVY RAINS SWEPT AWAY PH PROBE.
782	04	18	1979	1615	0.0	540	7	OTHER	SEE 1610
782	04	20	1979	1600	9.1	70	2	TREATMENT SYSTEM MALFUNCTION - SHUTDOWN	PH ADJUSTMENT SYSTEM BREAKDOWN IN SURFACE POND DUE TO HEAVY RAINFALL OVER PUMP MOTOR CAUSING A SHORT CIRCUIT
782	04	20	1979	1850	10.0	75	2	TREATMENT SYSTEM MALFUNCTION - SHUTDOWN	SEE 1600 SAME DATE
782	05	2	1979	0620	10.0	125	9	EMERGENCY OPERATION	PLANT SHUTDOWN AS A RESULT OF A PLANT WIDE POWER FAILURE THERFORE NO PH ADJUSTMENT WAS POSSIBLE
782	05	8	1979	1830	4.8	75	7	OTHER	
782	05	29	1979	1030	9.1	5	8	UNKNOWN	
782	06	2	1979	1540	3.8	95	11		NORTH SURFACE DRAIN OVERFLOW DUE TO RAIN
782	06	2	1979	1735	10.0	75	2	TREATMENT SYSTEM MALFUNCTION - SHUTDOWN	OVERCOMPENSATION BY OPERATOR
782	07	22	1979	1550	9.6	180	3	INSTRUMENT ERROR	
782	07	25	1979	1315	9.5	120	7	OTHER	RAIN FROM A TROPICAL STORM
782	07	27	1979	0815	5.1	205	9 11	EMERGENCY OPERATION	SPILL IN SULFURIC PLANT NORMALLY ADJUSTED IN SURFACE POND, HOWEVER POND WAS OVERFLOWING DUE TO 15" OF RAIN FROM A TROPICAL STORM
782	07	30	1979	1145	5.4	15	11		ACID LEFT IN LIME-STONE BED OVERFLOW OF NORTH SURFACE DRAIN TO OUTFALL, WAS WASHED DOWN BY RAIN.

PLANT	MO.	DAY	YEAR	TIME.	PH...	MIN..	CODE	REASON.....	EXPLANATION.....
786	10	25	1978	0030	5.7	1800	6	DIVERSION IN OPERATION BUT PH STILL RECORDING	POND GATE WAS CLOSED AT THE ONSET OF PH EXCURSION
786	11	10	1978	1415	9.2	5	12		POURING CONCRETE DURING THE PIPE AND SUMP LAYOUT
786	11	10	1978	1420	9.2	2	12		POURING CONCRETE DURING PIPE AND SUMP LAYOUT
786	11	23	1978	1930	5.9	60	2	TREATMENT SYSTEM MALFUNCTION - SHUTDOWN	EFFLUENT SYSTEM WAS SHUT DOWN. THERE WAS NO INDICATION IN THE LOG BOOKS OF POND BEING BLOCKED
786	11	23	1978	2050	5.7	210	2	TREATMENT SYSTEM MALFUNCTION - SHUTDOWN	EFFLUENT SYSTEM WAS SHUT DOWN. THERE WAS NO INDICATION IN THE LOG BOOKS OF POND BEING BLOCKED
786	12	16	1978	0945	5.9	75	9	EMERGENCY OPERATION	POWER FAILURE
786	12	17	1978	1500	4.2	10	4	INSTRUMENT CALIBRATION	INSTRUMENT CALIBRATION
786	12	17	1978	2130	5.8	285	3	INSTRUMENT ERROR	INSTRUMENT ERROR.NO INDICATION OF LOW PH OF THE GRAB SAMPLES IN THE LOG BOOK
786	01	5	1979	0420	5.8	280	6	DIVERSION IN OPERATION BUT PH STILL RECORDING	BLOCKED POND
786	01	18	1979	0315	5.3	10	2	TREATMENT SYSTEM MALFUNCTION - SHUTDOWN	
786	02	6	1979	0300	9.4	15	2	TREATMENT SYSTEM MALFUNCTION - SHUTDOWN	
786	02	6	1979	0315	9.4	1785	6	DIVERSION IN OPERATION BUT PH STILL RECORDING	FLOW STOPPED
786	02	8	1979	0930	9.2	180	6	DIVERSION IN OPERATION BUT PH STILL RECORDING	FLOW STOPPED
786	02	10	1979	1400	10.1	5	4	INSTRUMENT CALIBRATION	PH PROBE WAS CLEANED
786	02	15	1979	1230	3.2	5	4	INSTRUMENT CALIBRATION	CALIBRATION
786	02	23	1979	0645	10.1	2	4	INSTRUMENT CALIBRATION	CALIBRATION
786	03	5	1979	0315	5.7	90	3	INSTRUMENT ERROR	METER ERROR
786	03	10	1979	1200	5.9	60	3	INSTRUMENT ERROR	METER ERROR

PLANT	MO.	DAY	YEAR	TIME.	PH...	MIN..	CODE	REASON.....	EXPLANATION.....
786	04	24	1979	1800	5.3	825	6	DIVERSION IN OPERATION BUT PH STILL RECORDING	GATE CLOSED-OUTFALL WAS CUT-OFF
786	04	26	1979	0405	11.2	5	4	INSTRUMENT CALIBRATION	CALIBRATION
786	04	26	1979	0410	4.8	5	4	INSTRUMENT CALIBRATION	CALIBRATION
786	06	7	1979	2345	5.7	450	6	DIVERSION IN OPERATION BUT PH STILL RECORDING	OUTFALL BLOCKED
786	06	13	1979	1930	5.7	70	3	INSTRUMENT ERROR	INSTRUMENT ERROR
786	06	23	1979	2015	5.8	20	3	INSTRUMENT ERROR	INSTRUMENT ERROR
786	07	15	1979	2330	4.9	465	6	DIVERSION IN OPERATION BUT PH STILL RECORDING	DISCHARGE GATE WAS CLOSED
786	07	17	1979	1600	5.6	2	4	INSTRUMENT CALIBRATION	CLEANED PROBES

PLANT	MO.	DAY	YEAR	TIME.	PH...	MIN..	CODE	REASON..... EXPLANATION.....
928	01	16	1979	1555	9.3	10	6	DIVERSION IN OPERATION BUT PH STILL RECORDING
928	01	16	1979	1605	9.2	5	6	DIVERSION IN OPERATION BUT PH STILL RECORDING
928	01	17	1979	1110	10.0	2	4	INSTRUMENT CALIBRATION
928	01	17	1979	1120	9.4	2	4	INSTRUMENT CALIBRATION
928	01	17	1979	1122	0.0	1	4	INSTRUMENT CALIBRATION
928	01	17	1979	1140	14.0	1	4	INSTRUMENT CALIBRATION
928	01	17	1979	1141	0.0	1	4	INSTRUMENT CALIBRATION
928	01	17	1979	1200	14.0	1	4	INSTRUMENT CALIBRATION
928	01	17	1979	1201	0.0	1	4	INSTRUMENT CALIBRATION
928	01	19	1979	1250	14.0	4	4	INSTRUMENT CALIBRATION
928	01	24	1979	0830	11.0	2	4	INSTRUMENT CALIBRATION
928	02	16	1979	1220	10.5	1	4	INSTRUMENT CALIBRATION
928	02	16	1979	1221	0.0	5	4	INSTRUMENT CALIBRATION
928	02	16	1979	1315	0.0	1	4	INSTRUMENT CALIBRATION
928	02	20	1979	1300	14.0	4	4	INSTRUMENT CALIBRATION
928	02	20	1979	1320	14.0	1	4	INSTRUMENT CALIBRATION
928	02	21	1979	1310	13.2	2	7	OTHER
928	02	24	1979	0140	14.0	1	4	INSTRUMENT CALIBRATION
928	02	24	1979	0141	0.0	1	4	INSTRUMENT CALIBRATION
928	02	24	1979	0200	1.8	1	4	INSTRUMENT CALIBRATION
928	02	26	1979	2120	14.0	2	4	INSTRUMENT CALIBRATION
928	02	26	1979	2122	0.0	2	4	INSTRUMENT CALIBRATION
928	02	26	1979	2315	14.0	5	4	INSTRUMENT CALIBRATION
928	02	26	1979	2320	0.0	5	4	INSTRUMENT CALIBRATION
928	03	1	1979	0940	14.0	10	4	INSTRUMENT CALIBRATION
928	03	1	1979	1500	2.8	1	4	INSTRUMENT CALIBRATION
928	03	2	1979	0830	14.0	2	4	INSTRUMENT CALIBRATION

PLANT	MO.	DAY	YEAR	TIME.	PH...	MIN..	CODE	REASON.....	EXPLANATION.....
928	03	2	1979	0832	0.0	2	4	INSTRUMENT CALIBRATION	
928	03	2	1979	1315	14.0	5	4	INSTRUMENT CALIBRATION	
928	03	2	1979	1320	0.0	5	4	INSTRUMENT CALIBRATION	
928	03	9	1979	1320	14.0	15	4	INSTRUMENT CALIBRATION	
928	03	9	1979	1440	14.0	1	4	INSTRUMENT CALIBRATION	
928	03	9	1979	1455	12.5	1	4	INSTRUMENT CALIBRATION	
928	03	10	1979	0930	4.9	14	6	DIVERSION IN OPERATION BUT PH STILL RECORDING	NO FLOW
928	03	11	1979	0415	4.3	1	4/6		PH METER WAS INCORRECT AND FLOW WAS STOPPED
928	03	11	1979	0440	0.0	25	4/6		SEE 0415 SAME DATE
928	03	11	1979	0820	13.8	10	4/6		SEE 0415 SAME DATE
928	03	11	1979	0900	5.6	20	4/6		SEE 0415 SAME DATE
928	03	11	1979	1010	0.0	20	4/6		SEE 0415 SAME DATE
928	03	11	1979	1200	5.6	840	4/6		SEE 0415 SAME DATE
928	03	21	1979	1345	13.0	2	7	OTHER	
928	03	21	1979	2015	4.9	2	4	INSTRUMENT CALIBRATION	
928	03	22	1979	1415	3.0	5	6	DIVERSION IN OPERATION BUT PH STILL RECORDING	NO FLOW
928	03	23	1979	2250	0.0	15	6	DIVERSION IN OPERATION BUT PH STILL RECORDING	NO FLOW
928	04	24	1979	0940	0.0	1	4	INSTRUMENT CALIBRATION	
928	04	29	1979	0920	4.8	1	4	INSTRUMENT CALIBRATION	
928	05	1	1979	1250	12.5	1	4	INSTRUMENT CALIBRATION	
928	05	1	1979	1251	0.0	10	4	INSTRUMENT CALIBRATION	
928	05	1	1979	1330	0.5	1	4	INSTRUMENT CALIBRATION	
928	05	4	1979	0920	0.0	15	4	INSTRUMENT CALIBRATION	
928	05	10	1979	0805	5.6	2	4	INSTRUMENT CALIBRATION	
928	05	10	1979	0807	10.2	2	4	INSTRUMENT CALIBRATION	
928	05	17	1979	0520	13.8	160	3	INSTRUMENT ERROR	FAULTY PROBE
928	05	18	1979	0810	13.8	280	3	INSTRUMENT ERROR	
928	05	18	1979	1250	0.0	10	4	INSTRUMENT CALIBRATION	
928	05	20	1979	1100	13.1	1	6	DIVERSION IN OPERATION BUT PH STILL RECORDING	

PLANT	MO.	DAY	YEAR	TIME.	PH...	MIN..	CODE	REASON.....	EXPLANATION.....
928	05	20	1979	1101	0.0	10	6	DIVERSION IN OPERATION BUT PH STILL RECORDING	NO FLOW
928	05	20	1979	1111	13.8	2	6	DIVERSION IN OPERATION BUT PH STILL RECORDING	
928	05	23	1979	0800	0.0	2	4	INSTRUMENT CALIBRATION	
928	05	23	1979	0802	13.5	2	4	INSTRUMENT CALIBRATION	
928	06	1	1979	1315	0.5	2	4	INSTRUMENT CALIBRATION	
928	06	1	1979	1320	2.0	1	4	INSTRUMENT CALIBRATION	
928	06	8	1979	0845	0.0	5	4	INSTRUMENT CALIBRATION	
928	06	10	1979	1650	4.0	2	3	INSTRUMENT ERROR	
928	06	12	1979	0050	0.0	165	3	INSTRUMENT ERROR	
928	06	12	1979	1350	0.0	5	3	INSTRUMENT ERROR	
928	06	12	1979	1425	0.0	5	3	INSTRUMENT ERROR	
928	06	12	1979	1445	2.8	5	3	INSTRUMENT ERROR	
928	06	13	1979	0410	1.0	240	3	INSTRUMENT ERROR	
928	06	13	1979	1045	0.0	240	3	INSTRUMENT ERROR	
928	06	14	1979	0540	1.8	2	3	INSTRUMENT ERROR	
928	06	14	1979	0805	0.0	1	3	INSTRUMENT ERROR	
928	06	14	1979	0820	0.0	1	3	INSTRUMENT ERROR	
928	06	14	1979	0825	0.0	1	3	INSTRUMENT ERROR	
928	06	14	1979	0905	0.0	1	3	INSTRUMENT ERROR	
928	06	15	1979	0840	11.2	1	4	INSTRUMENT CALIBRATION	
928	06	15	1979	0850	9.2	1	4	INSTRUMENT CALIBRATION	
928	06	15	1979	0905	12.5	1	4	INSTRUMENT CALIBRATION	
928	06	15	1979	1320	0.0	5	4	INSTRUMENT CALIBRATION	
928	06	15	1979	2145	3.7	675	6	DIVERSION IN OPERATION BUT PH STILL RECORDING	TREATMENT SYSTEM WAS SHUT DOWN AND FLOW WAS DIVERTED
928	06	16	1979	1145	3.7	625	6	DIVERSION IN OPERATION BUT PH STILL RECORDING	TREATMENT SYSTEM WAS SHUT DOWN AND FLOW WAS DIVERTED
928	06	26	1979	1030	13.0	8	4	INSTRUMENT CALIBRATION	
928	06	26	1979	1100	4.0	1	4	INSTRUMENT CALIBRATION	
928	06	26	1979	1130	3.6	1	4	INSTRUMENT CALIBRATION	
928	06	26	1979	1315	13.0	2	4	INSTRUMENT CALIBRATION	
928	06	26	1979	1335	11.8	1	4	INSTRUMENT CALIBRATION	
928	06	26	1979	1410	12.6	1	4	INSTRUMENT CALIBRATION	
928	06	29	1979	0635	4.0	10	4	INSTRUMENT CALIBRATION	

PLANT	MO.	DAY	YEAR	TIME.	PH...	MIN..	CODE	REASON.....	EXPLANATION.....
928	07	3	1979	0545	13.4	1	4	INSTRUMENT CALIBRATION	
928	07	3	1979	0546	3.4	1	4	INSTRUMENT CALIBRATION	
928	07	3	1979	0605	3.8	1	4	INSTRUMENT CALIBRATION	
928	07	3	1979	0606	13.2	1	4	INSTRUMENT CALIBRATION	
928	07	3	1979	0647	12.4	1	4	INSTRUMENT CALIBRATION	
928	07	3	1979	0648	4.0	1	4	INSTRUMENT CALIBRATION	
928	07	3	1979	0705	1.6	1	4	INSTRUMENT CALIBRATION	
928	07	3	1979	0706	11.0	1	4	INSTRUMENT CALIBRATION	
928	07	3	1979	0750	13.4	10	4	INSTRUMENT CALIBRATION	
928	07	3	1979	0800	4.0	7	4	INSTRUMENT CALIBRATION	
928	07	3	1979	0830	13.4	1	4	INSTRUMENT CALIBRATION	
928	07	3	1979	0831	3.0	1	4	INSTRUMENT CALIBRATION	
928	07	5	1979	0935	0.0	1	4	INSTRUMENT CALIBRATION	
928	07	5	1979	0945	0.0	1	4	NSTRUMENT CALIBRATION	
928	07	5	1979	1020	0.9	1	4	INSTRUMENT CALIBRATION	
928	07	5	1979	1021	11.0	1	4	INSTRUMENT CALIBRATION	
928	07	5	1979	1040	13.8	1	4	INSTRUMENT CALIBRATION	
928	07	5	1979	1059	0.0	1	4	INSTRUMENT CALIBRATION	
928	07	5	1979	1100	13.5	1	4	INSTRUMENT CALIBRATION	
928	07	5	1979	1101	0.0	1	4	INSTRUMENT CALIBRATION	
928	07	11	1979	0945	5.6	75	4	INSTRUMENT CALIBRATION	
928	07	11	1979	1105	0.0	1	4	INSTRUMENT CALIBRATION	
928	07	11	1979	1310	4.0	20	4	INSTRUMENT CALIBRATION	
928	07	13	1979	0635	5.1	10	2	TREATMENT SYSTEM MALFUNCTION - SHUTDOWN	SEE 0655
928	07	13	1979	0655	4.6	5	2	TREATMENT SYSTEM MALFUNCTION - SHUTDOWN	DIVERSION VALVE DID NOT PROPERLY CLOSE
928	07	17	1979	0835	0.0	1	4	INSTRUMENT CALIBRATION	

PLANT	MO.	DAY	YEAR	TIME.	PH...	MIN..	CODE	REASON.....	EXPLANATION.....
928	07	17	1979	0855	0.0	1	4	INSTRUMENT CALIBRATION	
928	07	18	1979	0940	0.0	1	4	INSTRUMENT CALIBRATION	
928	07	18	1979	0950	0.0	1	4	INSTRUMENT CALIBRATION	
928	07	18	1979	1320	0.0	1	4	INSTRUMENT CALIBRATION	
928	07	18	1979	1321	13.0	6	4	INSTRUMENT CALIBRATION	
928	07	20	1979	1300	14.0	2	4	INSTRUMENT CALIBRATION	
928	07	24	1979	1500	0.0	20	6	DIVERSION IN OPERATION BUT PH STILL RECORDING	NO FLOW
928	07	24	1979	1750	0.0	2	6	DIVERSION IN OPERATION BUT PH STILL RECORDING	
928	07	25	1979	0910	0.0	1	4	INSTRUMENT CALIBRATION	
928	07	25	1979	0920	11.6	3	4	INSTRUMENT CALIBRATION	
928	07	26	1979	1345	0.0	6	4	INSTRUMENT CALIBRATION	
928	07	26	1979	1351	13.0	6	4	INSTRUMENT CALIBRATION	
928	07	26	1979	1435	0.9	1	6	DIVERSION IN OPERATION BUT PH STILL RECORDING	
928	07	26	1979	1436	10.5	1	4	INSTRUMENT CALIBRATION	
928	07	26	1979	1515	0.0	1	4	INSTRUMENT CALIBRATION	
928	07	26	1979	1516	14	1	4	INSTRUMENT CALIBRATION	
928	07	26	1979	1545	14	1	4	INSTRUMENT CALIBRATION	
928	07	27	1979	1315	0.0	8	4	INSTRUMENT CALIBRATION	
928	07	27	1979	1323	10.2	7	4	INSTRUMENT CALIBRATION	
928	07	27	1979	1348	0.0	2	4	INSTRUMENT CALIBRATION	
928	07	27	1979	1350	13.8	2	4	INSTRUMENT CALIBRATION	
928	07	31	1979	0800	0.0	30	4	INSTRUMENT CALIBRATION	
928	08	1	1979	1045	0	15	4	INSTRUMENT CALIBRATION	
928	08	1	1979	2200	5.0	25	6	DIVERSION IN OPERATION BUT PH STILL RECORDING	
928	08	2	1979	0805	9.3	5	4	INSTRUMENT CALIBRATION	
928	08	2	1979	0815	9.3	2	4	INSTRUMENT CALIBRATION	

PLANT	MO.	DAY	YEAR	TIME.	PH...	MIN..	CODE	REASCN.....	EXPLANATION.....
928	08	2	1979	0835	13.5	3	4	INSTRUMENT CALIBRATION	
928	08	2	1979	0840	13.0	1	4	INSTRUMENT CALIBRATION	
928	08	2	1979	0841	0.0	10	4	INSTRUMENT CALIBRATION	
928	08	2	1979	1010	13.0	1	4	INSTRUMENT CALIBRATION	
928	08	5	1979	0930	5.5	25	6	DIVERSION IN OPERATION BUT PH STILL RECORDING	NO DISCHARGE. EFFLUENT PUMPS WERE SHUT OFF.
928	08	6	1979	0829	0.5	1	4	INSTRUMENT CALIBRATION	
928	08	6	1979	0830	13.0	15	4	INSTRUMENT CALIBRATION	
928	08	6	1979	1005	11.0	1	4	INSTRUMENT CALIBRATION	
928	08	7	1979	0845	13.0	25	4	INSTRUMENT CALIBRATION	
928	08	7	1979	0940	14.0	2	4	INSTRUMENT CALIBRATION	
928	08	7	1979	0942	0.9	1	4	INSTRUMENT CALIBRATION	
928	08	8	1979	0845	14.0	5	4	INSTRUMENT CALIBRATION	
928	08	8	1979	0925	9.4	1	4	INSTRUMENT CALIBRATION	
928	08	9	1979	0850	14.0	3	4	INSTRUMENT CALIBRATION	
928	08	9	1979	0914	0.0	1	4	INSTRUMENT CALIBRATION	
928	08	9	1979	0940	11.5	5	4	INSTRUMENT CALIBRATION	
928	08	10	1979	1310	12.1	5	4	INSTRUMENT CALIBRATION	
928	08	10	1979	1340	10.3	1	4	INSTRUMENT CALIBRATION	
928	08	14	1979	1240	14.0	5	4	INSTRUMENT CALIBRATION	
928	08	14	1979	1250	14.0	2	4	INSTRUMENT CALIBRATION	
928	08	15	1979	0832	12.8	4	4	INSTRUMENT CALIBRATION	
928	08	15	1979	0836	4.5	1	4	INSTRUMENT CALIBRATION	
928	08	15	1979	0855	11.2	1	4	INSTRUMENT CALIBRATION	
928	08	16	1979	1205	5.3	1	4	INSTRUMENT CALIBRATION	
928	08	16	1979	1206	12.8	15	4	INSTRUMENT CALIBRATION	
928	08	16	1979	1230	4.7	1	4	INSTRUMENT CALIBRATION	
928	08	16	1979	1231	11.9	1	4	INSTRUMENT CALIBRATION	

PLANT	MO.	DAY	YEAR	TIME.	PH...	MIN..	CODE	REASON.....	EXPLANATION.....
928	08	18	1979	0000	5.6	1800	4	INSTRUMENT CALIBRATION	NO FLOW THROUGH PH CELL - REPAIRED AND CLEANED LINE
928	08	21	1979	1045	5.4	10	3	INSTRUMENT ERROR	PH CELL SUCKED DRY BY VACUUM ON LINE
928	08	21	1979	1245	0.0	2	4	INSTRUMENT CALIBRATION	
928	08	21	1979	1247	14.0	2	4	INSTRUMENT CALIBRATION	
928	08	21	1979	1325	2.8	2	4	INSTRUMENT CALIBRATION	
928	08	22	1979	0805	2.3	1	4	INSTRUMENT CALIBRATION	
928	08	22	1979	0806	14.0	5	4	INSTRUMENT CALIBRATION	
928	08	22	1979	1050	13.4	1	3	INSTRUMENT ERROR	PH CELL DRY
928	08	22	1979	1051	5.0	5	3	INSTRUMENT ERROR	
928	08	22	1979	1339	1.0	1	4	INSTRUMENT CALIBRATION	
928	08	22	1979	1340	14.0	2	4	INSTRUMENT CALIBRATION	
928	08	24	1979	0840	0.0	2	4	INSTRUMENT CALIBRATION	PH STANDARDIZATION
928	08	24	1979	0842	14.0	2	4	INSTRUMENT CALIBRATION	PH STANDARDIZATION
928	08	24	1979	0910	0.0	5	4	INSTRUMENT CALIBRATION	PH STANDARDIZATION
928	08	24	1979	0915	14.0	3	4	INSTRUMENT CALIBRATION	PH STANDARDIZATION
928	08	24	1979	1240	4.7	5	3	INSTRUMENT ERROR	PH CELL SUCKED DRY BY VACUUM ON LINE
928	08	24	1979	1340	0.0	30	3	INSTRUMENT ERROR	PH CELL SUCKED DRY BY VACUUM ON LINE
928	08	27	1979	1505	0.0	40	3	INSTRUMENT ERROR	RAIN SHORTING WIRES IN CONDUIT (PH)
928	08	27	1979	1625	4.7	15	3	INSTRUMENT ERROR	RAIN SHORTING WIRES IN CONDUIT (PH)
928	08	28	1979	0850	0.0	5	4	INSTRUMENT CALIBRATION	
928	08	31	1979	0830	0.6	1	4	INSTRUMENT CALIBRATION	
928	08	31	1979	0840	10.8	8	4	INSTRUMENT CALIBRATION	
928	08	31	1979	0920	12.6	1	4	INSTRUMENT CALIBRATION	

*U.S. GOVERNMENT PRINTING OFFICE : 1980 0-311-726/3896