EPA-600/R-96-026
March 1996

EVALUATION OF BARRIERS TO THE USE OF RADIATION-CURED AND HOT MELT COATINGS IN COATED AND LAMINATED SUBSTRATE MANUFACTURING

By:

Jill B. Vitas, Geary D. McMinn, and William L. Blake, Jr.
TRC Environmental Corporation
6340 Quadrangle Drive, Suite 200
Chapel Hill, North Carolina 27514

EPA Contract No. 68-D2-0181
Work Assignment Nos. 1/005 and 1/015

EPA Project Officer: Carlos M. Nunez
Air and Energy Engineering Research Laboratory
Research Triangle Park, North Carolina 27711

Prepared for:

U.S. Environmental Protection Agency
Office of Research and Development
Washington, D.C. 20460

TECHNICAL REPORT DATA
(Please read Instructions on the reverse before complet

1. REPORT NO. EPA-600/R-96-026	2.	3.
4. TITLE AND SUBTITLE Evaluation of Barriers to the Use of Radiation-cured and Hot Melt Coatings in Coated and Laminated Substrate Manufacturing		5. REPORT DATE March 1996
		6. PERFORMING ORGANIZATION CODE
7. AUTHOR(S) Jill B. Vitas, Geary D. McMinn, and William L. Blake, Jr.		8. PERFORMING ORGANIZATION REPORT NO. CH-94-56
9. PERFORMING ORGANIZATION NAME AND ADDRESS TRC Environmental Corporation 100 Europa Drive, Suite 150 Chapel Hill, North Carolina 27514		10. PROGRAM ELEMENT NO.
		11. CONTRACT/GRANT NO. 68-D2-0181, Tasks 1/005 and 1/015
12. SPONSORING AGENCY NAME AND ADDRESS EPA, Office of Research and Development Air and Energy Engineering Research Laboratory* Research Triangle Park, NC 27711		13. TYPE OF REPORT AND PERIOD COVERED Final; 6/93 - 4/94
		14. SPONSORING AGENCY CODE EPA/600/13

15. SUPPLEMENTARY NOTES AEERL project officer is Carlos M. Nunez, Mail Drop 61, 919/541-1756. (*) Now known as the National Risk Management Research Laboratory.

16. ABSTRACT The report gives results of a study to investigate and identify the technical, educational, and economic barriers to the use and implementation of radiation-cured and hot melt coatings in coated and laminated substrate manufacturing. (NOTE: In support of EPA's Source Reduction Review Project (SRRP), maximum achievable control technology (MACT) standards development, and the Pollution Prevention Act, EPA's Air and Energy Engineering Research Laboratory (AEERL) is investigating the current industrial use of and barriers to the extended use of radiation-cured coatings in SRRP and MACT categories.) Important barriers include: capital cost, adhesive cost, lack of data on physical properties of adhesives, and aesthetics of the end product. The report identifies work areas that could help overcome identified technical, educational, and economic barriers. The discussed opportunities include: (1) convening a focus group to discuss identified barriers, identify other barriers, and begin the process to overcome these carriers; (2) investigating the use of radiation-curable systems in Europe; (3) researching the marketing difficulties associated with nonsolvent-based products; and (4) investigating state economic incentive programs to determine if financial assistance can be given to manufacturing facilities to help encourage the testing of radiation-curable adhesives.

17. KEY WORDS AND DOCUMENT ANALYSIS

a. DESCRIPTORS		b. IDENTIFIERS/OPEN ENDED TERMS	c. COSATI Field/Group	
Pollution	Radiation	Pollution Prevention	13B	14G
Substrates	Adhesives	Stationary Sources	11D	11A
Manufacturing		Hot Melt Coatings	05C	
Laminates		Radiation Curing		
Coatings			11C	
Curing			13H	

18. DISTRIBUTION STATEMENT Release to Public	19. SECURITY CLASS (This Report) Unclassified	21. NO. OF PAGES 108
	20. SECURITY CLASS (This page) Unclassified	22. PRICE

EPA Form 2220-1 (9-73)

NOTICE

This document has been reviewed in accordance with U.S. Environmental Protection Agency policy and approved for publication. Mention of trade names or commercial products does not constitute endorsement or recommendation for use.

ABSTRACT

In support of the Source Reduction Review Project (SRRP), maximum achievable control technology (MACT) standards development, and the Pollution Prevention Act, EPA's Air and Energy Engineering Research Laboratory (AEERL) is investigating the current industrial use of and barriers to the extended use of radiation-cured coatings in SRRP and MACT categories. This report presents the results of a study to investigate and identify the technical, educational, and economic barriers to the use and implementation of radiation-cured and hot melt coatings in coated and laminated substrate manufacturing. Some of the important barriers were the following: (1) capital cost; (2) adhesive cost; (3) lack of data on physical properties of adhesives; and (4) aesthetics of the end product. This report identifies work areas that could help overcome the technical, educational, and economic barriers identified. Some of the opportunities discussed include the following: (1) convene a focus group to discuss identified barriers, identify other barriers, and begin the process to overcome these barriers; (2) investigate the use of radiation-curable systems in Europe; (3) research the marketing difficulties associated with non-solvent-based products; (4) investigate state economic incentive programs to determine if financial assistance can be given to manufacturing facilities to help encourage the testing of radiation-curable adhesives; and (5) develop a software system that will provide physical property data and other important information on alternative adhesive formulations to assist facilities in identifying alternatives to their current solvent-based adhesives.

TABLE OF CONTENTS

Chapter **Page**

Abstract . . . iii
List of Figures . . . viii
List of Tables . . . ix
Conversion Factors . . . x
Executive Summary . . . xi

1 INTRODUCTION AND PROJECT BACKGROUND . . . 1-1
1.1 PROJECT BACKGROUND . . . 1-1
1.2 PROJECT OBJECTIVES . . . 1-3
1.3 INDUSTRY SEGMENT DESCRIPTION . . . 1-4
1.4 REPORT ORGANIZATION . . . 1-5
1.5 REFERENCES . . . 1-5

2 CONVENTIONAL PROCESS DESCRIPTION . . . 2-1
2.1 GENERAL . . . 2-1
2.2 MATERIAL INPUTS . . . 2-1
2.2.1 Substrates . . . 2-1
2.2.2 Coatings . . . 2-3
2.3 EQUIPMENT . . . 2-3
2.4 CONVENTIONAL PROCESS DESCRIPTION . . . 2-3
2.4.1 Adhesive Mixing . . . 2-4
2.4.2 Adhesive Tape Manufacturing . . . 2-5
2.5 PRODUCTS . . . 2-9
2.6 EMISSIONS AND WASTE . . . 2-11
2.6.1 Air Emissions . . . 2-11
2.6.2 Liquid Waste Streams . . . 2-12
2.6.3 Solid Waste . . . 2-12
2.7 REFERENCES . . . 2-13

3 DESCRIPTION OF RADIATION-CURING . . . 3-1
3.1 PROCESSES . . . 3-1
3.1.1 Introduction . . . 3-1
3.1.2 Raw Materials . . . 3-1
3.1.3 Equipment . . . 3-2
3.1.4 Physical Processes . . . 3-4
3.1.5 Product Performance . . . 3-7
3.1.6 Emissions and Wastes . . . 3-7
3.2 COSTS . . . 3-9
3.2.1 General . . . 3-9
3.2.2 Materials . . . 3-9
3.2.3 Equipment . . . 3-10

TABLE OF CONTENTS (Continued)

Chapter **Page**

3.2.4 Operating and Maintenance Costs 3-11
3.2.5 Energy 3-13
3.3 REFERENCES 3-13

4 TECHNICAL BARRIERS TO RADIATION-CURING 4-1
4.1 GENERAL 4-1
4.2 EQUIPMENT SUITABILITY 4-1
4.3 MATERIALS AVAILABILITY 4-2
4.4 PRODUCT AND ADHESIVE PERFORMANCE CHARACTERISTICS 4-3
4.5 HEALTH AND SAFETY ISSUES 4-4
4.6 REFERENCES 4-4

5 ECONOMIC BARRIERS TO RADIATION-CURING 5-1
5.1 GENERAL 5-1
5.2 CAPITAL INVESTMENT FOR NEW SYSTEMS 5-1
5.3 PRICING PRESSURE 5-2
5.4 PAYBACK PERIOD FOR RETROFIT SYSTEMS 5-2
5.5 OPERATING COSTS 5-5
5.6 REFERENCES 5-5

6 EDUCATIONAL BARRIERS TO RADIATION CURING 6-1
6.1 GENERAL 6-1
6.2 MANAGEMENT AWARENESS 6-1
6.3 EMPLOYEE TRAINING 6-1

7 DESCRIPTION OF ALTERNATIVE TECHNOLOGIES 7-1
7.1 GENERAL 7-1
7.2 PROCESSES 7-1
7.2.1 Raw Materials 7-1
7.2.2 Equipment 7-3
7.2.3 Physical Process 7-4
7.2.4 Product Outputs 7-5
7.2.5 Emissions and Wastes 7-5
7.3 COSTS 7-6
7.3.1 Materials 7-6
7.3.2 Equipment 7-7
7.3.3 Operating and Maintenance Costs 7-7
7.3.4 Energy 7-10
7.4 TECHNICAL BARRIERS TO ALTERNATIVE TECHNOLOGY 7-12
7.4.1 Equipment Suitability 7-12

TABLE OF CONTENTS (Continued)

Chapter **Page**

7.4.2 Materials Availability 7-12
7.4.3 Product Performance Characteristics 7-12
7.4.4 Process Limitations 7-13
7.4.5 Health and Safety Issues 7-13
7.5 ECONOMIC BARRIERS TO ALTERNATIVE TECHNOLOGY 7-14
7.5.1 Capital Investment 7-14
7.5.2 Pricing and Potential Lost Market Pressure 7-14
7.5.3 Payback Period 7-15
7.6 EDUCATIONAL BARRIERS TO ALTERNATIVE TECHNOLOGY 7-16
7.6.1 Management Awareness 7-16
7.6.2 Employee Training 7-16
7.7 POLLUTION PREVENTION/SOURCE REDUCTION RESEARCH OPPORTUNITIES 7-16
7.8 REFERENCES 7-17

8 POLLUTION PREVENTION/SOURCE REDUCTION RESEARCH OPPORTUNITIES 8-1

APPENDIX A PRELIMINARY MARKET ANALYSIS A-1

APPENDIX B TRIP REPORTS B-1

LIST OF FIGURES

Number		Page
2-1	Combined Saturant Release Coat Line	2-6
2-2	Adhesive Coating Line	2-7
3-1	UV-Curable System - Continuous Web Configuration	3-3
3-2	Coater-Laminator with Curtain Electron Curing	3-5
3-3	Curtain Type Electron Processor	3-6

LIST OF TABLES

Number		Page
2-1	Raw Materials Consumed in 1987	2-2
2-2	Equipment for Conventional Tape and Label Manufacturing	2-4
3-1	Comparison of UV/EB Laminating Adhesives With Other Systems	3-8
3-2	Equipment Cost Summary	3-11
3-3	Summary of Printing Costs	3-12
3-4	Summary of Printing Study Energy Costs	3-13
7-1	Commonly Used Raw Materials in Hot Melt Adhesives	7-2
7-2	Adhesive Prices	7-6
7-3	Equipment Costs	7-8
7-4	Annualized Operating Costs	7-10
7-5	Energy Costs	7-11
7-6	Annualized Costs	7-15

CONVERSION FACTORS

To Convert From	To	Multiply by
LENGTH		
feet (ft)	meters (m)	0.3048
meters (m)	feet (ft)	3.281
inches (in)	centimeters (cm)	2.54
MASS OR WEIGHT		
ounces (oz)	kilograms (kg)	0.02835
pounds (lb)	kilograms (kg)	0.454
pounds (lb)	tons	0.0005
tons	pounds (lb)	2,000
tons	kilograms (kg)	907.2
kilograms (kg)	pounds (lb)	2.205
kilograms (kg)	tons	0.001102
VOLUME		
gallons (gal)	liters (l)	3.785
gallons (gal)	cubic inches (in^3)	231
gallons (gal)	fluid ounces (oz)	128
gallons (gal)	cubic meters (m^3)	0.00379
milliliters (ml)	fluid ounces (oz)	0.03381
liters (l)	gallons (gal)	0.2642
cubic inches (in^3)	gallons (gal)	0.004329
fluid ounces (oz)	gallons (gal)	0.007813
fluid ounces (oz)	milliliters (ml)	29.57
CONCENTRATION		
pounds/gallon (lb/gal)	grams/liter (g/l)	119.8
grams/liter (g/l)	pounds/gallon (lb/gal)	0.008345
DENSITY		
pounds/gallon (lb/gal)	grams/milliliter (g/ml)	0.1198
grams/milliliter (g/ml)	pounds/gallon (lb/gal)	8.345
PRESSURE		
pounds/$inch^2$ (psia)	mmHg or torr (mmHg)	51.71
pounds/$inch^2$ (psia)	atmospheres (atm)	0.0680
millimeters of mercury or torr (mmHg)	pounds/$inch^2$ (psia)	0.1934
TEMPERATURE		
Fahrenheit (°F)	Celsius (°C)	subtract 32, then multiply by 0.5556
Celsius (°C)	Fahrenheit (°F)	multiply by 1.8, then add 32

EXECUTIVE SUMMARY

Section 4(b) of the Pollution Prevention Act of 1990 requires the United States Environmental Protection Agency (EPA) to "review regulations of the Agency prior and subsequent to their proposal to determine their effect on source reduction." In support of the Pollution Prevention Act, EPA established the Source Reduction Review Project (SRRP) to focus this review on the regulations (and anticipated regulated industries) that may be promulgated under the Clean Air Act Amendments of 1990 (CAAA), the Clean Water Act (CWA), or the Resource Conservation and Recovery Act (RCRA). One of the goals of SRRP tasks is to ensure that source reduction and multimedia issues are considered during the development of upcoming air, water, and hazardous waste standards.

Maximum achievable control technology (MACT) standards to reduce hazardous air pollutants (HAPs) from major source categories are regulations under the CAAA and a focus of SRRP. Promulgation of these regulations began in 1992 and will continue throughout the decade and into the next century. The MACT standards offer EPA an excellent opportunity to use SRRP to incorporate pollution prevention measures into the upcoming standards for specific source categories. Pollution prevention efforts can, may, or sometimes offer economic and reduced health and ecological risk benefits to many sectors of society that are not available through traditional pollution control methods.

In support of the SRRP Program, MACT standards development, and the Pollution Prevention Act, EPA's Air and Energy Engineering Research Laboratory (AEERL) is investigating pollution prevention opportunities for product and material substitutions that help industry to reduce air emissions and waste. The specific objective of this project was to investigate the current industrial use and barriers to the extended use of radiation-curable coatings. Adhesive-Coated and Laminated Substrates (SIC 2671 and 2672), (typical products include: masking and duct tape, adhesive labels, and adhesive coated foam products), an industry facing upcoming MACT standards, was selected as an industrial segment to be the subject for this study. Thus, when the MACT standards are developed, EPA will have a better understanding of what coating technologies are feasible pollution prevention alternatives for this industry.

This report presents the results of a study to investigate and identify the technical, educational, and economic barriers to the use and implementation of radiation-curable coatings within the coated and laminated substrate industry. This project involved preparing category analyses, identifying and classifying the barriers to the use and implementation of the technology, evaluating and assessing the environmental impacts, and identifying pollution prevention and source reduction research opportunities. Information was collected for this project from a review of current technical literature through cooperation with industry leaders and the leading trade organizations and through visits to coated and laminated substrate facilities, radiation-curable coating and equipment suppliers, and an international trade show.

Radiation-curable processes for the coated and laminated substrate industry involve either electron beam (EB) or ultraviolet (UV) curing mechanisms to penetrate and cure the radiation-curable coating to the substrate. These two methods of curing provide many technical, economical, and environmental benefits to traditional solvent-based systems including increased bonding strength, resistance to chemical and thermal elements, increased throughput, reduced cost per unit area, and substantially lower environmental emissions. In addition, both EB- and UV-curing systems can use most available substrates, present coating application systems, and a reduced amount of floor space.

This report divides the barriers to implementing EB- and UV-curable systems into three categories: technical, economic, and educational barriers. Separate chapters examine each of the three barrier categories.

Technical barriers include: the lack of industry knowledge of these systems since no production line for coated and laminated substrate manufacturers is operating in the United States; equipment suitability; materials availability (coatings are manufactured and sold by few companies); product and adhesive performance characteristics (appearance, odor, and tack differences with solvent-based products); and health and safety issues (radiation as a means of curing).

Economic barriers provide a challenge to implementing either an EB- or UV-curing system. Economic concerns involve the capital investment of the system, pricing pressure from customers and competitors, the payback period of the machinery, and operating costs of the radiation-curing (specifically, EB-curing) mechanism.

The primary education barriers to implementing either an EB- or UV-curing system are divided into the viewpoints of management and employees. Management expressed concern about

the cost, performance, and productivity of the radiation-curing technology, where employees expressed concerns regarding handling radiation-curable coatings and radiation safety.

Hot melt adhesives, another alternative to solvent-based systems, is also discussed in this report. Hot melt adhesives are solids which are heated to their melting point and applied to the substrate in their liquid state. Hot melt adhesives are currently used in many applications and provide an alternative to the solvent-based systems. Certain hot melt adhesives can be reformulated and used as the EB system's adhesive. Technical, economic, and educational factors of hot melt adhesives are also examined.

This document identifies work areas for EPA that could help overcome the technical, educational, and economic barriers identified. Some of the opportunities discussed include the following:

- Convening a focus group containing representatives from industry, trade associations, environmental agencies, radiation-curable coating and equipment suppliers, and other interested parties to discuss identified barriers and identify others and begin the process to overcome these barriers.

- Investigating the use of radiation-curable systems within European markets to determine the problems or opportunities they have discovered as a result of actual production using these alterative adhesives.

- Researching the marketing difficulties associated with non-solvent-based products. A study of specific characteristics of a product which improve its marketability (*e.g.*, aesthetics) would be beneficial.

- Reviewing State economic incentive programs (EIP) which assist facilities in developing low-volatile organic compound (VOC) surface coatings. This information could be transmitted to coated and laminated substrate manufacturers to assist them in meeting the applicable requirements to receive the financial benefits.

- Developing a publicly available computer-based information system which would contain the performance characteristics of various adhesive formulations to assist coated and laminated substrate manufacturers in finding alternatives to solvent-based adhesives.

CHAPTER 1
INTRODUCTION AND PROJECT BACKGROUND

1.1 PROJECT BACKGROUND

Section 4(b) of the Pollution Prevention Act of 1990 requires the U.S. Environmental Protection Agency (EPA) to "review regulations of the Agency prior and subsequent to their proposal to determine their effect on source reduction."[1] In support of the Pollution Prevention Act, EPA established the Source Reduction Review Project (SRRP) to focus this review on the regulations (and anticipated regulated industries) mandated under the Clean Air Act Amendments of 1990 (CAAA), the Clean Water Act (CWA), or the Resource Conservation and Recovery Act (RCRA). One of the goals of SRRP tasks is to ensure that source reduction and multimedia issues are considered during the development of upcoming air, water, and hazardous waste standards. The following seventeen industrial categories are affected by the SRRP:[2]

- Acrylic Fibers/Modacrylic Fibers
- Degreasing Operations
- Integrated Iron and Steel Manufacturing
- Machinery Manufacturing and Rebuilding
- Paints, Coatings, and Adhesives Manufacturing
- Paint Stripper Users
- Paper and Other Webs Coating
- Pesticide Formulating
- Pharmaceuticals Production
- Plywood/Particle Board Manufacturing
- Polystyrene Production
- Printing and Publishing
- Pulp and Paper Production
- Reinforced Plastic Composites Production
- Rubber Chemicals Manufacturing
- Styrene Butadiene Latex and Rubber Production
- Wood Furniture Manufacturing

Maximum achievable control technology (MACT) standards to reduce hazardous air pollutants (HAPs) from major source categories are regulations under the CAAA and a focus of SRRP. Promulgation of these regulations began in 1992 and will continue throughout the decade and

into the next century. The MACT standards offer EPA an excellent opportunity to use SRRP to incorporate pollution prevention measures into the upcoming standards for specific source categories. The Pollution Prevention Act of 1990 defines pollution prevention as "any practice which reduces the amount of any hazardous substance, pollutant, or contaminant entering the waste stream or otherwise released to the environment (including fugitive emissions) prior to recycling, treatment, or disposal; and reduces the hazards to public health and the environment associated with the release of such substances, pollutants, or contaminants."[1] Pollution prevention efforts offer economic and reduced health and ecological risk benefits to many sectors of society that are not available through traditional pollution control methods.

In support of the SRRP Program, MACT standards development, and the Pollution Prevention Act, EPA's Air and Energy Engineering Research Laboratory (AEERL) is investigating pollution prevention opportunities for product and material substitutions that help industry to reduce air emissions and waste. The specific objective of this project was to investigate the current industrial use and barriers to the extended use of waterbased, hotmelt, and radiation-curable coatings. Radiation-curable, hot melt, and waterbased coatings have been demonstrated to reduce pollution in several specific end-use categories.

During the first task of this project, the 52 SIC categories (under the 17 SRRP categories) were identified as having the possible potential to use radiation-curable, and waterbased coatings as pollution prevention alternatives. During this phase, contacts were made with representatives from coating suppliers and trade associations and limited literature searches were completed. From this list of 52 potential industries, 10 were selected for further study. Preliminary market analyses were prepared for each of these 10 categories. Following the completion of the 10 analyses, 3 industry segments were selected for investigation: adhesive-coated and laminated substrate manufacturing (SIC 2671 and 2672), metal can coating (SIC 3411), and commercial printing, not elsewhere classified (SIC 2759). This report focuses on the coated and laminated substrate manufacturing industry. A separate project has been initiated by AEERL to investigate waterbased coatings. In addition, another pollution prevention alternative for the coated and laminated substrate manufacturing industry is the use of hot melt adhesives. Therefore, waterbased coatings were eliminated and the focus of the project became the barriers to the use of radiation-curable and hot melt coatings, in coated and laminated substrate manufacturing.

1.2 PROJECT OBJECTIVES

This report presents the results of a study to investigate and identify the technical, educational, and economic barriers to the use and implementation of radiation-curable and hot melt coatings within the coated and laminated substrate manufacturing industry. This project involved preparing category analyses, identifying and classifying the use and implementation barriers, evaluating and assessing the environmental impacts, and identifying pollution prevention and source reduction research opportunities within the coated and laminated substrate manufacturing industry. In order to successfully accomplish these objectives, information was collected from several sources including literature searches, plant visits, pollution prevention experts, and industry and trade association personnel.

Literature searches of the EPA on-line databases, local university library databases, and Dialog® were conducted. The Pollution Prevention Information Clearinghouse (PPIC) and the Pollution Prevention Information Exchange System (PIES) were also accessed. The E-Mail capabilities of PIES were also used to communicate with other PIES users with knowledge of the coated and laminated substrate manufacturing industry.

In addition to conducting literature searches, contacts were made with industry and pollution prevention experts within the Pressure Sensitive Tape Council (PSTC), RadTech International, the Tag and Label Manufacturers Institute (TLMI), and equipment and coating manufacturing firms.

The final source of project and industry information was compiled during a total of two site visits. Copies of the site visit reports are included in Appendix B of this report. Together, these information gathering efforts provided the background needed to identify the barriers and source reduction research opportunities within the coated and laminated substrate manufacturing industry.

1.3 INDUSTRY SEGMENT DESCRIPTION

The focus of this report is the manufacturing of coated and laminated substrates, including tapes, labels, and decals. The industry spans two 4-digit standard industrial classification (SIC) codes; SIC 2671 (Paper and Plastic Films Coated and Laminated for Packaging), and SIC 2672 (Paper and Plastic Films Coated and Laminated, Not Elsewhere Classified). The industry can be divided into two segments: coated webs for packaging uses; and adhesives-coated products.

The coated and laminated substrate manufacturing industry was selected for investigation for three reasons. First, the industry is the largest source of methyl ethyl ketone (MEK) and the third largest source of toluene releases as accounted for in EPA's Toxic Release Inventory (TRI). According to the TRI, the industry emitted approximately 16.1 million pounds per year (7.3 million kilograms) of MEK and 26 million pounds per year (12 million kilograms) of toluene in 1990.[3] A reduction in these emissions may also produce a corresponding reduction in ozone formation and help some areas of the country reach attainment levels for the national ambient air quality standard (NAAQS) for ozone.

The second reason for selection of this industry is the potential for research and development opportunities. At the completion of this study, no facilities in this industry were using radiation-curable adhesives in a production environment. All work is being done on a pilot-scale basis. Although hot melt adhesives are used, the potential for further market penetration is substantial. The AEERL has been charged with providing technical assistance to industry in the area of research and development. By preparing this report, AEERL will further the dialogue between the coated and laminated substrate manufacturers and the adhesive manufacturers.

The final reason for the selection of coated and laminated substrate manufacturing is the timing of this industry's MACT standard. The EPA has scheduled its promulgation of this industry's standard in the year 1997.[4] This schedule gives the agency over two years to develop a standard that will properly implement the SRRP approach to regulatory development. Using this report as a source of background information, EPA will have the time to consider several pollution prevention alternatives for the coated and laminated substrate manufacturing industry. Based on the assessment of alternatives, the EPA will be able to develop a MACT standard that is efficient, effective, and flexible for the coated and laminated substrate manufacturing industry to implement.

1.4 REPORT ORGANIZATION

This report is divided into eight chapters and two appendices. Chapter 2 describes the conventional manufacturing processes and includes a discussion of the material inputs, manufacturing equipment, physical processes, product outputs, and emissions and wastes. Chapter 3 includes a basic discussion of the alternative technology under investigation. This chapter evaluates the process, cost, and emissions and waste differentials between the conventional and alternative processes. Chapter 4 identifies the technical barriers to the extended use of radiation-curable coatings. It includes a description of the difficulties with, and available information on, solutions currently under consideration. Chapter 5 discusses educational barriers, and Chapter 6 identifies educational barriers. Chapter 7 describes hot melt adhesives which either are, or could be, used to replace conventional processes. The last chapter, Chapter 8, presents additional source reduction and pollution prevention research opportunities. Appendix A contains a copy of the preliminary market analysis that was developed during the early stages of this project. Appendix B contains copies of the trip reports prepared as part of the data gathering effort.

1.5 REFERENCES

1. Pollution Prevention Act of 1990, 42 U.S.C. §13101, et seq.

2. U.S. Environmental Protection Agency. *Source Reduction Review Project*. EPA-100/R-92-002. Office of the Administrator, Pollution Prevention Policy Staff. Washington, DC. March 1992.

3. Toxic Chemical Release Inventory Database. U.S. Department of Health and Human Services, National Institutes of Health, National Library of Medicine. Bethesda, MD. Toxicology Information Program Online Services TOXNET® Files. 1990.

4. *The Air Pollutant Consultant*, Volume 3, Issue 1, McCoy and Associates, Inc., Lakewood, CO. January/February 1993.

CHAPTER 2
CONVENTIONAL PROCESS DESCRIPTION

2.1 GENERAL

This chapter provides an overview of the coated and laminated substrate manufacturing industries. The chapter is divided into five sections: (1) Material Inputs, (2) Equipment, (3) Conventional Process Description, (4) Product Outputs and (5) Emissions and Waste. The material inputs and equipment sections address the raw materials and equipment necessary to manufacture coated and laminated products. The conventional process description section describes the various elements of the manufacturing process with specific product examples. The last section characterizes the air emissions and liquid and solid waste streams that result from current industry manufacturing practices.

2.2 MATERIAL INPUTS

The raw materials used in the coated and laminated substrate manufacturing process consist of substrates, adhesives and other coatings, and cleaning materials. Commonly used raw materials for both SIC 2671 and SIC 2672 facilities are listed in Table 2-1.

2.2.1 Substrates

A substrate (backing) is the material to which an adhesive is applied to make the desired product. Substrates are supplied on large, continuous rolls called webs. Substrates provide strength, protection, and/or a colored surface for the adhesive. Substrate categories include paper, polymer film, fabric, foil, and foam. Paper and film are the two most frequently used substrate materials.[1,2]

TABLE 2-1. RAW MATERIALS CONSUMED IN 1987

Material	Quantity	
	million pounds	million kilograms
INDUSTRY 2671, PAPER COATED AND LAMINATED, PACKAGING		
Primary Materials, parts, containers, and supplies		
Paper	926	420
Glues and adhesives	NA	NA
Plastics resins consumed in the form of granules, pellets, powders, liquids, etc.	520.9	236
Plastics, products consumed in the form of sheets, rods, tubes, and other shapes	NA	NA
Printing ink (complete formulations)	NA	NA
Petroleum wax	30.1	13.7
Paperboard containers, boxes, and corrugated paperboard	NA	NA
Aluminum foil:		
Plain	25.9	11.7
Converted	NA	NA
INDUSTRY 2672, PAPER COATED AND LAMINATED, N.E.C.		
Primary Materials, parts, containers, and supplies		
Paper	NA	NA
Glues and adhesives	NA	NA
Plastics resins consumed in the form of granules, pellets, powders, liquids, etc.	NA	NA
Plastics, products consumed in the form of sheets, rods, tubes, and other shapes	NA	NA
Printing ink (complete formulations)	NA	NA
Petroleum wax	NA	NA
Paperboard containers, boxes, and corrugated paperboard	NA	NA
Aluminum foil:		
Plain	NA	NA
Converted	NA	NA

Source: Reference 1
NA = Not Available
N.E.C. = Not Elsewhere Classified

2.2.2 Coatings

The various coatings applied, along with the type of substrate, define the end-use of a coated and laminated product. Coatings typically consist of solvents, resins, and additives, with the composition varying depending on the desired characteristics. Some commonly used coatings include saturants, release coats, tie coats, and adhesives. Not all coated and laminated products incorporate all of these coatings. For example, saturants are used primarily with paper substrates, while tie coats are used mainly with film products. A brief discussion of each type of coating follows.

Saturants are mixtures applied to raw paper to improve the paper's internal strength and resistance to various environments.[3] ***Release or backsize coatings*** are applied to the substrate on the side opposite of the adhesive. The release coat allows rolled adhesive products to be unwound, prevents tearing, and provides resistance to fluids.[3] ***Tie coats or primers*** are coatings applied between natural rubber adhesives and film substrates to improve the bond between the adhesive and the film.[2,4] ***Adhesive*** is applied to the saturated and/or release-coated substrate. The adhesive product may contain petroleum resins, solvents, natural and synthetic rubber, antioxidant, and filler.[3] Adhesives are required to have three main properties: peel adhesion, cohesive holding power, and surface tack.

2.3 EQUIPMENT

Table 2-2 lists the equipment used to manufacture tapes and labels on a conventional line. The process description provides more detail on the function of each piece of equipment.

2.4 CONVENTIONAL PROCESS DESCRIPTION

The manufacturing process consists of three basic steps: adhesive mixing, tape or label stock manufacturing, and roll converting. Adhesive components are brought into the plant in bulk, stored in inventory, and mixed as operations require. Mixed coatings are stored in process holding tanks until they are needed at the coating line. Master rolls (*i.e.*, webs) of substrate (*e.g.*, paper, foil, film), each approximately 3,000 yards (2,743 m) long, are loaded on the machinery.

TABLE 2-2. EQUIPMENT FOR CONVENTIONAL TAPE AND LABEL MANUFACTURING

Equipment	Function
Banburys	Used to mix rubber stock and mill/extrude rubber sheets
Mixing tanks	Mixes rubber many times in the form of sheets, thinning solvents, and other additives to make liquid adhesive
Wind/Unwind rollers	Loading and unloading rollers that supply web to the coating area
Idler rollers	Maintain tension on web to allow for even application of the coatings
Coating head	Supplies coating to the dam
Dams and ears	Hold the coating for application to the web
Application rollers	Receive coating from dam or trough and applies to web
Metering rollers	Meter thickness of coating on web
Troughs	Capture overflow of coating from the dams

The web is fed through rollers, which maintain tension on the material to allow even coating. After the coating is applied, the web is led through the dryer to a rewind station. The conventional solvent-based system is also referred to as a thermal system due to the thermal drying. The application of each coating (*e.g.*, saturants, release coats, tie coats, and adhesives) is performed in the same manner. The coatings can be applied on a single line or on separate lines. Once the product has been coated with the necessary materials, it is sent to the slitter area for conversion to smaller rolls. The finished product is packaged and sent to a holding area for movement to the warehouse for shipment.

2.4.1 Adhesive Mixing

Adhesives provide a bond between the substrate and the object to which the substrate is applied. A variety of adhesives can be used in the manufacturing process. The formulation of solvent-based adhesives involves combining adhesive stock, petroleum resins, natural and/or synthetic rubber, antioxidants, and/or filler in banburys (rubber mix tanks) which are used to mix

the rubber substrate and mill/extrude the rubber sheeting. The adhesive is placed in a mixing tank along with a dissolving solvent and other ingredients to make the liquid adhesive. The solvent used in most solvent-based adhesives is toluene (virgin and reclaimed). After mixing, the adhesives are pumped through cloth filters, which remove large particles, to process troughs on the production lines or to storage tanks.

2.4.2 Adhesive Tape Manufacturing

The process description contained in this section is specific to paper tape (*e.g.*, masking tape) production. However, by either eliminating the saturation step or by replacing it with another coating step (*i.e.*, tie coating) and by substituting the paper web with another substrate, the product output is virtually limitless.

The first step in adhesive tape manufacturing is to create a saturated substrate. This is done by passing the raw substrate, paper, through a saturant bath. The saturation process gives the paper extra strength to prevent tearing. The paper then travels through a drying oven which evaporates the carrier. If the saturant is waterbased, the evaporated water is emitted to the atmosphere. If the carrier is a solvent, some type of control device is normally used. The saturated paper is then roll-coated with a release coating. The amount of coating is regulated by a metering device, often a doctor blade. The substrate is then fed through another dryer and rewound. In applying the release coat on a single-sided tape, only one side of the paper is coated. This is the side opposite where the adhesive will be applied. The release coat's purpose is to allow the tape to be unrolled without tearing or breaking. Figure 2-1 shows a diagram of a combined saturant and release coat line.

The saturated/release-coated substrate is then fed on an adhesive-coating line, illustrated in Figure 2-2. There are several methods by which adhesive can be applied. The most commonly used application methods are reverse-roll, direct-roll, and gravure. The method described in this section is reverse-roll. The adhesive is applied to the side opposite the release coat by a reverse application roller, that is, the application roller rotates counter to the direction that the web is moving. The amount of adhesive applied is regulated by a metering roller which restricts the feed to the application roller. Adhesive spills are captured in a catch basin located below the adhesive/paper contact point. Once the adhesive is applied, the paper is fed into a

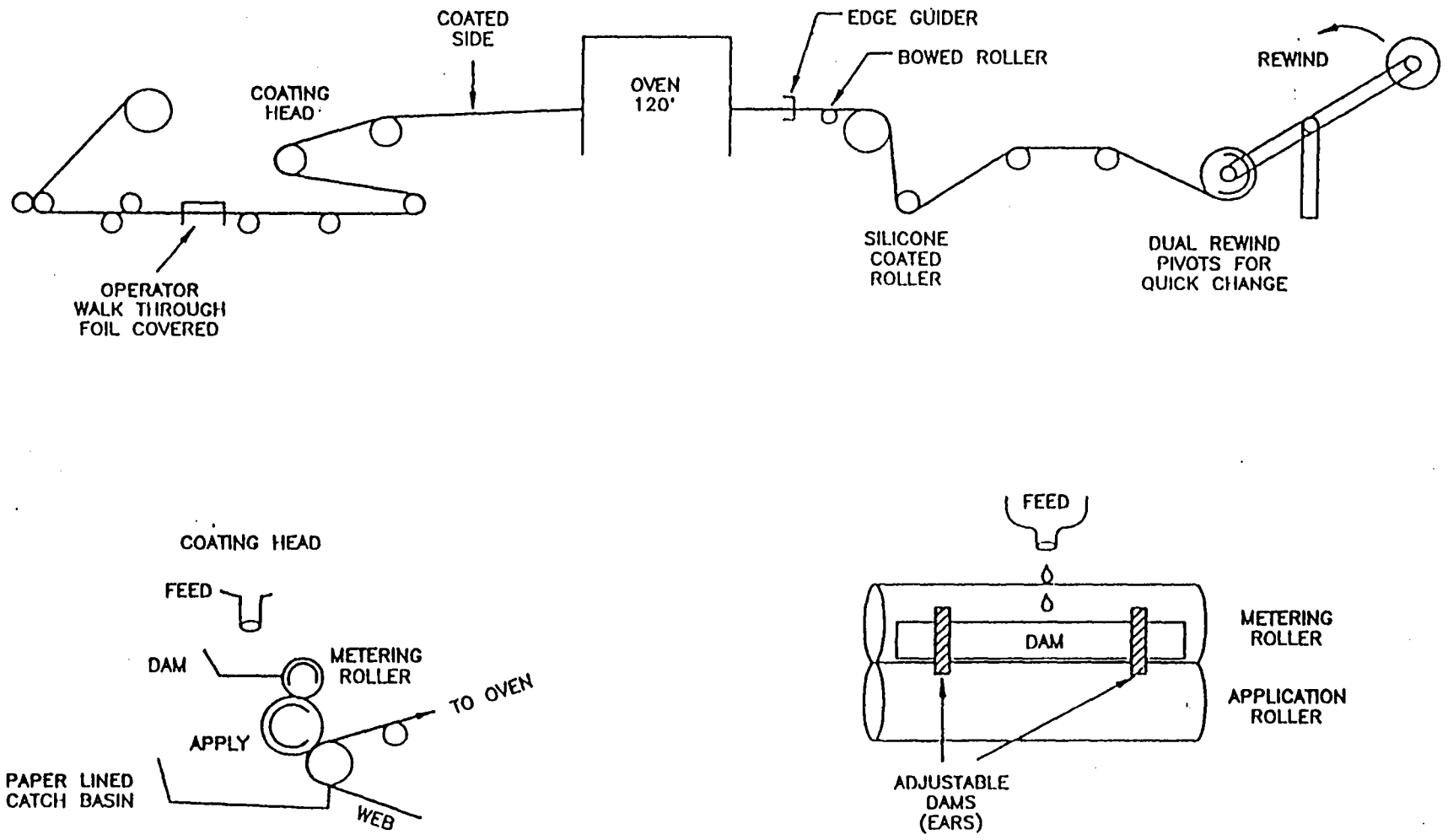

Figure 2-1. Combined saturant release coat line.

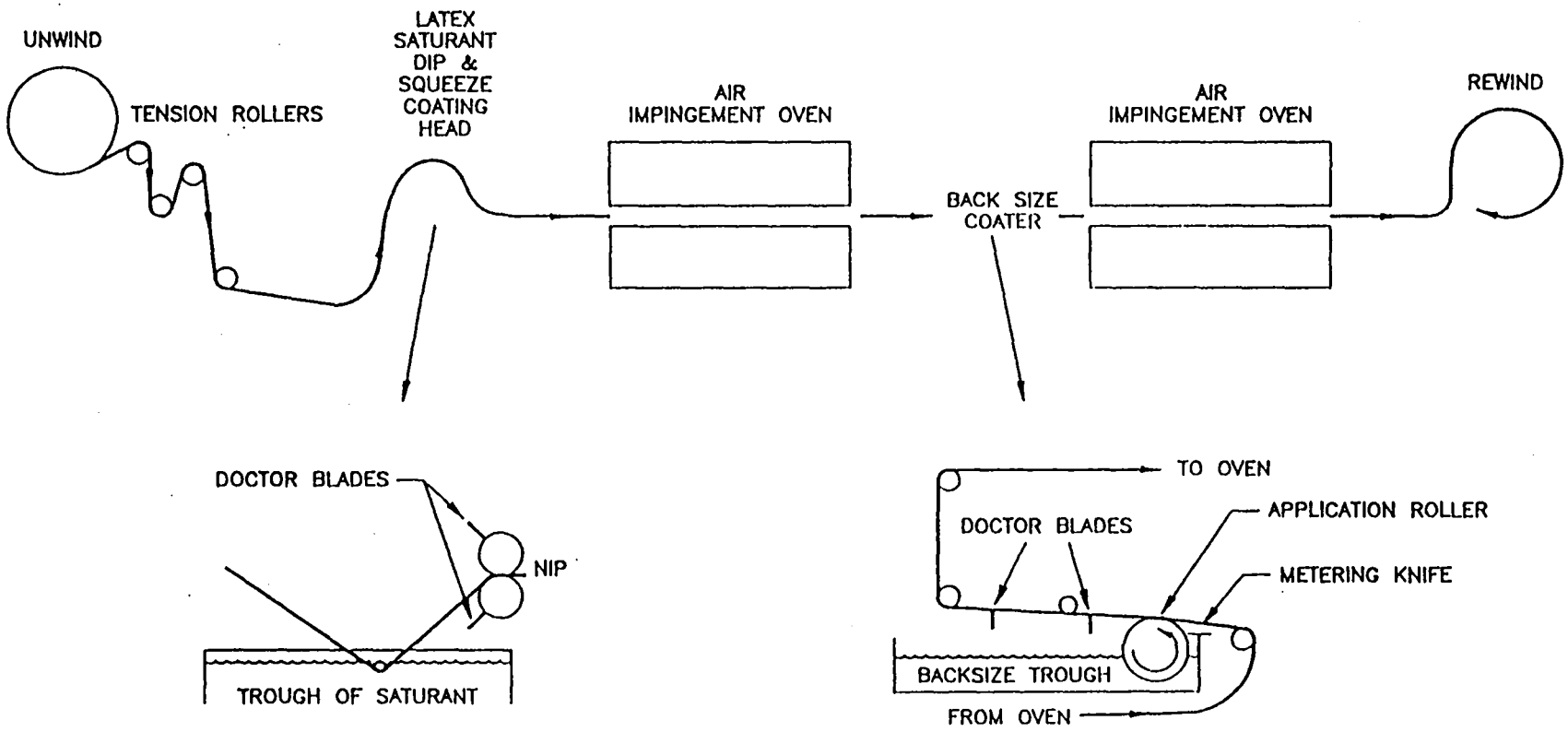

Figure 2-2. Adhesive coating line.

dryer which volatilizes the vehicle solvent. In most cases, the organic vapors are routed to some type of abatement or control device. However, many small plants route their oven exhaust directly to the atmosphere. The paper is then wound and sent to the storage area or directly to the slitting department for further processing.

The slitting department performs cutting and sizing operations. Excess edge portions of the product roll, known as slitter-ends, are removed from the web and either placed in a dumpster to be transported to a municipal landfill or sold to a converter. The end result of a slitting operation might be converting a 60 inch (152.4 cm) wide by 3,000 yard (2,743 m) long roll of product into thousands of rolls of 0.25 inch (0.64 cm) wide tape. These cut rolls are then moved to the pressroom for custom orders or the finish room for packaging before warehousing and shipment as a finished product. The warehouse holds custom orders and stock products awaiting shipment. Off-specification product is often boxed and sold to a distributor/converter or disposed of in a municipal landfill.

On each line there are rollers that serve specific purposes. For example, tension rollers help maintain tension on the paper so the coating can be applied evenly (see Figure 2-1). Bowed wooden rollers help to remove any wrinkles prior to product rewind. The coating application area or coater head also has two types of rollers. An application roller receives the coating from a trough or another roller and applies it to the substrate. A metering roller helps control the amount of coating applied to the application roller or the substrate. Additionally, a doctor blade is used to remove any excess coating applied to the substrate.

There are several additional devices on the coaters which are important to the application process. Dams are devices which hold the coating for application. The coatings are pumped from holding tanks or drums through filtered pipes/hoses to the dam. The dams have adjustable "ears" which are placed in position in relation to the width of the substrate. The coating is applied within a fraction of an inch of the edge of the substrate, leaving an uncoated margin to avoid contamination of rollers and machinery. Troughs are located beneath dams to capture any overflow. Pneumatic edge guides are often used at the exit of the dryer to sense the edge of the web, keeping it straight and allowing for smooth and even rewinding. Many of the rollers on the lines are coated with silicone, tape, or plasma coatings to prevent adhesive or other coatings from drying on the rollers and sticking to the web as it passes. These coatings also facilitate cleaning.

Many larger companies also use a dual rewind pivot (See Figure 2-1). At the start of a production run, the web is placed on one arm of the pivot. When the operators determine the process is running within the control limits, the device pivots and the operator breaks the substrate, attaching it to the second roller. The set-up material is either disposed of as waste or sold as substandard product at reduced prices. The rewind pivot is also used at the end of a production run when one web has run out and the next web is beginning.

2.5 PRODUCTS

There are several types of products manufactured by coated and laminated substrate manufacturers. Two of the largest product categories are tapes and labels. Classes of tape, identified by construction, include woven and nonwoven fabric tape, paper tape, film tape, foil tape, and foam tapes. Some of the web materials mentioned previously are used in combination with glass, rayon, nylon, polyester, or acetate fibers to produce reinforced substrates. Films such as polyethylene, polyester, or polypropylene are often combined with these fibers to produce tapes used in heavy-duty packing and bundling applications. The type and number of reinforcing strands per area, the thickness of the coating applied, and the type of film used differentiate the grades and types of film tape.[2,4] Two-faced tapes are substrates with an adhesive coating applied on both sides of the substrate (usually foam or film). Two-faced tapes have both heavy-duty uses in carpet tapes and light-duty uses in business forms and nametag applications.

Tape end-use categories include the following:[2,4-5]

- *Medical and first aid tapes.* These tapes were the first application of pressure-sensitive products. These products are used by doctor's offices, and at home for first aid purposes, foot care, and athletic protection wraps.

- *Office and graphic art tapes.* These tapes were first produced as clear cellophane film tapes, but now include many other substrate varieties.

- *Packing and surface protection.* Film tapes are the most frequently used tapes for packaging. Saturated paper tape is still dominant in surface protection tape applications and sheet products.

- *Building industry products.* These include tapes used for paint masking, temporary attachment of wood products, weather sealing a building, bridging narrow cracks to

overpaint, electrical wrapping, coverings for doors and walls, floor tile installation, and glass treatments.

- *Electrical tapes.* These tapes include two classes: tapes intended for original equipment manufacturers (OEM) and tape for electrical insulation during installation. Current OEM tape may have cloth, film, paper, aluminum foil, nonwoven fabrics, or laminated substrates depending upon the desired qualities in the backing. Electrical installation tapes often have either a plasticized vinyl or polyethylene film backing.

- *Automotive industry products.* These are used in the electrical system of automobiles. These products are similar to the OEM tapes discussed above. Other automotive tape products include tape strips used to mount interior moldings and trim.

- *Shoe industry tapes.* These are used to cover the backseam to reduce pressure spots. Fabric, paper, and film tapes may be used in this application. Tapes are also used in binding and reinforcing areas in the construction of shoes.

- *Appliance industry products.* These products include decorative strips, nameplates, foam gasketing, and foam pads for sound insulation for attachment to appliances.

- *Splicing tapes.* These are used to splice various webs during manufacturing operations. Paper tapes, two-faced tapes, and film tapes are used for this purpose.

- *Corrosion protective tapes.* These tapes help to prevent the breakdown of materials covered by the tape. Consumption of polyethylene film tapes for corrosion protection is very large.

Label manufacturing is similar to pressure sensitive tape manufacturing, with priority properties being printability, flatness, ease of die cutting, and release paper components. A label manufacturer may sell his product either in rolls or sheets as a final product, or as a raw product for a printing and die cutting operation.[2,4]

Other adhesive-coated and laminated product lines include adhesive-coated floor tiles, wall coverings, automotive and furniture woodgrain films, and decorative sheets.

2.6 EMISSIONS AND WASTE

2.6.1 Air Emissions

In 1990, the total of all MEK releases to the air by facilities operating under SIC 2671 was 1.1 million pounds (0.5 million kilograms).[6] Toluene air releases totalled 8 million pounds (3.6 million kilograms).[6] SIC 2672 facilities emitted nearly 15 million pounds (6.8 million kilograms) of MEK and 18 million pounds (8.2 million kilograms) of toluene.[6] Most coated and laminated substrate manufacturing facilities calculate these emissions based on raw material consumption. Therefore, total emissions reflect solvent losses occurring during raw material mixing, coating processing (including fugitive releases), equipment cleaning, and material storage.

The primary impacts of VOC reductions are dependent on the facility location. In heavily industrialized areas, the reduction of VOC emissions may produce a corresponding reduction in ambient hydrocarbon levels, and a corresponding reduction in ozone formation. In rural areas, lower VOC emissions will result in lower overall ambient hydrocarbon levels, helping to reduce the transport of ozone precursors to urban areas. In addition, the reduction of air toxics will lead to reduced environmental impacts on other media. For example, improperly handled chlorinated materials (*e.g.*, methyl chloroform) often result in contaminated soil and groundwater. Reducing the quantities of these materials used for cleaning will reduce the number of contaminated aquifers, drinking water wells, and soils.

Emissions from the application of solvent-based coatings are often directed to a control device (*e.g.* carbon adsorption, catalytic or thermal incinerators). While such control devices reduce VOC emissions, the use of incineration will actually increase ambient levels of carbon dioxide (CO_2) and nitrogen oxides (NO_x) in the area and potentially offset VOC reductions. A facility must be aware of the reductions of a particular pollutant and increases in emissions of other pollutants associated with a particular control device.

2.6.2 Liquid Waste Streams

Spent cleaning solvents are the largest liquid waste produced by coated and laminated substrate manufacturers. Many of these solvents are recoverable through distillation and can be incorporated in a future coating formulation, however they may also be sent off-site for disposal. A second liquid waste stream consists of excess or off-specification coating.

Facilities are responsible for the environmental impacts that their water may have on a sewer or water system. A facility must always consider the effects of a new liquid waste stream on plant wastewater treatment (WWT) operations or on the Publicly Owned Treatment Works (POTW). Some cleaners may reduce toxicity, hazardous waste, and air emissions, but create excursions in effluent limitations.

2.6.3 Solid Waste

Solid waste in the form of drums of coatings and solvent waste from the manufacturing operations may be classified into three areas: cleaning waste, waste substrate, and solidified coating waste. Solid waste from cleaning includes items such as rags, floor coverings, machinery coverings, and coating filters. Waste substrate (from the edge of substrate rolls, at the beginning and end of a run, and from cutting and packaging operations) disposal is dependent on local/state regulations but it can generally be disposed of as nonhazardous waste. The characteristics of the solvent remaining on the substrate also affect its classification as solid waste. Solidified coating waste is coating which has dried.

In addition, solid waste may be created by emissions control equipment. Activated carbon from carbon adsorption systems must be replaced periodically, presenting a solid waste disposal problem. The remains of ash and sludge from incineration or ash, sludge, and spent catalyst from catalytic oxidation must be disposed of properly, usually as solid waste (however, testing should be conducted periodically to determine if the waste should be treated as a hazardous material). Waste from incineration or oxidation may also have alternative uses.

2.7 REFERENCES

1. U.S. Department of Commerce. *1987 Census of Manufactures, Industry Series: Converted Paper and Paperboard Products, Except Containers and Boxes*, MC87-1-26C. Bureau of the Census. Washington, D.C. 1990.

2. Satas, Donatas. *Handbook of Pressure-Sensitive Adhesive Technology.* Van Nostrand Reinhold Company. New York, NY. 1982.

3. "Shurtape®, What is pressure-sensitive tape?" Shuford Mills, Inc., Hickory, NC. Provided in Memorandum from W.H. Little, Jr. to Radian Corporation, Research Triangle Park, NC. June 12, 1992.

4. McMinn, B.W. and Vitas, J.B. *Improved Equipment Cleaning in Coated and Laminated Substrate Manufacturing Facilities (Phase I).* EPA-600/R-94-007. (NTIS PB94-141157). U.S. Environmental Protection Agency, Air and Energy Engineering Research Laboratory, Research Triangle Park, NC. January 1994.

5. Goodwin, Don R. *Pressure Sensitive Tape and Label Surface Coating Industry - Background Information for Proposed Standards: Draft EIS.* EPA-450/3-80-003a. (NTIS PB81-105942). U.S. Environmental Protection Agency, Office of Air Quality Planning and Standards, Research Triangle Park, NC. August 1980.

6. Toxic Chemical Release Inventory Database. U.S. Department of Health and Human Services, National Institutes of Health, National Library of Medicine. Bethesda, MD. Toxicology Information Program Online Services TOXNET® Files. 1990.

CHAPTER 3
DESCRIPTION OF RADIATION-CURING

3.1 PROCESSES

3.1.1 Introduction

This section gives an overview of radiation-curing in the coated and laminated substrate manufacturing industry and includes a discussion of raw materials, equipment, physical processes, product performance, and emissions and wastes. Radiation-curing systems use either ultraviolet (UV) light or electron beam (EB) curing mechanisms to penetrate and cure a radiation-curable coating to a substrate. The use of radiation-curing/laminating systems has been increasing in recent years in markets such as food packaging, printing, graphic arts, and roll converting. Radiation-curing technology is currently being used with a wide variety of web substrates including paper, films, and foils.

3.1.2 Raw Materials

In general, the raw materials used in a radiation-curing process for coated and laminated substrates are the same as those used with conventional thermal systems. These materials consist of substrates, adhesives, and other coatings. The UV-curable and EB-curable adhesives have been applied to paper, film, and foil webs as have their solvent-based adhesive counterparts. They have been used to laminate polyester, polycarbonate, polyethylene, and cellulose acetate films. At this time, the only web substrate to which UV-curable and EB-curable coatings have not been successfully applied are those that are porous in nature, such as the fabric which may be used in medical tapes.[1] Because the substrates used in both radiation-curable and thermal coating and laminating systems are very similar, this section will focus on the coatings.

A coating must perform in a specific manner to meet customer demands. Whether these coatings are solvent-based or radiation-curable is irrelevant as long as customer specifications are met. Release coats manufactured for compatibility with EB-curable and UV-curable adhesives are

often 100 percent solvent-free silicone acrylate. One manufacturer of EB-curable release coatings has received approval from the Food and Drug Administration (FDA) to use their coatings in food containers and other related applications. Specially formulated release coatings are critical in the EB-curing adhesive process because of the increase in tack associated with EB-curable adhesives. Currently available release coatings used with thermal systems will not perform properly with radiation-curable adhesives and will need to be reformulated or replaced.

Radiation-curable adhesives include both UV-curable and EB-curable varieties. UV-curable coatings consist of monomers, which reduce the coating's viscosity and provide application characteristics; oligomers, which give the coating its physical and performance characteristics; pigments; fillers; inhibitors, which improve shelf life; and photoinitiators, which speed the curing process. The UV-curable adhesives contain a photoinitiator which initiates the polymerization of the adhesive to the substrate when exposed to a UV light. EB-curable hot melt pressure sensitive adhesives contain 100 percent solids with polymers, monomers, additives, but no photoinitiator. EB-curable low-melt adhesives which require less heating than hot melts and are developed to perform like solvent-based acrylic adhesives are currently being introduced in Europe. In the EB system, the electrons that are generated react directly with the monomers and polymers, eliminating the need for a photoinitiator.[2]

3.1.3 Equipment

Radiation-cured coating and application equipment differs from conventional equipment in one area: the curing mechanism. Both thermal and radiation-curable systems operate unwind, coating, curing, and drying/rewind stations. In conventional adhesive curing, a thermal dryer is used to heat and dry or cure the coating. The thermal dryer system relies on electricity or natural gas to heat the air which then dries/cures the coating. In a radiation-curing system, energy beams are used to cure the coating. UV-curing equipment consists of a UV lamp suspended above the coated substrate, a light reflector, a radiation shield, and a cooling system. Mercury lamps are frequently used to provide the UV-curing mechanism. The substrate with the wet coating passes under the light and is exposed to the UV wavelengths which crosslink the polymers and monomers, creating a uniform adhesive layer. Production line speeds for UV-curing equipment range from 100 to 800 feet

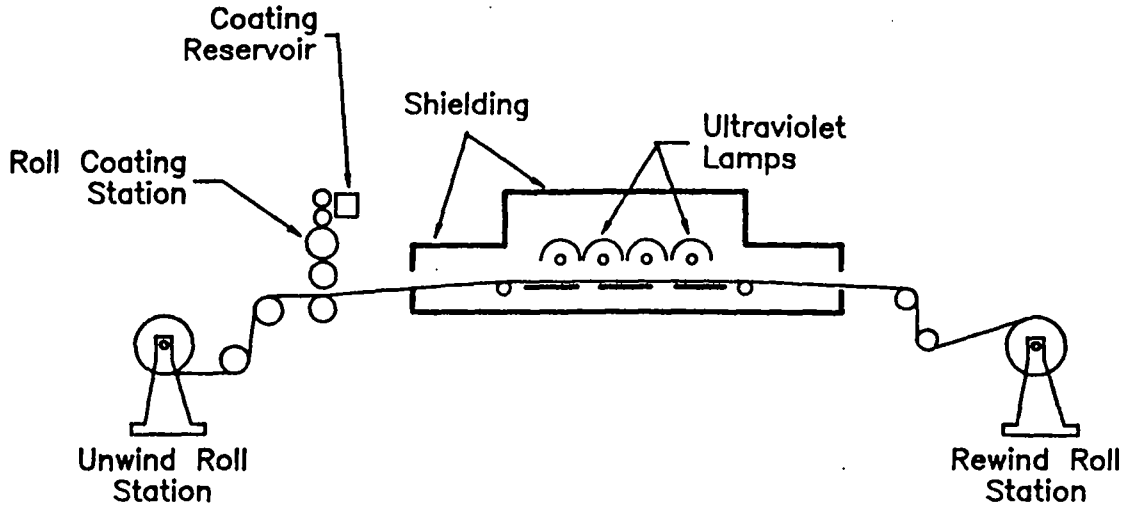

Figure 3-1. UV-curable system - continuous web configuration.[5]

per minute (fpm) (30.5 to 245 meter/minute). Figure 3-1 is a schematic of the UV-curing equipment.

EB-curing equipment consists of a control panel to regulate the amount of energy, a transformer to control line voltage, an electron accelerator to deliver the EB energy, and a nitrogen-inerting system to prevent ozone formation.[3] Figures 3-2 and 3-3 are diagrams of an EB production line and a cross section of the EB curing processor, respectively. Production line speeds for EB-curing equipment can exceed 1,600 fpm (488 meter/minute). Operations in excess of 1600 fpm will need a specialized nitrogen-inerting system to prevent unacceptable ozone emissions.[4] The curing method for EB is similar to the UV process.

3.1.4 Physical Processes

UV-curing and EB-curing represent the two most widely used radiation-curing methods. Each has process advantages and disadvantages which are discussed in detail below.

UV polymerization occurs when a specially formulated coating comes into contact with a UV light source, primarily a mercury lamp. The characteristics of the coating and substrate effect the UV energy being absorbed by the photoinitiator. The curing of the coating is also dependent on both of these factors.[3] If the UV energy does not penetrate the coating effectively, much of the coating will not be cured. UV energy does not penetrate thick, dark, or colored coatings or substrates very well.[4]

EB-curing occurs when a specially formulated coating is exposed to electrons. The proper curing of an EB adhesive is dependent on the mixture of raw materials and the level of energy used to power the electrons. One advantage that EB has over UV is that the electrons can cure the layers of 100 percent solid adhesives. This ability allows EB-curing to be used on a variety of substrates.[3] However, if the ratio of energy to raw materials is not properly determined, a substrate can be damaged (*e.g.*, paper can become brittle).[4] EB-curing is similar to UV-curing with one notable exception: the UV-curing requires a photoinitiator to generate the free radicals. Both systems cure the coating in approximately one second.[3]

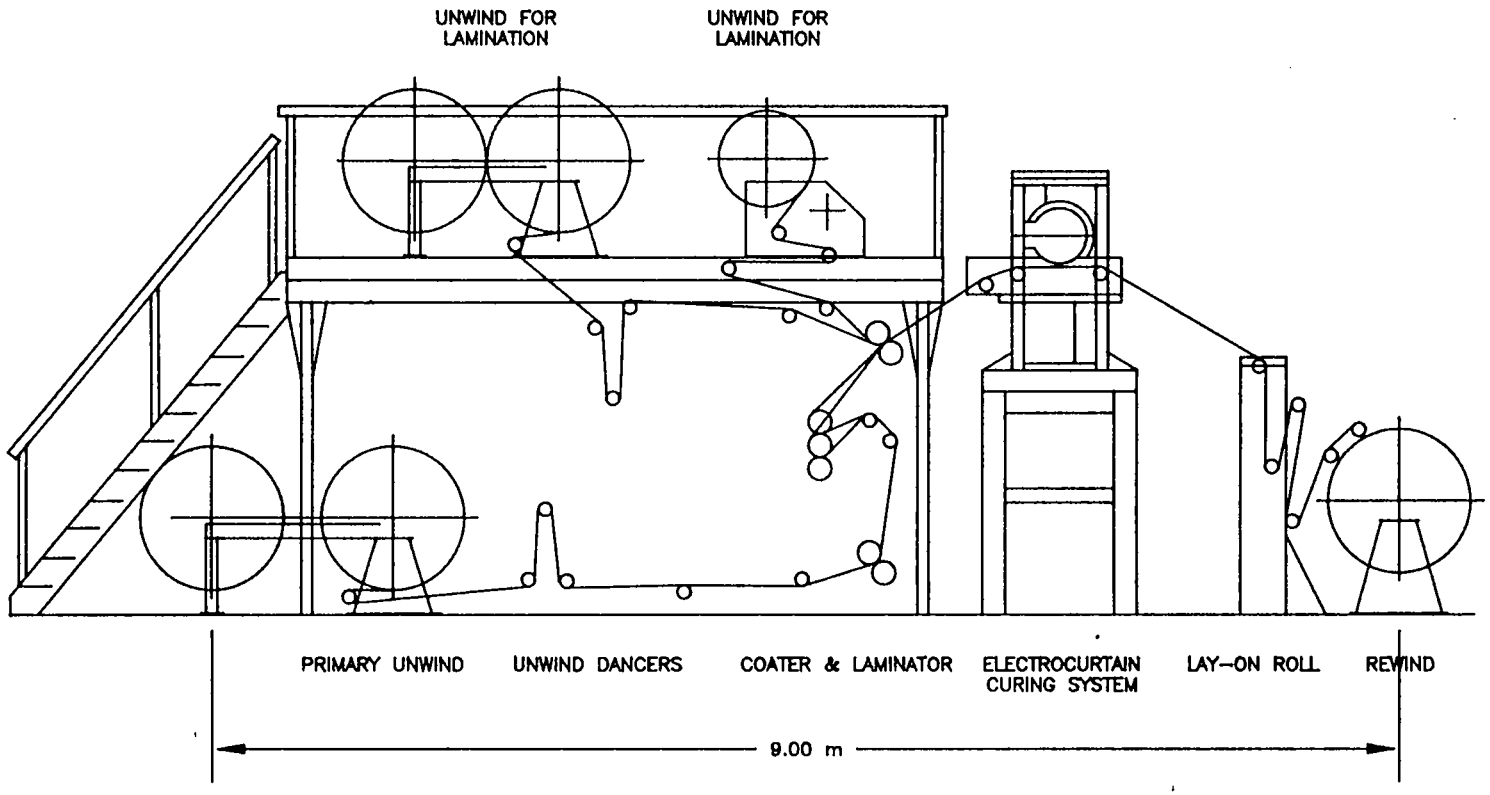

Figure 3-2. Coater-laminator with curtain electron curing.[6]
(Reprinted with permission from Nablo, Sam V. and E.P. Tripp III. "Electron Curing of Coatings and Adhesives," *Hot Melts-An Overview for Management*. 1979.)

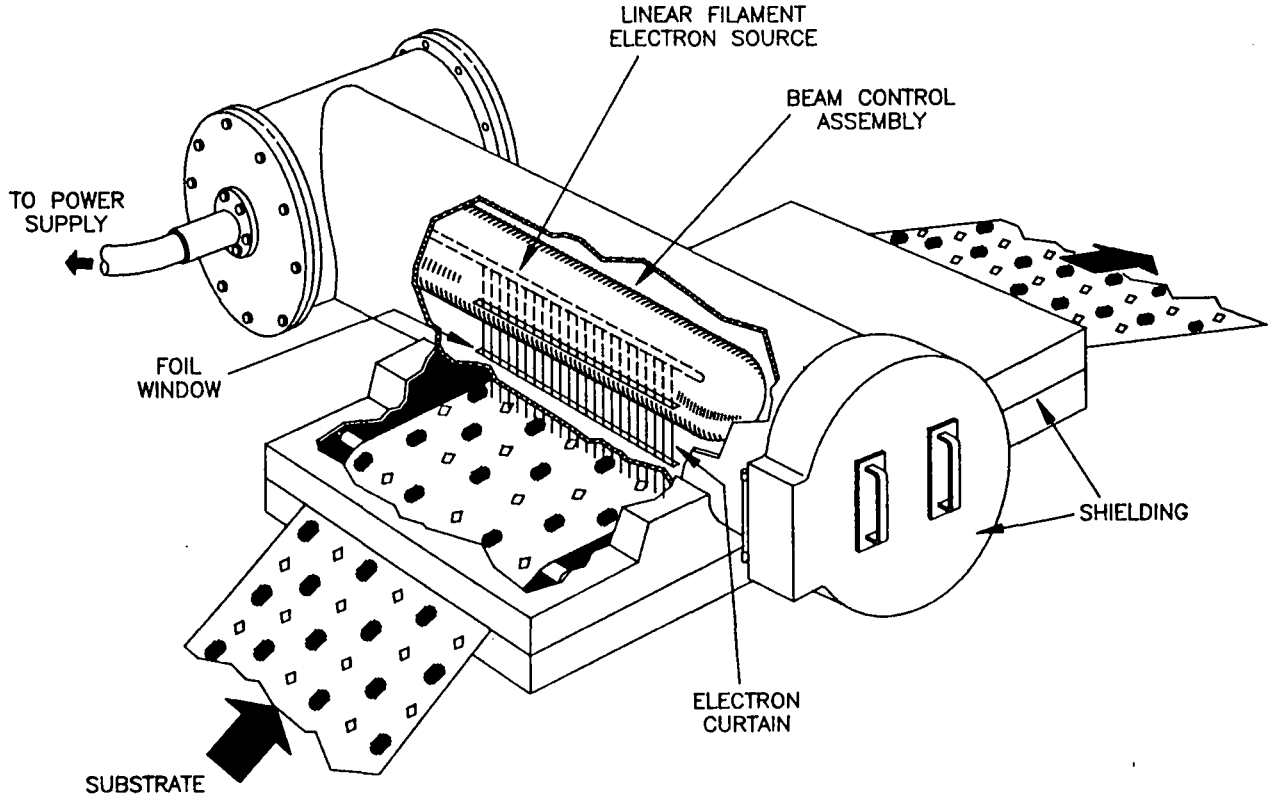

Figure 3-3. Curtain type electron processor.
(Reprinted with permission from Nablo, Sam V. and E.P. Tripp III. "Electron Curing of Coatings and Adhesives," ***Hot Melts-An Overview for Management.*** **1979.)**

Radiation-curable hot melts are hot melts which crosslink when exposed to radiation such as UV light and electron beams. Radiation-curable hot melts have been developed with acrylics, SIS, and SBS resins. These adhesives exhibit properties of high solvent resistance and high shear strength at elevated temperatures comparable to those of solvent-based adhesives.

3.1.5 Product Performance

The use of radiation-curable laminating adhesives has allowed the coating of substrates which have previously been unusable. Substrates such as plastics can now be coated with EB-curable and UV-curable adhesives which provide high bond strengths at low adhesive weights. Although no EB-curable adhesive lines are in commercial operation in the United States, tests have been conducted to evaluate and compare the performance of EB-laminating adhesives with those of solvent and standard hot-melt adhesives. Laboratory tests were conducted comparing peel and shear properties of radiation-curable, solvent-based, hot melt, and silicone-based adhesives. Table 3-1 presents a summary of one study.[3]

3.1.6 Emissions and Wastes

In general, UV-curable and EB-curable coatings do not contain solvents. The absence of solvents completely alleviates VOC emissions to the air from the application and curing process. The EB systems use nitrogen (N_2) to inert the curing area and prevent ozone emissions. In addition, the EB- and UV-curing processes do not create any hazardous waste.

Both UV-curable and EB-curable coatings are considered solid waste before and after curing since the ingredients are 100 percent solids. Due to the size of the UV and EB machinery, less solid waste is created since less make ready substrate, used to thread through the lines prior to beginning the coating process, is needed. Also, both UV and EB systems can coat the substrate to the edge, thus creating less slitter waste from the edges. Recycled paper can also be used in the radiation-curing process but not in traditional solvent systems.[4]

TABLE 3-1. COMPARISON OF UV/EB LAMINATING ADHESIVES WITH OTHER SYSTEMS

Type/ Characteristics	UV/EB	Epoxy Based	Polyurethane Based	Silicone Based	Rubber Based	Hot Melt
Curing Method	Radiation, One-Component	Acid-based Catalyst, Two-parts	Moisture/ Amine, Two-parts	Heat/ Catalyst, One or two Parts	Heat/ Pressure Solvent-based	Heat, one-component
Curing Condition	RT, fast	RT-350°F (177°C), slow, need post cure for ultimate performance, need thorough mixing	RT-200°F (93°C), slow, post cure occurs	RT-300°F (149°C), slow, post cure occurs	RT-250°F (121°C), slow, post cure	Exceed melt point of the base polymer, slow
Adhesion Properties and Comment	Good/ Excellent	Good/ Excellent; Peel strength low; adhesion to plastics weak	Good/ Excellent	Fair/ Good; Peel and shear strengths low, adhesion to organic substrates weak	Fair/ Good	Good; Loss of strength at elevated temperatures, tend to be brittle at low temperatures
Chemical Resistance	Excellent	Excellent	Excellent	Excellent	Poor	Poor
Heat Resistance	Good	Excellent	Good	Excellent	Fair	Poor

RT - residence time & temperature
Source: Reference 3

Another source of emissions and waste is from equipment cleaning. Solvent-based coating spills are usually cleaned with a solvent-type cleaner. Radiation-cured coatings can be removed with less polluting methods.

Spills and overflows of the radiation-curable coatings from the dam can be cleaned with a dry rag, industrial strength soap, or isopropyl alcohol (IPA), a minimally toxic solvent. The solvents used in the coating and cleanup of conventional solvent-based adhesives present a toxicity threat which the radiation-curing process does not pose.[3] The radiation-curable coatings do have the potential to cause skin irritation, which can be prevented by wearing the proper protective safety equipment.

3.2 COSTS

3.2.1 General

One of the many aspects of investigating alternative technologies is the cost difference between the conventional and alternative technologies. Four primary areas were evaluated as part of this study: materials, equipment, operations and maintenance, and energy costs. The information provided was received from several sources and, thus, should be used only as a guide.

3.2.2 Materials

In order to compare the raw material costs for both solvent-based and radiation-curable processes, several factors must remain constant. The substrate (*i.e.*, paper, foil, film) cost remains the same because no new substrates are required to be developed. Line speeds and coating thickness (*i.e.*, a 1 mil thick coating after curing) also must be considered constant for this comparison. The cost for the coatings applied to the substrate is the variable examined. All PSA products have both a release and adhesive coating. Pressure-sensitive release coatings for the three (*i.e.*, UV-curable, EB-curable, and solvent-based) types of coatings vary according to formulation. Solvent-based release coatings (30 to 50 percent solids, 50 to 70 percent solvent) and adhesives (30 to 60 percent solids, 40 to 70 percent solvent) were reported to sell for approximately $1.50 to $1.90 per wet

pound.[7] Liquid UV-curable release coatings and adhesives (100 percent solids) were reported to sell for approximately $3.00 to $5.00 per pound and $4.00 to $6.00 per pound respectively. Of that $3.00 to $5.00, it was estimated that approximately 25 to 50 percent of the UV-curable adhesive costs are for the photoinitiator.[8] The EB-curable release and hot-melt adhesive (100 percent solids) coatings were reported to sell for approximately $10.00 per pound and $1.50 to $2.00 per pound respectively.[1,9,10]

Another study provided a comparison of costs for thermal and EB-curable adhesives in Europe. Some European companies are currently using EB technology in commercial adhesives applications. The study compared a 60 percent solids, 40 percent solvent adhesive to a 100 percent solids hot melt and 100 percent solids low-melt EB-curable adhesive. During the manufacturing of the product, a 0.008 lb/ft^2 [41 gram per square meter (gsm)] wet coating of the 60/40 adhesive was applied to obtain a 0.005 lb/ft^2 (25 gsm) dry coating. The adhesive costs approximately $1.50 per pound. The study estimated the cost to be approximately $0.13 per square yard to use the 60/40 solvent-based adhesive. The 100 percent solids EB-curable rubber hot melt adhesive cost approximately $2.30 per pound. This corresponds to a cost of $0.12 per square yard with a 0.005 lb/ft^2 (25 gsm) coating. The EB-curable low-melt costs approximately $3.00 per pound, making a square yard of product cost approximately $0.22 to produce at 0.005 lb/ft^2 (25 gsm).[10]

3.2.3 Equipment

Pressure-sensitive coating application equipment can range in performance, price, and size. No data have been established for costs associated with a manufacturer of EB-cured adhesive coated and laminated substrates because no company in the United States uses EB technology for commercial production. The equipment costs discussed below represent a comparison between the types of coated and laminated adhesive curing mechanisms. These figures compared systems which cure a 60 inch wide substrate at lines speeds of 600 fpm. A solvent-based thermal adhesive dryer was estimated to cost approximately $1.1 million while an EB adhesive curing "turn-key" system was quoted at $750,000.[4] Waterbased adhesive system dryer costs were estimated at $600,000 while a hot melt chill roller with the chiller system costs approximately $30,000.[12,13]

TABLE 3-2. EQUIPMENT COST SUMMARY (in 1993 $)

	Silicone Coater & Drive	Adhesive Coater & Drive	Silicone Coat Dry/Cure	P.S. Coat Dry/Cure
Waterbased silicones	235,000		600,000	
Solvent-based silicones	235,000		700,000	
100% solids - Thermal cure			475,000	
Five-roll coater	350,000			
Offset-gravure coater	300,000			
100% solids - EB-curable			750,000	
Five-roll coater	350,000			
Offset-gravure coater	300,000			
Solvent-based adhesives		400,000		
Hot melt for EB		360,000		
EB-curable system for hot melt adhesive				750,000
Dryer system for solvent-based adhesives - 120 feet (36.6 m) and 5 zone, with incinerator				1,100,000

Source: Reference 4

A supplier of coating machinery was contacted regarding the cost associated with PSA lines. Table 3-2 summarizes the costs provided for different methods and machinery of PSA equipment.[4] The equipment costs are based on machinery which will coat a 60 inch (152.4 cm) wide substrate, running approximately 600 feet (182.9 m) per minute (fpm).[12]

3.2.4 Operating and Maintenance Costs

Operating and maintenance (O&M) costs occur for all types of coating lines. The thermal system's maintenance cost was estimated to be approximately $2,500 per year for approximately 6,000 hours of operation. For the thermal lines, dryer conveyors and heating mechanisms are the primary operating and maintenance cost items. EB and UV systems were estimated to cost approximately $2,000 and between $6,000 to $8,000 per year respectively for operating and maintenance. EB machinery maintenance primarily involves replacing the windows which expose the substrate to electrons. The UV system's maintenance costs consist predominantly of replacing the lamp system. These estimates are based on the opinions of EB-curing, UV-curing, and thermal equipment manufacturers.[4] The printing study showed amortized (*i.e.*, 7 years, 6,000 hours of operation per year) maintenance costs for thermal, EB-curing, and UV-curing of $0.16, $0.45, and $7.00 per hour respectively.[11]

The operating costs data comparison for thermal, EB, and UV PSA lines were not available at this time. However, the offset printing line study will be used to show a comparison of coating equipment factor costs for the three curing methods. Table 3-3 provides a short summary of raw material, waste, and operating costs.[11]

TABLE 3-3. SUMMARY OF PRINTING COSTS

Drying Type	Ink Cost $/lb	Varnish Cost $/lb	4% Thermal Waste	Total Hourly Costs
Thermal	$2.50	$3.33	$283	$1,148
Electron Beam	$7.50	$2.40	$0	$1,104
Ultraviolet	$7.85	$3.25	$0	$1,189

Source: Reference 3

3.2.5 Energy

Because there is not a commercial PSA EB-curing production line in operation, the results of the printing study will also be used as a comparison of energy cost for thermal, EB, and UV operations. The energy costs were amortized over several years at 6,000 hours of operation per year. Table 3-4 summarizes the energy cost for the print line.

TABLE 3-4. SUMMARY OF PRINTING STUDY ENERGY COSTS

Cost Factors	Thermal Line	EB-Curing System	UV-Curing System
Electricity	$25.39	$6.46	$36.75
Natural gas	$18.16		
Nitrogen		$15.20	
Total Hourly Costs	$43.55	$21.66	$36.75
Full operating time (hrs)	5,500	4,000	4,000
Standby (hrs)	300	500	500
Warm-up (hrs)	200		
Not operating (hrs)*		1,500	1,500
Total Hours	6,000	6,000	6,000

Source: Reference 11
*Not operating (hrs) - The curing mechanisms can be started and shut-down in a matter of minutes therefore less hours of full operation and none for warm-up.

3.3 REFERENCES

1. Presentation by Thomas Hohenwater, Jr., Goldschmidt Chemical Corporation, Hopewell, VA. Energy Sciences Inc. Group Presentation. Wilmington, MA. November 17, 1993.

2. Presentation by Bert Blackwood, Swift Adhesives, Franklin Lakes, NJ. Energy Sciences Inc. Group Presentation. Wilmington, MA. November 17, 1993.

3. Ellerstein, S.M., and Lee, S.A. "UV and EB Curable Laminating Adhesives." 1987 Polymers, Laminations and Coatings Conference. Technical Association of the Pulp and Paper Industry (TAPPI). 1987.

4. Presentation by Frederic S. McIntyre, Energy Sciences Incorporated, Wilmington, MA. Energy Sciences Inc. Group Presentation. Wilmington, MA. November 17, 1993.

5. Walata, Stephen A. and C.R. Newman. *Radiation-Curable Coatings*. EPA-600/2-91-035. (NTIS PB91-219550). U.S. Environmental Protection Agency, Control Technology Center, Research Triangle Park, NC. July 1991.

6. Nablo, Sam V. and E.P. Tripp III. "Electron Curing of Coatings and Adhesives," *Hot Melts-An Overview for Management*. 1979.

7. Telecon. Bennett, Lisa, Environmental Inks and Coatings, Morganton, NC, with Geary McMinn, TRC Environmental Corporation, Chapel Hill, NC. October 14, 1993.

8. Telecon. Orloff, John, National Starch & Chemical, Bridgewater, NJ, with Jill Vitas, TRC Environmental Corporation, Chapel Hill, NC. October 19, 1993.

9. Telecon. Tripp, Ted, Ted Tripp Consulting, Wilmington, MA, with Jill Vitas, TRC Environmental Corporation, Chapel Hill, NC. October 6, 1993.

10. McIntyre, Frederic S. "Environmental Imperatives: Hot Melt Coating & EB Curing," Energy Sciences, Inc. Wilmington, MA. 1993.

11. Newcomb, W.T., and T.J. Menezes. "A Comparison of E-Beam, UV and Thermal Drying for Web Offset Printing," RPC Industries Hayward, CA. No date available.

12. Guenther, Donald C. "Equipment cost estimate," Faustel, Inc. Germantown, WI. 1993.

13. Telecon. Hubbard, Chuck, Black Clawson, Fulton, NY, with William Blake, Jr., TRC Environmental Corporation, Chapel Hill, NC. Cost of Hot Melt Chiller System. January 20, 1994.

CHAPTER 4
TECHNICAL BARRIERS TO RADIATION-CURING

4.1 GENERAL

Reviewing alternative technologies for the coated and laminated substrate manufacturing industry reveals several technical barriers, the greatest of which is the lack of practical, commercial production experience in using UV- or EB-curing systems. Currently, no known large tape and label manufacturers are using radiation-curing for production purposes however, many large facilities are experimenting with radiation curable adhesives. Only proprietary, pilot-scale systems have been tested. This has made it difficult to identify all technical barriers to radiation-curing in the coated and laminated substrate manufacturing industry. However, in discussions with equipment and raw material vendors, some general technical barriers have been identified. These technical barriers can be categorized as follows: equipment suitability, materials availability, product and adhesive performance characteristics, and health and safety issues. Each of these barrier categories will be discussed in this chapter.

4.2 EQUIPMENT SUITABILITY

For this discussion, the important equipment for the coated and laminated substrate manufacturing industry are be broken down into two segments: coating application equipment and curing equipment. All other auxiliary equipment, such as the wind and unwind stations, remain the same regardless of the type of application and curing equipment used.

The application equipment for liquid UV-curable adhesives should be the same as a solvent-based coating system. UV-curable adhesives can be applied by a reverse roll coater, a metering rod coater, or gravure roll coater.[1] Therefore, most tape and label manufacturers would not need to retrofit or replace existing equipment in order to use UV-curable adhesives.

The application equipment for EB-curable adhesives would be a hot melt coating system. Many tape and label manufacturers have a hot melt line at their facility and therefore the addition of

the EB-curing system could be easily accomplished. However, for those facilities that do not have a hot melt line, the equipment necessary to liquify the adhesive would need to be purchased.

The radiation-curing equipment can be easily installed onto an existing thermal system with minimal downtime if enough horizontal (*i.e.*, floor space) is available between the application equipment and the dryers. Several radiation-curing equipment manufacturers have suggested that the equipment can be installed under the thermal dryers if the dryers are elevated approximately 10 feet (3 m) off the ground. If insufficient room exists between the application equipment and the thermal dryer or if the dryer is at ground level, the installation of the radiation-curing equipment will be much more difficult and time consuming, and will require either removing the thermal dryer completely or moving the application equipment to another area.

4.3 MATERIALS AVAILABILITY

At the time of this study, no known facility was commercially producing radiation-cured tapes or labels. This is due in part to the lack of available radiation-curable pressure sensitive adhesives. A few smaller adhesive manufacturing companies have developed potentially applicable adhesives, but have had limited success in presenting these new formulations to the tape and label manufacturers. Several large adhesive manufacturers state that radiation-cured technology is not yet available that will provide the tape and label manufacturers with a radiation-curable adhesive that has the same physical properties as the solvent-based adhesives. However, these same large adhesive coating manufacturers stated that their research and development teams are working on the radiation-curable alternatives, and that the technology will be available within the next two years.

The development of solventless adhesives is a very time consuming process. With each new adhesive developed, the manufacturer must ensure that each hazardous component of the adhesive is registered under the Toxic Substances Control Act (TSCA). The TSCA registration process can be very time consuming and costly.[2] In some cases, the registration process can take up to three years.

In addition to the need for development of radiation-curable adhesives with the same physical properties as the solvent-based adhesives, the release coatings will need to be reformulated to be compatible with the new adhesives. As with adhesives, each new release coat component must be

TSCA registered. The increased tack associated with EB-curable adhesives makes the release coating a very important part of the tape and label manufacturing process. It is critical that the release coat allow for a smooth release of the tape or label, or consumer satisfaction may be affected. A further discussion of physical properties is included in the following section.

4.4 PRODUCT AND ADHESIVE PERFORMANCE CHARACTERISTICS

As discussed in Section 3.1.5 of this report, the physical properties of the radiation-curable adhesives are some of the most difficult barriers to overcome. The solvent-based adhesives have very specific properties that have been established as "standard" properties (*i.e.*, color, lack of clarity) that consumers believe are critical to the tape or label and its end-use. Until recently, radiation-curable adhesives did not have those standard properties.

Liquid UV-curable adhesives, while less costly than solvent-based adhesives, lack many of the physical properties of solvent-based adhesives. One such property is the cure window or the time period during which the adhesive can be properly cured. The cure window for liquid UV-curable adhesives is short, therefore, the adhesive can be undercured or overcured very easily. This curing problem can lead to poor tack and increased creep (wrinkling). Other properties that have prevented liquid UV-curable adhesives from being considered as alternatives to the solvent-based adhesives include: increased viscosity, making the adhesive difficult to apply with conventional application equipment; residual odors from the undercured adhesive; and appearance problems.[3] The problems associated with the UV-curable adhesives led to the creation of the EB-curable products. Hot melt/EB-curable adhesives do not possess many of the problems that UV-curables exhibit and offer some advantages over solvent-based formulations such as increased temperature and chemical resistance. This makes them attractive for some high performance applications.

Due to the lack of known commercial application of either of these radiation-curable technologies, it is difficult to discuss aesthetic properties of these products. However, it is important to mention that in discussions with marketing representatives from the tape and label companies, aesthetics are very important to their customers. Poor perception of a low-VOC product which does not look or feel like a solvent-based product, even though the low-VOC product may actually perform better, may lead to lack of market acceptability. This could be a considerable barrier.

4.5 HEALTH AND SAFETY ISSUES

In general, health and safety concerns are evident when using radiation technologies. Even though radiation-curable adhesives would be handled in the same manner as solvent-based adhesives, with the use of gloves and eye protection at all times, facilities still question effects on workers' health. There is the potential for skin to become sensitized to the adhesives, if the coating is not washed off quickly.

In addition, through recent advances in monomer chemistry, the health and safety hazards associated with radiation-curable coatings have decreased significantly. The monomers have a high molecular weight which reduces the volatility and removes almost any danger associated with vapor inhalation. There continues to be concerns with skin becoming sensitized when in direct contact with the radiation-curable coatings, and workers are still required to wear appropriate personal protective equipment when handling these materials.[4]

There is a concern with the use of a radiation-cured product that residual monomers may remain in the product. Several tape and label manufacturers have expressed a concern that consumers may attempt to file a law suit against the manufacturers for being exposed to these residual monomers. The manufacturers would like to minimize the risk to their companies by having EPA establish a level of residual monomer that can remain in the product and the product can be considered "safe."[5]

4.6 REFERENCES

1. Presentation by Richard Greer, Faustel. CMM International, Chicago, IL. Coating Technologies/Methods. August 31, 1993.

2. Memorandum. Hohenwater, Tom, Goldschmidt Chemical Corporation, Hopewell, VA, to Beth McMinn, TRC Environmental Corporation, Chapel Hill, NC. Toxic Substances Control Act Review. November 22, 1993.

3. Telecon. Ted Tripp, Ted Tripp Consulting, Wilmington, MA, with Jill Vitas, TRC Environmental Corporation, Chapel Hill, NC. Discussion of barriers to radiation-curable adhesives. October 6, 1993.

4. Memorandum. Ross, Alexander, Rad Tech International North America, Falls Church, VA to Beth McMinn, TRC Environmental Corporation, Chapel Hill, NC. Comments on Health and Safety Issues Associated with Radiation-curable Coatings. March 4, 1994.

5. Presentation by Jill Vitas, TRC Environmental Corporation. RadTech International, Orlando, FL. Barriers to Radiation-Curable Coatings in the Coated and Laminated Substrate Manufacturing Industry. Comment made during presentation by George Moses, Avery Dennison, Pasedena, CA. May 2, 1994.

CHAPTER 5

ECONOMIC BARRIERS TO RADIATION-CURING

5.1 GENERAL

In addition to the technical barriers described in Chapter 4, coated and laminated substrate manufacturers must evaluate the economics associated with making significant raw material and process changes. This section discusses the economic barriers to using radiation-curable adhesives including capital investment, pricing pressure, payback periods, and operating costs. Due to the lack of known production facilities using liquid UV-curable adhesives, this chapter focuses on the EB-curable adhesive systems.

5.2 CAPITAL INVESTMENT FOR NEW SYSTEMS

A comparison of thermal (solvent-based) and EB-curing technology must examine the capital investment costs for new equipment. The costs reported below were provided by a supplier of both EB-curing and thermal machinery. For a 60-inch (152.4 cm) wide substrate and lines speeds of 600 fpm (182.9 meters per minute), the EB machinery plus a hot melt chill roller with the chiller system is less expensive than the new thermal equipment without control equipment. In terms of retrofit, a facility would need to add an EB-curing mechanism, listed at approximately $750,000 each for each coating line. Assuming the facility already has a hot melt adhesive system and release coating equipment in place, additional add-on costs for a retrofit would be minimal.[1]

Cost in dollars for a new solvent-based system:

Solvent-based silicone release coater and drive -	235,000
Solvent-based silicone adhesive coater and drive -	400,000
Solvent-based silicone release coat dry/cure system -	700,000
Dryer system for solvent-based silicone adhesives; 120 ft. (36.6 m) 5 zone -	1,100,000
Subtotal	2,435,000
Installation (22 percent of subtotal)	535,700
Grand Total for installed solvent based system	2,970,700

Cost in dollars for a new EB-cured system:

EB - 100 percent solids five-roll release coater -	350,000
EB - hot melt adhesive coater (drum unloader/melter) -	360,000
EB - release curing system -	750,000
EB - curing system for hot melt adhesive -	750,000
Subtotal	2,210,000
Installation (22 percent of subtotal)	486,200
Grand Total for EB-curing system with installation	2,696,200

5.3 PRICING PRESSURE

The profit margin for many PSA products is very low, pennies per square foot. Because of the low profit margins, facilities must consider the effect of environmental regulations on product costs. Upcoming environmental regulations may effect a facility's emission requirements, requiring them to reduce, control, or eliminate many of their solvent emissions, pay large fines, or close the facility. Additionally, the cost for maintaining and operating emission control devices and following recordkeeping requirements may be substantial. These costs will cause the price of PSA products to increase. These costs could be avoided if reasonable alternative technologies could be obtained. Alternative technologies must not only address the production issue and be affordably priced, but provide fewer emission problems than a solvent-based system.

5.4 PAYBACK PERIOD FOR RETROFIT SYSTEMS

In order to compare the costs for a single-line solvent-based system and an EB-curing system, several assumptions must be made: the coating head/area will not be significantly altered, substrate types will not change, the dryer will not be used with the EB-curing system, and the radiation-curing equipment will be retrofitted to the present coater. EB-curable and solvent-based facilities will also incur environmental compliance costs to dispose of their solid and hazardous waste. Assuming an industrial tipping fee of $39.50/ton of waste, total waste production of 6,000 square yards (5,016 square meters) per day, average thickness of mixed coated and uncoated waste equal to 1.8 mil, and a density of waste equal to 62.4 lbs per cubic foot (1,000 kg/m^3), a total of $3,500 is spent annually

on solid waste at a solvent-based facility while the EB-curable facility would spend approximately five percent of this amount totaling $170.[3] The solvent-based line generates approximately 25 drums of waste annually. Assuming a hazardous waste disposal fee of $450 per drum, a total of $11,250 is spent on hazardous waste annually at the solvent-based facility. EB-curable coatings are considered solids after curing therefore no hazardous waste is generated from production. However, both facilities may have liquid hazardous waste from cleaning the coatings from machinery, etc. The cost to retrofit one solvent-based line to an EB-curing line, and the possible savings, are itemized below.

<u>EB equipment costs:</u>

EB-curable release and adhesive coater curing equipment - $1,500,000
(See Section 5.2 of this chapter)

<u>Solvent-based coating system costs:</u>[2]

1. Energy costs per year - $170,000
(natural gas fired oven, 6,000 hours of operation)

2. Solid waste (*e.g.*,makeready, raw material) costs per year - $3,500

$$\frac{6{,}000\ \text{yds}^2}{\text{day}} \times \frac{350\ \text{day}}{\text{yr}} \times \frac{(3\ \text{ft})^2}{\text{yds}^2} \times 0.0018\ \text{in} \times \frac{\text{ft}}{12\ \text{in}} = 2{,}835\ \frac{\text{ft}^3}{\text{yr}} \tag{5.1}$$

$$\frac{62.4\ \text{lbs}}{\text{ft}^3} \times \frac{\text{ton}}{2{,}000\ \text{lbs}} \times \frac{\$39.50}{\text{ton}} \quad \frac{\$1.23}{\text{ft}^3} \tag{5.2}$$

$$2{,}835\ \frac{\text{ft}^3}{\text{yr}} \times \frac{\$1.23}{\text{ft}^3} = \$3{,}500 \tag{5.3}$$

3. Hazardous waste costs per year - $11,250

$$\frac{25\ \text{drums}}{\text{year}} \times \frac{\$450}{\text{drum}} = \frac{\$11{,}250}{\text{year}} \tag{5.4}$$

4. Air emission costs per year - $44,000
(Solvent lost from: Process - 290,000 lbs * 7.25 lbs/gal=40,000 gal)
(Toluene - $1.10/gal.[4])

$$290{,}000\ \text{lbs} \times \frac{1\ \text{gal}}{7.25\ \text{lbs}} \times \frac{\$1.10}{\text{gal}} = \$44{,}000 \tag{5.5}$$

5. Engineer/environmental regulatory savings - $15,000
(One-half of one environmental person's time saved[5])

$$0.5 \text{ employees} \times \frac{\$29{,}300}{\text{employee}} = \$15{,}000 \tag{5.6}$$

EB-curable coating system costs:

1. Energy costs per year - $87,000
   (Electricity - $25,840; Nitrogen - $60,800)

2. Solid waste per year - $170

$$\frac{88 \text{ tons waste}}{\text{year}} \times 0.05 \times \frac{\$39.50}{\text{ton fee}} = \$174 \tag{5.7}$$

3. Hazardous waste costs per year - $0

4. Additional costs incurred - $35,000
   (N_2 system - 28,000 scf tank, $25,000;
   installation, $5,000; piping, $5,000)

Dollars saved by using EB-curing system per year:

		Previous	Current	Savings
1.	Energy	$170,000	$87,000	$83,000
2.	Solid waste	$3,500	$170	3,300
3.	Hazardous waste	$11,000	$0	11,000
4.	Air emissions (lost solvent)	$44,000	$0	44,000
5.	Other costs/savings (1st yr)	$15,000	$30,000	-15,000

Savings per year to switch to EB-curing - $126,000

Using the savings per year from switching to the EB-curing equipment, and the cost for the solvent-based release and adhesive coating lines, at a discount rate of 2.1 percent, the net present value theory estimates that approximately 11 years would be required to recover the capital costs of the EB investment. This assumes the cost per coated area for both coatings is equal.

Additional savings such as reduced maintenance, floor space saved for other uses, lower shipping costs for solid materials, and less clean-up time for EB-curable coatings should also be considered in the examination of EB-curing system implementation costs and savings.

5.5 OPERATING COSTS

Actual operating costs for radiation-curable PSA applications are not available as no known facility in the United States is using this technology commercially. However, as described in Section 3.2.4, operating and maintenance costs for an EB-curing system are lower than conventional thermal systems.

5.6 REFERENCES

1. Guenther, Donald C. "Equipment cost estimate," Faustel, Inc, Germantown, WI. 1993.

2. Newcomb, W.T., and T.J. Menezes. "A Comparison of E-Beam, UV and Thermal Drying for Web Offset Printing," RPC Industries, Hayward, CA. No date available.

3. Telecon. Representative of Durham County Landfill, Durham, NC with William L. Blake, Jr., TRC Environmental Corporation, Chapel Hill, NC. December 1993.

4. "The Markets," *American Paint and Coatings Journal*. **78**(17): pp. 23,24. 1994.

5. *Statistical Abstracts of the U.S. 1993*. U.S. Department of Commerce, Bureau of the Census, pp. 575, 742.

CHAPTER 6
EDUCATIONAL BARRIERS TO RADIATION CURING

6.1 GENERAL

The final category of barriers considered was educational barriers. This chapter divides educational barriers into two broad categories: management barriers and employee training barriers.

6.2 MANAGEMENT AWARENESS

Management at PSA facilities expressed concern about radiation-curing technology cost, performance, and productivity. Significantly high initial costs are a major issue for PSA facilities. However, the cost and pricing information provided in this document illustrates that the newly installed cost of radiation-curing equipment should approximate those of new thermal-curing machinery without control equipment. The productivity of the radiation equipment exceeds that of the present thermal system due to the speed of cure available for most substrates, allowing faster line speeds. This increased productivity leads to lower cost which equates to higher profits. It is important that industrial managers be aware of the current technology advances in radiation curing and that they are aware of the associated long term costs and benefits.

6.3 EMPLOYEE TRAINING

The two main concerns expressed by employees regarding handling radiation-curable systems were coating and radiation safety. Employees must be trained to properly handle these coatings. Radiation-curable coatings are non-hazardous, however, they can cause allergic responses if allowed to contact a person's skin for a prolonged period of time. The coating manufacturers contacted for this project provide customers with employee training (*i.e.*, safe handling practices, protective equipment, cleaning) concerning radiation-curable coatings. The most significant fear employees expressed was association with the word "radiation." The

alternative technologies are cured by radiation beams. Both UV and EB equipment suppliers have created methods to harness the radiation energy and safely apply it to a coating. The EB equipment, as shown in Figure 3-1, has shielding, control windows to direct the electron beams, and radiation leak detection equipment to guard against problems with the system and protect employees against possible radiation exposure. Nitrogen inerting is used to avoid creating ozone from the process, when the system operates above 1,600 feet per minute, and prevents ozone from escaping to the atmosphere. Employees who use the radiation-curing equipment must be instructed on its proper use.

CHAPTER 7
DESCRIPTION OF ALTERNATIVE TECHNOLOGIES

7.1 GENERAL

An alternative to solvent-based adhesives is hot melt adhesives. Currently, hot melt adhesives are estimated to account for 22 percent of the total adhesive consumption in the United States as measured by dry adhesive weight.[1] Hot melt adhesives are different from solvent-based adhesives in that hot melt adhesives are not dissolved in solvents. Instead, hot melt adhesives are solids which are heated to their melting point and applied to the substrate in their liquid state. Hot melt adhesives have been used in a variety of different applications which include bookbinding, product assembly, box and carton sealing, and pressure sensitive tapes.

Some manufacturers estimate that hot melt adhesives account for almost 100 percent of the adhesives used by the bookbinding and the box and carton sealing industries, which have been dominated by hot melt adhesives because these adhesives are capable of quick line speeds and cure.

7.2 PROCESSES

7.2.1 Raw Materials

Unlike the solvent-based adhesives which are formed primarily from natural rubbers, hot melt adhesives are composed of high molecular weight polymers which are thermoplastic in nature. The most commonly used polymers for hot melt pressure sensitive adhesive applications include ethylene vinyl acetate (EVA), styrene-isoprene-styrene (SIS), and styrene-butadiene-styrene (SBS). By themselves, these polymers do not exhibit the full range of performance characteristics required for the product's end use. As a result, a variety of tackifying resins, waxes, antioxidants, plasticizers, and other materials are added to the adhesive formulation in order to enhance the polymer performance. Table 7-1 lists some of the commonly used hot melt adhesive ingredients.[2]

TABLE 7-1. COMMONLY USED RAW MATERIALS IN HOT MELT ADHESIVES

Base Material	Reactive Hot Melt Adhesives	Tackifiers	Waxes	Misc.
acid copolymers	epoxy	styrene resins	paraffins	antioxidants
amorphous polyolefins	polyester	styrene copolymer resins	microcrystallines	plasticizers
olefin/butyl rubber	polyurethane	α-pinene resins	oxidized microcrystallines	fillers
ethylene/acrylic copolymers		β-pinene resins	synthetics	foaming agents
ethylene/vinyl acetate copolymers		dipentene resins	oxidized synthetics	stabilizers
ethylene terpolymers		hydrogenated rosins	ester waxes	
polyacrylic		esterified rosins	polyethylene wax	
polyamide		C-5 hydrocarbon resins		
polyisobutylene		C-9 hydrocarbon resins		
polyester		phenolic resins		
polystyrene		aromatic (coal tar) resins		
polyvinyl acetate		terpene phenolic resins		
polyvinyl butyryl		paraffinic oils		
polyethylene		naphthenic oils		
styrene block copolymers		courmarone indene resins		
		polybutenes		

Source: Reference 2

The standard hot melt formulations suffer from poor solvent resistance, poor shear strength at elevated temperatures, and lack of clarity. As a result, new formulations have been developed to overcome these deficiencies. These new hot melt technologies include acrylic hot melts, radiation-curable hot melts, reactive hot melts, and epoxies.

Acrylic hot melts are being developed through a technique called grafting. In this process, catalysts are used to create polymer combinations that would not otherwise form. Grafted acrylic hot melts have excellent clarity and stability but poor shear resistance at elevated temperatures. This difficulty, however, has been overcome with radiation-curable hot melt technology.

Other new technologies are reactive hot melts and epoxies. Both reactive hot melts and epoxies have high solvent resistance and high shear strength comparable to those of solvent-based adhesives. The main components in reactive hot melts and epoxies are polyesters and polyurethanes. These compounds form bonds when they are combined and react with one another. In the case of some polyurethane formulations, the polyurethane will undergo a chemical reaction when exposed to moisture, often called a moisture-curing hot melt. The resulting compound has high shear strength at elevated temperature and high solvent resistance.

7.2.2 Equipment

The four main pieces of equipment used in the hot melt coating process include the following:

1. Heated Mixing Tank
2. Heated Storage Tank
3. Hot Melt Coater
4. Slitter

Mixers used in the hot melt application are identical to those used in solvent-based systems except that they have jackets which provide heat to melt the adhesive materials. The storage tank for hot melt is identical to the solvent-based adhesive storage tanks except that heat has been added to keep the hot melt in its molten state. The hot melt coater consists of an unwind station, a release coating station, an adhesive coating station, a chilled roller, and a rewind station. The coating stations are typically slot die or roll coater. The slot die coaters have heated lips, while

the roll coaters have heated metering and applicator rollers. In the case of reactive hot melts, the slot die coater is usually used because it is enclosed and better protects the adhesive from elements (*e.g.*, moisture) which might cause the adhesive to degrade or cure prematurely. In some instances, the reactive hot melt requires an inerted coating head because the coating is extremely sensitive to environmental exposure during application. The final piece of equipment is the slitter, which is identical to those used with solvent systems.

7.2.3 Physical Process

As with the solvent-based coating facilities, many hot melt coaters formulate their own adhesives. However, in the hot melt line, the mixers must be heated to melt the compounds to be blended. The storage tanks in the hot melt line must also be heated to keep the adhesive in its molten state.

Unlike the solvent-based storage tanks, the hot melt tanks must be carefully sized to prevent charring. Charring occurs when the adhesive has been heated too long and begins to decompose and turn to carbon. If the tank is too large, the hot melt holding time will be too long, and the hot melt will begin to char. If the tank is too small, the hot melt material that clings to the sides of the tank will char. To compensate for charring and other contaminants (*e.g.*, dirt or metal shavings) which may contaminate the storage tank, a filter is placed in the delivery system between the tank and the coating head.

Manufacturers who do not formulate their own adhesive do not require the heated storage tank and heated mix tanks. Instead, they can feed the adhesive directly into the coater. If the hot melt is in pellet form, it is fed into a hopper which regulates the flow of adhesive to the coating head. In other configurations, the hot melt is placed in a drum, which is attached to the coating head. A heated plate is placed on top of the drum or a heated rod is placed in the drum, melting the adhesive and allowing it to flow into the coating head.

Once the hot melt is molten, the substrate is unwound and coated at speeds of 50 to 2,500 fpm (15 - 760 m per minute). The typical hot melt line operates at a speed of 1800 fpm (550 m per minute). The hot melt coater is usually a roll coater or a slot die coater capable of handling viscosities in the range of 5 to 200 centipoise. The substrate is then rewound and sent to the slitter. No drying ovens are needed in the hot melt process because hot melts are 100 percent

solids which cure upon cooling. Solvent-based adhesives average 40 percent solids and 60 percent solvent. Before the product can be rewound, the solvent vehicle must be removed via drying. Moreover, the hot melt system does not need a solvent recovery system because solvents are not used.

7.2.4 Product Outputs

Hot melt adhesives have been restricted to some of the lower performance commodity areas such as labels, carpet tapes, and some lower performance masking and duct tapes. Expanded use of hot melts has been limited by the coatings' low solvent resistance, low shear strength at elevated temperatures, and darker color. The development of acrylic and reactive hot melt adhesives is eliminating these performance deficiencies and is allowing hot melt to penetrate more markets.

7.2.5 Emissions and Wastes

Unlike the solvent-based coating lines, hot melt adhesive coating lines do not generate any VOC emissions during the coating process because hot melt adhesives do not require solvents or any other vehicle to transfer the adhesive to the substrate. Both hot melt and solvent systems will generate several tons of solid waste, such as slitting ends and defective product, which are considered non-hazardous and can be disposed of in a municipal landfill. In addition, hot melt facilities may generate some hazardous waste because mineral spirits, toluene, or another solvent may be used to clean and remove adhesive from the equipment. On average, however, the quantity of solvent generated from cleaning operations for hot melts is small [*e.g.*, less than 200 gallons (0.757 m^3) per year] when compared with the quantity of waste solvent generated by solvent-based coating lines [*e.g.*, 8,000 gallons (30 m^3) per year].

7.3 COSTS

7.3.1 Materials

The cost per pound of solvent-based adhesive is about three quarters as much as hot melt adhesives. However, most solvent-based adhesives average 40 percent solids, whereas hot melt adhesives are 100 percent solids. Therefore, more solvent-based adhesive must be applied to achieve equal coating thickness. A more accurate price comparison is the applied cost or the dry cost of the adhesive. When comparing the dry adhesive costs, hot melt adhesives are less expensive than solvent-based adhesives. Table 7-2 presents some typical hot melt and solvent-based adhesive prices.

TABLE 7-2. ADHESIVE PRICES

Adhesive Type	Price ($/wet pound)	Price ($/dry pound)
Solvent-based	1.50-1.90	3.75-4.75
Conventional Hot Melt	N/A	1.25-2.00

Source: References 3 and 4

The cost of adhesives greatly influences the annual profits of a coater. Assuming a production rate of 239,000 square yards (200,000 square meters) per day, 350 operating days per year, an adhesive density of 69 lbs per cubic foot (1,105 kg per cubic meter), and a 1 mil dry coating thickness, a hot melt coating at a price of $2.00 per pound will cost the coater $8.7 million annually (Equation 7.3). A 40 percent solids solvent-based adhesive priced at $1.50 per pound will cost the coater $16.2 million annually (Equation 7.6).

Hot Melt Adhesive Cost:

$$\frac{239{,}000\text{yds}^2}{\text{day}} \times \frac{350\text{day}}{\text{yr}} \times \frac{(3\text{ft})^2}{\text{yd}^2} \times \frac{0.001\text{ in}}{1\text{ mil}} \times 1\text{ mil} \times \frac{\text{ft}}{12\text{ in}} = \frac{752{,}850\text{ ft}^3}{\text{yr}} \tag{7.1}$$

$$\frac{69\text{ lb}}{\text{ft}^3} \times \frac{\$2.00}{\text{lb coating}} \times \frac{1\text{ lb coating}}{1\text{ lb adhesive}} = \frac{\$138}{\text{ft}^3} \tag{7.2}$$

$$\frac{752{,}850\text{ ft}^3}{\text{yr}} \times \frac{\$138}{\text{ft}^3} = \$8{,}700{,}000/\text{yr} \tag{7.3}$$

Solvent-Based Adhesive Cost:

$$\frac{239{,}000\ \text{yds}^2}{\text{day}} \times \frac{350\ \text{day}}{\text{yr}} \times \frac{(3\text{ft})^2}{\text{yd}^2} \times \frac{0.001\ \text{in}}{1\ \text{mil}} \times 1\ \text{mil} \times \frac{\text{ft}}{12\ \text{in}} = \frac{752{,}850\ \text{ft}^3}{\text{yr}} \tag{7.4}$$

$$\frac{69\ \text{lb}}{\text{ft}^3} \times \frac{\$1.50}{\text{lb coating}} \times \frac{1\ \text{lb coating}}{0.4\ \text{lb adhesive}} = \$258.75/\text{yr} \tag{7.5}$$

$$\frac{752{,}850\ \text{ft}^3}{\text{yr}} \times \frac{\$258.75}{\text{yr}} = \$16{,}200{,}000 \tag{7.6}$$

7.3.2 Equipment

Equipment costs of hot melt systems are substantially less than solvent-based systems. Hot melt adhesive coaters are approximately the same price as the solvent-based coaters, but the hot melt systems do not require the additional expensive of operating dryers or the solvent recovery/incineration equipment. As a result, the hot melt systems cost about 50 to 70 percent less than the solvent-based systems. A typical hot melt coating line, capable of operating at speeds of 600 fpm (183 m per minute) to 1,800 fpm (550 m per minute), costs about $600,000-$700,000.[5-9]

The solvent-based coating equipment, including the dryer and solvent recovery system, costs about $2.4 million. A breakdown of these expenses is presented in Table 7-3. In addition, much less floor space is needed in a hot melt system because the main contributor to the length of the solvent system, the dryer, has been eliminated.

7.3.3 Operating and Maintenance Costs

The operating cost of hot melt coaters is less than the operating cost for solvent coaters for the following five reasons:

1. Fewer employees needed per line
2. Lower freight costs of shipping hot melt coatings
3. Lower inventory costs from ease of storage of hot melt coatings
4. Fewer environmental compliance costs
5. Lower insurance costs

Hot melt lines require fewer employees because the coating equipment requires less floor space. An entire hot melt coating line is about 40 feet (12 m) long, while the solvent coating

TABLE 7-3. EQUIPMENT COSTS

Equipment	Cost (Dollars)
Hot Melt Equipment	
Hot Melt Coater (includes release coater)	600,000-700,000
Total Hot Melt Cost	600,000-700,000
Solvent-Based Equipment	
Release Coater	235,000
Adhesive Coater	400,000
Release Coating Dryer	700,000
Adhesive Coating Dryer with Incinerator	1,100,000
Total Solvent-Based Cost	2,435,000

Source: Reference 9

system is about 150 feet (45 m) long. As a result, hot melt coaters only require one to two people to monitor and maintain them, while a solvent line requires 3 to 4 people because of the length. Assuming an annual income, excluding benefits, for a production operator of $23,100, a hot melt line with two employees has labor costs of $46,200 per year associated with that operation (Equation 7.7). A solvent line requiring four employees has $92,400 in labor costs associated with it (Equation 7.8).[10]

Hot Melt System Labor Costs:

$$2 \text{ employees} \times \frac{\$23,100}{\text{employee}} = \$46,200 \tag{7.7}$$

Solvent-Based System Labor Costs:

$$4 \text{ employees} \times \frac{\$23,100}{\text{employee}} = \$92,400 \tag{7.8}$$

Another cost differential is freight. Freight costs are much less for hot melt systems because of the reduced volume of adhesive that is purchased and shipped. A hot melt facility also has lower inventory costs because short curing times enable the coater to ship product almost

immediately after coating. At a solvent-based adhesive-coating facility, the product is typically kept for several days before it reaches a final cure, increasing the product inventory that must be kept at any one time.

In addition, a hot melt facility has fewer environmental compliance costs because it has minimal environmental concerns. Less money will be spent on permitting fees and disposal fees due to the absence of hazardous materials. Also, less time needs to be spent on environmental compliance at a hot melt facility, reducing an employee's time and possibly eliminating the need for one employee. Based on the average salary, excluding benefits, of $29,300 year at manufacturing facilities, a hot melt coater requires $15,000 per year to have one person working half time on environmental compliance (Equation 7.9). A solvent-based coater spends $29,300 annually to have one person working full time on environmental compliance (Equation 7.10).[10]

Hot melt and solvent-based facilities will also incur environmental compliance costs to dispose of their solid and hazardous waste. Assuming an industrial tipping fee of $39.50/ton of waste, total waste production of 6,000 square yards (5,016 square meters) per day, average thickness of waste is 1.8 mil, and a density of waste substrate equal to 62.4 lbs per cubic feet (1,000 kg/m^3), a total of $3,500 is spent annually on solid waste at both hot melt and solvent-based facilities (Equation 7.11).[11] As discussed earlier (Section 7.2.5), hot melts average two drums of hazardous waste annually, while solvent-based systems generate 25 drums of waste annually. Assuming a hazardous waste disposal fee of $450 per drum, a total of $900 are spent on hazardous waste annually at hot melt facilities (Equation 7.12) and $11,250 are spent at solvent-based facilities (Equation 7.13).

Hot Melt System Environmental Compliance Labor Cost:

$$0.5 \text{ employee} \times \frac{\$29{,}300}{\text{employee}} = \$15{,}000 \tag{7.9}$$

Solvent-Based System Environmental Compliance Labor Cost:

$$1 \text{ employee} \times \frac{\$29{,}300}{\text{employee}} = \$29{,}300 \tag{7.10}$$

Hot Melt System and Solvent-Based System Landfill Cost:

$$\frac{6{,}000\ \text{yds}^2}{\text{day}} \times \frac{350\ \text{day}}{\text{yr}} \times \frac{(3\ \text{ft})^2}{\text{yds}^2} \times 0.0018\ \text{in} \times \frac{\text{ft}}{12\ \text{in}} \times \frac{62.4\ \text{lbs}}{\text{ft}^3} \times \frac{\text{ton}}{2000\ \text{lbs}} \times \frac{\$39.50}{\text{ton}} = \frac{\$3{,}500}{\text{yr}} \tag{7.11}$$

Hot Melt System Hazardous Waste Disposal Cost:

$$\frac{2\ \text{drums}}{\text{year}} \times \frac{\$450}{\text{drum}} = \frac{\$900}{\text{year}} \tag{7.12}$$

Solvent-Based System Hazardous Waste Disposal Cost:

$$\frac{25\ \text{drums}}{\text{year}} \times \frac{\$450}{\text{drum}} = \frac{\$11{,}250}{\text{year}} \tag{7.13}$$

Finally, the insurance costs of the hot melt process are much less than the solvent-based process because the risk associated with solvents has been eliminated in the hot melt process. In the solvent-based system, the insurance underwriter must account for the highly flammable nature of the products being used in the facility, raising the annual premium. No insurance costs were available at the time of this report preparation. Annualized operating costs are summarized in Table 7-4, using the outputs of equations 7.3 through 7.9.

TABLE 7-4. ANNUALIZED OPERATING COSTS

Annual Costs	Solvent System	Hot Melt System
Labor Cost	$92,400	$46,200
Environmental Compliance Labor	$29,300	$15,000
Landfill Costs	$3,500	$3,500
Hazardous Waste Disposal Costs	$11,250	$900

7.3.4 Energy

The energy cost of a hot melt system is also less than a solvent-based system because hot melts do not require drying or solvent recovery. A solvent-based system requires 83,000 BTU to dry 1,000 square feet (93 square meters) of substrate with a 1.5 mil coating thickness of a 40 percent solids solvent-based adhesive.[12] A hot melt system requires only 2,000 BTU to coat and

cure 1,000 square feet (93 square meters) of substrate to a 1.5 mil coating thickness.[12] Table 7-5 lists the energy requirements for both hot melt and solvent-based adhesive coating systems.

TABLE 7-5. ENERGY COSTS

	Solvent-Based System	Hot Melt System
Energy Requirement (BTU/Thousand ft^2)	83,000	2,000
Price/MMBTU	5.49	5.49
Total MMBTU Usage	41,000	1,000
Annual Energy Cost	$230,000	$5,500

Assuming that 239,000 square yards (200,000 square meters) of tape are produced per day with a coating thickness of one mil at a facility that operates 350 days per year, a total of 41,000 MMBTUs are used in a solvent-based system annually and 1,000 MMBTUs are used in a hot melt system. In 1990, the average cost of energy for industrial users was $5.49 per MMBTU. Using this as the price of energy, a total of $230,000 is spent on energy in a solvent system annually (Equation 7.14) and $5,500 is spent on energy in a hot melt system annually (Equation 7.15).

Solvent-Based System Energy Cost:

$$\frac{83{,}000\ \text{BTU}}{1000\ \text{ft}^2} \times \frac{0.001\ \text{in}}{0.0015\ \text{in}} \times \frac{(3\ \text{ft})^2}{\text{yd}^2} \times \frac{239{,}000\ \text{yd}^2}{\text{day}} \times \frac{350\ \text{day}}{\text{yr}} \times \frac{\text{MMBTU}}{10^6\ \text{BTU}} \times \frac{\$5.49}{\text{MMBTU}} = \frac{\$230{,}000}{\text{yr}} \qquad (7.14)$$

Hot Melt System Energy Cost:

$$\frac{2{,}000\ \text{BTU}}{1000\ \text{ft}^2} \times \frac{0.001\ \text{in}}{0.0015\ \text{in}} \times \frac{(3\ \text{ft})^2}{\text{yd}^2} \times \frac{239{,}000\ \text{yd}^2}{\text{day}} \times \frac{350\ \text{day}}{\text{yr}} \times \frac{\text{MMBTU}}{10^6\ \text{BTU}} \times \frac{\$5.49}{\text{MMBTU}} = \frac{\$5{,}500}{\text{yr}} \qquad (7.15)$$

7.4 TECHNICAL BARRIERS TO ALTERNATIVE TECHNOLOGY

Although hot melt adhesives provide several advantages over solvent-based adhesives, such as faster line speeds, lower energy requirements, lower freight costs, and no emissions of VOCs, hot melt adhesives are not widely used in pressure sensitive tapes. The reasons for the low consumption of hot melt adhesives vary depending upon product type, but the most significant reason has been due to product performance limitations.

7.4.1 Equipment Suitability

Even though hot melt coaters are very similar to solvent coaters, converting from solvent-based coatings to hot melt coatings typically requires new equipment because hot melt adhesives have greater viscosities which solvent-based coating application equipment cannot handle. Roll coater configurations could be a problem for hot melt adhesives, especially in the case of reactive hot melts, because in a roll coating system, the hot melt is exposed to the environment for longer periods of time. Reactive hot melts may cure too quickly if exposed to moisture prematurely.

7.4.2 Materials Availability

Low performance hot melt adhesives are readily available. However, the higher performance hot melts are fairly expensive due, in part, to the limited number of suppliers. Coaters often will not buy the adhesive until the price is reduced, and adhesive manufacturers cannot lower the price until they have sufficient demand to warrant mass production. Even if hot melt is more economical, coaters are hesitant to purchase a product when there are only a few suppliers. Coaters fear that the price might increase when demand increases due to the limited availability of the product.

7.4.3 Product Performance Characteristics

The primary difficulty with hot melt technology is that it cannot meet many product performance demands. For example, some products require high corrosion resistance and/or heat

resistance. Hot melts are currently unable to provide these characteristics without using expensive reactive hot melts or without additional curing with electron beams or UV lights. Other products require the use of heat sensitive substrates (*i.e.*, some films) which may be damaged by the hot melt adhesives. Adhesive manufacturers are currently working to overcome these product performance deficiencies by developing new formulations.

7.4.4 Process Limitations

The hot melt process is limited by the performance of its raw materials. As the raw materials improve, so will the product performance. In addition, the hot melt system's ability to coat with more viscous materials may open the market for new products. For example, the hot melt process has made it possible for Hardcast, Inc. in Wylie, Texas, to produce a duct sealant on polyester and foil rolls. This product is not available in solvent form because it requires a coating thickness of 33 mil. Solvent systems cannot be coated at this thickness because of the low viscosity of the solvent adhesive. Traditionally, duct sealants were solvent-based and had to be applied manually to the duct with a brush, a very labor intensive process. The hot melt "sealant-on-a-roll" requires less labor because coating is preapplied to the correct thickness and curing is immediate.[13]

7.4.5 Health and Safety Issues

A hot melt system is much safer than a solvent system because the highly flammable and potentially explosive solvents have been eliminated. The main safety issue that remains is protecting employees from the heated equipment used to melt the adhesive. Also, precautions must be taken to keep the employee from contacting the heated adhesive during the mixing or coating process.

When using polyurethane reactive hot melts which contain isocyanates, other precautionary measures should be taken. Although the diisocyantes in the polyurethane formulation should not volatilize during the coating process because application temperatures are below volatilization temperatures, precautionary measures should be taken to prevent the operator from inhaling any fumes. This may require ensuring a positive air flow in the facility. In

addition, operators should wear protective gloves when handling the adhesive. Moreover, due to the presence of isocyanates in the adhesive, polyurethane hot melts cannot be used to package food due to the possibility of migration.

Epoxies also have worker safety issues. If the temperature exceeds 250°F (121°C), a chain reaction will occur, followed by release of gases and, possibly, an explosion. Therefore, epoxy systems require special controls to regulate temperature.

7.5 ECONOMIC BARRIERS TO ALTERNATIVE TECHNOLOGY

7.5.1 Capital Investment

In many instances economics is the factor limiting the use of hot melts. Switching to hot melt coatings requires capital outlays to convert an existing line to a hot melt line. In addition, hot melt adhesives which have the desired performance characteristics may not be readily available. This means that manufacturers will have to invest capital in research and development efforts to formulate a new adhesive with the desired properties.

7.5.2 Pricing and Potential Lost Market Pressure

The current market structure also discourages manufacturers from changing product lines. Customers require the products they purchase to meet certain performance characteristics. This is typically done by testing, or product certification through a laboratory such as Underwriters Laboratory. Each time the product is modified, the customer may ask for the product to be re-certified. The recertification process allows other companies to submit their products for certification as well. Therefore, switching adhesives provides a manufacturer's competitors an opportunity to capture a portion of their business. As a result, manufacturers often resist making product changes.

Hot melt adhesives are capable of performing most adhesive functions, however, they are not used because the tape market is very competitive. Profits average one cent per roll of tape sold to wholesalers. Therefore, the only way to make a profit is to sell large quantities. With such competitive pricing, manufacturers must assure their customers that they have the best

product. If switching to hot melt adhesives causes a loss in functionality of the product, customers will seek other vendors.

7.5.3 Payback Period

Approximately one year is required to recover the capital costs associated with converting a solvent-based line to a hot melt line when considering the change in adhesive costs, energy costs, labor costs, and environmental costs. Table 7-6 presents a cost itemization for conversion. These costs are based on the cost estimates outlined in Section 7.3. In addition, the payback period was based upon a 2.1 percent real discount rate, which is equal to the 1992 real growth in the gross domestic product (GDP).[10]

TABLE 7-6. ANNUALIZED COSTS

Annual Costs	Solvent System	Hot Melt System
Adhesive Cost	$16,200,000	$8,700,000
Labor Cost	$92,400	$46,200
Energy Cost	$230,000	$5,500
Environmental Compliance Labor	$29,300	$15,000
Landfill Costs	$3,500	$3,500
Hazardous Waste Disposal Costs	$11,250	$900

Due to the variability in adhesive costs, and labor costs among facilities, the payback period was also calculated considering only disposal costs and energy costs. Under this scenario, the payback period was three years.

In addition, the hot melt systems can be operated at line speeds up to three times greater than solvent-based systems. In facilities that need extra capacity to meet market demand, converting to hot melt will allow them to increase the capacity of each line and therefore increase the revenues per line.

7.6 EDUCATIONAL BARRIERS TO ALTERNATIVE TECHNOLOGY

7.6.1 Management Awareness

Most coaters formulate their adhesives in house due to concerns about trade secrets. Only 17 percent of all adhesives are purchased.[1] In many cases, the hot melt adhesive formulation is beyond the in-house capabilities of coaters. Therefore, management needs to establish closer ties with adhesive suppliers and manufacturers to help them understand the hot melt formulation process so that new hot melt products can be developed for the coater's end use.

7.6.2 Employee Training

A company's research and development employees may or may not need additional training in the polymer sciences to assist them in developing new hot melt formulations. In many cases, research and development employees have been trained in rubber chemistry rather than polymer chemistry because rubbers have been the traditional adhesive base.

Employees in the materials purchasing department may need to be trained to identify new hot melt products capable of performing the same function as a solvent-based product. In addition, they may need training to help evaluate the economic benefits of hot melt adhesives so that they do not merely look at raw material prices.

Finally, line managers and production employees will need to be trained in the proper handling and disposal procedures for hot melt adhesives.

7.7 POLLUTION PREVENTION/SOURCE REDUCTION RESEARCH OPPORTUNITIES

As discussed earlier, one of the barriers to the use of hot melt adhesives is that a large number of adhesive formulations are currently used, and many facilities do not have experience with hot melt chemistry. One method to alleviate this problem is to develop a publicly available database which would contain the performance parameters of various adhesive formulations.

Ideally, the converter would be able to input the performance parameters desired. The program would then identify several compounds which could be modified to meet these requirements.

The U.S. Army Armament Research Development and Engineering Center (ARDEC), under the sponsorship of the U.S. Army Materiel Command (AMC), has developed similar databases which contain information regarding the properties of various adhesives, adherents, and application techniques. The databases were designed to assist Department of Defense contractors in designing and repairing military equipment. One difficulty with the military databases is that much of the information is considered classified.[14] A publicly available version could be developed from the declassified sections of the databases and other available information. This database could also be developed with the assistance of adhesive manufacturers. Although many adhesive manufacturers will not provide the specific formulation of their products, they often will provide detailed descriptions of product performance as an inexpensive marketing method. The database will serve as a method of disseminating information on the adhesive products available and the coating methods available.

7.8 REFERENCES

1. Satas, Donatas. *Handbook of Pressure Sensitive Adhesive Technology*. Second Edition. Van Nostrand Reinhold. New York, NY. 1989.

2. Buccigross, Henry and Jay Cheney. "Hot Melt Adhesive Development and the Proliferation of Raw Materials," *1991 Hot Melt Symposium*. TAPPI. 1991.

3. Presentation by Thomas Hohenwater, Jr., Goldschmidt Chemical Corporation, Hopewell, VA. Energy Sciences Inc. Group Presentation. Wilmington, MA. November 17, 1993.

4. Telecon. Bert Blackwood, Swift Adhesives, Franklin Lakes, NJ, with Scott Snow, TRC Environmental Corporation, Chapel Hill, NC. December 3, 1993.

5. Meeting. Chuck Hubbard of Black Clawson, Fulton, NY, with William L. Blake, Jr., and Jill Vitas, TRC Environmental Corporation, Chapel Hill, NC. Discussion on hot melt application equipment. November 12, 1993.

6. Telecon. Ted Loranz, May Coating Technologies, Inc. Acumeter Division, Hopkinton, MA, with William L. Blake, Jr., TRC Environmental Corporation, Chapel Hill, NC. December 2, 1993.

7. Telecon. Glen Urquhart, Bolton-Emerson America, Lawrence, MA, with William L. Blake, Jr., TRC Environmental Corporation, Chapel Hill, NC. December 2, 1993.

8. Telecon. Guido Verini, Rotomec America, Atlanta, GA with William L. Blake, Jr., TRC Environmental Corporation, Chapel Hill, NC. December 2, 1993.

9. Guenther, Donald C. "Equipment Cost Estimate," Faustel, Inc., Germantown, WI. November 24, 1993.

10. *Statistical Abstracts of the U.S. 1993*. U.S. Department of Commerce, Bureau of the Census. pp 575, 742.

11. Telecon. Representative of Durham County Landfill, Durham, NC, with William L. Blake, Jr., TRC Environmental Corporation, Chapel Hill, NC. December 1993.

12. Nelson, Ken. "Hot Melts Grow in Popularity and Face New Challenges," *Adhesives Age*. May 31, 1993. pp 6-9.

13. Memorandum. Blake, William L., Jr. and Beth W. McMinn, TRC Environmental Corporation, to Carlos M. Nunez, U.S. Environmental Protection Agency. Site Visit-Hardcast, Inc. Wylie, TX. December 20, 1993.

14. Desmond, Anthony T., Joseph A. Brescia, and Kathleen A. Chabot. "Database Helps Engineers Choose Proper Bonding Method," *Adhesives Age*. May 31, 1992. pp.11-14.

CHAPTER 8
POLLUTION PREVENTION/
SOURCE REDUCTION RESEARCH OPPORTUNITIES

In spite of the identified barriers to radiation-curable adhesives, several opportunities exist which could help in reducing or removing these barriers. As stated throughout this document, the lack of practical, commercial use of radiation-curable adhesives in the coated and laminated substrate manufacturing industry is the greatest barrier to overcome.

In order to facilitate the transfer of information on this alternative technology to the industry, a focus group could be convened containing representatives from industry, trade associations, environmental agencies, radiation-curable coating and equipment suppliers, hot melt coating and equipment suppliers, waterbased coating and equipment suppliers, and other interested parties. The charter of the focus group would be to identify all barriers including those not discussed in this document, exchange information on alternative technologies (including research and development opportunities), and develop good working relationships between adhesive manufacturers and coated and laminated substrate manufacturers. By forming the focus group, technical, economic, and educational barriers could be discussed and eliminated. To further the information exchange, the focus group could encourage demonstrations at host facilities using the alternative adhesives, host educational seminars on alternative technologies, and provide guidance to EPA on the focus of their research efforts.

In addition to the information exchange within the focus group, another area of further study is to investigate the European market. It has been suggested that actual production facilities in Europe are using radiation-curable adhesives. It would be valuable to pursue the European market to determine what problems or opportunities they have discovered as a result of actual production using these alternative adhesives.

Additional opportunities for research into the marketing problems associated with alternative technologies would be beneficial. Many companies state that their customers are hesitant to purchase non-solvent-based products because of aesthetics. Surveys could be developed to better determine the specific characteristics that are lacking in the alternative adhesives. As a result of the information gathered in the marketing analysis, coated and

laminated substrate manufacturers could encourage radiation-curable adhesive manufacturers to develop products that overcome the aesthetic problems that have been identified. As part of the marketing study, purchasing personnel from retail outlets could be included in the technology transfer. This would allow customers to learn about the new technologies; their physical properties, and their environmental benefits. By providing these people with the appropriate information, better purchasing practices can be implemented that will help prevent pollution.

Economic incentives for the use of low-VOC emitting adhesives is another area that could be studied. Under the interpretation of section 182(g)(4) of the CAAA, States are encouraged to adopt economic incentive programs (EIP) to encourage the development of low-VOC surface coatings. The study would include a review of applicable State EIPs to determine which areas of the country are eligible for these incentives. Information could be transferred to coated and laminated substrate manufacturing facilities in those areas of the country where financial incentives would be available to assist them in meeting the applicable requirements to receive these benefits.

APPENDIX A

PRELIMINARY MARKET ANALYSIS

COATED AND LAMINATED SUBSTRATES FOR PACKAGING AND OTHER USES (SICs 2671 - 2672)

1. INDUSTRY DESCRIPTION

Coated and laminated paper and plastic films (webs) have a wide variety of uses, including packaging, labelling, adhesive tapes, and decals. The industry spans two 4-digit standard industrial classification (SIC) codes; SIC 2671 (Paper and Plastic Films Coated and Laminated for Packaging), and SIC 2672 (Paper and Plastic Films Coated and Laminated, Not Elsewhere Classified). Both of these SICs comprise the same industrial processes and consume many of the same materials. The primary differences are in the strict definition of the end uses of the products manufactured. The web coating industry is fragmented, with over 100 coating companies reporting annual sales greater than $1 million to *Ward's Business Directory*, a marketing information service (see Table 1).[1] Numerous other firms perform some coating as a secondary function. American Business Lists, of Omaha, Nebraska, records over 500 facilities operating under SIC 2671, and nearly 3,000 under SIC 2672.[2]

TABLE 1. DISTRIBUTION OF WEB COATING COMPANIES BY ANNUAL SALES (Annual Sales Over $1 Million, SICs 2671 - 2672)

Sales ($ million)	Number of Companies
> $1,000	3
$1,000 - $500	4
$500 - $100	10
$100 - $50	17
$1 - $50	89
Total Number of Companies	123

Source: *Ward's Business Directory of U.S. Private and Public Companies 1993*, Vol. 5

In addition to the coating of paper that occurs under SICs 2671 and 2672, paper is coated for printing and publishing uses by primary paper mills (SIC 2621). This coating process is almost entirely a water-based process, with kaolin clays as the primary pigment used to mask the

paper fibers. The pigments are coated onto the paper surface using binders, or adhesives, such as starch, casein, protein, or synthetic compounds.[3] Because it occurs at facilities not considered in the scope of this work assignment, this process is not addressed in the remainder of this report.

2. INDUSTRY ECONOMICS

The web coating industry has experienced significant growth over recent years. The industry can be broadly divided into coated webs for packaging uses and adhesive-coated products. The economic value of coated webs for packaging uses, including laminations such as those used for aseptic packaging, has steadily increased through the late 1980s and early 1990s. The economic value of adhesive-coated webs, including tapes, labels, and decals, has also increased in recent years as new applications for pressure sensitive adhesives have been developed. Table 2 shows the value of materials used, the value added by coating operations, and the combined economic value of shipments for SICs 2671 and 2672 from 1987 to 1991.[4,5]

TABLE 2. COMBINED ECONOMIC VALUE OF SICS 2671 AND 2672

Year	Cost Of Materials (Millions)	Value Added By Manufacture (Millions)	Value of Shipments* (Millions)
1987	4,054.4	3,317.1	7,333.9
1988	5,139.3	4,380.6	9,461.3
1989	5,577.0	4,513.9	10,083.9
1990	5,635.5	4,454.4	10,104.5
1991	5,858.5	4,662.2	10,526.9

* Value of shipments equates to the net selling value of all primary and secondary products and supporting services. It is a measure of the total economic value of transactions in this industry.
Source: *Census of Manufactures 1987* and *Annual Surveys of Manufacturing 1988 - 1991*

The coated web industry is dominated by several large manufacturers, the most well known of which is Minnesota Mining and Manufacturing Company (3M).[1] Table 3 shows the sales (including sales of products other than those classified under SICs 2671 and 2672) of the five largest web coaters. With over 75 percent of total sales among the companies involved in these SICs, these five companies are overwhelmingly influential in the course of technology development in this industry. 3M, in particular, is widely acknowledged to conduct strong research and development efforts, and uses a variety of technologies in its many operations. The

remainder of the industry includes many small companies. Table 4 shows the distribution of plants and density of employment by workforce size.

TABLE 3. FIVE LARGEST PAPER COATERS (BY SALES IN SICS 2671 -2672)

Company	Sales (millions)
Minnesota Mining and Manufacturing Company	13,503
Boise Cascade Corp., White Paper Division	2,610*
Bemis Company Inc.	1,142
Consolidated Papers Inc.	912
Appleton Papers Inc.	770*
Total Sales Of Top Five	18,937*
Percentage Of Total Industry Sales	76.8*

* Estimated
Source: *Ward's Business Directory of U.S. Private and Public Companies 1993*, Vol. 5

TABLE 4. NUMBER OF FACILITIES AND EMPLOYEES (SICS 2671 - 2672)

Work Force Size	SIC 2671		SIC 2672	
	Facilities	Employees	Facilities	Employees
1 - 49	42	W	284	4,600
50 - 99	23	1,700	56	3,800
100 - 499	50	9,100	61	11,800
500 - 999	5	3,000	8	10,700
1,000 - 2,499	0	0	3	W
Total	120	13,800 +	412	30,900 +

W = information withheld by Census Bureau
+ = employment is in excess of figure shown
Source: *1987 Census of Manufactures*

The States with the largest number of plants are California, Illinois, New York, Massachusetts, New Jersey, and Ohio. The Great Lakes region (EPA Region 5) has more plants

than any other area, followed by the Northeastern States (EPA Regions 1 and 2) and Southeastern States (EPA Regions 3 and 4). California (59 plants), Texas (25 plants), and Minnesota (14 plants) are the only States West of the Mississippi River with more than 10 facilities.[6]

Although sales in SICs 2671 and 2672 have been rising, employment has declined significantly in recent years.[4,5] Table 5 shows employment and compensation data for the paper coating industry between 1987 and 1991. The decline in total employment is only partly explained by a reduction in production labor, indicating that the industry is not only achieving manufacturing efficiencies, but is also beginning to focus on leaner support staffing as a means of controlling costs.

TABLE 5. EMPLOYMENT AND COMPENSATION (SICS 2671 - 2672)

Year	Total Employees			Production Employees		
	Number (000)	Payroll ($ Million)	Average Employee Compensation ($)	Number (000)	Wages ($ Million)	Average Production Worker Compensation ($)
	A	B	C	D	E	F
1987	42.1	1,134.6	26,950	29.1	692.5	23,797
1988	48.0	1,342.9	27,977	33.4	833.1	24,943
1989	52.1	1,431.3	27,472	35.8	882.9	24,662
1990	51.4	1,473.9	28,675	34.9	877.1	25,418
1991	49.6	1,483.6	29,911	34.1	886.2	25,988

Source: *Census of Manufactures 1987* and *Annual Surveys of Manufactures 1988 - 1991*

While sales have been increasing in the web coating industry, profits have lessened. Both SIC 2671 and SIC 2672 have experienced declining returns on sales over the years 1989 to 1992. This trend is evidence of a buyer's market in which firms have been forced to sacrifice margins to remain competitive, and is not unusual given general economic conditions over recent years. Return on assets and assets to sales ratios have both weakened in SIC 2671, while both have improved in SIC 2672. These trends would seem to indicate that coaters in SIC 2671 have not been able to fully utilize their capacity, while coaters in SIC 2672 have. However, without

further analysis, no conclusions can be drawn. Additional factors that might explain these trends include equipment age and depreciation practices. Current ratios, or the ratio of current assets to current liabilities, appear to show that the industry is managing liquidity well in a difficult environment.[7]

TABLE 6. KEY INDUSTRY RATIOS (SICs 2672 - 2673)

Year	Return On Sales		Return On Assets		Assets To Sales (Percentage)		Current Ratio	
	2671	2672	2671	2672	2671	2672	2671	2672
1989	3.7	3.2	7.1	3.4	42.1	41.1	1.9	1.8
1990	4.1	3.6	6.1	5.6	44.5	41.9	1.7	1.9
1991	3.3	3.1	5.0	6.6	58.3	37.7	2.4	1.7
1992	2.5	2.3	6.3	6.3	46.5	40.1	2.7	1.8

Source: Duns Analytical Services, *Industry Norms & Key Business Ratios (1989 - 1992)*

The coated web market is broadly segmented among commercial markets, with a small percentage of expenditures attributable to government sales (see Table 7). Consumer products such as adhesive and masking tapes that are manufactured in this industry are sold either directly to retailers, or through wholesale distribution channels. A large segment of the market is comprised of products sold to manufacturers for incorporation as components of larger end products. Labels, decals, and decorative panels fit into this segment. Finally, there is a large segment of the market that is not clearly defined. Coated web products that are consumed as supplies by service operations such as automobile paint and body shops may fit into this category.[4]

The cost of entry into this industry is relatively high when compared to the average of all industries, with the cost of an establishment ranging between two and three times as high as that of an average manufacturing facility.[6] Web coating is a very capital intensive operation, requiring large amounts of floor space for both materials storage and process equipment. Energy

costs are relatively high as well, due to the need for drying ovens. Equipment costs are significant, with a process line representing an average investment of more than $500,000.

TABLE 7. COATED AND LAMINATED WEB SHIPMENTS BY MARKET SEGMENTS

Market Segment	SIC 2671		SIC 2672	
	Value ($ million)	% of Total	Value ($ million)	% of Total
Wholesalers	466.2	19	1,041.8	19
Retailers	59.2	2	132.4	2
Manufacturers	1,014.1	41	2,266.2	41
Government	15.5	1	34.7	1
All Other	905.0	37	2,022.6	37
Total	2,460.0	100	5,497.7	100

Source: *Census of Manufactures 1987*

3. PROCESS

The web coating industry uses a variety of coating processes but the most common is roll coating. Alternative processes include knife coating, curtain coating, and various printing methods such as gravure, lithography, and screen printing. In addition to the actual coating process, the industry uses (1) mixing and blending equipment to prepare the coating materials, (2) ovens and other curing equipment to dry or cure coated materials, and (3) converting equipment to slit, sheet, and cut the coated product. Larger manufacturers also use automated packaging equipment to prepare their products for shipment.[8]

3.1 Process Flow Description

The web coating process involves four distinct sub-processes: (1) preparation of materials, including the blending of coatings; (2) coating of the substrate; (3) curing or drying of the coating; and (4) finishing the coated web by such processes as slitting, die-cutting, and rewinding.[8] Each of these processes is connected by material handling steps to preceding and subsequent processes. Material handling, while not a value-added process, is a significant activity representing both a large capital investment and a continuing expense.

Blending of coating materials is a relatively simple operation, but is very capital intensive. Coatings materials are delivered in drums, by tank-truck, or by rail car, and are blended in large vessels (up to 20,000 gallons in some cases). The coatings are then pumped into bulk storage tanks through dedicated piping. The coatings are delivered from storage to the coating lines through permanently installed lines and manifolds. Smaller facilities handling less volume frequently purchase their coatings in a ready-to-use form, or in a concentrated form that requires simple dilution. Such facilities generally pump their coatings directly from drums or totes, rather than from bulk storage tanks to the coating lines.

The coating process itself is a combination of three functions: (1) web transport; (2) coating delivery; and (3) application to the substrate.[8] Transport of the web is accomplished under tension using rollers and either optical or pneumatic guiding equipment. The coating, having been pumped from either a storage tank or portable vessel, is distributed at the point of coating application (*i.e.*, the coating head) either manually (by the operator using a putty knife

or other spreading device), or by rotating rollers. The coating must be uniformly distributed across the coating head, and is usually contained by dams or troughs. Application to the substrate occurs as the web is transported past the coating head. The transfer mechanism can be either direct, with the coating supply coming into contact with the web, or indirect, with a transfer mechanism such as a coating roller removing coating from the supply and transporting it to the web. The amount of coating applied is metered, usually mechanically by a knife, rod, or roller, but sometimes pneumatically, by an air curtain that blows excess coating back towards the coating supply.[8]

After a uniform layer of coating has been applied to the substrate, the web is transported through a drying or curing mechanism. With solventborne or waterborne coatings, this mechanism is an oven that evaporates the vehicle solvent, and removes the vapors, leaving the polymer solids on the web surface. With radiation-curable coatings, the mechanism is an energy source such as an ultraviolet lamp or electron-beam. The energy excites the coating molecules, causing them to crosslink into a solid film.[8]

Once a product is coated, it is slit into narrower widths according to its end use. Typical processing widths are 30 to 60 inches (0.76 to 1.5 meters). End product widths range as low as 0.0625 inches (0.16 cm), and as high as the full processing width of the web. Other converting capabilities that are typically found in a finishing department include die-cutting to shape (for labels or decals) and some printing. Rolls are wound to length when all finishing is complete, packaged, and shipped.[8]

3.2 Equipment

The equipment used to coat paper for uses other than printing is manufactured by a wide variety of general and specialty machine companies. *Thomas Register*, a standard reference used by industrial purchasing agents to identify vendors, lists over 100 vendors of coating machinery.[9] Not all of these vendors manufacture full coating lines. Some specialize in metering devices, curing mechanisms, or other components. However, there is clearly a competitive market for the manufacture of coating equipment, and a company trying to modify its current processes or install new ones has a wide array of options. Table 12 shows the name and location of coating machinery vendors reporting annual sales in excess of $50 million to the *Thomas Register*.

TABLE 12. VENDORS OF COATING MACHINERY REPORTING ANNUAL SALES GREATER THAN $50 MILLION

Equipment Vendor	City, State
FAG Industrial	Stamford, Connecticut
BTG Incorporated	Decatur, Georgia
Ball Metal Incorporated	Chicago, Illinois
George Koch and Sons Incorporated	Evansville, Indiana
Rutherford Machinery Division, Sequa Corporation	East Rutherford, New Jersey
Black Clawson Co., Conversion Machinery Division	Fulton, New York
Cincinnati Industrial Machinery Division of Eagle-Picher Industries	Cincinnati, Ohio
Gougler Industries, Division of Furukawa	Kent, Ohio
DeVilbiss Ransburg	Toledo, Ohio

Source: *Thomas Register*, Products and Services Series, 1993

In some cases, a coating company may require the products of more than one vendor to assemble a process line that will meet all of its production requirements. This complexity is itself a barrier to the introduction of alternative coating systems. Turnkey manufacturing systems are an inducement to an organization considering the installation of a new process. In those instances where a company is considering the modification of existing equipment, their options may be reduced to smaller vendors that specialize in the engineering of process lines. Larger vendors are likely to be less eager to pursue the retrofit of existing equipment, preferring instead to dedicate their efforts to sales of new units.

3.3 Raw Materials

The basic materials used in web coating include flexible substrates, such as paper and light gauge plastic films, and liquid coatings. The combined SICs use in excess of $1.5 billion of paper annually, while consuming nearly $250 million of glues and adhesives. Additional raw materials include plastic resins, foils, inks, and petroleum wax. The industry uses a significant

amount of packaging materials, with purchases of paperboard containers, boxes, and corrugated paperboard exceeding $140 million annually.[6]

4. EMISSIONS

The paper coating process has both air emissions, and liquid and solid waste streams. The primary points of air emissions are the mixing operations, the coating head, and the oven exhaust. Sources of fugitive air emissions include the delivery and transfer of coating materials (loading dock), bulk storage tanks, coating transfer lines and vessels (both permanently installed and mobile), and cleaning operations (including dip tanks, cleaning solvent storage cans, and the actual wiping of equipment).

Common process liquid waste streams (including liquid hazardous wastes) are spent cleaning solvents, wastewater from cleaning of vessels and tanks, and contaminated coating materials. The potential for accidental releases exists both on the loading dock and in storage and transport of coating materials. The Toxic Release Inventory (TRI) database does not indicate significant liquid wastes from SICs 2671 and 2672.[10] It is not known at this time whether this is an accurate reflection of the process waste, or an anomaly of the reporting requirements.

Solid wastes include the solvent soaked rags that are used for cleaning of equipment, waste substrate material from the web transport and coating process, and discarded packaging materials. Of these solid wastes, the rags and some waste substrate material are likely to be classified as hazardous wastes, although some facilities allow their solvent soaked rags to dry by evaporation before discarding them as a solid waste.

All emissions and waste stream data were taken from the 1991 TRI database. The combined emissions and wastes of the two SICs are shown in Table 12. In SIC 2761, 150 sources of an estimated 200 facilities nationwide reported to the database in 1991. In SIC 2672, 309 of an estimated 400 facilities reported to the database.

TABLE 12. TRI DATABASE EMISSIONS AND WASTE STREAMS (SICS 2671 - 2672)

Waste Type	1991 Releases (lbs)
Air Emissions	45,996,431
Waste Water	717,232
Solid Wastes	19,014

Source: *Toxic Chemical Release Inventory Database*, National Library of Medicine, U.S. Department of Health and Human Services

5. CONCLUSION

No direct information on the penetration of the web coating industry by waterborne and radiation-curable coatings was found during the preparation of this report. However, numerous contacts throughout the industry and with materials suppliers indicate that there are a variety of coating applications that are currently being satisfied by waterborne technologies, and that radiation-curable technology is also gaining greater favor among coaters. Steady progress is being made by research and development departments at both resin manufacturers and coating suppliers in formulating radiation-curable adhesives. This industry can be categorized as having good potential for further penetration of these low-emissions coating technologies.

6. REFERENCES

1. *Ward's Business Directory of U.S. Private and Public Companies*, Gail Research Inc., 1993, Volume 5.

2. American Business Lists, Omaha, NE, Mailer #01-003, January 1993.

3. Ducey, Michael J. "What is Paper Coating?" *Graphics Arts Monthly* Vol. 64, No. 3 (March 1992) pp.118-121.

4. United States, Department of Commerce, Bureau of the Census. *Census of Manufactures, 1987*. GPO, 1988.

5. United States, Department of Commerce, Bureau of the Census. *Annual Surveys of Manufacturing, 1988-1991*. GPO.

6. Editorial Code and Data, Inc., *Manufacturing USA: Industry Analyses, Statistics, and Leading Companies*, Gail Research Inc., 1992.

7. Duns Analytical Services, *Industry Norms & Key Business Ratios*, 1989-1992.

8. McMinn, Beth and Vitas, J. B., *Improved Equipment Cleaning in Coated and Laminated Substrate Manufacturing (Phase I)*. EPA-600/R-94-007 (NTIS PB94-141157). U.S. Environmental Protection Agency, Air and Energy Engineering Research Laboratory, Research Triangle Park, NC. January 1994.

9. Thomas Publishing Co., *Thomas Register of American Manufacturers*, 83rd Edition, New York. 1993.

10. United States, Department of Health and Human Services, National Library of Medicine. *Toxic Chemicals Release Inventory Database, 1991*. TOXNET®.

APPENDIX B

TRIP REPORTS

From	Location	Date	Page
Hardcast, Inc.	Wylie, TX	11/22/93	B-2
Energy Sciences, Inc.	Wilmington, MA	11/17/93	B-7

TRC
TRC Environmental Corporation

6340 Quadrangle Drive, Suite 200
Chapel Hill, NC 27514
☎ (919) 419-7500 Fax (919) 419-7501

Date: December 30, 1993

To: Carlos Nunez
Organics Control Branch
Air and Energy Engineering Research Laboratory (MD-61)
U.S. Environmental Protection Agency
Research Triangle Park, NC 27711

From: William L. Blake, Jr.
Beth W. McMinn
TRC Environmental Company

Subject: Site Visit - Hardcast, Inc.
Manufacturer of Duct Sealant
EPA Contract 68-D2-0181, Work Assignment Number 1/005
TRC Reference Number 1645005

I. Purpose

As part of its emphasis on pollution prevention, the U.S. Environmental Protection Agency (EPA) is identifying the barriers to the extended use of hot melt, radiation-cured, and waterbased coatings in Source Reduction Review Project (SRRP) categories and Maximum Achievable Control Technology (MACT) categories. TRC Environmental Corporation (TRC) is supporting EPA in this effort by evaluating the current use of these coatings in the coated and laminated substrate industry (SICs 2671 and 2672) under Work Assignment Number 1/005, EPA Contract Number 68-D2-0181.

The primary type of air emissions in the coated and laminated substrate industry is volatile organic compounds (VOCs) and Hazardous Air Pollutants (HAPs) used in adhesive and other coating formulations. VOCs and HAPs are emitted during the drying process as the coated substrate is heated to evaporate the solvent in the coating. Hot melt coatings are considered a pollution prevention alternative for the industry because they are 100 percent solid formulations which remain on the substrate during the curing process. As a result, no solvents are emitted during the coating and drying process.

The purpose of the visit to Hardcast in Wylie, Texas, was to review the hot melt coating process. Hardcast uses hot melt technology to make a duct sealant in the form of a high performance pressure sensitive tape.

This trip report includes four sections. Section II identifies the location of the Hardcast facility. Section III presents the individuals who participated in the site visit, and Section IV includes the technical information compiled during the site visit.

II. Place and Date

Hardcast, Inc.
P.O. Box 1239
903 West Kirby
Wylie, TX 75098
(800) 527-7092

November 22, 1993

III. Attendees

Hardcast, Inc.

Harris Armstrong, General Manager

TRC Environmental Corporation

William L. Blake, Jr., Environmental Engineer
Beth W. McMinn, Environmental Engineer

IV. Discussion

The visit to the plant included an opening conference and a tour of the production lines. During the visit, the following topics were discussed:

- Company Profile
- Market Segments
- Manufacturing Process
- Environmental Impacts

Each topic is discussed in detail below.

Company Profile

Hardcast is a manufacturer of duct sealing systems. They began operations 25 years ago with the development of a two-component waterbased duct sealant. Through the years, they have expanded their product lines to include one-component waterbased duct sealants, and, as of 10 years ago, hot melt duct sealing tapes.

Carlisle Syntec Systems, which specializes in roofing membranes, acquired Hardcast six years ago because they wanted to add the hot melt and waterbased sealant systems to their product line. Carlisle Syntec is a subsidiary of Carlisle Companies, Inc.

Market Segments

Hardcast's primary market segment is the HVAC industry. Hardcast has three main products including: a brush-on one-component waterbased duct sealing system, a brush-on two-component waterbased duct sealing system, and a hot melt "sealant-on-a-roll."

The one-component waterbased duct sealing system is simply a sealant which is applied to the duct with a brush. A seal is formed as the water in the sealant is evaporated and the remaining solid sealant bonds to the duct. The two-component waterbased duct sealing system consists of a fiber impregnated cheese cloth component and a sealing component. The end-user will dip the fiber impregnated cloth into the sealant. Then, he/she will wrap the dipped cloth around the duct. A seal is formed as the water evaporates and the remaining solid sealant bonds with the cloth and the duct. The hot melt duct sealing system consists of a foil coated with sealant in the form of a pressure sensitive tape. The end-user simply unwinds the tape and presses it in place. The system forms an immediate bond and reaches a final cure after 24 hours.

Hardcast sells these products as alternatives to traditional, solvent-based systems which come in cans and must be applied to the duct with a brush. The Hardcast duct sealing products also offer a means of overcoming some of the deficiencies associated with solvent-based systems. For example, waterbased and hot melt coatings do not emit VOCs during duct sealing. As a result, ducts can be sealed while a building is occupied, unlike solvent-based sealants which require the area being sealed to be vacant. The hot melt system has the added feature of immediate bonding, allowing the HVAC system to become operational sooner. In addition, the hot melt coating thickness is controlled, so the end-user does not have to worry whether too much or too little coating is applied. If too much coating is applied, the cost of sealing the duct work rises. If too little coating is applied, the seal will not last and the duct will need to be recoated. Moreover, hot melt coatings require less labor to apply than the solvent-based coating systems. Even though the tape is more expensive for the same amount of coating, the applied costs are less due to the labor savings and the consistent coating thickness.

Due to customer requests over the years, Hardcast has also developed some specialty products. For example, the duct sealing tape is often used as a temporary patch for holes in trailers of roadway trucks. As a result, Hardcast developed a permanent patch for these trailers. The permanent patch consists of applying a piece of metal coated with hot melt sealant to a thickness of 33 millimeters. The patch is then positioned over the holes, and held in place by the pressure sensitive sealant backing. However, these specialty products are only a small portion, less than 10 percent, of Hardcast's overall revenue.

Manufacturing Process

Hardcast has three different manufacturing processes, waterbased sealant production, fiber impregnated substrate production, and hot melt sealant-on-a-roll production. The waterbased sealant production process is used to make the one-component waterbased duct sealants and the sealant component of the two-component waterbased duct sealants. Each of these sealants is blended using banbury-type mixers. The blended sealant is pumped to a temporary holding tank from which the product can be dispensed into containers for shipment and sale.

The manufacturing process for the fiber impregnated substrate component of the two-component waterbased sealants begins with banbury mixers. These mixers are used to create a gypsum slurry which is pumped into a coating application pan on the coating line. The slurry is applied to the cheese cloth using a knife-over-roll coater. After coating application, the substrate passes through a 15 to 20 feet dryer to remove excess water. The evaporated water goes to the atmosphere. The entire system operates at a speed of 50 fpm.

The hot melt duct sealant production process also begins with mixing operations. In the first phase, butyl rubber and modifiers are blended in a heated banbury mixer. The blended rubber is then dumped onto the talc-covered floor and allowed to cool. After sufficient cooling, the modified rubber solidifies. Next, the modified rubber is manually chopped into small pieces and added to another heated mixer, where tackifiers are added to create the final hot melt coating formulation. After mixing, the hot melt coating is pumped to a heated holding tank, where it will remain until it is needed in the coating operation. The tank is heated to keep the coating in its molten state.

The hot melt coating line operates at 20 to 60 fpm and consists of a 4 feet wide slot die which is heated to temperatures of 300° to 375°F, a laminating station, a chilled roller, and wind and unwind stations. First the substrate is unwound and coated with 15 to 33 millimeters of sealant. The hot melt is pumped from the heated storage tank through a filter into the slot die as needed. Next the release liner, usually polyester, is unwound and laminated to the sealant. In instances when the substrate is heat sensitive, the release liner is coated with sealant, and the substrate is laminated to the sealant after it has cooled. The coated and laminated product passes over a chilled roller to speed the curing process. Finally, the coated and laminated substrate is rewound and moved by crane to a slitting machine where it is converted to the desired width.

Environmental Impacts

The hot melt production process has fewer waste streams than a solvent-based system. The hot melt production process at Hardcast does not emit any VOCs during the coating process since hot melt adhesives are 100 percent solid and do not require any vehicle solvents. In addition, the hot melt production process does not have any emissions from the fossil-fuel fired dryers because drying is not needed to cure the sealant. Some particulate matter, in the form of talc, is emitted during the hot melt sealant formulation process. The talc used during the blending process is collected and reused.

The solid waste from a hot melt process is comparable to a solvent-based production process. Both processes generate waste slitter ends and defective product which are considered non-hazardous and can be landfilled.

Hot melt facilities may generate some hazardous waste during equipment cleanup. Hardcast uses mineral spirits to clean the equipment. However, they use only one or two 55-gallon drums annually. Because much mineral spirits evaporates during cleaning, Hardcast generates very little hazardous waste. The rags used to clean the equipment are considered a non-hazardous solid waste and can be landfilled.

The other emissions at the Hardcast facility are from the waterbased duct sealing systems. Combustion products, primarily water and carbon dioxide, are emitted to the air from the dryer used in making the fiber impregnated cloth. Some 1,1,1-trichloroethane (TCA) is currently used in the waterbased products. TCA can be emitted in the form of a vapor or a liquid waste discharged to the sanitary sewer. However, the TCA should not be part of the formulation by February 1994 due to an effort by Hardcast to eliminate hazardous materials from their products. In addition there are small amounts of ethylene glycol in the waterbased formulations which can be emitted during formulation in the form of vapor or as a discharge to the sanitary sewer. Moreover, some hazardous waste is generated from the waterbased lines because the sludge from the gypsum slurry is considered hazardous.

TRC
TRC Environmental Corporation

6340 Quadrangle Drive, Suite 200
Chapel Hill, NC 27514
☎ (919) 419-7500 Fax (919) 419-7501

Date: December 15, 1993

To: Carlos Nunez
Organics Control Branch
Air and Energy Engineering Research Laboratory (MD-61)
U.S. Environmental Protection Agency (EPA)
Research Triangle Park, NC 27711

From: Geary D. McMinn
TRC Environmental Corporation

Subject: Visit to Energy Sciences, Inc., a manufacturer of Electron Beam (EB) curing equipment
Wilmington, Massachusetts, November 17, 1993
EPA Contract 68-D2-0181, Work Assignment 1/005
Technical, Economic, and Educational Barriers
TRC Reference Number 1645005

I. Purpose

As part of its emphasis on pollution prevention, the U.S. Environmental Protection Agency (EPA) is identifying the barriers to the extended use of radiation-cured and waterbased coatings in Source Reduction Review project (SRRP) Categories and Maximum Achievable Control Technology (MACT) categories. TRC Environmental Corporation (TRC) is supporting EPA in this effort by evaluating the current use of these coatings in the coated and laminated substrate industries (SICs 2671 and 2672) under EPA Contract Number 68-D2-0181, Work Assignment 1/005.

The primary sources of emissions in the coated and laminated substrate industry are volatile organic compounds (VOC) and hazardous air pollutants (HAPs) used in pressure sensitive adhesives (PSA) and other coatings, such as saturants and release coats. Electron Beam (EB)-cured coatings, one type of radiation-cured coating, are recognized as a possible pollution prevention alternative because they emit extremely small amounts of VOCs during the curing process. The EB-curable coatings are 100 percent solids and therefore, have minimal emissions.

The primary benefit of the visit to Energy Sciences Incorporated (ESI) was to attend a meeting and interact with manufacturers involved in supplying EB-related services to the coated and laminated substrate industry. Some of the meeting attendees included EB-curing equipment, release coating, adhesive coating, and application equipment manufacturers. This group of suppliers provides a total package concept (TPC) to potential customers to help meet their needs. The meeting followed the agenda below:

Offices in California, Colorado, Connecticut, Illinois, Louisiana, Massachusetts, Minnesota, New Jersey, New York, North Carolina, Ohio, Oregon, Texas and Utah
A TRC Company
Printed on Recycled Paper
An Equal Opportunity Employer

	Subject	Presentor
I.	Welcome and Introductions	ESI
II.	Pilot Line Tour	ESI
III.	Purpose of Meeting	TRC
IV.	EB-Curable Adhesive Coating Supplier	Swift Adhesives Corp.
V.	EB-Curable Release Coating Supplier	Goldschmidt Chemical Corp.
VI.	Coating Equipment Supplier	Faustel Equipment Corp.
VII.	EB-Curing Equipment Supplier	ESI

This trip report includes three sections and one attachment. Section II identifies the individuals who participated in the visit and Section III summarizes the information presented.

II. Location, Data, and Attendees

Location of Presentation and ESI contact

Energy Sciences Inc.
Fred McIntyre
42 Industrial Way
Wilmington, MA 01887
November 17, 1993

Energy Sciences Inc.

Frederic McIntyre
Todd Truex
John Chrusciel
Greg Tully

42 Industrial Way
Wilmington, MA 01887
(508) 694-9000

Swift Adhesives Company

Bert Blackwood
795 Franklin Ave.
Franklin Lakes, NJ 07417
(201) 891-3355

Keith Bachmann
3100 Woodcreek Dr.
P.O. Box 1546
Downers Grove, IL 60515
(708) 971-6776

Goldschmidt

Tom Hohenwater

914 E. Randolph Road
P.O. Box 1299
Hopewell, VA 23860
(804) 541-8658

Faustel

Donald Guenther	P.O. Box 1000 Germantown, WI 53022 (414) 253-3333

TRC Environmental Corporation

Beth McMinn Geary McMinn	100 Europa Dr., Suite 150 Chapel Hill, NC 27514 (919) 968-9900

Mass. Office of Technical Assistance

John Fleen Kenneth J. Soltys	100 Cambridge St., Suite 1904 Boston, MA 02202 (617) 727-3260

III. Discussion

The ESI meeting and technical presentations offered an opportunity to confer directly with EB-curable coating and machinery manufacturers. Each of the presenters represents one component of the total package concept of EB technology. Alone, the representative companies would be unable to further the use of the EB technology, but by working together, they provide a potential customer with equipment, coating, and application experience. The information below summarizes each of the technical presentations.

Pilot Line Tour

ESI operates an EB-curing pilot coater at their Wilmington, Massachusetts, facility. The coater is used for research and development, material scale-up, limited production samples, and demonstration purposes. At the time of the ESI meeting, the pilot coater was applying an EB-curable clearcoat to an 18 inch polyethylene web to be used as labels for two-liter soft drink bottles. The 500 feet per minute application speed allowed the pilot coater to apply the clearcoat at the rate of approximately 1 to 1.5 pounds per 3,000 ft^2.

ESI's pilot line is capable of running approximately 900 feet per minute. The pilot coater is equipped with a corona treater, a device which treats the substrate to help the coating adhesion. The application rollers on the pilot coater can be offset gravure, direct, or knife-over-roll. The clearcoat being applied on November 17 was 98 percent solids with a small amount of solvent (*i.e.*, isopropyl alcohol - IPA) added to improve clarity. The source of the curing mechanism is the EB light which provides a high energy concentration which penetrates and solidifies the coating. The accelerated electron beams bombard and penetrate the coated substrate. The electrons loose their energy in the coating material where they interact with the prepolymer

material forming the radical required to begin the polymerization process. The amount of energy lost from the electrons is directly related to the cure level of the coating.[1]

When the EB-curing device is in operation, ozone is formed. The EB chamber is equipped with a nitrogen blanket to prevent ozone from escaping to the atmosphere. The curing system typically heats the substrate 4°C per megarad of radiation dosage above the ambient temperature. The coating operator commented that for inks and PSAs, an increase in temperature of 2°C and 6°C per megarad, respectively, was standard. Coating cleanup is performed with rags, IPA, and acetone, which is used only when the cured coating attaches to machinery.

Swift Adhesives Corp. - EB Adhesive Coating Supplier

Swift Adhesives Corporation formulates EB-curable adhesives. Swift offers over 2,500 products worldwide. Some of the products for the coated and laminated substrate industry are waterbased coatings, hot melt adhesives, and hot melt/EB-curable adhesives. The primary market for these coatings has been labels and graphic arts applications for food product packaging. Swift is a formulator, marketer, and seller of the hot melt EB PSAs.

Swift representatives discussed their basic hot melt/EB-curable PSA, 2C145, which offers higher temperature resistance and lower viscosity than traditional solvent-based coatings. Swift's one-component, 100 percent solids EB PSAs offer rapid cure (*i.e.*, less than one second), and have high cohesive strength, plasticizer resistance, good holding power, and excellent peel and tack. Hot melt/EB-curable PSAs can be used with a facility's current hot melt machinery.

Goldschmidt Chemical Corp. - EB-Curable Release Coating Supplier

Goldschmidt Chemical has been formulating EB and ultraviolet (UV) silicone acrylates since the early 1980s. They are currently the only producer of silicone acrylates. The primary market for EB- and UV-curable coatings has been in Europe. Presently, all of Goldschmidts's EB- and UV-curable coatings are manufactured in Germany. However, Goldschmidt will begin producing the coatings in the United States in 1995. EB acrylates have no photoinitiator or monomers and require no post-cure. Goldschmidt's EB/UV-curable coatings have been approved by the Food and Drug Administration (FDA) for contact with food.

Goldschmidt's EB/UV-curable coatings are 100 percent solvent-free silicone acrylates which can be applied to many substrates including paper, and a variety of films like polyethlene, polyesters, and polypropylene. EB-curable coatings are considered non-hazardous waste both in cured and uncured states. They offer little to no weight loss since they are 100 percent solids, increase the tinsel strength of the substrate and can be applied to recycled paper. One paper tape manufacturing facility in Europe uses approximately 1 gram of EB-curable coating per m^2 at 2 megarads energy. This converts to approximately 0.6 lbs per ream of paper.

The EB-curable coatings do have some negative aspects. First, the coatings can discolor polypropylene and other substrates if they are run with higher rads than necessary. Second, the curing chamber must be inerted in nitrogen to prevent releases of ozone during the radiation

curing process. Finally, the cost of the coating is approximately $10 per pound ($22.00 per Kg) for 100 percent solids coating. If a solvent-based adhesive is approximately $2.50 per pound ($5.51 per Kg) for 40 percent solids, then a comparable 100 percent solid coating would cost approximately $6.25 per pound ($3.77 per Kg).

Faustel Equipment Corp. - Coating Equipment Supplier

Faustel is a designer and manufacturer of machinery used in the production of coated, laminated and printed flexible products. Faustel provides coating machinery for traditional solvent-based coatings, waterbased PSAs, and UV/EB-curable reactives. The company provides its customers with machinery and the process knowledge to determine the best coating methods, machine compatibility, and materials availability for production. Faustel also offers a "Technology Center" which provides customers with a pilot coater/laminator to test their specialized designs prior to actual production.

Energy Sciences Incorporated - EB Curing System Supplier

ESI provides both UV- and EB-curing mechanisms. The EB-curing process energizes electrons which are absorbed by molecules (free radicals) in the coating. The free radicals cause the polymerization of the monomer and prepolymer which make up the liquid coating. Curing occurs within approximately a few milliseconds after passing through the electron beams. Line speeds can exceed 1,640 feet per minute (500 meters per minute) with the inerting system in place. The inerting system controls the ozone created when the electrons contact the coating and substrate. Presently, ESI's EB machinery can process 100 inch wide substrates. Substrates with widths of 144 inches are possible with equipment modifications. The challenges for ESI are to develop faster cure speeds, lower N_2 requirements, and no ozone escaping from the use of the specialized coatings.

In addition to the presentation summaries above, TRC and the meeting attendees discussed questions developed prior to the meeting. The questions and resulting comments are included below.

General

1. How long has ESI been making electron beam curing equipment?
   Since 1970

2. What converting markets do you currently serve?
   Food packaging, graphic arts, printing, converting

3. What percentage of your total business does each market represent?
   Graphic arts is 40 to 50 percent, remainder is approximately equal

4. What markets do you feel will be important in the future?
   Silicone release coatings, PSAs, flexible packaging, laminates

Process Information

5. What types of PSA products have you successfully produced? What types of EB-cured PSA products have been successfully produced commercially?
Two grades which are prototypes; None used commercially in U.S. but waiting for customers

6. For each of those products, what were the benefits and short-falls of the EB-cured adhesive?
High temperature resistance, sheer strength, plasticizer resistance; substrate discoloration

7. Are there any substrates to which EB-cured adhesives cannot be successfully applied?
Porous substrates (fabric) and substrates with prior solvent-based coatings

8. What equipment modifications are necessary to accommodate the EB-cured adhesive? Can existing coating equipment be used?
So far all rollers will coat with EB-curable coatings, a new curing mechanism is needed

9. What other modifications, such as corona treatment of the substrate or reformulation of the release coat are necessary?
Depending on the substrate and coating combination, corona treatment may be necessary; EB adhesives can be used with waterbased release coats but not in combination with solvent-based or UV-curable coatings

10. What line speeds are possible with this equipment? Compared to line speeds for a thermal system and to a liquid UV system?
EB can presently run at 500 meters/minute; UV is about the same

11. What is the operating temperature of the EB-cured adhesive?
Curing increases the temperature of the substrate approximately 4°C per megarad of EB dose. The application temperature of hot melt/EB-curable adhesive is approximately 300 to 325°F (163°C)

12. What variables may be manipulated to adjust the cure? (line speed, EB intensity, etc.)
Cure time, exposure, voltage, change coating reactivity

13. What is the expected life of the EB system?
20 years

14. How often do the filaments/window foil need to be changed?
Filaments - 10,000 hours, window foil - 2,000 hours of operation

15. What substrate widths is your equipment able to process?
Up to 100 inches (250 cm) standard but 144 (370 cm) is possible with some changes

16. According to several sources, an EB/low melt combination is being developed in Europe. What is pushing the European adhesive manufacturers to this new technology?
Low melt has properties similar to acrylic adhesives and eliminates solvent emissions; there is more interest in U.S. due to environmental push. However, there are more facilities in U.S. using hot melt adhesives (50+ percent) compared to Europe (15 - 20 percent).

Costs

17. How do the capital costs of an EB system compare to a thermal system? To a liquid UV system?
Thermal with control device is equal to EB system; UV systems are one-half the cost of EB systems

18. How do the maintenance costs of an EB system compare to a thermal system? To a liquid UV system?
EB is about $2,000, thermal is about $2,500; UV is about $6,000 to $8,000

19. How do the raw material costs of an EB system compare to a thermal system? To a liquid UV system?
EB is about 2 to 3 times as much as thermal for adhesives; UV- and EB-curable adhesives are approximately the same, UV-curable release coats cost more than EB-curable release coats

20. How do the energy costs of an EB system compare to a thermal system? To a liquid UV system?
EB system costs are about 10 percent of an electric thermal system, less than a gas thermal system; EB cost are one-third of UV-curing system

21. In your presentation at the CMM conference, you stated that an EB system on a dollars per square meter of product is about 6.3 percent less expensive that the equivalent thermal system. What product was being manufactured and have any similar cost comparisons been done for other PSA products?
A 38 inch (96.5 cm) graphic arts web offset printing process; Unknown at this time

22. What hidden benefits are there to using an EB system (*i.e.*, reduction in floor space, insurance, safety)?
No fire problems, chemicals are safer to handle, insurance costs may reflect these changes

Marketing

23. What are the concerns expressed by the PSA tape and label manufacturers with regard to this technology?
Three areas of concern; Cost, Performance, Productivity

24. In our discussion with several PSA tape and label manufacturers, aesthetics is a major concern. What are you as an equipment provider of the "total package concept" doing to help alleviate this problem?
Working to make color and texture of coatings the same as with thermal/solvent-based systems

Emissions and Waste

25. Is ozone generation a concern with EB curing units? Can this be overcome with modified ventilation?
Negligible with inerting capabilities; no need to modify standard ventilation

26. What classification of waste is spent EB-cured adhesive: hazardous or solid?
Solid, non-hazardous waste

27. Are there any emissions associated with the EB system (*i.e.*, the adhesive itself, or during the application and curing process)?
Negligible ozone emissions

28. What other wastes are associated with an EB system (water, hazardous waste, solid waste)?
Water from cooling for shielding is recirculated, solid waste from make-ready scrap, and any waste from cleaning (i.e., IPA, industrial soap)

Safety

29. What specific safety precautions must be taken with an EB system (*i.e.*, personal protective equipment, procedures, etc.)?
See the Safety Report (Attachment A) with Package for safe handling practices, lock-out/tag-out, and standard safe operating procedures. Suppliers of coatings teach safe handling of chemicals as with solvent-based coatings

REFERENCES

1. C.R. Newman and Stephen A. Walata. *Radiation-Curable Coatings*. EPA-600/2-91-035. (NTIS PB91-219550). Control Technology Center, Research Triangle Park, NC. April 1991.

ATTACHMENT A

RADIATION-CURABLE SAFETY REPORT

ESI Energy Sciences Inc.
42 Industrial Way, Wilmington, MA 01887 U.S.A.
Tel. (508) 694-9000 Twx 710 348 0379 esi Fax (508) 694-9045

An open letter to customers who are installing ESI Electrocurtain® systems

From: ESI Customer Service

Dear Sir:

This letter includes several items enclosed to assist you in understanding those safety issues which relate to the ESI Electrocurtain system you have purchased. Like all industrial equipment, electron beam systems should be operated by trained individuals, but the level of training required is not unusually stringent. Good manufacturing practices and the Electrocurtain safety features combine to provide system safety for the typical industrial environment.

Electron beam systems utilize high energy electrons to treat your product. Therefore, the two most important safety concerns are high voltage and radiant energy. By radiant energy, we mean the electrons themselves and also the small amount of x-rays produced within the Selfshield® during production operations.

The ESI representative who supervises the installation of your system is your primary employee "trainer". He will work closely with your operator and maintenance teams to familiarize them with the complete system. For high voltage, considerations, a brief explanation of the power train, its safety features, and the precautions required during operation or service will suffice to ensure worker safety when properly understood and followed.

The radiant energy developed by the system can become more of an employee concern and is usually dubbed "radiation". Not infrequently, people begin to harbor totally inappropriate fears because they don't understand either radiation or this kind of equipment. Therefore, putting this system's "radiation" characteristics in proper perspective is crucial and, in fact, has led to total worker-acceptance in hundreds of plants around the world. The installation supervisor is your on-site resource for training your maintenance people and line operators with regard to radiation safety features and procedures. If it is requested, ESI can provide a more general safety presentation for your other employees. This would consist of a one hour presentation (and discussion) of the kind of system this is (that it is similar to a microwave oven) and how ESI ensures that the radiation inside poses no threat to people.

In addition to these training and presentation provisions, the enclosed materials are supplied to give you a single package of radiation-safety-related information. There are items included for:

(1) All employees within the production facility.
(2) Maintenance and operators working with the equipment.
(3) Management personnel.

Those items are described as follows:

(1) For all employees, there is a sheet entitled "Putting Radiation Doses in Perspective" (Appendix 1) and a booklet entitled "Radiation - A Fact of Life" (Appendix 2). The sheet demonstrates that film badges on ESI employees have shown radiation doses that are 500 times less than what OSHA calls perfectly safe! That is important to communicate.

The booklet can help them understand what radiation is and how we live in it all the time. (This can be ordered from the International Atomic Energy Agency in Vienna, Austria.)

(2) For maintenance and operators, there is the safety section (#2) of the operator's manual (Appendix 3). These are discussed in detail by the installation supervisor.

(3) For management, there is a technical report (TR-107) on safety considerations for these systems (Appendix 4). Such issues as x-ray shielding, applicable federal regulations and the use of film badges are discussed. (The badges are not required but can be used to monitor dose received by workers.) Also the industrial experience is described for several companies whose workers wore film badges around ESI Electrocurtain systems. The data amply proves the equipment is well within the OSHA "safe" limit.

There is a set of sheets summarizing what a company "Radiation Protection File" should include (Appendix 5). Blank forms are included in this set and should be filled out with data relating to your Electrocurtain system.

For management which wants to consider using film badges (if only for one year, as has often been done), a pamphlet from Landauer is enclosed (Appendix 6). This company provides monthly checks on whatever radiation doses are received by the personnel film badges. They can provide full instructions about the badges and how they can be used.

There is also a Service Bulletin which describes the kind of routine checks that should be undertaken and recorded on a monthly basis (Appendix 7).

Finally, an example of procedures relating to radiation protection is included (Appendix 8). Since each company must develop policies and procedures to meet their own standards, the example is included to be used as a guideline if your company wishes to officially document how workers should deal with radiation protection.

If there are any further ways we can assist you in these matters or any safety concern, please do not hesitate to call.

PUTTING RADIATION DOSES IN PERSPECTIVE
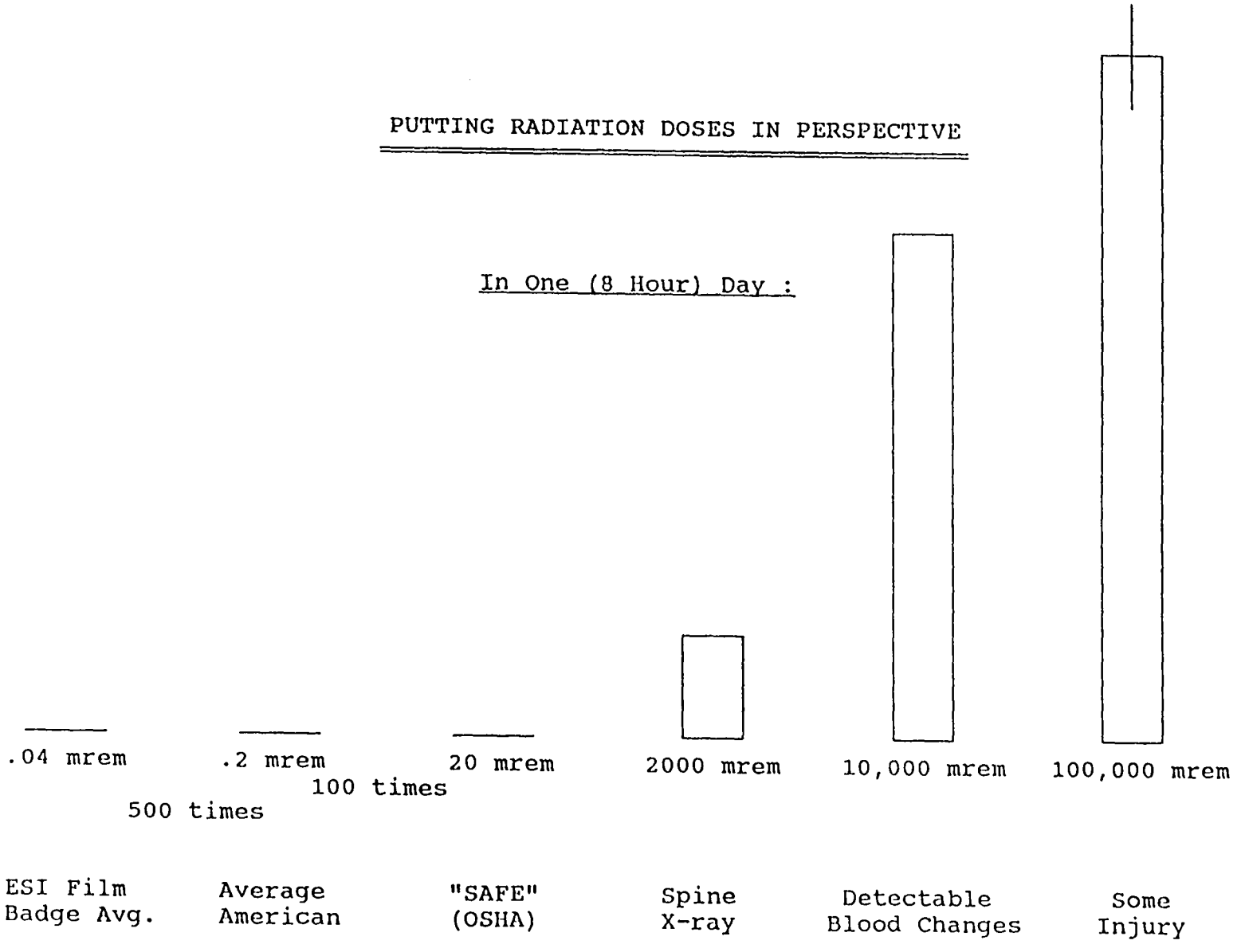
In One (8 Hour) Day :