EPA/600/A-95/069

PILOT-SCALE INCINERATION OF BALLISTIC MISSILE LIQUID PROPELLANT COMPONENTS

by

Larry R. Waterland and Shyam Venkatesh
Acurex Environmental Corporation
Incineration Research Facility
Jefferson, Arkansas 72079

Contract No. 68-C9-0038

Project Officer

Robert C. Thurnau
Waste Minimization, Destruction and Disposal Research Division
Risk Reduction Engineering Laboratory
Cincinnati, Ohio 45268

RISK REDUCTION ENGINEERING LABORATORY
OFFICE OF RESEARCH AND DEVELOPMENT
U.S. ENVIRONMENTAL PROTECTION AGENCY
CINCINNATI, OHIO 45268

GENERAL DISCLAIMER

This document may be affected by one or more of the following statements

- **This document has been reproduced from the best copy furnished by the sponsoring agency. It is being released in the interest of making available as much information as possible.**
- **This document may contain data which exceeds the sheet parameters. It was furnished in this condition by the sponsoring agency and is the best copy available.**
- **This document may contain tone-on-tone or color graphs, charts and/or pictures which have been reproduced in black and white.**
- **This document is paginated as submitted by the original source.**
- **Portions of this document are not fully legible due to the historical nature of some of the material. However, it is the best reproduction available from the original submission.**

TECHNICAL REPORT DATA

(Please read Instructions on the reverse before completing)

1. REPORT NO.	2.	3. RECIP
EPA/600/A-95/069		

4. TITLE AND SUBTITLE	5. REPORT DATE
PILOT-SCALE INCINERATION OF BALLISTIC MISSILE LIQUID PROPELLANT COMPONENTS	6. PERFORMING ORGANIZATION CODE
7. AUTHOR(S)	8. PERFORMING ORGANIZATION REPORT NO.
Larry Waterland and Shyam Venkatesh	
9. PERFORMING ORGANIZATION NAME AND ADDRESS	10. PROGRAM ELEMENT NO.
Acurex Environmental Corporation 555 Clyde Avenue Mountain View, CA 94039	11. CONTRACT/GRANT NO. 68-C9-0038
12. SPONSORING AGENCY NAME AND ADDRESS	13. TYPE OF REPORT AND PERIOD COVERED
RISK REDUCTION ENGINEERING LABORATORY–CINCINNATI, OH OFFICE OF RESEARCH AND DEVELOPMENT U.S. ENVIRONMENTAL PROTECTION AGENCY CINCINNATI, OHIO 45268	Research Paper - 1994 14. SPONSORING AGENCY CODE EPA/600/14

15. SUPPLEMENTARY NOTES Donald A. Oberacker 513/569-7510
To be published in the Proceedings of the International Incinerator Conference May 1995, Bellevue, Washington

16. ABSTRACT

The U.S. Department of Defense (DOD) recently concluded agreements with the Ukraine and the Russian Federation under which the DOD is committed to providing both former Soviet Union (FSU) states with equipment and other aid for use in eliminating their strategic offensive arms in accordance with schedules negotiated in the Strategic Arms Reduction Treaty. One specific need consists of process equipment to treat or destroy pure ballistic missile liquid propellant components as well as vapor or purge media contaminated by these components. The propellant components are unsymmetrical dimethylhydrazine (UDMH) fuel and nitrogen tetroxide (N_2O_4) oxidizer. Incineration is one possible treatment process. The Defense Nuclear Agency is responsible for providing the treatment/destruction process equipment. Should incinerators be provided, one requirement is that they meet the U.S. environmental regulatory requirements, as well as those of the respective FSU states. To supply data to demonstrate that incineration is a safe and effective treatment process, a series of tests was conducted at the U.S. Environmental Protection Agency's Incineration Research Facility.

17. KEY WORDS AND DOCUMENT ANALYSIS

a. DESCRIPTORS	b.IDENTIFIERS/OPEN ENDED TERMS	c. COSATI Field/Group
Hazardous Waste Incineration Rocket Propellant Destruction	UDMH N_2O_4 Incineration	

18. DISTRIBUTION STATE	19. SECURITY CLASS *(This Report)*	*21.* NO. OF PAGES
RELEASE TO PUBLIC	*UNCLASSIFIED*	22
	20. SECURITY CLASS *(This Report)* *UNCLASSIFIED*	22. PRICE

EPA Form 2220-1 (Rev. 4-77) PREVIOUS EDITION IS OBSOLETE

PILOT-SCALE INCINERATION OF BALLISTIC MISSILE LIQUID PROPELLANT COMPONENTS

Larry R. Waterland and Shyam Venkatesh
Acurex Environmental Corporation
Incineration Research Facility
Jefferson, Arkansas 72079

ABSTRACT

The U.S. Department of Defense (DoD) recently concluded agreements with the Ukraine and the Russian Federation under which the DoD is committed to providing both former Soviet Union (FSU) states with equipment and other aid for use in eliminating their strategic offensive arms in accordance with schedules negotiated in the Strategic Arms Reduction Treaty. One specific need consists of process equipment to treat or destroy pure ballistic missile liquid propellant components as well as vapor or purge media contaminated by these components. The propellant components are unsymmetrical dimethylhydrazine (UDMH) fuel and nitrogen tetroxide (N_2O_4) oxidizer. Incineration is one possible treatment process. The Defense Nuclear Agency is responsible for providing the treatment/destruction process equipment. Should incinerators be provided, one requirement is that they meet the U.S. environmental regulatory requirements, as well as those of the respective FSU states. To supply data to demonstrate that incineration is a safe and effective treatment process, a series of tests was conducted at the U.S. Environmental Protection Agency's Incineration Research Facility.

In the test program completed, the two propellant components were independently incinerated in separate sets of triplicate tests. All tests were performed at a primary combustion chamber exit gas temperature of nominally 980°C (1,800°F) and a secondary combustion chamber (afterburner) exit gas temperature of nominally 1,090°C (2,000°F). The test program results show that NO_x levels were in the range of 690 to 780 ppm at 7% O_2 at the primary combustion chamber exit during UDMH incineration; these were reduced to 410 to 500 ppm at 7% O_2 at the secondary combustion chamber exit, largely due to the dilution that accompanies the addition of the extra fuel and air required to raise the secondary chamber's temperature. Scrubber exit levels were similar to those at the secondary chamber exit, at 440 to 500 ppm at 7% O_2. NO_x levels were quite high for the N_2O_4 tests, at 9,300 to 10,000 ppm (uncorrected) at the primary chamber exit; 8,400 to 8,800 ppm, lowered again due to dilution, at the secondary chamber exit; and 5,900 to 7,100 ppm at the scrubber exit. Approximately 30 to 50% of the flue gas NO_x was NO_2, the lower fractions corresponding to the scrubber exit location.

No UDMH was measured at any flue gas location for any UDMH test; UDMH destruction and removal efficiencies (DREs) corresponding to the method detection limits (MDLs) were greater than 99.9997%. No cyanide, dimethylamine, tetramethyltetrazene, or N-nitrosodimethylamine, all postulated UDMH combustion byproducts, were measured at any flue gas sampling location for any UDMH test. Flue gas formaldehyde levels ranged from 2 to 8 μg/dscm at all three sampled locations for the UDMH tests. Total dioxin and furan levels measured at the scrubber exit were 0.45 ng/dscm at 7% O_2 for one UDMH test and 0.13 to 0.36 ng/dscm at 7% O_2 over three N_2O_4 tests. In terms of 2,3,7,8-tetrachlorodibenzo-p-dioxin toxicity equivalents, the scrubber exit flue gas levels were 0.02 ng/dscm for the UDMH test, and 0.01 to 0.02 ng/dscm for the three N_2O_4 tests.

INTRODUCTION

The U.S. Department of Defense (DoD) recently concluded agreements with the Ukraine and the Russian Federation under which the DoD is committed to providing both former Soviet Union (FSU) states with equipment and other aid for use in eliminating their strategic offensive arms

(SOA) in accordance with schedules negotiated in the Strategic Arms Reduction Treaty (START). The agreement with the Ukraine specifically includes supplying this FSU state with mobile and transportable single-trailer incinerators for use in destroying either pure components or the vapor or purge media contaminated by the two propellant components, unsymmetrical dimethylhydrazine (UDMH) and nitrogen tetroxide (N_2O_4), used in FSU land-based and submarine-launched ballistic missiles. The agreement with the Russian Federation requires supplying liquid propellant component treatment or destruction process equipment, while not specifically requiring the process to be incineration. Nevertheless, incineration may be the process selected.

The Defense Nuclear Agency (DNA) is responsible for providing the treatment/destruction process equipment. Should incinerators be provided, one requirement is that they meet both the U.S. environmental regulatory requirements, as well as those of the respective FSU states. Thus, to supply the data to demonstrate that purge media contaminated by either compound, or that pure UDMH or N_2O_4 can be effectively destroyed by incineration while complying with the requisite environmental regulations, DNA funded a series of incineration tests at the U.S. Environmental Protection Agency's (EPA's) Incineration Research Facility (IRF), located in Jefferson, Arkansas.

The general objectives of the test program performed were to demonstrate the U.S. and FSU environmental certifiability of the incineration of FSU ballistic missile fuel UDMH and ballistic missile oxidizer N_2O_4. Environmental certifiability was to be established by showing that both UDMH and N_2O_4 can be separately destroyed in an incinerator to levels which meet both U.S. and FSU state environmental regulations, while resulting in emissions of incineration byproducts considered acceptable under those regulations.

TEST PROGRAM

The test program was conducted in the IRF rotary kiln incineration system (RKS). Fig. 1 is a process schematic of the RKS as it was configured for these tests. However, because very little flue gas particulate was expected from the incineration of either component of the ballistic missile liquid propellant, the baghouse system shown in Fig. 1 was bypassed.

PLACE FIG. 1 HERE

Environmental Regulations

As noted above, the objectives of the test program were to establish that UDMH and N_2O_4 can be destroyed in an incineration system in a manner that meets U.S. and FSU state environmental regulations. The applicable U.S. environmental regulations are the hazardous waste incinerator performance standards established under the Resource Conservation and Recovery Act (RCRA). The applicable provisions of these standards require that the incinerator achieve at least a 99.99% destruction and removal efficiency (DRE) of the principal organic hazardous constituents (POHCs) in the waste feed to the incinerator. For UDMH fuel, the POHC would be UDMH. N_2O_4 is not an organic constituent, so no N_2O_4 DRE requirement would apply.

In addition to the DRE specification, hazardous waste incinerator permits currently being enforced in the U.S. require that CO emissions be no greater than a 1-hour rolling average of 100 ppm, corrected to 7% O_2.

The Russian environmental regulations limit the emissions of UDMH and several potential UDMH products of incomplete combustion (PICs) from the incineration of UDMH. These limits are summarized in Table I. Ukrainian regulations are essentially the same. The limits noted in the table are occupational exposure limits in terms of maximum permissible concentrations in workplace air.

PLACE TABLE I HERE

The U.S. incinerator standard of 100 ppm CO, 1-hour rolling average at 7% O_2, equates to an emission concentration of 183 mg/dscm at 7% O_2. Thus, only about a 10-fold dilution of stack emissions into ambient air would be needed to meet the Russian workplace standard of 20 mg/m^3. Typical stack to maximum ambient concentration dilution factors are much larger, generally 100 to several thousand.

The U.S. hazardous waste incinerator standards do not address NO_x emissions. However, the new source performance standard (NSPS) for large municipal waste incinerators (greater than 250 tons/day [227 Mg/day] capacity), established under the Federal Clean Air Act, is 180 ppm NO_x at 7% O_2. This equates to 265 mg/Nm^3 as NO_2 at 7% O_2. About a 130-fold dilution of stack emissions of 265 mg/Nm^3 would satisfy the Russian workplace standard for NO_2. This is at the lower bound of typical dilution factors, as noted above.

In summary, the specific test program objectives were:

- To develop the data to evaluate whether UDMH and N_2O_4 can be incinerated in compliance with the U.S. hazardous waste incinerator performance standards and recent permitting guidance of:
  - 99.99% UDMH DRE
  - CO emissions of less than 100 ppm 1-hour rolling average at 7% O_2
- To develop CO and NO_x (NO plus NO_2) emission rate data from the incineration of UDMH and N_2O_4 for comparison to the U.S. hazardous waste incinerator permit guidance limits and the NSPS for large municipal waste incinerators
- To develop UDMH PIC emission rate data from the incineration of UDMH for comparison to the emission rate limits corresponding to the Russian occupational exposure limits

Additional test program objectives were:

- To develop polychlorinated dibenzo-p-dioxin and polychlorinated dibenzofuran (PCDD/PCDF) emission rate data from the incineration of UDMH and N_2O_4
- To develop trace metal emission rate data from the incineration of N_2O_4 to verify expectation that metal emissions are insignificant

Test Conditions

The test program consisted of nine incineration tests. Three tests (triplicate testing) were performed under the same incineration system operating conditions feeding each component of the missile propellant. Two sets of triplicate tests feeding UDMH (six total) were required to complete all the flue gas sampling procedures planned for the UDMH feed tests, as noted below. Thus, nine tests in total, six feeding UDMH and three feeding N_2O_4, were performed.

The six UDMH destruction tests were performed at a nominal kiln exit gas temperature of 980°C (1,800°F). Only UDMH was fed to the kiln along with the required combustion air. UDMH was fed via the liquid waste/fuel nozzle of the kiln's dual fuel burner. The UDMH was directly pumped and metered from its nitrogen-blanketed storage container to the burner nozzle via a UDMH feed system custom-fabricated at the IRF for these tests. Fig. 2 is a schematic of this feed system. The

key feature of the system is the substitution of nitrogen as the atomization fluid for the RKS air-atomized burners. This substitution provided an extra precaution against any UDMH explosion in the burner feed system.

PLACE FIG. 2 HERE

The three N_2O_4 destruction tests were also performed at kiln exit gas temperature of 980°C (1,800°F). Diesel fuel served as the material to be oxidized by N_2O_4 for its destruction. The diesel fuel was fed to the kiln via the liquid nozzle of the kiln's dual fuel burner. The N_2O_4 oxidant was added to the burner primary air supply via an N_2O_4 feed system, also custom-fabricated at the IRF for the tests. Fig. 3 is a schematic of this system. The key feature of this system is the use of an electrically heated evaporator to vaporize the N_2O_4 prior to its addition to the combustion air.

PLACE FIG. 3 HERE

For all nine tests, the RKS afterburner was fired with natural gas to maintain a nominal afterburner exit gas temperature of 1,090°C (2,000°F).

Sampling and Analysis Procedures

The RKS sampling locations and the scope of the sampling effort are shown in the process schematic given in Fig. 4. For all tests, the sampling matrix defined to meet the test program objectives listed above included:

PLACE FIG. 4 HERE

- Obtaining a composite sample of the pre-test and post-test scrubber system liquor
- Continuously measuring O_2, CO, NO_x, and TUHC concentrations in the kiln exit flue gas; O_2, CO_2, and NO_x concentrations in the afterburner exit flue gas; O_2, CO_2, and NO_x concentrations in the scrubber exit flue gas; and O_2 and CO concentrations in the stack gas
- Sampling flue gas at the scrubber exit for PCDDs/PCDFs using Method 23[1]
- Sampling flue gas at the scrubber exit and the stack for particulate and HCl using Method 5[2]; the stack gas sample was needed to comply with the IRF's permit requirements

Additional sampling procedures were performed for the UDMH incineration tests. These were:

- Sampling flue gas at the kiln exit, afterburner exit, and scrubber exit for:
  - UDMH and dimethylamine using a variation of the National Institute for Occupational Safety and Health (NIOSH) Method S143[3]
  - N-nitrosodimethylamine and 1,1,4,4-tetramethyl-2-tetrazene (tetramethyltetrazene) using Method 0010[4]
  - HCN using a modified California Air Resources Board (CARB) Method 426[5]
  - Formaldehyde using Method 0011[1]
- For the N_2O_4 tests, sampling the scrubber flue gas exit for trace metals using the EPA multiple metals train[1]

Measurements of NO_x, UDMH, and UDMH PICs were specified at the three locations noted, specifically to supply data to allow evaluating the need for a secondary combustion chamber (afterburner) and/or a wet scrubber APCS in the units potentially supplied to the FSU states. The number of sampling procedures specified for the UDMH tests could not be performed simultaneously at the IRF due to the unavailability of sampling ports in all the locations specified. Thus, the UDMH sampling matrix was completed over two sets of tests. The procedures denoted U1 in Fig. 4 were simultaneously completed over one set of three test days; the procedures denoted U2 in the figure were completed during a second set of three test days.

TEST RESULTS

Table II summarizes the RKS operating conditions for the six UDMH tests performed. Table III presents an analogous summary for the N_2O_4 tests. As shown, incineration conditions for all nine tests were quite close to the test target temperatures of 980°C (1,800°F) at the kiln exit and 1,090°C (2,000°F) at the afterburner exit. All six UDMH tests destroyed nominally 45 kg/hr (100 lb/hr) of UDMH. Each of the three N_2O_4 tests destroyed nominally 64 kg/hr (140 lb/hr) of N_2O_4 using nominally 32 kg/hr (70 lb/hr) of diesel fuel.

PLACE TABLES II AND III HERE

Table IV summarizes the CEM data for the UDMH tests. As shown in the table, both CO and TUHC levels at the kiln exit were low, at <2 ppm and about 1 ppm, respectively. NO_x levels at the kiln exit ranged from 693 to 781 ppm at 7% O_2, with a six-test average of 733 ppm. Afterburner exit NO_x levels lower, at 414 to 500 ppm at 7% O_2, with a six-test average of 462 ppm at 7% O_2. However, these lower afterburner exit concentrations can be shown to result from flue gas dilution by the CO_2 and N_2 added to the flue gas resulting from the extra auxiliary fuel burned in the afterburner to raise its gas temperature. Original hopes were that some true NO_x reduction via reburning mechanisms would occur in the afterburner. To increase the probability that this would occur, the afterburner burner was fired as fuel rich as possible. Despite this, no true NO_x reduction in the afterburner was achieved. In fact, additional NO_x was produced in the afterburner during these tests. However, the additional dilution gas introduced in the afterburner more than compensated for the extra NO_x produced, so that NO_x concentrations were decreased in the afterburner exit gas.

PLACE TABLE IV HERE

NO_x levels at the scrubber exit were comparable to those at the afterburner exit, ranging from 449 to 497 ppm at 7% O_2, with a six-test average of 480 ppm at 7% O_2. Because essentially all the NO_x measured for the UDMH tests was as NO (no difference in NO_x monitor reading was observed when going from an NO measurement to a total NO_x measurement), this is as expected.

All NO_x levels measured were substantially greater than the target level of 180 ppm at 7% O_2. About a 75% reduction in the kiln exit NO_x levels measured would be needed to reach the 180 ppm target. The corresponding reduction needed to reach the target from the afterburner and scrubber exit levels measured is about 60%. Some low-NO_x burner concepts may be capable of achieving these reduction levels, but their applicability to UDMH combustion is uncertain given the safety considerations UDMH combustion demands. Non-catalytic NO_x reduction processes, such as ammonia or urea injection, might also be effective, though 70% NO_x reductions are about the limit of effectiveness for these approaches.

Table V summarizes the CEM data from the three N_2O_4 destruction tests. Again, kiln exit CO levels were low, at less than 2 ppm, for two of the three N_2O_4 tests. For some unknown reason the average kiln exit CO level for the third test was substantially higher at 60 ppm. Kiln exit TUHC

levels, at 15 to 16 ppm, were higher for the N_2O_4 tests than were measured for the UDMH tests, although even these higher levels are common from industrial combustion sources.

PLACE TABLE V HERE

The NO_x concentrations measured at all three flue gas locations for the N_2O_4 tests were extremely high. Levels measured ranged from 18,000 to 20,600 ppm at 7% O_2 at the kiln exit, with a three-test average of 19,300 ppm; from 12,200 to 13,300 ppm at 7% O_2 at the afterburner exit; and from 10,600 to 12,200 ppm at 7% O_2 at the scrubber exit. Again, the afterburner exit NO_x levels were apparently reduced from those measured at the kiln exit. However, as was the case for the UDMH tests, and as discussed below, additional NO_x was produced in the afterburner; the addition of diluent CO_2 and N_2 from the afterburner burner operation more than compensated for the additional NO_x produced, so that the afterburner exit NO_x concentrations were reduced from kiln exit concentrations.

The data in Table V further show that a significant fraction of the flue gas NO_x measured at all three locations was NO_2. Of course this would be expected given that N_2O_4 is the dimer of NO_2. The data in Table V indicate that about 50% of the kiln exit NO_x was NO_2 for two of the three N_2O_4 tests; a lower fraction, about 40%, was measured for the third test. NO_2 fractions at the afterburner exit were lower, at about 35%. This would be expected because the additional NO_x formed in the afterburner would be combustion-generated NO. Thus, the afterburner adds NO_x in the form of NO to the combustion gas; the NO_x amount increases, but the NO_2 fraction decreases. At the scrubber exit the NO_2 fractions were slightly lower still, at about 30%. This would be expected if the scrubber system removed some of the more soluble NO_2. Apparently some removal may have occurred as evidenced by the decrease in NO_x concentrations, corrected to 7% O_2, from the afterburner exit to the scrubber exit for Test 3.

Unfortunately, a complete picture of flue gas NO_x levels for the N_2O_4 tests cannot be discussed, because for two of the three tests performed, one of the three NO_x monitors in use malfunctioned, as noted in Table V. Of course, in retrospect perhaps this might have been expected. The extremely high flue gas NO_x levels present in the tests presented a severe and challenging environment to the monitors used, so that more frequent malfunction might be expected.

The very high NO_x levels measured in the flue gas for these tests clearly suggests that N_2O_4 destruction was not complete. The N_2O_4 DREs achieved for these tests are summarized in Table VI. The DREs given in the table are based on the measured flue gas NO_2 concentrations only, thus giving "destruction credit" to any partial reduction of NO_2 to NO. The data in Table VI show that the N_2O_4 (or NO_2) DREs achieved were essentially 90% for all the tests as measured at all three flue gas locations sampled.

PLACE TABLE VI HERE

The very high levels of NO_x measured at all locations for the N_2O_4 destruction tests suggest that meeting a 180 ppm at 7% O_2 standard when destroying N_2O_4 cannot be achieved. Measured kiln exit levels would require over 99% reduction to meet the 180 ppm level; measured afterburner exit and scrubber exit levels would require greater than 98% reduction. The most effective NO_x control techniques are selective catalytic reduction approaches using ammonia. These processes offer no better than 95% NO_x reductions Further, they require ammonia addition as a reducing agent, an aspect that would greatly complicate the operation of a transportable incinerator at a remote FSU operation site.

Table VII summarizes the test data on the flue gas concentrations of other constituents of interest measured in the first set of UDMH incineration tests. Data on flue gas concentrations of UDMH,

dimethylamine, and formaldehyde are given in Table VII. As shown in the table, the concentrations of UDMH and dimethylamine were less than method destruction limits (MDLs) at all three flue gas locations sampled. Some formaldehyde was measured at the afterburner exit and scrubber exit locations at levels between 9.4 and 8.0 μg/dscm. A comparable level at 7.2 μg/dscm was measured for one test at the kiln exit.

PLACE TABLE VII HERE

The UDMH MDLs can be used to set a lower bound on the UDMH DREs achieved for the tests. These are also shown in Table VII. As indicated, UDMH DREs achieved were greater than 99.9997% in all cases at all locations, well above the 99.99% level required under the current hazardous waste incinerator performance standards.

Table VIII summarizes the flue gas concentrations of other constituents of interest measured during the second set of UDMH incineration tests. Data on cyanide, N-nitrosodimethylamine, and tetramethyltetrazene are given. As shown, none of the three constituents was found in the flue gas at any sampled location for any test at the MDLs noted in the table.

PLACE TABLE VIII HERE

Table IX summarizes the PCDD/PCDF concentrations measured in the scrubber exit flue gas for the one UDMH incineration test sampled and for the three N_2O_4 destruction tests. As shown, total PCDD/PCDF concentrations for all four tests were comparable and quite low, in the 0.13 to 0.45 ng/dscm at 7% O_2 range. These levels are far below the 1993 EPA guidance target of 30 ng/dscm at 7% O_2. On a 2,3,7,8-tetrachlorodibenzo-p-dioxin (2,3,7,8-TCDD) toxicity equivalent (TEQ) basis, measured concentrations were 0.01 to 0.02 ng/dscm at 7% O_2. These levels would similarly be far below the European target of 0.1 ng/Nm^3 TEQ at 11% O_2, dry.

PLACE TABLE IX HERE

Scrubber exit flue gas concentrations of antimony, arsenic, barium, beryllium, cadmium, chromium, cobalt, lead, manganese, nickel, silver, thallium, tin, and vanadium were measured for the N_2O_4 destruction tests. None except lead was found in any test at the method detection limits given in Table X. Lead was found in the flue gas for two tests at 17 and 31 μg/dscm, respectively.

PLACE TABLE X HERE

CYANIDE METHOD VALIDATION

As noted above, one of the flue gas emission analytes of great interest for UDMH incineration was total cyanide. The traditional method for collecting cyanide from a gas stream is absorption into a basic absorption solution such as 0.1N NaOH. This is the basis for California Air Resources Board (CARB) Method 426.[5] However, if the gas stream contains CO_2, as does all combustion process flue gas, some CO_2 will also be absorbed and, if equilibrium is reached, form a carbonate buffer solution. The flue gas CO_2 levels measured at the afterburner exit for the UDMH tests were in the 4 to 6% range. The pH of an initial 0.1N NaOH solution in equilibrium with a gas stream containing these levels of CO_2 is about 8. The pK_a of HCN is 9.3, so HCN would be purged out of an initial 0.1N NaOH impinger solution if equilibrium with the purging gas CO_2 concentration is reached. Thus, it is possible that any cyanide in a flue gas stream containing 4 to 6% CO_2 would not remain collected in an impinger initially containing 0.1N NaOH, because the collection solution may become acidified by dissolving CO_2 to the point that any collected cyanide would revert to HCN gas and be purged.

Increasing the pH of the initial impinger solution by using 1.0N NaOH would help offset the buffering capacity of dissolving CO_2, but the equilibrium pH of an initial 1.0N NaOH solution under a 4 to 6% CO_2-containing gas is about 9, still below the pK_a of HCN. Only by starting with an impinger solution containing 10N NaOH would there be certainty that, if equilibrium with the flue gas CO_2 is reached, the final pH of the resulting solution remains sufficiently basic to retain cyanide. The equilibrium pH of an initial 10N NaOH solution under a 4 to 6% CO_2-containing gas is about 10.

CARB Method 426 recommends substituting 0.1M $NaHCO_3$ for the 0.1N NaOH absorbing solution "in the case of sources which produce significant levels of CO_2." However, the basis for this recommendation cannot be understood in light of the above discussion. Other absorbing reagent systems have been proposed for cyanide capture. For example, the former Texas Air Control Board (TACB) specified 2% zinc acetate as the cyanide collection solution.[6] A 2% zinc acetate solution is initially basic; however, with CO_2 dissolution, this solution would also acidify.

Given the uncertainty over whether documented methods for measuring cyanide in gas stream discharges would function as intended for gas streams containing 4 to 6% CO_2, it was decided to conduct a method validation study. In the study, sampling trains as described in CARB Method 426 were set up to sample scrubber exit flue gas from the RKS fired with natural gas auxiliary fuel. The six different reagent systems listed in Table XI were tested. Validation study results are also summarized in Table XI. As indicated, only the 10N NaOH impinger charging solution yielded acceptable cyanide capture and retention. In contrast, the two charging solutions recommended in CARB Method 426 produced no cyanide recovery. The TACB method and a modification to this method recommended for use in gas streams containing H_2S (the use of lead acetate as the initial impinger solution) gave measurable, but poor, cyanide recoveries.

PLACE TABLE XI HERE

CONCLUSIONS

Test program results show that:

- NO_x levels were in the range of 690 to 780 ppm at 7% O_2 at the primary combustion chamber exit while incinerating UDMH; these were reduced to 410 to 500 ppm at 7% O_2 at the secondary combustion chamber exit, due largely to the dilution that accompanies the addition of the extra fuel and air required to raise the secondary chamber's temperature. Scrubber exit levels were similar to afterburner exit levels, at 440 to 500 ppm at 7% O_2.

- NO_x levels were quite high for the N_2O_4 tests, at 9,300 to 10,000 ppm (uncorrected) at the primary chamber exit; 8,400 to 8,800 ppm, lowered again due to dilution, at the secondary chamber exit; and 5,900 to 7,100 ppm at the scrubber exit. Approximately 30 to 50% of the flue gas NO_x was NO_2, the lower fractions corresponding to the scrubber exit location. The lower total NO_x levels and the lower NO_2 fractions at the scrubber exit location are likely due to some removal of NO_2 by the wet scrubber.

- No UDMH was measured at any flue gas location for any UDMH test; UDMH DREs corresponding to the MDLs were uniformly greater than 99.9997%.

- No cyanide, dimethylamine, tetramethyltetrazene, or N-nitrosodimethylamine, all postulated UDMH combustion byproducts, were measured at any flue gas sampling location for any UDMH test. Corresponding MDLs were 30 μg/dscm for cyanide; 300

to 800 μg/dscm, depending on sampled location, for dimethylamine; 3 μg/dscm for tetramethyltetrazene; and 5 μg/dscm for N-nitrosodimethylamine.

- Flue gas formaldehyde levels ranged from 2 to 8 μg/dscm at all three sampled locations for the UDMH tests.

- Total PCDD/PCDF levels measured at the scrubber exit were 0.45 ng/dscm at 7% O_2 for the one UDMH test for which they were measured; levels measured for the three N_2O_4 tests were 0.13 to 0.36 ng/dscm at 7% O_2. In TEQ terms, the scrubber exit flue gas levels were 0.02 ng/dscm for the UDMH test, and 0.01 to 0.02 ng/dscm at 7% O_2 for the three N_2O_4 tests.

- None of the 14 trace metals sought in the N_2O_4 tests were found in the scrubber exit flue gas with the exception of low levels (17 to 30 μg/dscm) of lead.

In addition, during method validation tests performed as part of this test program, it was found that the routinely used sampling procedures for cyanide, particularly those documented by the TACB and the CARB, failed to capture and retain cyanide from a gas stream that contains CO_2 levels of 4 to 6%, such as typical combustion source flue gas.

ACKNOWLEDGEMENTS

The test program described in this paper was performed under EPA Contract 68-C9-0038. Funding for the test program was provided by DNA under two Interagency Cost Reimbursement Orders (IACROs), IACRO 93-691, Work Unit 00005, and IACRO 94-7615. This paper has been subjected to both EPA and DNA review, and has been approved for publication.

REFERENCES

1. 40 CFR Part 266, Appendix IX.

2. 40 CFR Part 60, Appendix A.

3. P. M. ELLER, ed., "NIOSH Manual of Analytical Methods," Third Edition, February 1984, with Supplements 1, 2, 3, and 4 (1985, 1987, 1989, 1990).

4. "Test Methods for Evaluating Solid Waste: Physical/Chemical Methods," EPA SW-846, Third Edition, Revision 1, (July 1992).

5. "Stationary Source Test Methods, Volume III, Methods for Determining Emissions of Toxic Air Contaminants from Stationary Sources," CARB, Sacramento, California (Mar. 1988).

6. "Texas Air Control Board Sampling Procedures Manual," TACB, Austin, Texas (Jan. 1983).

FIGURE CAPTIONS:

Fig. 1. Schematic of the IRF rotary kiln incineration system.

Fig. 2. UDMH feed system schematic.

Fig. 3. N_2O_4 feed system schematic.

Fig. 4. Test sampling locations.

TABLE I
Russian Federation Environmental Regulations for UDMH Incineration

Compound	Maximum Permissible Concentration in Workplace Air, mg/m^3
UDMH	0.1
Dimethylamine	1.0
N-Nitrosodimethylamine	0.001
Hydrogen cyanide (HCN)	0.3
1,1,4,4-Tetramethyl-2-tetrazene	3.0
Formaldehyde	0.5
CO	20
NO_2	2.0

TABLE II
Test Operating Conditions for UDMH Tests

Test No.	Test Date	UDMH Feedrate, kg/hr (lb/hr)	Average Kiln Exit Conditions		Average Afterburner Exit Conditions	
			Temperature, °C (°F)	O_2, %	Temperature, °C (°F)	O_2, %
1	(2/1/94)	47 (104)	994 (1,821)	12.6	1,107 (2,024)	9.1
2	(2/3/94)	47 (103)	992 (1,817)	11.9	1,097 (2,007)	9.2
3	(2/15/94)	44 (96)	981 (1,797)	11.4	1,097 (2,007)	9.5
4	(2/23/94)	41 (91)	981 (1,797)	11.1	1,097 (2,007)	8.7
5	(2/24/94)	42 (92)	982 (1,800)	11.4	1,097 (2,007)	9.3
6	(3/1/94)	44 (97)	977 (1,791)	11.1	1,097 (2,007)	9.4

TABLE III
Test Operating Conditions for N_2O_4 Tests

Test	Feedrate, kg/hr (lb/hr)		Average Kiln Exit Conditions		Average Afterburner Exit Conditions	
	N_2O_4	Diesel Fuel	Temperature, °C (°F)	O_2, %	Temperature, °C (°F)	O_2, %
1 (3/24/94)	61 (135)	27 (60)	979 (1,795)	13.8	1,097 (2,007)	10.8
2 (3/30/94)	65 (142)	33 (72)	980 (1,796)	13.8	1,098 (2,008)	11.4
3 (4/5/94)	67 (147)	33 (72)	985 (1,805)	14.2	1,098 (2,008)	11.7

TABLE IV
CEM Data for the UDMH Tests

Parameter	Test 1 (2/1/94)	Test 2 (2/3/94)	Test 3 (2/15/94)	Test 4 (2/23/94)	Test 5 (2/24/94)	Test 6 (3/1/94)
Kiln exit						
CO, ppm	<2	<2	<2	<2	<2	<2
TUHC, ppm as propane	1.5	1.3	1.1	1.3	1.0	1.3
NO_x, ppm	456	453	490	520	489	490
NO_x, ppm at 7% O_2	781	702	738	761	724	693
Afterburner exit						
NO_x, ppm	427	403	383	442	418	353
NO_x, ppm at 7% O_2	497	414	463	478	500	421
Scrubber exit						
NO_x, ppm	314	305	314	349	335	301
NO_x, ppm at 7% O_2	486	473	489	497	485	449

TABLE V
CEM Data for the N_2O_4 Tests

Parameter	Test 1 (3/24/94)	Test 2 (3/30/94)	Test 3 (4/5/94)
Kiln exit			
CO, ppm	<2	<2	60
TUHC, ppm as propane	15	16	15
NO_x, ppm	9,720	9,860	10,010
NO_x, ppm at 7% O_2	18,020	19,170	20,610
NO, ppm	4,220	4,690	6,100
NO_2, ppm	5,050	5,170	3,910
NO_2/NO_x, %	54	52	39
Afterburner exit			
NO_x, ppm	—[a]	8,390	8,800
NO_x, ppm at 7% O_2	—	12,230	13,250
NO, ppm	—	5,180	5,850
NO_2, ppm	—	3,110	2,950
NO_2/NO_x, %	—	37	34
Scrubber exit			
NO_x, ppm	5,880	—	6,860
NO_x, ppm at 7% O_2	10,550	—	12,160
NO, ppm	4,190	—	4,800
NO_2, ppm	1,690	—	2,060
NO_2/NO_x, %	29	—	30

[a]— = Malfunctioning monitor.

TABLE VI
N_2O_4 DREs

Parameter	Test 1 (3/24/94)	Test 2 (3/30/94)	Test 3 (4/5/94)
N_2O_4 feedrate, kg/hr	61	65	67
Kiln exit			
Flue gas flowrate, dscm/hr	750	770	770
NO_2			
Concentration, g/dscm as NO_2	9.7	9.9	7.5
Emission rate, kg/hr	7.2	7.6	5.7
DRE, %	88	88	91
Afterburner exit			
Flue gas flowrate, dscm/hr	1,060	1,130	1,350
NO_2			
Concentration, g/dscm as NO_2	—[a]	6.0	5.6
Emission rate, kg/hr	—	6.7	7.6
DRE, %	—	90	89
Scrubber exit			
Flue gas flowrate, dscm/hr	1,930	1,840	1,770
NO_2			
Concentration, g/dscm as NO_2	3.2	—	3.9
Emission rate, kg/hr	6.3	—	7.0
DRE, %	90	—	90

[a]— = Malfunctioning monitor.

TABLE VII
Flue Gas Hazardous Constituent Concentrations for the UDMH Set 1 Tests

Parameter	Test 1 (2/1/94)	Test 2 (2/3/94)	Test 3 (2/15/94)
Kiln exit			
Concentrations:			
UDMH, μg/dscm	<40	<40	<40
Dimethylamine, μg/dscm	<440	<380	<410
Formaldehyde, μg/dscm	7.2	<0.23	<1.1
UDMH DRE, %	>99.99991	>99.99993	<99.99993
Afterburner exit			
Concentrations:			
UDMH, μg/dscm	<50	<50	<40
Dimethylamine, μg/dscm	<460	<280	<410
Formaldehyde, μg/dscm	6.8	2.4	4.3
UDMH DRE, %	>99.99982	>99.99988	>99.99983
Scrubber exit			
Concentrations:			
UDMH, μg/dscm	<80	<70	<70
Dimethylamine, μg/dscm	<770	<700	<710
Formaldehyde, μg/dscm	6.5	8.0	8.0
Particulate, mg/dscm at 7% O_2	4	4	30
UDMH DRE, %	>99.99974	>99.99976	>99.99973

TABLE VIII
Flue Gas Hazardous Constituent Concentrations for the UDMH Set 2 Tests

Parameter	Test 4 (2/23/94)	Test 5 (2/24/94)	Test 6 (3/1/94)
Kiln exit concentrations			
Cyanide, μg/dscm	<40	<30	<30
N-nitrosodimethylamine, μg/dscm	<5	<5	<5
Tetramethyltetrazene, μg/dscm	<3	<3	<3
Afterburner exit concentrations			
Cyanide, μg/dscm	<30	<30	<30
N-nitrosodimethylamine, μg/dscm	<5	<5	<5
Tetramethyltetrazene, μg/dscm	<3	<3	<3
Scrubber exit concentrations			
Cyanide, μg/dscm	<30	<30	<30
N-nitrosodimethylamine, μg/dscm	<5	<5	<5
Tetramethyltetrazene, μg/dscm	<3	<3	<3

TABLE IX
Scrubber Exit Flue Gas PCDD/PCDF Concentrations

Parameter	UDMH	N_2O_4 Tests		
	Test 2 (2/3/94)	Test 1 (3/24/94)	Test 2 (3/30/94)	Test 3 (4/5/94)
Scrubber exit flue gas PCDD/PCDF concentration, ng/dscm at 7% O_2				
Total	0.45	0.27	0.13	0.36
TEQ	0.02	0.02	0.01	0.01

TABLE X
Flue Gas Trace Metal Concentration Method Detection Limits

Metal	Detection Limit, µg/dscm	Metal	Detection Limit, µg/dscm
Sb	12	Pb	15
As	21	Mn	1.0
Ba	1.0	Ni	4.0
Be	0.1	Ag	3.0
Cd	1.0	Tl	15
Cr	3.0	Sn	89
Co	17	V	3.0

TABLE XI
Cyanide Sampling Train Validation Results

Reagent System	Reference	1st Absorbing Solution	2nd Absorbing Solution	CN Recovery, %
1	CARB 426,[5] standard procedure	0.1N NaOH	0.1N NaOH	<0.2
2	CARB 426,[5] option for high CO_2	0.1M $NaHCO_3$	0.1M $NaHCO_3$	<0.2
3	CARB 426,[5] increase pH	1.0N NaOH	1.0N NaOH	<0.2
4	CARB 426,[5] further increase pH	10N NaOH	10N NaOH	106
5	TACB,[6] standard procedure	2% $Zn(CH_3COO)_2$	2% $Zn(CH_3COO)_2$	28
6	TACB,[6] option for high H_2S	Saturated Pb $(CH_3COO)_2$	2% $Zn(CH_3COO)_2$	14

Fig. 1. Schematic of the IRF rotary kiln incineration system.

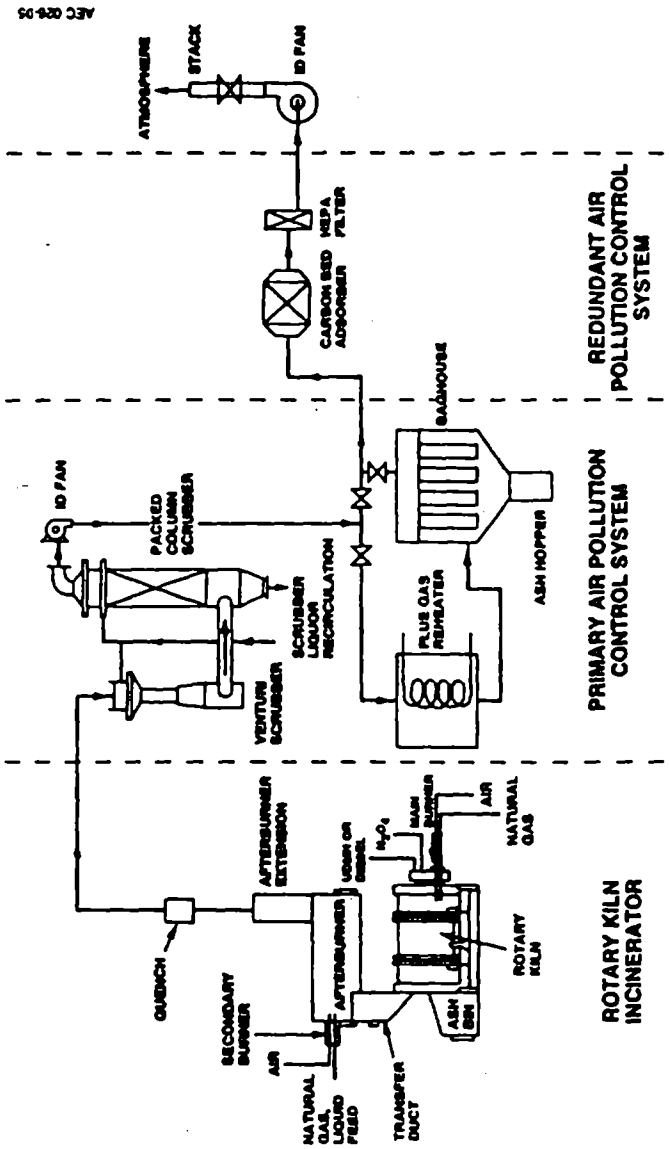

Fig. 2. UDMH feed system schematic.

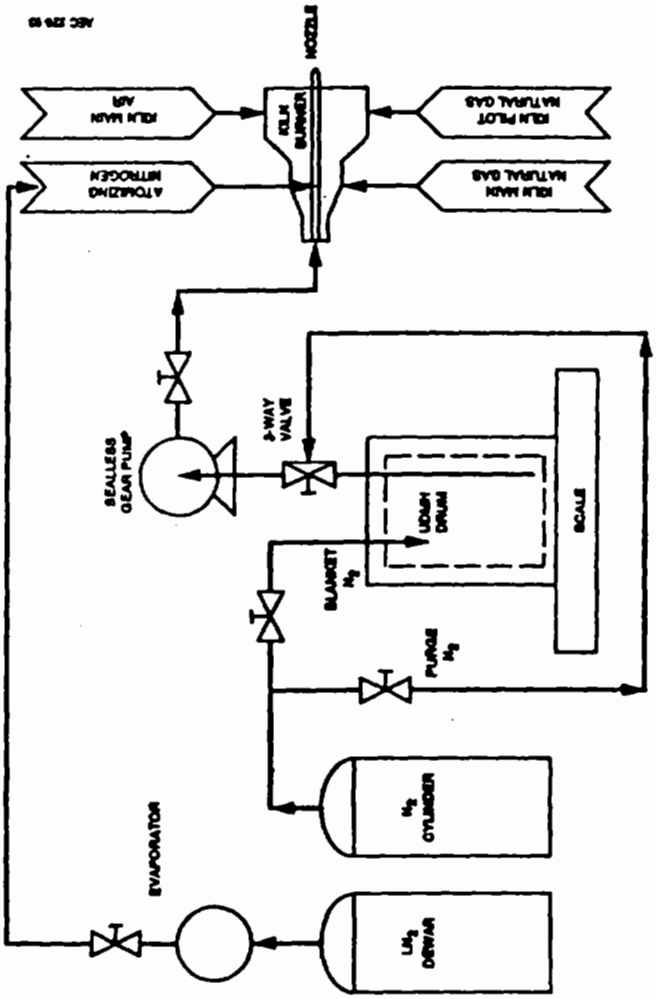

Fig. 3. N_2O_4 feed system schematic.

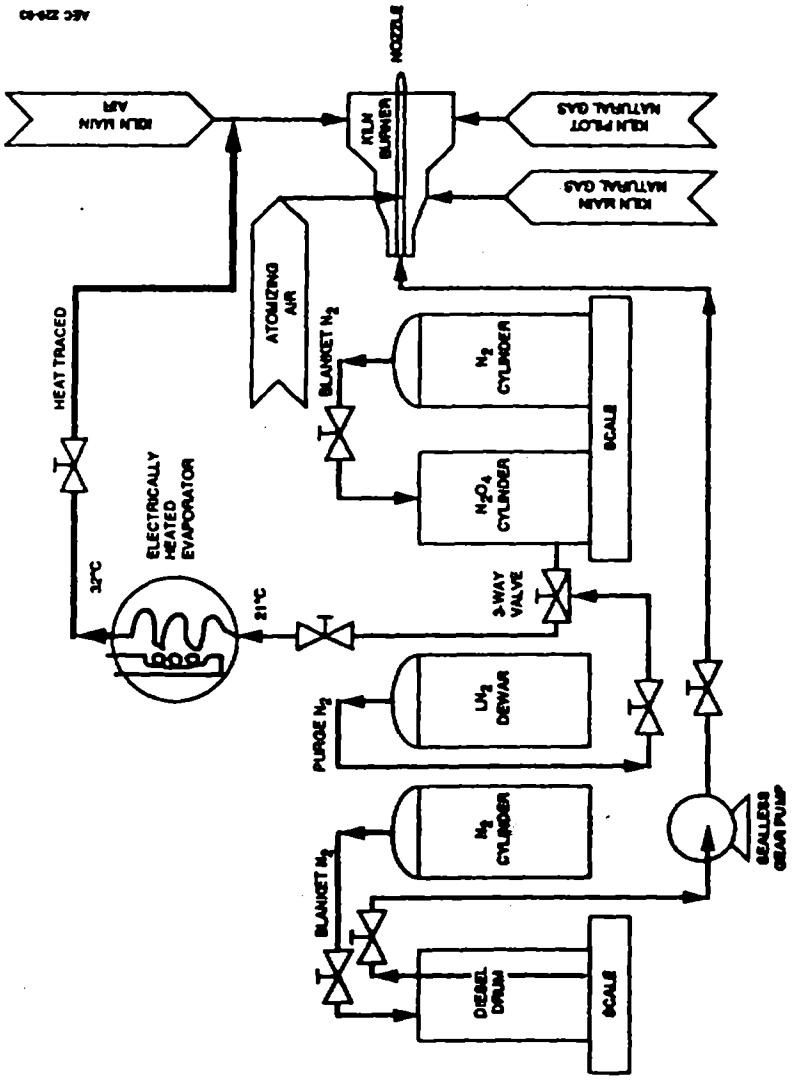

Fig. 4. Test sampling locations.

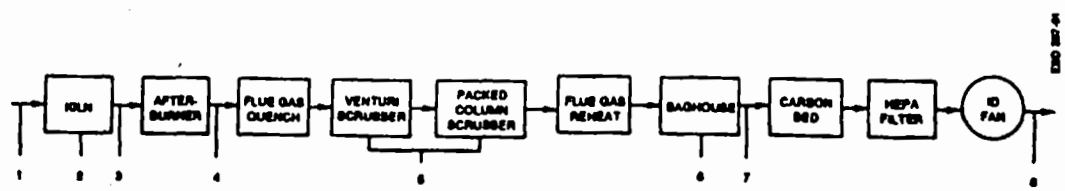

Sampling point	Scrubber liquor	Continuous monitors: O_2	CO	CO_2	NO_x	Heated TUHC	Flue gas: EPA multiple metals train, trace metals	Method 23, PCDD/PCDF	Method 8, particulate and HCl	NIOSH Method S143, UDMH and dimethylamine	Method 0010, semivolatile UDMH PICs	Method 0011, formaldehyde	CARB Method 426, HCN
1. Kiln exit flue gas		X	X		X	X				U1	U2	U1	U2
2. Afterburner exit flue gas		X		X	X					U1	U2	U1	U2
3. Scrubber liquor	X												
4. Scrubber exit flue gas		X		X	X		N, U1	N, U1	N, U2	U1	U2	U1	U2
5. Stack gas		X	X						X				

X: All tests.
N: N_2O_4 tests.
U1: UDMH tests, test set 1 of 2.
U2: UDMH tests, test set 2 of 2.