EPA/600/A-96/016

EVALUATION OF CORROSION ISSUES FOR NANOFILTRATION TREATED WATER

Darren A. Lytle, Michael R. Schock, Thomas F. Speth
U.S. Environmental Protection Agency
NRMRL, WSWRD, TTEB
Cincinnati, Ohio 45268

and

Jeffrey Swertfeger
Richard Miller Treatment Plant
City of Cincinnati Dept. Of Water Works
Cincinnati, Ohio 45228

Introduction

Membrane technologies (ie. reverse osmosis, nanofiltration, ultrafiltration, and microfiltration) have been gaining attention as means of meeting existing and upcoming drinking water regulations. For example, microfiltration has been demonstrated to be effective for meeting the microbial and turbidity standards of the Surface Water Treatment Rule (SWTR).[1,2] The U.S Environmental Protection Agency (USEPA) has listed reverse osmosis (RO) as a best available technology (BAT) for meeting a number of inorganic drinking water standards including cadmium, nitrite, and nitrate[3], antimony and beryllium[4], barium[5], and proposed standards such as sulfate[6], and proposed changes to the radium-226 and -228 standard.[7] Future new disinfection by-product (DBP) regulations and growing microbiological concerns such as Cryptosporidium have further contributed to an increased enthusiasm towards membrane technology and has brought about an increase in research efforts.

Ultrafiltration and microfiltration processes are proven solid-liquid separation technologies suitable for removing particulates from water. However, they are limited in their ability to remove dissolved organic and inorganic parameters. Reverse osmosis is very effective for rejecting high percentages of dissolved and suspended constituents, but may require a great deal of pretreatment and be associated with high operating and energy costs due to pressure requirements. Nanofiltration (NF) shares many of the same treatment advantages as RO, but operates at far lower pressures resulting in a lower cost. For this reason, nanofiltration technology has attracted attention from some water utilities as a potential means of meeting the increasing complexity and number of drinking water standards. Of particular interest is the exploration of nanofiltration as a

treatment strategy for the removal of dissolved DBP precursor material and microbial contaminants.

Because nanofiltration effectively rejects a majority of water constituents, the product water is likely to be corrosive towards distribution system materials. Product water often tends to have a low pH and dissolved inorganic carbon (DIC) concentration, and is stripped of ions such as silica, phosphate, calcium, and aluminum which are frequently incorporated in corrosion-inhibiting surface films that form in distribution systems. The corrosiveness of water treated by nanofiltration depends directly on its application. For example, the use of NF for the removal of dissolved DBP precursor material may dictate that only a portion of the source water be treated to meet a desirable DBP level. Therefore, a proportion of the conventionally-treated water can bypass the membrane and be blended back with membrane-treated water to achieve a reconstituted stable final water. However, if the goal of treatment is to achieve 4 to 5 log removal of microorganisms such as Cryptosporidium, complete water passage through the membrane will be mandatory.

The goals of this paper are to examine the secondary inorganic water quality impacts of nanofiltration water treatment relating to corrosion control issues, and to identify many often-overlooked operational constraints that will cause substantially increased costs in practical applications. The paper uses data gathered from two pilot-scale nanofiltration membrane (1.75"x12" and 4"x40") systems to address the issues. Computer modeling is used to calculate theoretical final water qualities under various blending scenarios and to predict corresponding copper and lead solubilities. Pipe-loop experimentation is used to verify the anticipated impact of nanofiltered water on copper and lead solubility. A general discussion of the implications and roles the water quality parameters impacted by nanofiltration have on the distribution system is made. A brief discussion of potential corrosion control strategies are made as well as pros and cons and costs issues. Post-treatment water quality characteristics of nanofiltered water are compared with full-scale GAC treated water and differences between corrosion control requirements are described.

Experimental

Nanofiltration System

Two pilot-scale nanofiltration systems were evaluated in the study. The first NF system consisted of three 4"x40" (10.2 cm x102 cm) Fluid Systems TFCS membranes[†]. The second system consisted of three 1.75"x12" (2.5 cm x30.5 cm)

[†] Fluid Systems, San Diego, CA.

Fluid Systems TFCS membranes (rolled by Purification Products Company[†]) in series. Because the 1.75"x12" elements were rolled by a different company than the 4"x40" membranes, the spacer material was slightly different. The membrane materials were manufactured on different dates.

In these series systems, the reject water from first membrane was fed to the second membrane, and the reject of the second was fed to the third. The reject of the third membrane was sent to waste. Permeate water from the three 4"x40" membranes were combined in a covered 450 gallon (1700 L) stainless steel storage tank. The combined permeate water was then fed to the "treated" pipe loop board for the corrosion control portion of the study. Combined permeate water from the three 1.75"x12" membranes was not used to evaluate corrosion control and was sent to waste. Instead, the performance of the 1.75"x12" membrane system was compared to the 4"x40" to evaluate scale-up issues.[8] The 4"x40" and 1.75"x12" membranes produced an average of 2.0 gpm (7.56 L/min) and 0.13 gpm (0.48 L/min) of water, respectively. A general schematic of the system configuration is shown in Figure 1. Sample ports, pressure gauges, and rotometers were located between the membranes to measure the feed and concentrate flows. Sample ports and rotometers were also located on each permeate line. Stainless steel piping was used to make water line connections throughout the system.

Pipe Loop System

Two pipe loop boards, a "control" and a "treated" board, were used to evaluate the impact of nanofiltered water on copper and lead:tin solder corrosion. Each board consisted of duplicate Type-L soft copper tubing loops and duplicate Type-L hard copper pipe loops with soldered joints. Each loop was constructed of new 50 ft. (15.2 m) long sections of 0.5-in (1.27 cm) inside diameter pipe or tubing. The soldered copper loops were constructed by a skilled technician using 18-90° elbows and 36 soldered joints with 50:50 Sn:Pb solder. The copper tubing was cleaned prior to use following a previously described procedure which employed dilute acid and degreasing cleaning steps.[9] The cleaning procedure was not used to clean the soldered copper loops for fear of excessive stripping of the lead, which would make that comparison less relevant to actual domestic conditions.

Piping and fittings such as flowmeters and valves leading from the water sources to the pipe loops were constructed of non-metallic materials such as polyvinyl chloride (PVC). Each pipe loop was fed water off a 1.5 in (3.8 cm) PVC manifold line. Each loop consisted of a check valve, needle valve (to control flowrate), rotometer (to measure flowrate), metal pipe section, sample port, and a ball valve in that order. Plumbing fittings and metal pipe were connected by 0.5

[†]Purification Products Company, San Marcos, CA.

in (1.27 cm) schedule 80 PVC pipe. Flowmeters were routinely monitored during flow cycles and adjusted when necessary to maintain a rate of 1 gpm (3.78 L/min). Pressure gauges and pressure relief valves were place at the beginning of each manifold to monitor and maintain a pressure of approximately 30 psi (207 kPa) in each board during stagnation periods. A flow totalizer was also placed at the beginning of each manifold to monitor total flow to each board.

Pipe loop wastes during flow periods went to a common drain on each board. The pipe loop boards had electronic-timer-controlled solenoid valves located at the end of each drain line. Because the treated water board was not sufficiently pressurized under the head of the water in the storage tank alone, a pump was installed between the base of the storage tank and inlet to the manifold. A pressure sensor capable of sending an electronic impulse upon a pressure drop below a preselected pressure was placed strategically in the manifold. When the pressure in the system dropped below the set point (30 psi), such as during solenoid opening or during sampling, a impulse was sent to the pump which initiated activation and flow until pressure returned to the set point. No pump was required in the control line because the pressure in the source water line was normally well above 30 psi and required a pressure relief valve. The solenoids were opened 7 times a day (9:30 AM, 12:00 PM, 2:00 PM, 4:00 PM, 6:00 PM, 8:00 PM, and 10:00 PM) for 15 to 20 minutes each time. This permitted a number of flowing cycles and standing periods to simulate household water usage. Over weekends the nanofiltration system was shutdown due to safety issues with regard to membrane operation. As a result, only one flow period was permitted on Saturdays and Sundays (9:30 AM).

Test Water

The feed water used in the study was Ohio River water treated at City of Cincinnati's Richard Miller Drinking Water Treatment Plant. Raw Ohio River water was coagulated with alum and polymers and passed through plate settlers. Following the plate settlers, water flowed into two sedimentation basins with a combined maximum detention time of three days. After the storage basins, ferric sulfate and a small amount of lime were added prior to sand filtration. The average measurable source water quality characteristics during the time-frame of the study are listed in Table 1 as "feed water before acid addition" and the corresponding sampling point is labeled in Figure 1 as sampling position "FBA". This water was considered the "control" water because it fed the control corrosion test board.

In order to prevent $CaCO_3$ scaling of the NF membranes, 0.75 N H_2SO_4 was added to the control water prior to the membranes. The resulting water quality is shown in Table 1 as "feed water H_2SO_4 addition" and represented in Figure 1 as sampling position "FAA". Because this pretreatment was required for operation of the membrane, it was considered as a contributor to the final water quality

produced by the NF system.

Stored permeate water was fed the "treated" corrosion control test loops. The permeate water quality characteristics are shown in Table 1 as "4"x40" combined permeate" and is represented in Figure 1 as "FS-P123". No post-treatment was performed on the permeate water. Water characteristics of the combined permeate of the 1.75"x12" membrane and the reject waters of both membranes are shown in Table 1.

Sampling

Samples from the nanofiltration systems were taken once a week (typically on Wednesdays). Samples for metals (Al, Ba, Ca, Cu, Fe, Mn, Mg, Pb, Si, S, Zn), wet chemistry (Cl, Fl, PO_4, NH_3, NO_3, and alkalinity), and TIC analysis were taken from the feed line before acid addition, feed after acid addition, and the combined permeate and the final concentrate lines from both units (locations shown in Figure 1). Pipe loop samples (500 mL) were taken once a week (Wednesday) following an 11 hour stand time and measured for metals only.

Analytical

Water samples taken for metal analysis were preserved with ultrapure nitric acid (0.15% v/v).[10] Pipe loop samples and background samples for metals analysis were analyzed for lead, copper, zinc, iron, calcium, potassium, and magnesium according to recommended techniques.[11] Background wet chemistry samples were not preserved and analyzed for alkalinity, phosphate, silicate, ammonia, sulfate, nitrate, and chloride.[12-15]

Results

Water Quality and Fouling

The inorganic water quality parameter removal performance was measured by the percent feed rejection of each parameter of interest. The discussion in this paper is primarily limited to inorganics with emphasis on those that impact corrosion control. A detailed discussion of organic and particulate parameters removal characteristics is made elsewhere.[8] The rejection of an analyte was defined as:

$$\frac{C_F - C_P}{C_F} * 100\% \qquad (1)$$

where C_F (mg/L) was the feed concentration after acid addition and C_P (mg/L) was the combined (3 membranes) permeate concentration. Additionally, the recovery of an analyte was also determined by:

$$\frac{C_P * Q_P + C_R * Q_R}{C_F * Q_F} * 100\% \qquad (2)$$

where, C_R is the reject concentration (mg/L), Q_F is the feed volumetric flowrate (L/min), Q_P is the permeate volumetric flowrate (L/min), and Q_R is the reject volumetric flowrate (L/min). The analyte recovery is simply a mass balance and is useful in determining the tendency of an inorganic parameter to precipitate onto the membrane which may (or may not) result in fouling (ie. a flux loss).

The flow recovery (ratio of permeate flow to feed flow) that a system operates at can dictate the final water quality. Figure 2 shows the feed rejection plotted versus bulk rejection and recovery for a membrane system. The bulk rejection is determined by averaging the feed and concentrate concentrations. This better defines what concentration the membrane experiences. The figure shows how increasing the recovery of a system will result in a final permeate water that is higher in contaminant concentrations. For a single element operating at low percent recovery (10 to 15%), the feed rejection and the bulk rejection are very similar. An example is shown where "Low" is printed. At this point, the recovery is near 15%, and both rejections are near 80%. If many membranes in series are used, or if the membranes are staged, the recovery will increase. Full-scale plants often operate at high recoveries near 85%. If a recovery near 85% is used, the system will have a total feed rejection near 50%. This is shown where "High" is printed on the figure. Therefore, the quality of the final water leaving the plant can change depending on the recovery of the system.

The above example assumes that the bulk percent rejection will remain the same regardless of the concentration that is in contact with the membrane. This is commonly observed when the transport of constituents across the membrane varies directly with the concentration above the membrane. This is observed in diffusion and convection mechanisms associated with nanofiltration elements. Sieving mechanisms do not show this property. As a result of these rejection properties, a permeate water from a membrane that is in a latter stage can actually be higher in concentration than the original membrane feed water. This is because the feed water of the final stages is very high in concentration because of the loss of permeate water in earlier stages. Hence, the total flux of the constituent through the final membrane will be increased due to the increased concentration gradient across the membrane.

Table 2 shows that rejection of all measurable water constituents were generally high. Multivalent ions tended to see higher rejection percentages as anticipated. Monovalent ions such as chloride and sodium tended to be rejected at less than 80% while multivalent ions such as aluminum and sulphate were rejected

at rates greater than 90%. Total inorganic carbon (TIC) which is composed of dissolved carbon dioxide, and the bicarbonate and carbonate ions and carbonate-containing particulate material, was rejected at a rate of approximately 85%. Carbon dioxide readily passes the membrane and as a result lowers the pH of the permeate water. TIC is an important corrosion control parameter and is related to alkalinity and buffering ability of a water. TOC and UV@254 nm were rejected at 92% and 98%, respectively.

Recording an accurate measurement of the permeate water's pH was difficult due its low ionic strength. In addition, the water appeared to be over saturated with carbon dioxide, and as a result the sample was subject to degasification upon exposure to the atmosphere. Despite the measurement complications, the pH drastically decreased following nanofiltration, dropping from 7.8 to approximately 6.1.

The 1"x12" membrane provided consistently higher rejection rates than the 4"x40" membrane. This observation demonstrates the inherent variability in membrane performance and has been observed elsewhere.[8]

Recoveries were good for most analytes, averaging within 10% of 100%. The major exception was iron which only averaged 41% recovery. The low recovery may have been slightly overstated due to analytical uncertainty of the low iron measurements in the permeate water near the instrumental detection limit. However, the error would be relatively small and the outcome still suggests that iron was a likely foulant and was either adsorbing to the membrane surface or precipitating onto the membrane.

Analysis of used membrane cleaning solution supported the theory that iron was a significant membrane foulant. Table 3 shows the inorganic analyses of the cleaning solution taken on 9/5/95. The cleaning solution was high in aluminum, calcium, iron, magnesium, sodium, and silicon dioxide. The mass balance completed over the previous week of operation is also shown. As with daily mass balances shown in Table 2, the mass balances over this week close (add to 100%) reasonably well for most analytes except iron and aluminum. To close the mass balances, the percentage of the feed for the cleaning solution was calculated (Table 3). The cleaning solution data supports the previous assertion that iron and aluminum were depositing on the membrane. The data also indicate that cleaning the membrane releases more iron than had deposited on the membrane during the previous week. This is true to a lesser extent for aluminum. Therefore, this cleaning was removing iron and aluminum that had deposited early in the membrane run before routine consistent cleaning.

Analysis of pressure drop and flux decline data shows that the first membrane element had the greatest amount of fouling.[8] This suggests that the

foulant was particulate in nature. Dissolved foulants would cause the greatest flux decline in the third element in series due to the higher concentrations present in the element. Therefore, this information combined with the mass balance data, suggests that the foulant was iron containing-particulate material.

In this study, membrane fouling was a considerable operational and cost issue. The membranes had to be cleaned weekly due a significant drop in flux from the apparent build-up of iron, aluminum, and microbiological growths. Iron fouling can jeopardize nanofiltration efficiency unless pretreatement for iron removal is employed. Removal of iron using oxidants such as chlorine and potassium permanganate is not acceptable since the membranes are not tolerant of oxidants. Removal of iron by aeration and filtration is an alternative, however, air binding of membranes can also be problematic.

Impact on Corrosion

Surficial Coatings

Surficial coatings refer to films which cover a pipe and prevent the contact of water with the underlying pipe material. There are natural diffusion barrier films which include materials such as aluminum hydroxides and silicates, manganese dioxide, and organic-containing films; calcium carbonate deposits, and silicate-based coatings. Historically, calcium carbonate deposition has been a commonly used corrosion control approach. The treatment involves chemically adjusting the pH, DIC, and/or calcium concentration of a water to favor the deposition of calcium carbonate. Recently the reliability of this practice has been questioned due to lack of evidence showing a uniform protective coating throughout an entire distribution system. However, calcium-containing solids may be significant in protective films, even if not exactly calcium carbonate.

Aluminum-containing films (often associated with silica) built up in domestic plumbing over many years of normal plant operation have been reported by many. These films have been suggested as having been beneficial to lead and copper leaching from plumbing.[16-19] One study documented an increase in lead mobilization apparently resulting from sloughing-off of Al-based pipe scales.[19] More recent evidence for a corrosion-reducing aluminum or aluminosilicate film has been described in a study conducted by the Denver Water Department, where significant precipitated coatings were inhibiting lead and copper release from corrosion control pipe loop study test rigs.[18] Aluminosilicate minerals clearly are important naturally-forming solids, and are geochemically plausible for many drinking waters with a near-neutral to slightly acidic pH.

Passivating Films

Passivating films refer to coatings that result from pipe material itself reacting with major water quality parameters. Examples include metal- carbonate, hydroxide,

phosphate, and sulfate based solids. Such films can either form naturally or by imposed by corrosion control treatment by adjusting water quality conditions (ie. pH, DIC, and orthophosphate) to favor the formation of the most stable solid form of the pipe material.

The DIC concentration and pH of a water have the most significant impacts on the formation of passivating films and metal solubility. DIC can have either a positive or negative impact on corrosion control.[16,20,21] DIC serves to control the buffer intensity in most water systems, and therefore, sufficient DIC is necessary to provide a stable pH throughout the distribution system for corrosion control of copper and lead.[16,22,23] A DIC guideline of 2 mg C/L has been suggested[20] as a minimum DIC to provide adequate pH buffering and to form protective lead carbonate basic lead carbonate. Discussion among corrosion researchers has recently resulted is suggestions favoring pushing that minimum limit upwards to as much as 5 mg C/L primarily to assure adequate buffering ability. However, it is well established that increasing amounts of DIC can result in increased lead and copper solubility.[16,22-26]

The impact of other water quality parameters on lead and copper solubility, however, are not as well understood. For example, Schock et al.[23,27] showed that copper levels were consistently above the solubility of copper predicted by cupric hydroxide or oxide models when elevated levels of sulfate (>30 mg SO_4^{2-}/L) were present at pH 8.0 in experimental test systems. The authors found that the sulfate-containing mineral $Cu_4(OH)_6SO_4 \cdot H_2O$ (posnjakite) was present on the copper pipes. Edwards, et al.[24,25] also showed that sulfate increased copper corrosion rates in water. Rehring and Edwards[28] attributed higher copper corrosion rates in enhanced coagulated waters to additional sulfate carryover from the alum coagulant and also showed lower copper corrosion rates from chloride carryover from ferric chloride enhanced coagulation. The impact of anions such as nitrate, sulfate, and chloride on lead solubility have been considered by several researchers.[29]

Considerations and Implications

Investigation of the interior surface of home plumbing will likely show a complex mix of both surficial coatings and passivating films. The solid materials exist in chemical equilibrium with the ions in the water either as a result of natural evolution or through encouragement by the addition of chemicals. Disturbance of that equilibrium will certainly disrupt that balance and lead to the gradual destabilization of those films.

When considering applying new treatment processes such as nanofiltration, a water utility must consider secondary impacts that may arise such as pre- and post-treatment needs and costs, chemical costs and handling issues, and regulatory conflicts. An evaluation of the impact of the treatment on the water chemistry should be made either through a pilot- or bench-scale testing program and through

examination of the existing deposits responsible for corrosion control in the present distribution system. An assessment of how those changes might effect other issues such as corrosion control must also be made.

The data presented in this paper demonstrated that nanofiltration clearly rejected TOC and presumably DBP precursor material at a high rate (Table 2) which was the intended objective of the evaluation. However, a high rejection rate of DIC, aluminum, and calcium as well as a major drop in pH were also observed. Based upon the proceeding introduction, such changes can have a negative impact on the films that may exist on the pipe and metal solubility. The following sections present a detailed evaluation of the corrosion impacts of nanofiltered water.

Pipe Loop Results

Although the pipe loop portion of the study began in November, 1995, a month-long partial government shutdown and holiday season limited the number of data points collected and represented at the time of the preparation of this document. Figure 3 shows the copper levels during the first month of the study. Preliminary results showed that copper levels in the loops subjected to nanofiltered water are considerably higher than in the control loops. Lead levels were also higher in the solder loops subjected to the nanofiltered water. Lead levels, however, were not reproducible, which is a common pattern for lead levels collected from new soldered pipe during the early stages of a study. Because the films that form on the surface of pipe can take months to develop in a pipe loop, accurate assessment of the results cannot be made until they are established.

Other Issues

Although not a direct regulatory compliance issue, degradation of performance of unlined iron, cement mortar-lined or asbestos-cement pipes can constitute a tremendous cost to utilities, in terms of replacement for structural failure, loss in flow efficiency, and additional maintenance programs (such as routine cleaning, relining, and flushing). Further, deterioration in the aesthetic quality of water provokes serious consumer responses and lack of confidence in the water supplier. Consumers that then choose to replace municipal water by bottled water incur both the cost of the conventional water bills, and the cost of the commercial product. This is often a neglected impact in cost/benefit evaluations. Aside from the impetus of the lead and copper regulations, for tens of years many utilities have practiced corrosion control through water chemistry adjustment and sometimes corrosion inhibitor addition, for these non-regulatory reasons.

By almost any corrosivity standards, the low ionic strength, the low pH and somewhat low levels of many potentially protective ionic species constitute serious aggressive properties towards most standard distribution system and domestic plumbing materials. Various forms of attack and special problems with imbalanced ionic ratios (such as sulfate and chloride to bicarbonate) have been discussed for

low ionic strength waters.[30] Severe attack and undermining of cementitious materials is also an inevitable consequence of major demineralization.[31] Essentially, water supplies largely processed by softening nanofiltration membranes are changed from frequently stable or otherwise non-corrosive states to waters requiring extensive corrosion control treatment for all realistic metallic or cementitious materials. This treatment is necessary to not only restore the finished water to a state of passivation or inhibition, but also to overcome the serious water quality degradation from destabilization of existing pipe scales that usually accompanies any major changes in water quality. Many utilities that have changed water sources, or that have introduced blending of different (even relatively non-corrosive) water sources, have had serious problems in this regard.

Blending

Overview

The previous discussions have been based on non-blended nanofiltered water which in the case of corrosion control would be considered a "worst case" condition. If the goal of implementing nanofiltration is to provide adequate removal of microbial contaminants such as Cryptosporidium, blending feed and permeate water will not likely be an option. The worst case scenario will be the case and appropriate evaluation and action to reconstitute the water and provide desirable corrosion control. If the goal of nanofiltration is to achieve a desired level of DBP precursor material, blending feed and permeate waters will be a function of the influent levels and rejection rate. Blending will provide some reconstitution of the water and corrosion protection.

Estimating Corrosivity Effects

Limitations on the ability of short-term experiments to predict ultimate implications for regulatory compliance, aesthetic degradation, and infrastructure integrity resulting from changes in water treatment processes is well-recognized. Therefore, because the response of lead and copper solubility to different water qualities is now becoming more predictable, some modeling of the water quality impacts from blending nanofiltered and bypassed water was undertaken. The modeling was done in three stages. First, a check of the general quality of the data and possible inorganic scaling substances. Second, the composition and pH of various ratios of unadjusted feed water to permeate were estimated. Finally, for each mixing ratio, the ionic strength, DIC, pH and sulfate concentration were input into specialty computer programs for computing estimated equilibrium solubility assuming control by any of several solid phases.

Lead was assumed to be controlled by well-aged $PbCO_3$ (normal lead carbonate, mineral cerussite) or $Pb_3(CO_3)_2(OH)_2$ (basic lead carbonate, mineral hydrocerussite) depending upon the pH and DIC concentration.[16,17] This is a compromise estimate, between the likely worst-case scenario represented by new

lead pipe in pipe loop or coupon situations where a metastable $Pb_3(CO_3)_2(OH)_2$ of slightly increased solubility forms[32], and the erratic and sometimes low concentrations produced by brass fixtures and soldered joints of varying ages, lead composition[33], and exposed surface lead.

The tendency of copper to form metastable phases that persist for many months to many years has recently been investigated for drinking water conditions.[23-25,27] In recognition of this phenomenon, three alternative scenarios for copper were chosen: "aged" pipe condition, represented by established coatings of $Cu_2(OH)_2CO_3$ (malachite), CuO (tenorite), or both; "young" pipe case, represented by equilibrium with $Cu(OH)_2$ (cupric hydroxide); and metastable equilibrium with the basic copper sulfate phase approximately corresponding to $Cu_4SO_4(OH)_6 \cdot H_2O$ (langite, or similar). Evidence for the latter case had been found in an earlier study with finished Cincinnati tap water with a pH greater than 8, where a similar hydrated hydroxy-sulfate mineral (posnjakite) was observed, but credible solubility data has not been found for that specific solid.[23,27]

To do the mixing calculations, the equilibrium chemical speciation program PHREEQE (PH/REdox EQuilbrium Equations) was used.[34] Some major water constituents are relatively non-reactive and conservative upon mixing. However, pH and alkalinity are not simple linear mass functions directly proportional to dilution.[35-37] Furthermore, additional examination was desired for changes in possible precipitate phases that might be responsible for membrane fouling or changes in the saturation state of possible diffusion barrier forming substances. These concerns necessitated the use of a comprehensive water chemistry model.

The two end-member cases for water blending modeling were the feed water (before acid addition) and the combined permeate water. The assumption made was that a utility might lower costs or reduce radical distribution system water quality changes through bypassing the membrane system to some extent. The average water chemistries over the study period covered in this report (Table 1) were first checked for gross analytical errors via ion balance and speciation calculations using the WATEQX equilibrium chemistry computer program[38] with slight modifications.[23] The equilibrium constants for major dissolved mineral species were standardized between the two computer programs to yield consistent computations and predictions. Though no important discrepancies or errors were found, there was an internal inconsistency among DIC, pH and total alkalinity far beyond analytical error. This apparently was caused by the non-equilibrium nature of the operation of the system, resulting in analytical or sampling biases. No good estimate of system redox potential (pE or Eh) is available, which would be necessary to accurately compute iron speciation. However, conservatively assuming a pE of 10 because the feed water was initially near dissolved oxygen saturation, saturation index computations[23,34,38] Calculations showed considerable oversaturation for various aluminum hydroxide, ferric iron oxyhydroxide, and

aluminosilicate solids.

Because of the aforementioned inconsistency among pH, DIC and alkalinity, mixing computations were performed using the PHREEQE program on an individual representative case, using analyzed DIC and observed pH for the feed and permeate waters. Both end-member waters were precisely charge balanced by "adding" different small quantities of a relatively non-reactive constituent (sodium) to the analyzed values, in order to facilitate the most accurate computation of the predicted pH for each mixing case by a widely-accepted approach.[40,41] Computations were done assuming mixtures every 10%, from 100% feed water (0% permeate) to 100% permeate (0% feed). The accuracy of this approach is largely dependent upon the accuracy of the analyzed pH values. Because of a lack of viable thermodynamic data for complex formation and solubility constants at different temperatures, all modeling was done assuming a temperature of 25°C. This will not affect the trends of the projections, however.

To compute the predicted equilibrium solubility for each mixing ratio, the resulting pH, ionic strength, sulfate, DIC, and chloride concentrations were input into the specialized FORTRAN-language LEADSOL and CU2SOL computer programs, which were described and used for numerous previous studies.[17,23,27,32]

Figure 4 shows the predicted response of pH, calcium, sulfate and DIC for various ratios of blending feed water and permeate. The results are very predictable, showing the linear decrease in the properties where total mass is conserved (the system is assumed to be closed so that there is no exchange of CO_2 gas), and the nonlinear decrease in pH. Only approximately 50% blending in this system reduces the pH from approximately 7.8 to 7. Drastic reductions in other metal concentrations, such as calcium and aluminum, would be likely to destabilize existing distribution system films of which they were a significant component. The role of DIC in corrosion control, metal solubilization, and passivation is complicated, and interrelated with pH. Therefore, reducing DIC is not necessarily bad in all cases. What is of concern, however, is that as blending is shifted to high percentages of permeate water, buffer intensity of the water is considerably reduced. This effect would be even more pronounced after any subsequent pH adjustment for corrosion control, particularly if the target pH needed were around 8 to 8.5.[22,42] Because DIC realistically provides almost all of the buffering ability in drinking water, even in the presence of phosphate-based inhibitors, excessive removal will lead to pH instability throughout the distribution system and poor corrosion control performance.

Figure 5 shows the predicted effect on copper(II) and lead(II) solubility given different assumptions about the ages of the pipe and passivating films forming on them under different water qualities. Effects on lead leaching from relatively new brass and exposed solder would follow similar trends. For this

particular water chemistry, degradation of performance for lead-containing materials would begin for even small amounts of added permeate to the finished water, without subsequent water chemistry adjustment.

The effects on copper(II) solubility are even more dramatic, with copper solubility likely increasing more than 10-fold with 80% permeate included in the blend. Only for old copper pipe with very well-developed malachite and tenorite films would the blending be relatively non-aggressive in terms of overall solubility. However, even at the low copper levels in equilibrium with well-passivated pipe, the relative solubility increase, and hence the potential for undermining and destabilization of the existing surface films would be great.

Comparison Between Nanofiltration and GAC

The feed water to the nanofiltration unit was also the feed water to the Miller Plant's GAC filtration system (treats an average of 100 MGD) which allowed for a comparison between treatment processes and corrosion control issues. Table 4 is a comparison between major water quality parameters and removal efficiencies for the pilot nanofiltration system and the GAC system. Aside from major organic parameters, particulates, and turbidity, GAC treatment creates no major water quality changes. Nanofiltration achieves better removal of organic parameters, and also creates major water quality changes as already discussed. In addition, water recovery of the nanofiltration membrane system averaged only 36%. This affects final water quality, as discussed earlier, and concentrate disposal issues.

Figure 6 is a slightly expanded-scale version of Figure 5, with the addition of the line for predicted TOC removal for easy comparison. Also marked is the point in TOC concentration that is equivalent to the removal observed in practice by the GAC system described previously. Note that this occurs in this system at a final mix of approximately 80% permeate water. Because copper and lead solubility would be elevated 2 to 6 fold at this point, substantial membrane post-treatment would be required before the water could be distributed.

The primary operational change upon GAC installation, for the Miller Plant whose influent was a moderately hard, low- to moderate- alkalinity surface water, was a change in pH control chemical and adjustment point. Final adjustment for corrosion control consists of lime addition prior to sand filtration. This provided an increase in pH to 8.5 or above, and occasionally some inadvertant softening. Final total alkalinity was usually in the 45 to 55 mg $CaCO_3$/L range, providing adequate buffer intensity for unlined iron mains and other distribution system materials, and a stable water for cementitious materials. Sodium hydroxide is added to the GAC filtered water to supplement pH adjustment while still adding lime prior to sand filtration. Without sodium hydroxide addition, the final pH goal

of 8.5 cannot be consistently met. The addition of sodium hydroxide, after filtration and GAC adsorption, is necessary because during certain times of the year, lime addition caused calcium carbonate deposition in the sand and GAC filters. Therefore lime feed is lowered to avoid this complication and sodium hydroxide was added after GAC to supplement pH adjustment.

Generally, modifications of existing treatment processes that are otherwise acceptable from a corrosion control standpoint to accommodate only GAC would tend to involve changes in application points of corrosion control chemicals. The impact of the GAC process on the major ionic background of the water has been shown to be relatively minor. Thus, the kinds of process changes to be made would be unlikely to produce a water chemistry change that would result in major opportunities to increase corrosivity or destabilize existing films.

On the other hand, the fundamental nature of nanofiltration or other membrane processes is to largely demineralize the water. To reconstitute even a blend of the treated source water with membrane filter product to a similar water quality state as has been established for the distribution system materials over many years of use, would be a complicated and costly task. In addition to pH adjustment, DIC, calcium and possibly other constituents may have to be re-introduced in the form of additional feed of bulk chemicals. Subsequent mixing, settling or filtration may be needed, as well as any other corrosion inhibitor chemicals. These factors introduce both capital construction costs, as well as continuting maintenance and operation cost increases.

Discussion

The results of this study demonstrated that nanofiltration was effective at rejecting large percentages of organic material as well as a number of inorganic parameters. Nanofiltered water, however, was determined to be corrosive to lead and copper due to its low ionic strength, low pH, low DIC, and large removal of other parameters that may be critical in surface coatings. In addition, the corrosive water may contribute to the degradation of other distribution system materials and potentially lead to pipe failures and aesthetic consumer complaints.

When the objective of nanofiltration is to achieve a high degree of microbiological removal, blending of feed and permeate waters will not be possible. The resulting water will also represent a worst case scenario requiring significant post-treatment to achieve corrosion control goals. If the goal of treatment is to achieve TOC removal, for example, the degree of blending may be dictated by the amouunt of TOC to be removed. Post-treatment corrosion control will remain an issue and will have to be evaluated on a case by case basis.

In addition to post-treatment costs, a number of other issues and costs must

be considered prior to implementing nanofiltration. Fouling of the membranes was a problem in this study. Presumably small amounts of iron and microbiological foulants were believed to create fouling concerns. This introduces the issue of pre-treatment to reduce membrane fouling (organic, inorganic, microbiological), which may consist of iron/manganese oxidation or removal, scaling inhibition (anti-scalents or acid addition), and disinfection. Because membranes are sensitive to many oxidants, residual oxidant removal from influent water may also be required. If pH adjustment is required to prevent calcium carbonate scale build-up, the buffer intensity of water and original pH will dictate the volume of acid continuously used. It will also dictate the volume of base chemical used to recover alkalinity.

Chemical safety, storage, and feed equipment issues must also be considered. And examination of the nanofiltration reject water disposal issues and increased pumpage demands must be made.

Conclusion

This study demonstrated that nanofiltered-softened water absent of blending, such as the need for microorganism removal, is a demineralized water of low pH and is corrosive towards distribution system and domestic plumbing products. Costs associated with post-treatment of the water to meet lead and copper requirements, as well as chemical addition, handling, and safety issues must be addressed before considering nanofiltration. The blending and solubility calculations presented may provide slightly different results depending primarily upon the pH and DIC for the normal source and finished waters involved. However, they still demonstrate that corrosion issues remain a concern when blending is employed. Pre-treatment costs to prevent membrane fouling can also be a significant cost.

Nanofiltration was more effective at removing organic material than GAC. However, it produced a far more aggressive finished water. Nanofiltration also had concentrate disposal issues that GAC lacks. Ironically, nanofiltration may be more viable for source waters with low hardness, pH and DIC, so that the changes in parameters most influential to corrosion will be minimized, and scaling constraints will be reduced.

Acknowledgements

The authors would like to thank Renea Lohmann and Jack DeMarco of the Cincinnati Water Works for sharing operational data and providing review of the experimental results and the paper. The authors also appreciate insightful suggestions and comments provided by Michelle Frey, Black and Veatch, Inc. (Aurora, CO). Analytical data, sampling, and technical assistance was provided by Keith Kelty, James Doerger, James Caldwell, Don Mitchell, Maura Lilly,

Christopher Keil, and Herb Braxton of the Water Supply and Water Resources Division of the USEPA National Risk Management Research Laboratory, and Gregory George, Stephen Harmon, Mark Domino and John Dammann of Dyncorp/Technology Applications Incorporated. Leo Fichter of NRMRL, USEPA also provided important construction and testing support, and Thomas Sorg and Jeffrey Adams also of NRMRL, USEPA, provided manuscript reviews.

Disclaimers

Mention of commercial names does not constitute endorsement or recommendation by the agency. The views expressed in this paper are those of the authors, and do not necessarily reflect USEPA policy.

References

1. Filtration and Disinfection: Turbidity, *Giardia lamblia*, Viruses, *Legionella*, and Heterotrophic Bacteria. Final Rule. *Fed. Reg.* 54:124:27486 (June 29, 1989).

2. Coffey, B. M., Stewart, M. H. & Wattier, K. L. Evaluation of Microfiltration for Metropolitan's Small Domestic Water Systems. *Proc. AWWA Membrane Technology Conference*, Baltimore, Md., Aug. 1-4, (1993).

3. SOCs and IOCs. Final Rule. *Fed. Reg.* 56:20:3526 (Jan. 30, 1992).

4. SOCs and IOCs. Final Rule. *Fed. Reg.* 57:138:31776 (July 17, 1992).

5. Aldicarb, Aldicarb Sulfoxide, and Aldicarb Sulfone, Pentachlorophenol, and Barium. Final Rule. *Fed. Reg.* 56:126:30266 (July 1, 1992).

6. Sulfate. Proposed Rule. *Fed. Reg.* 59:243:65578 (Dec. 20, 1994).

7. Radionuclides. Proposed Rule. *Fed. Reg.* 56:138:33050 (July 18, 1991).

8. Speth, T. F., *et al.* Evaluating Bench-Scale Nanofiltration Studies for Predicting Full-Scale Performance. *To be published in the Proc. AWWA GAC and Membrane Workshop*, Cincinnati, OH, March 4-6, (1996).

9. Lytle, D. A., Schock, M. R. & Tackett, S. Metal Corrosion Coupon Study Contamination, Design, and Interpretation Problems. *Proc. AWWA Water Quality Technology Conference*, Toronto, ON, Nov. 15-19, (1992).

10. U.S. Environmental Protection Agency. "Handbook for Analytical Quality Control in Water and Wastewater Laboratories", Environmental Monitoring and Support Laboratory, Cincinnati, OH., EPA-600/4-79-019 1979).

11. U.S. Environmental Protection Agency. "Test Methods for Evaluating Solid Wastes", Risk Reduction Engineering Laboratory, SW846 (Sept., 1986).

12. APHA, AWWA & WPCF. *Standard Methods for the Examination of Water and Wastewater*. 18th Ed. (1992).

13. Modified from Methods for the Determination of Inorganic Substances in Water and Fluvial Sediments, U.S. Geological Survey Open-File Report, (85-495). (1985).

14. Alpkem Research Inc. Clackamas, OR. (1995).

15. U.S. Environmental Protection Agency. "Methods for Chemical Analysis of Water and Wastes", EPA-60014-79-020 1983).

16. Schock, M. R. "Understanding Corrosion Control Strategies for Lead". *AWWA*, 81:7:88 (1989).

17. Schock, M. R. & Wagner, I. "The Corrosion and Solubility of Lead in Drinking Water". Ch. 4 In: *Internal Corrosion of Water Distribution Systems*. AWWA Research Foundation/DVGW Forschungsstelle, Denver, CO, (1985).

18. Lauer, W. C. & Lohman, S. R. Non-Calcium Carbonate Protective Film Lowers Lead Values. *Proc. AWWA Water Quality Technology Conference*, San Francisco, CA, November 6-10, (1994).

19. Fuge, R. & Perkins, W. "Aluminum and Heavy Metals in Potable Waters of the North Ceredigion Area, Mid-Wales". *Environ. Geochem. & Health*, 13:2:56 (1991).

20. AWWARF. *Lead Control Strategies*. AWWA Research Foundation and AWWA, Denver, CO, (1990).

21. Gregory, R. & Jackson, P. J. Central Water Treatment to Reduce Lead Solubility. *Proc. AWWA Annual Conference*, Dallas, TX, June 10-14, (1984).

22. Schock, M. R. "Internal Corrosion and Deposition Control". Ch. 17 In: *Water Quality and Treatment: A Handbook of Community Water Supplies*. McGraw-Hill, Inc., New York, (1990).

23. Schock, M. R., Lytle, D. A. & Clement, J. A. "Effect of pH, DIC, Orthophosphate and Sulfate on Drinking Water Cuprosolvency", U. S. EPA Office of Research and Development, Cincinnati, OH, EPA/600/R-95/085 1995).

24. Edwards, M., Meyer, T. E. & Schock, M. R. "Alkalinity, pH and Copper Corrosion By-Product Release". submitted manuscript(1995).

25. Edwards, M., Meyer, T. & Rehring, J. P. Effect of Various Anions on Copper Corrosion Rates. *Proc. AWWA Annual Conference*, San Antonio, TX, June 6-10, (1993).

26. Schock, M. R. & Lytle, D. A. The Importance of Stringent Control of DIC and pH in Laboratory Corrosion Studies: Theory and Practice. *Proc. AWWA Water Quality Technology Conference*, San Francisco, CA, November 6-10, (1994).

27. Schock, M. R., Lytle, D. A. & Clement, J. A. Modeling Issues of Copper Solubility in Drinking Water. *Proc. ASCE National Conference on Environmental Engineering*, Boulder, CO, July 11-13, (1994).

28. Rehring, J. P. & Edwards, M. The Effects of NOM and Coagulation on Copper Corrosion. *Proc. ASCE National Conference on Environmental Engineering*, Boulder, CO, July 11-13, (1994).

29. Beccaria, A. M., *et al.* "Corrosion of Lead in Sea Water". *Br. Corros. J.*, 17:2:87 (1982).

30. Ferguson, J. F. "Corrosion Arising from Low Alkalinity, Low Hardness, or High Neutral Salt Content Waters". Ch. C. 8 In: *Internal Corrosion of Water Distribution Systems*. American Water Works Association Research Foundation/DVGW Forschungsstelle, Denver, CO, (1985).

31. Holtschulte, H. & Schock, M. R. "Asbestos-Cement and Cement-Mortar-Lined Pipes". Ch. 6 In: *Internal Corrosion of Water Distribution Systems*. AWWA Research Foundation/DVGW Forschungsstelle, Denver, CO, (1985).

32. Schock, M. R. & Gardels, M. C. "Plumbosolvency Reduction by High pH and Low Carbonate--Solubility Relationships". *Jour. AWWA*, 75:2:87 (1983).

33. Lytle, D. A. & Schock, M. R. Impact of pH and Lead Composition on Metal Leached from Brass Coupons. *Proc. AWWA Annual Conference*, San Antonio, TX, June 6-10, (1993).

34. Parkhurst, D. L., Thorstenson, D. C. & Plummer, L. N. *PHREEQE - A Computer Program for Geochemical Calculations*. Water-Resources Investigations 80-96, U. S. Geological Survey (1980).

35. Trussell, R. R. & Thomas, J. F. "A Discussion of the Chemical Character of Water Mixtures". *Jour. AWWA*, 63:1:49 (1971).

36. Wigley, T. M. L. & Plummer, L. N. "Mixing of Carbonate Waters". *Geochim. Cosmochim. Acta*, 40:989 (1976).

37. Jordan, C. "The Mean pH of Mixed Fresh Waters". *Water Res.*, 23:10:1331 (1989).

38. van Gaans, P. F. M. "WATEQX - A Restructured, Generalized, and Extended FORTRAN 77 Computer Code and Database Format for the WATEQ Aqueous Chemical Model for Trace Element Speciation and Mineral Saturation, for Use on Personal Computers or Mainframes". *Comp. & Geosci.*, 15:6:843 (1989).

39. Nordstrom, D. K. & Munoz, J. L. *Geochemical Thermodynamics*. Blackwell Scientific Publications, Palo Alto, CA, (1986).

40. Plummer, L. N. *Mixing of Sea Water with Calcium Carbonate Ground Water*. Memoir 142, Geological Society of America (1975).

41. Wigley, T. M. L. & Plummer, L. N. "Mixing of Carbonate Waters". *Geochim. Cosmochim. Acta*, 40:989 (1976).

42. Snoeyink, V. L. & Jenkins, D. *Water Chemistry*. John Wiley and Sons, New York, (1980).

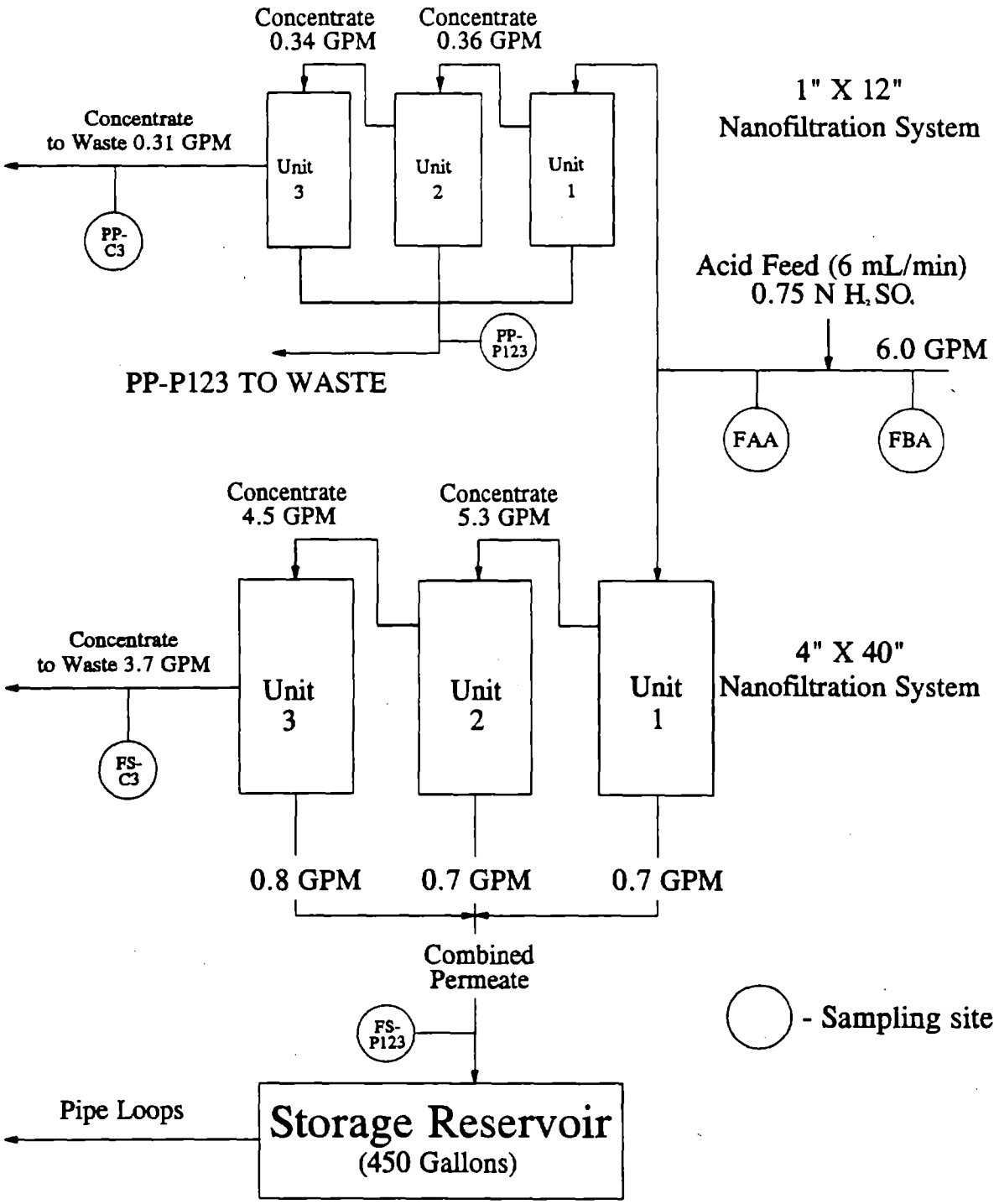

Figure 1. Schematic of nanofiltration pilot systems.

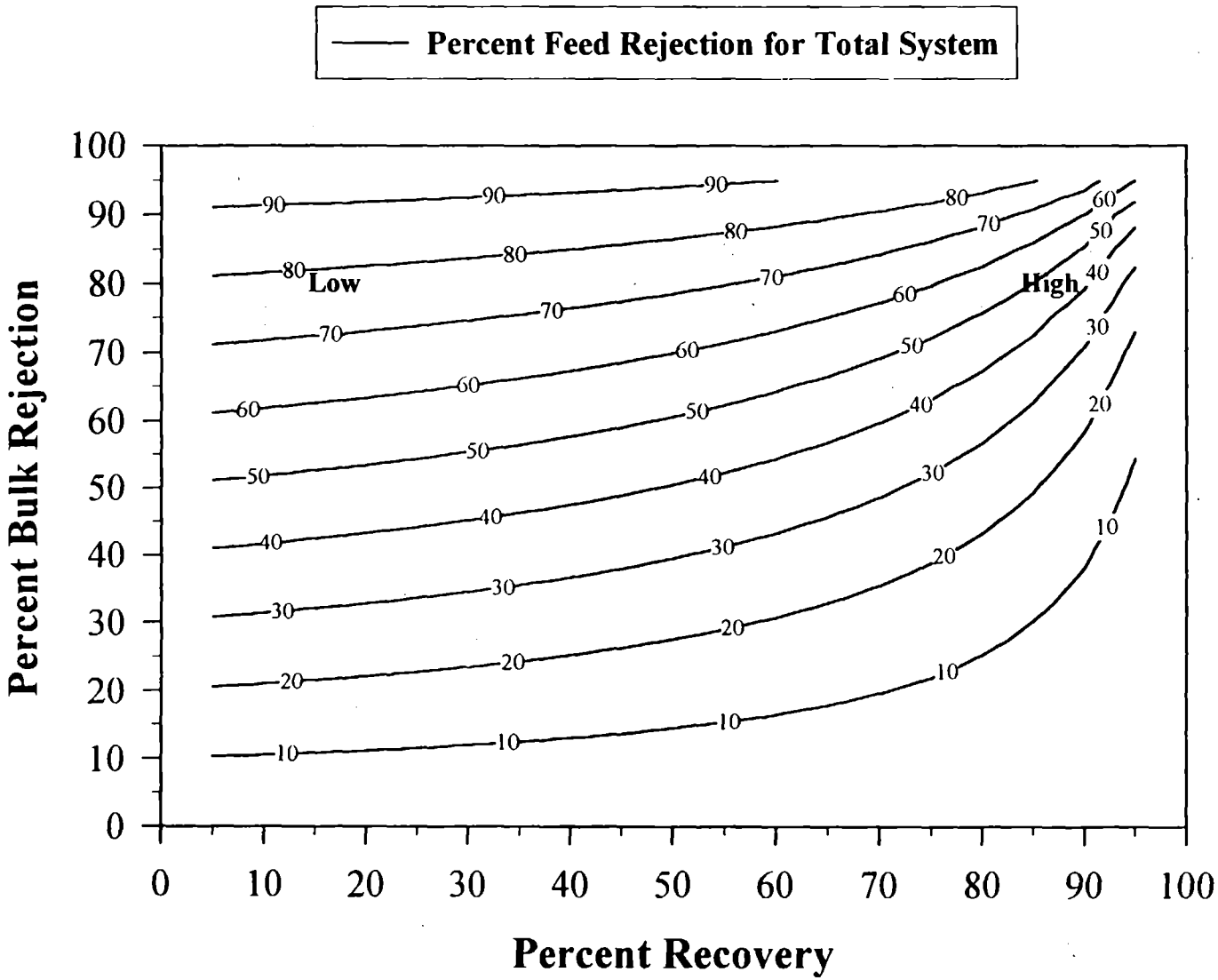

Figure 2. Feed rejection versus bulk rejection and recovery for a membrane system.

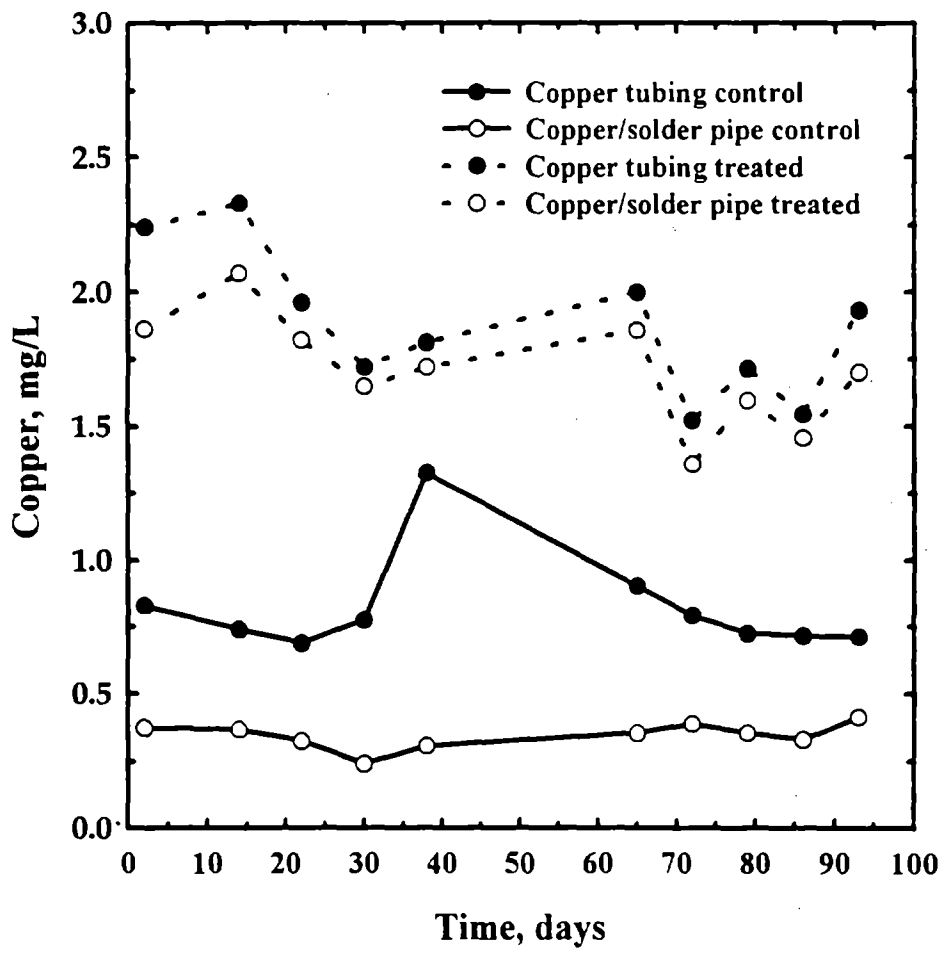

Figure 3. Copper levels from pipe loop samples taken following 11 hours stagnation time. Control and nanofiltered loops are shown.

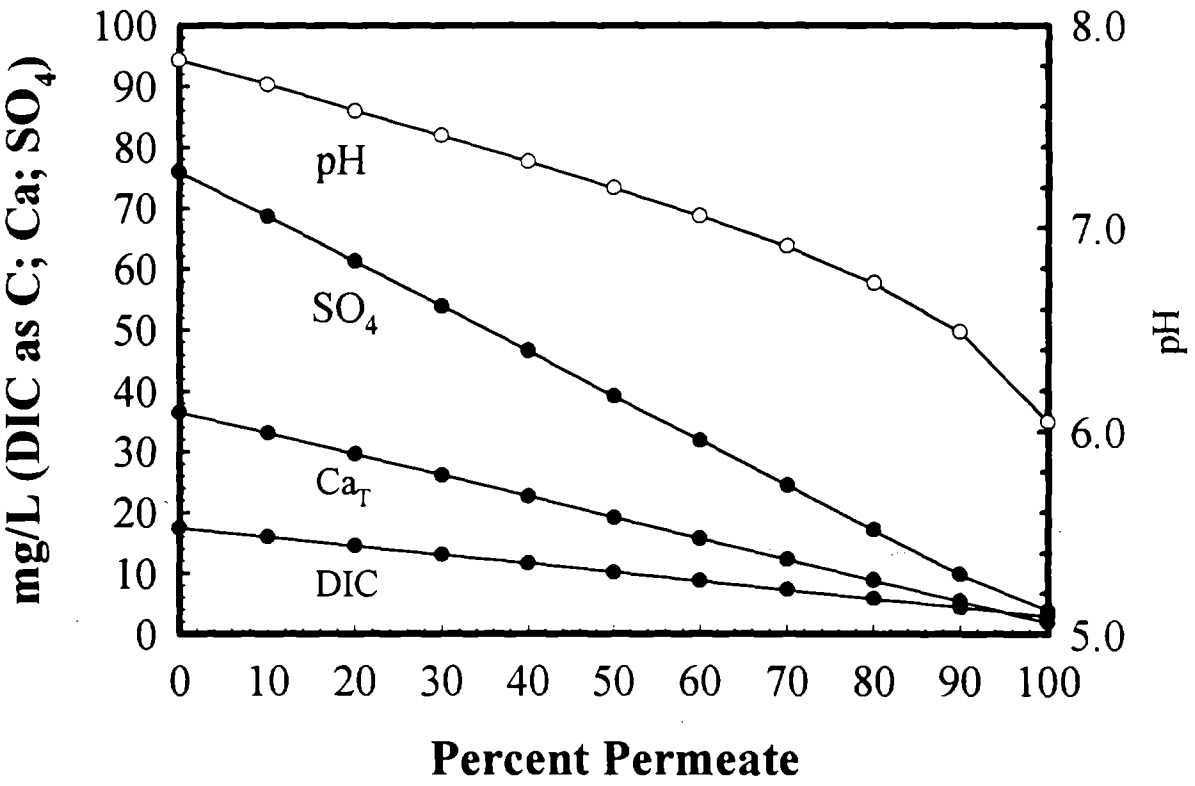

Figure 4. Theoretical effect of blending on some major water quality parameters.

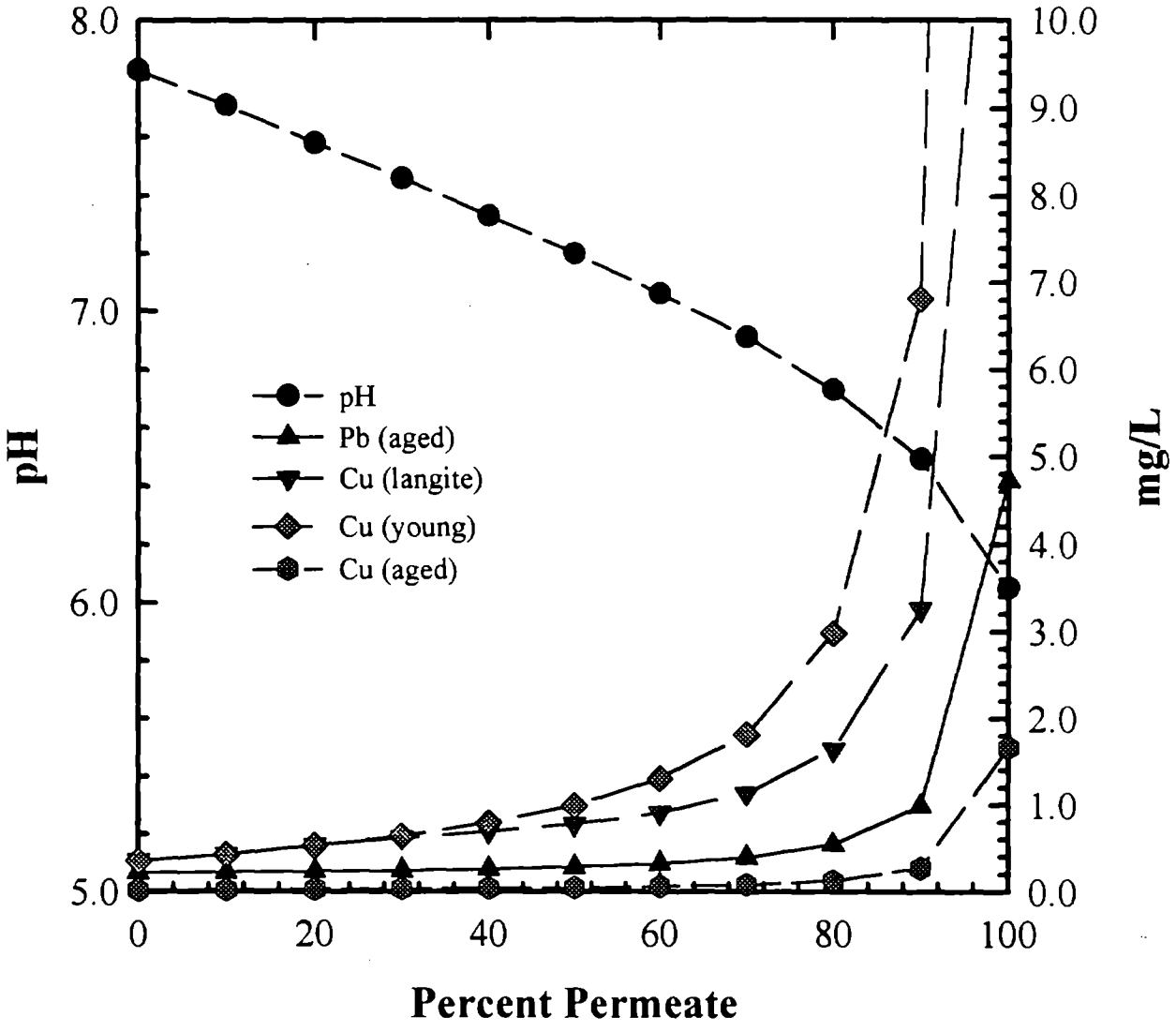

Figure 5. Theoretical effect of blending on lead and copper solubilities.

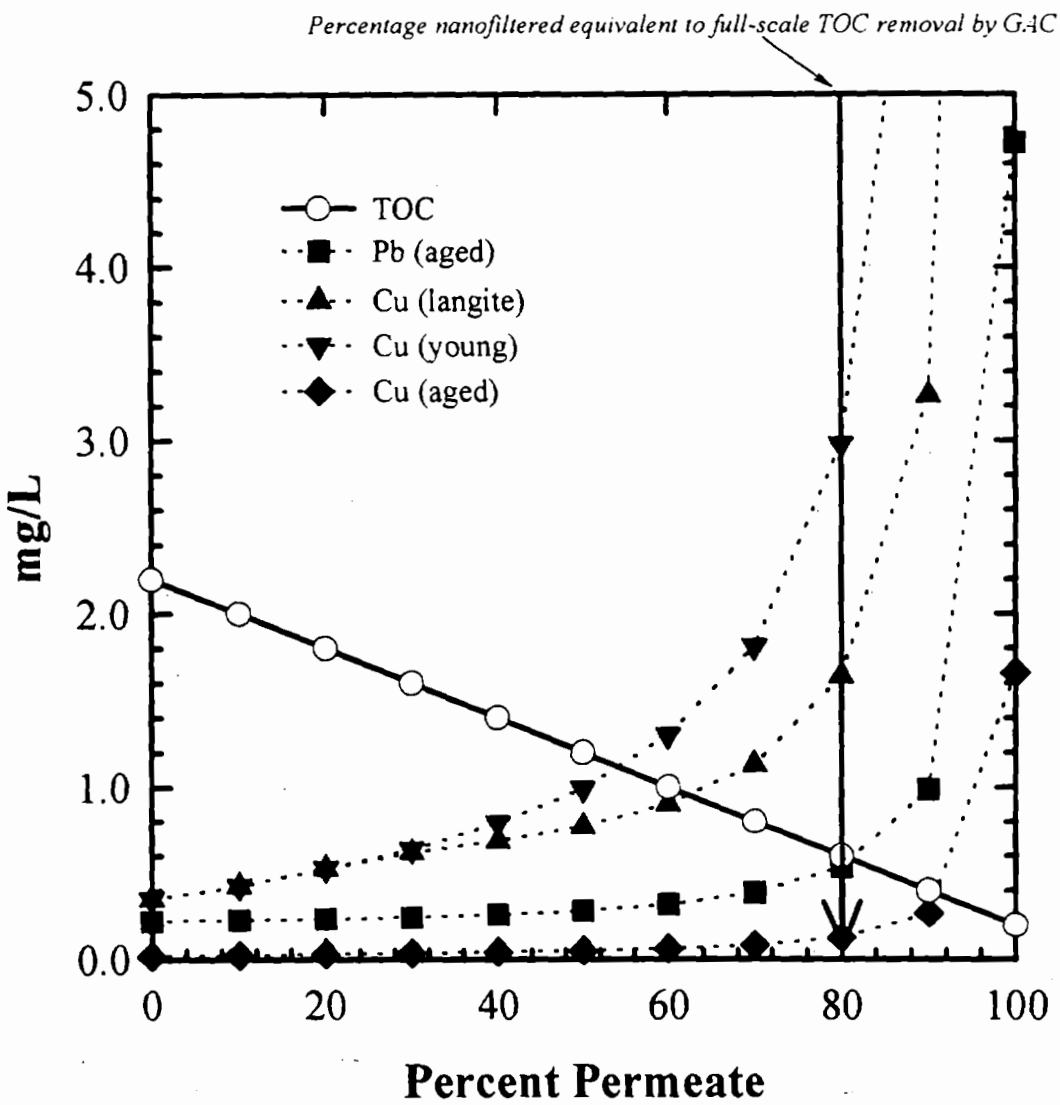

Figure 6. Relationship between theoretical TOC removal and lead and copper solubility under different mixing scenarios.

Table 1. Water quality charatcteristics at stages of nanofiltration treatment system.

Analyte	Feed: Feed Water Before Acid Addition	Feed: Feed Water H_2SO_4 Acid Addition	4"X40": Final Concentrate	4"X40": Combined Permeate	1"X12": Final Concentrate	1"X12": Combined Permeate
Location	FBA	FAA	FS–C3	FS–P123	PP–C3	PP–P123
Cations						
Aluminum, mg/L	0.1	0.1	0.2	0.0	0.2	0.0
Calcium, mg/L	37.3	38.3	65.3	2.0	63.2	0.7
Iron, mg/L	0.0	0.0	0.0	0.0	0.0	0.0
Potassium, mg/L	2.8	3.0	4.9	0.9	5.0	0.4
Magnesium, mg/L	10.0	10.4	17.9	0.6	17.5	0.2
Sodium, mg/L	15.8	16.4	28.0	4.0	28.3	2.6
Anions						
Chloride, mg/l	16.7	19.0	33.0	4.3	32.1	1.0
Fluoride, mg/L	1.0	1.1	na	na	na	na
Nitrate, mg NO_3/L	1.0	1.2	1.6	0.4	1.4	0.3
Phosphate, mg PO_4/L	0.0	0.0	0.0	0.0	0.0	0.0
Silica, mg SiO_2	5.0	4.9	7.3	0.8	7.2	0.4
Sulfate, mg SO_4/L	69.0	73.0	127.4	2.6	123.7	0.6
Other						
Alkalinity, mg $CaCO_3$/L	69.9	70.7	120.8	7.4	117.3	3.8
Total Inorganic Carbon, mg C/L	18.4	18.2	29.0	3.0	na	na
Hardness, mg $CaCO_3$/L	134.3	138.4	236.7	7.2	229.8	2.3
pH	7.8	7.4	7.7	6.1	7.6	na
Temperature, ^{o}C	26.6	27.9	29.8	29.8	29.9	29.7
TDS	218.0	223.0	318.0	21.4	311.0	11.6
Ionic Strength	0.0057	na	0.0005	na	na	na
TOC, mg/L	2.2	na	na	0.2	na	na
UV 254, m^{-1}	5.1	na	na	0.1	na	na

na – not analyzed

Table 2. Water quality rejection recovery performance of pilot nanofiltration membranes.

Analyte	4"X40" % Rejection	1"X12" % Rejection	Difference % Rejection	4"X40" % Recovery	1"X12" % Recovery	Difference % Recovery
Aluminum, mg/L	93.4	95.5	2.2	113.3	114.8	1.3
Calcium, mg/L	95.7	98.3	2.6	118.2	98.3	−20.2
Iron, mg/L	91.6	92.5	1.0	41.0	32.1	−27.7
Potassium, mg/L	80.3	87.3	8.0	93.0	106.1	12.4
Magnesium, mg/L	94.8	98.5	3.8	101.6	104.7	3.0
Sodium, mg/L	78.3	85.6	8.5	101.7	104.8	3.0
Chloride, mg/l	83.4	92.8	10.1	109.8	90.6	−21.2
Nitrate, mg NO_3/L	36.4	65.3	44.3	90.9	104.8	13.3
Silica, mg SiO_2	82.7	90.8	8.9	101.4	104.4	2.9
Sulfate, mg SO_4/L	96.6	99.3	2.7	102.7	105.0	2.2
Total Inorganic Carbon, mg C/L	84.7	na	na	100.9	na	na
Hardness, mg $CaCO_3$/L	94.6	98.3	3.8	na	na	na
TOC, mg/L	91.8	na	na	na	na	na
UV 254, m^{-1}	97.6	na	na	na	na	na

na – not analyzed

Table 3. Membrane cleaning solution analysis.

Species	Concentration in Cleaning Solution, mg/L	Weekly Recovery %	Feed in Cleaning Solution, %
Aluminum	18.9	94.6	16.1
Calcium	60.7	101.5	0.1
Iron	13.8	18.3	226.6
Magnesium	8.2	101.1	0.1
Silica	29.1	101.8	0.6
Sodium	11.6	101.9	0.1

Table 4. Comparison between nanofiltration and GAC filtration removal efficiency of selected parameters.

	Nanofiltration			GAC		
Analyte	Influent	Effluent	% Rejection	Influent	Effluent	% Removal
Bromide, ug/L	74.1	12.4	83.3	0.1	0.1	0.9
HPC, CFU/mL	19215.0	525.0	90.9	238.0	104.6	na
SDS THM, ug/L	14.2	4.0	96.4	149.5	38.8	71.7
MAX THM, ug/L	282.0	15.3	94.4	na	na	na
Spore-forming Bacteria, CFU/mL	10.0	2.0	80.0	na	na	na
SDS TOX. ug/L	246.0	11.3	95.6	228.5	38.8	83.0
MAX TOX. ug/L	336.0	17.0	94.7	na	na	na
Conductivity, us/cm	418.0	39.2	90.6	426.1	426.9	-2.5
TOC, mg/L	2.2	0.2	91.8	2.0	0.6	68.4
Particles*, units/mL	861.0	5.0	99.4	785.3	273.2	67.8
Turbidity, NTU	0.2	0.1	72.2	0.1	0.1	26.6
UV 254, m^{-1}	5.1	0.1	97.6	na	na	na
Calcium, mg/L	37.3	2.0	95.7	44.1	44.0	0.1
Magnesium, mg/L	10.0	0.6	94.8	9.4	9.8	-11.4
Hardness, mg $CaCO_3$	134.6	7.2	94.6	147.1	149.1	-1.7
Alkalinity, mg $CaCO_3$	69.9	7.4	--	77.4	77.3	0.3
Sulfate, mg SO_4/L	69.0	2.6	96.6	81.7	86.9	-6.9
TIC, mg C/L	18.4	3.0	84.7	na	na	na
pH, units	7.8	6.1	--	8.0	7.9	--

* Particles greater than 2 uM
na- not analyzed

TECHNICAL REPORT DATA

(Please read Instructions on the reverse before completir

1. REPORT NO. EPA/600/A-96/016	2.	3. R
4. TITLE AND SUBTITLE EVALUATION OF CORROSION ISSUES FOR NANOFILTRATION TREATED WATER		5. REPORT DATE 6. PERFORMING ORGANIZATION CODE
7. AUTHOR(S) (1) Darren A. Lytle, Michael R. Schock, and Thomas F. Speth and (2) Jeffrey Swertfeger		8. PERFORMING ORGANIZATION REPORT NO.
9. PERFORMING ORGANIZATION NAME AND ADDRESS (1) USEPA/NRMRL/WSWRD/TTEB 26 W. Martin Luther King Drive Cincinnati, OH 45268 (2) Richard Miller Treatment Plant City of Cinti Dept. of Water Works Cincinnati, OH 45228		10. PROGRAM ELEMENT NO. 11. CONTRACT/GRANT NO. In-House
12. SPONSORING AGENCY NAME AND ADDRESS NATIONAL RISK MANAGEMENT RESEARCH LABORATORY OFFICE OF RESEARCH AND DEVELOPMENT U.S. ENVIRONMENTAL PROTECTION AGENCY CINCINNATI, OHIO 45268		13. TYPE OF REPORT AND PERIOD COVERED Conference Paper 14. SPONSORING AGENCY CODE EPA/600/14

15. SUPPLEMENTARY NOTES Contact - Darren A. Lytle 513/569-7432
To be presented at the 1996 AWWA/USEPA Workshop - GAC and Membranes: Bench and Pilot Scale Evaluations - March 4-6, 1996 - Cincinnati, OH

16. ABSTRACT

Nanofiltration membranes are known to remove a large percentage of naturally occurring organics. Removals are often higher than 90 percent. This is also true for disinfection byproduct (DBP) precursors. Due to the properties, the Information Collection Rule may require water utilities of a certain size and water quality to evaluate either membrane treatment or granular activated carbon treatment. Along with high organic rejection properties, nanofiltration membranes are also known to remove a high percentage of hardness, alkalinity, and a fair amount of monovalent ions. Because of the rejection of inorganic species, steps must be taken to prevent collection of inorganic precipitation on the membrane. This often is completed by depressing the pH of the influent water, or by adding an antiscalent to the water. The permeate water of nanofiltration membranes is typically a low pH water that has little buffering capacity. The nanofiltration product water is therefore very corrosive. Steps must be taken to avoid lead and copper leaching in plumbing materials found in distribution systems and private residences. It is the objective of this paper to describe the organic and inorganic constituents that are rejected by a nanofiltration membrane, to determine the corrosivity of nanofiltration permeate water by conducting pipe loop experiments, and to evaluate method for mitigating corrosion problems.

17. KEY WORDS AND DOCUMENT ANALYSIS

a. DESCRIPTORS	b. IDENTIFIERS/OPEN ENDED TERMS	c. COSATI Field/Group
Nanofiltration Corrosion Copper Lead		

18. DISTRIBUTION STATEMENT RELEASE TO PUBLIC	19. SECURITY CLASS *(This Report)* UNCLASSIFIED 20. SECURITY CLASS *(This page)* UNCLASSIFIED	21. NO. OF PAGES 22. PRICE

EPA Form 2220-1 (Rev. 4-77) PREVIOUS EDITION IS OBSOLETE