CHAPTER 5

COSTS OF BASELINE AND ALTERNATIVE WASTE MANAGEMENT PRACTICES

TABLE OF CONTENTS

		Page
1.	Introduction and Background	1
2.	Format and Sources of the Cost Estimates	3
3.	Relationship of the Cost Estimates to the Waste Management Scenarios	4
4.	Surface Impoundments	9
5.	Monitoring and Site Management	22
6.	Class I and Class II Injection Wells	26
7.	Solidification	34
8.	Incineration	44
9.	Landfarming	45
10.	Substitution	54
11.	Waste Volume Reduction	60
12.	Transportation	64
13.	References	67

Appendix A: Surface Impoundment Model Runs from the Pope-Reid Facilities Design Tool Cost Model.

Appendix B: Costs for Class I and Class II Injection Wells.

Appendix C: Costs for Class I and Class II Injection Well Site Facilities.

Appendix D: Annual Operating Costs for Class I and Class II Injection Wells.

Appendix E: Landfarming Model Runs from the Pope-Reid Land Treatment Computer Cost Model.

LIST OF TABLES

		Page
3-1	Criteria for Intermediate Scenario	7
3-2	Relationship of Waste Management Practices to Waste Management Scenarios	10
4-1	Summary of Cost Components for Surface Impoundments	12
4-2	Surface Impoundment Assumptions	14
4-3	Capital Costs of Surface Impoundments	15
4-4	Closure Costs of Surface Impoundments	16
4-5	Annual Operating Costs of Surface Impoundments	18
4-6	Regional Cost Factors	20
4-7	Annualized Surface Impoundment Costs/Annualized Per Barrel Surface Impoundment Costs	21
5-1	Cost Elements for Monitoring and Site Management	23
5-2	Capital Costs of Monitoring	24
5-3	Closure Costs of Monitoring	25
5-4	Annualized Monitoring Costs/Annualized Per Barrel Monitoring Costs	27
6-1	Cost Components of Class I and Class II Injection Wells	30
6-2	Class I Injection Well Costs	31
6-3	Class II Injection Well Costs	33
6-4	Annualized Per-Barrel Injection Well Costs by Basin	36
6-5	Annualized Per-Barrel Injection Well Costs by Region	37
7-1	Costs of Solidification	40
9-1	Landfarming Cost Components	46

LIST OF TABLES (CONT.)

		Page
9-2	Landfarming Cost Components by Waste Management Scenario	48
9-3	Landfarming Model's Drilling Mud Waste Stream	51
9-4	Costs of Constructing, Maintaining, and Closing a Commercial Landfarm Handling Drilling Wastes	52
9-5	Annualized Landfarming Costs by Region/Annualized Per Barrel Landfarming Costs by Region	53
10-1	The Major Constituents of Drilling Fluids	55
10-2	Cost of Mineral for Diesel Oil Substitution for a 15,000 Foot Well	59
10-3	Barite Costs for Typical Wells in Each Region	61
11-1	Rental Rates for Solids Control Equipment	63
12-1	Cost of Transporting One Barrel of Waste Varying Distances	66

LIST OF FIGURES

		Page
1	Class I Facilities Schematic	32
2	Class II Facilities Schematic	35

1. Introduction and Background

EPA's Office of Solid Waste is currently preparing a study and a Report to Congress concerning drilling fluids, cuttings, produced water, and other wastes generated during oil and gas exploration, development, and production as mandated under Section 8002(m) of RCRA. By statute, the study must include, among other topics, an analysis of alternatives to current waste disposal methods in this industry, and the impact of these alternatives on oil and gas exporation, development, and production.

To assess the impact of alternative waste management practices on this industry, it is necessary to identify current (i.e., baseline) waste disposal practices and estimate their costs; and then to compare these baseline costs to the cost of alternative waste management practices. This preliminary report provides estimates of the costs of baseline and alternative waste management practices. The material presented here will be used in the impact assessment and also will be incorporated into the final Report to Congress and supporting technical materials.

A list of baseline and alternative waste management practices was presented in Part I, Chapter I of the EPA/OSW Technical Report entitled Wastes from the Exploration, Development, and Production of Crude Oil, Natural Gas, and Geothermal Energy (1986). This list included the following practices:

Primary Baseline Practices

- Reserve Pit Storage and Disposal
- Injection of Production Fluids in Class II Wells
- Road Oiling and Spreading of Tank Bottoms and Sludges

Alternative Practices

- Injection of Production Fluids in Class I Wells
- Monitoring and Site Management Practices
- Volume Reduction
- Solidification
- Incineration
- Landfarming
- Treatment and Discharge of Liquid, Pumpable Waste
- Disposal in Lined Pits
- Disposal in a Secure Facility
- Substitution of Less Toxic Components

All of these baseline and alternative waste management practices are addressed in this report with the exception of "Road Oiling and Spreading of Tank Bottoms and Sludges" and "Treatment and Discharge of Liquid, Pumpable Waste." The former is omitted because it was decided by EPA that, in the interest of time, the effort in this report would focus on the most significant wastes: produced water from production operations and muds and cuttings from drilling operations. Cost estimates for the latter practice, treatment and discharge, are now being developed and will be included in later drafts.

Cost estimates for the baseline and alternative waste management practices are presented in Sections Four through Eleven. Several of the baseline and alternative practices ("Reserve Pit Storage and Disposal," "Disposal in Lined Pits," and "Disposal in a Secure Facility") are treated together in Section Four, Surface Impoundments. Injection of produced fluids in Class I and Class II injection wells are treated together in Section Six. Otherwise, each baseline or

alternative practices is considered in a separate, designated section.

Section Twelve, Transportation Costs, provides information on the cost of transporting wastes to offsite facilities. The costs described in Section Twelve are applicable to any of the individual waste management practices that require offsite disposal.

2. Format and Sources for the Cost Estimates

The cost estimates presented here were developed from a number of sources. For each baseline and alternative waste management practice, EPA literature, data bases, and computer models were reviewed to determine whether applicable cost estimates had been prepared in support of other EPA programs. Where such estimates were available, these estimates were adapted for this report. Specifically, costs for surface impoundments, landfarming, and monitoring and site management were adapted from computer models developed by Pope-Reid Associates, Inc., for EPA. These computer models were accessed through the EPA mainframe computer in Research Triangle Park, North Carolina. Costs for incineration were also adapted from an EPA study providing cost estimates for a number of hazardous waste options (U.S. EPA, 1985).

Where existing EPA studies were not applicable, cost estimates were developed from other sources. Because Class I and Class II injection wells are the principal produced water disposal option, original engineering cost estimates were developed for these disposal options. For the remaining disposal options (substitution, volume reduction, solidification), cost estimates were developed through contacts with vendors and other industry sources.

All of the baseline and alternative waste management practices entail both capital and operating costs to construct and operate disposal facilities. Capital cost items were annualized using an 8 percent discount rate and added to annual operating costs to generate total annual costs for the facility. Annual costs for the facility were then divided by the facilities' annual waste handling capacity (in barrels) to generate a cost per barrel of waste disposed. Both produced water disposal costs and drilling waste (i.e., muds and cuttings) disposal costs are expressed on a dollars-per-barrel basis.

In the impact assessment, the dollars-per-barrel cost estimates (e.g., for muds and cuttings disposal) can be multiplied by the number of barrels of waste generated by a model facility to estimate the cost of waste disposal for the model facility. Costs for baseline and alternative practices, so generated, can be compared in order to estimate the impact of the alternative practice on the facility's profitability. Thus, the standardization of cost estimates in this report facilitates the impact assessment. Further, for the purpose of consistency and comparability, all costs in this report are expressed in 1985 dollars; and all costs were regionalized using the eleven oil and gas regions selected for the Report to Congress.

3. Relationship of Waste Management Practices to Waste Management Scenarios

In order to determine the potential costs of changes in oil and gas waste disposal requirements, three hypothetical waste management scenarios have been defined. In the "Baseline Scenario," existing practices and regulations are assumed to remain unchanged in the future. In the "Intermediate Scenario," wastes are controlled more stringently than is presently common

in most states, but the wastes are not considered to be covered by Subtitle C regulations. In the "RCRA Subtitle C Scenario," it is assumed that the wastes will be covered under the Subtitle C regulations.

Because the scenarios represent varying degrees of regulatory stringency, the waste management practices that can be applied will vary under each scenario. The discussion which follows describes the waste management scenarios and identifies the primary waste management practices that would be applied under each scenario.

Baseline Scenario

The Baseline Scenario represents the current situation and therefore encompasses the waste management practices now permitted under state and federal regulations. For drilling fluids and cuttings, the use of an unlined pit is by far the most common means of disposal. The pit is dewatered by evaporation or vacuum truck upon completion of drilling. The pit is then backfilled, thereby burying the wastes.

For produced water, the primary disposal method in the Baseline Scenario is injection in Class II wells. In some cases (e.g., stripper well operations in Appalachia, operations in western states where discharges are allowed for beneficial use), produced waters are discharged to land or water. Where surface discharges are currently practiced, the wastes are discharged untreated (except for water/hydrocarbon separation). Thus, the cost of this latter option is negligible and is not covered in this report.

Intermediate Scenario

In the Intermediate Scenario, oil and gas wastes are divided into three levels, depending on the type and concentration of constituents present in the waste. The Level 1 wastes are those in which constituents of concern such as heavy metals, organics and chlorides are not present or are present at very low concentrations. The types of wastes likely to fall in Level 1 would include freshwater bentonite drilling fluids having minimal levels of additives, and produced water with low levels of chloride and dissolved solids such as those currently classified for "beneficial use." Table 3-1 shows the criteria used to define Level 1 wastes.

The types of wells likely to generate Level 1 wastes are primarily shallow (e.g., 3,000 feet drilling depth). Additives such as barite, diesel oil, biocides, and corrosion inhibitors may not be required in such wells.

The primary disposal options applicable to Level 1 wastes are current practices (i.e., unlined pit disposal for muds and cuttings, Class II well injection for produced water). Additionally, where current rules now allow surface discharges of produced water, this practice would still be permitted. However, produced waters not meeting the criteria for Level 1 wastes could no longer be discharged.

Level 2 wastes include all produced waters that do not meet the Level 1 criteria (Table 3-1); and all drilling wastes meeting the metals and pH requirements of Level 1 waste but with less stringent criteria for chlorides and oil and grease ($\leq$ 5000 ppm and $\leq$ 3 percent by dry weight, respectively). The only disposal options for Level 2 produced water is Class II well injection. The permissible disposal options for Level 2

TABLE 3-1

CRITERIA FOR INTERMEDIATE SCENARIO

DRILLING WASTES	PRODUCED WATER
Level 1	Level 1
pH 6-9	Chloride ≤ 500 ppm
Arsenic ≤ 10 ppm	Total dissolved solids ≤ 2000 ppm
Barium ≤ 2000 ppm	
Cadmium ≤ 1 ppm	Levels 2 and 3
Chromium ≤ 500 ppm	All produced waters exceeding Level 1 Criteria
Lead ≤ 500 ppm	
Mercury ≤ 10 ppm	
Selenium ≤ 10 ppm	
Silver ≤ 200 ppm	
Zinc ≤ 500 ppm	
Oil and grease ≤ 1 percent dry weight	
Chloride ≤ 2000 ppm	
Level 2	
Metals and pH - Same as Level One	
Chlorides ≤ 5,000 ppm	
Oil and Grease ≤ 3 percent dry weight)	
Level 3	
All drilling wastes exceeding Level Two criteria.	

0277V

drilling wastes include burial in lined pits, and landfarming with site management.

There is no distinction between Level 2 and Level 3 wastes for produced water. Thus, all produced water not meeting Level 1 criteria must be injected in a Class II well. For drilling wastes, Level 3 wastes are those which exceed the Level 2 criteria. For Level 3 drilling wastes, the primary permissible disposable options are disposal in a lined pit with site management procedures, landfarming with site management, and solidification.

RCRA Subtitle C Scenario

Under this scenario, oil and gas wastes are covered under Subtitle C of RCRA. Those wastes that are defined as hazardous must be disposed of in approved Subtitle C facilities. Wastes would be considered hazardous if they fail the EP or TCLP tests for toxicity, corrosivity criteria, or if they contain contaminants that are listed as hazardous under the RCRA regulations (i.e., listed wastes).

Produced waters that were defined as hazardous would be disposed of in a Class I injection well. Drilling wastes that were defined as hazardous would be disposed of in a secure facility with a triple-lined pit and site management procedures, a RCRA-permitted landfarming facility with site management procedures compatible with RCRA, or incineration.

Under the RCRA Subtitle C Scenario, wastes that are not considered hazardous are disposed of in accordance with the Intermediate Scenario. Thus, the Intermediate Scenario and the RCRA Subtitle C Scenario differ only with respect to hazardous wastes.

Summary

Table 3-2 summarizes the waste management practices that are applicable under each waste management scenario and level. The costs of these waste management practices are described in Sections Four through Twelve and in the Appendices which follow. Two of the waste management practices, waste volume reduction and substitution, are not included in Table 3-2. These practices are omitted because they are not final disposal options, but rather are intermediate measures that may reduce the costs of final disposal. The applicability of these latter measures is presented further in Sections Ten and Eleven. Solidification, which is a final disposal option for the Intermediate Scenario (Level 3), might also be used as a volume reduction method under the RCRA Subtitle C Scenario if the solidified waste can then be delisted or meet criteria as a nonhazardous waste.

4. Surface Impoundments

Surface impoundments are currently the most widely used onsite storage and disposal method for drilling mud wastes. Used muds and cuttings are maintained in these impoundments during the drilling operation. Upon completion of drilling, the wastes are dewatered either by evaporation or by a vacuum truck. The dewatered wastes are usually disposed in place or landspread on surrounding fields. In some cases, these wastes are disposed offsite at commercial facilities which were explicitly designed for the disposal of oilfield wastes. Large-scale commercial pits are operating in the largest oil producing states including Texas, Oklahoma, Louisiana, Kansas, and Wyoming. In California, most drilling muds are removed for offsite disposal (California Division of Oil and Gas, 1986).

TABLE 3-2

RELATIONSHIP OF WASTE MANAGEMENT PRACTICES TO WASTE MANAGEMENT SCENARIOS

SCENARIO	DISPOSAL METHODS FOR DRILLING WASTES	DISPOSAL METHODS FOR PRODUCED WATER
Baseline	Unlined Pit	Class II Injection/ Beneficial Use
Intermediate		
Level 1	Unlined Pit	Class II Injection/ Beneficial Use
Level 2	Single-Liner Pit	Class II Injection
	Landfarming with Site Management	
Level 3	Single-Liner Pit with Site Management	Class II Injection
	Landfarming with Site Management	
	Solidification with Burial	
RCRA Subtitle C		
Non-Hazardous	Same as Intermediate Scenario	Same as Intermediate Scenario
Hazardous	Triple-Liner Pit with RCRA Site Management	Class I Injection
	Landfarming with RCRA Site Management	
	Incineration	

0283V

Four alternative impoundment configurations were analyzed using the Liner Location Model and Facilities Design Tool Cost Model developed by Pope-Reid Associates. These alternatives are differentiated between onsite and offsite locations and by varying levels of sophistication in liner technologies. For all four alternatives, capital, closure, and operation and maintenance costs were calculated. These costs were then annualized, and per-barrel costs were estimated.

Table 4-1 details the cost elements of the four surface impoundment configurations and identifies the Waste Management Scenario under which each configuration can be utilized. These configurations have been developed to represent typical oilfield conditions and to meet the requirements of the waste management scenarios. Under more stringent regulatory scenarios, additional pollution control elements are added. For the Intermediate Scenario Level 3 and the RCRA Subtitle C Scenario, costs include not only the elements listed in Table 4-1, but also the costs of site management procedures. These latter costs are presented separately in Section Five.

Costs for an unlined 0.25 acre onsite surface impoundment are estimated. This unlined pit is assumed to be excavated and closed in one year. At closure, the pit is dewatered by evaporation and the wastes are mixed with earth fill.

Costs are also estimated for two single-liner surface impoundments - a 0.25-acre onsite pit and a 15.0-acre offsite facility. Both facilities are lined with a single 30-mil HDPE synthetic liner. To protect the liner from tears, a geotextile support liner is placed below the synthetic liner in each pit. In the 15-acre offsite pit a layer of sand, 0.3 meters deep, is placed above the synthetic liner to protect it during dredging activities. At closure, the wastes are dewatered and the pits are filled with earth fill. A 30-mil PVC liner is then placed over the filled pit, followed by 0.3 meters of top soil.

TABLE 4-1

SUMMARY OF COST COMPONENTS FOR SURFACE IMPOUNDMENTS

ALTERNATIVE	CAPITAL COSTS	O&M COSTS	CLOSURE COSTS	WASTE MANAGEMENT SCENARIO
Unlined Pit	o Pit excavation (.25 acres) o Clearing and grubbing o Contingency o Contractor fee	o Negligible	o Pit burial (earth fill only) o Contingency o Contractor Fee	o Baseline and Intermediate Level 1
One-liner Pit (buried on site)	o Clearing and grubbing o Pit excavation (.25 acres) o Berm construction (gravel and vegetation) o 30-mil synthetic liner o Liner protection (geotextile sublinner) o Engineering, contractor, and inspection fee o Contingency	o Negligible	o Pit burial (earth fill) o Capping - 30 mil PVC synthetic membrane - top soil o Revegetation o Engineering, contractor, and inspection fee o Contingency	o Intermediate Level 2
Commercial One Liner Pit	o Pit Excavation (15 acres) o Same costs as onsite one-linear pit with addition of: - land cost - utility site work pumps - spare parts - dredging equipment - inlet/outlet structures - Construction and field expenses	o Operating labor - Clerical staff - Foremen o Maintenance labor and supplies o Utilities o Plant overhead o Dredging	o Same costs as onsite one-liner pit o Solidification o Fuel liquid removal and treatment	o Intermediate Level 2 and Intermediate Level 3 with Site Management
Commercial Triple Liner, Secure Pit	o Pit Excavation (15 acres) o Same costs as commercial one-liner pit with the addition of: - additional pit liners - clay liner replaces geotextile sublinner	o Same costs as commercial one-liner pit	o Same costs as onsite one-liner pit with addition of: - additional liners for cap o Equipment decontamination	o RCRA Subtitle C Scenario for Hazardous Wastes with Site Management

0284V

The fourth facility is a 15.0-acre offsite surface impoundment that utilizes a triple liner. The bottom liner is 0.92 meters of clay. It is assumed that the clay needs to be imported from offsite. Above the clay is a 30-mil HDPE liner, followed by a 0.3 meter-deep layer of sand, a second 30-mil HDPE liner, and a second layer of sand. At closure, the facility is covered with 0.6 meters of clay, a 30-mil PVC liner, a layer of sand, a geotextile filter fabric, and a layer of top soil 0.6 meters deep.

The major technical and economic assumptions incorporated into the surface impoundment costs are listed in Table 4-2. In addition, it is assumed that offsite facilities would need to be dredged annually. At closure, all remaining free liquid wastes are removed from the offsite facilities and treated. All remaining wastes are then solidified.

The costs for impoundment construction and cover are calculated using the unit costs in Table 4-2. These unit costs were developed by Pope-Reid Associates. Tables 4-3 and 4-4 show the surface impoundment cost estimates generated using these unit costs. The facility costs are shown in more detail in Appendix A.

Impoundment construction costs range from $7.5 thousand for the unlined pit to $4.7 million for the triple-liner pit. The most significant factor in this cost range is the size of the pit. For single-liner surface impoundments, costs range from $19 thousand for the onsite pit to $2.2 million for the offsite pit. The cover costs range from $8.9 thousand for the unlined pit to $4.4 million for the triple-liner facility.

As shown in Tables 4-3 and 4-4, the impoundment construction and cover costs represent a major portion of capital and closure costs. However, a number of other capital cost items are significant. At offsite facilities, land,

TABLE 4-2

SURFACE IMPOUNDMENT ASSUMPTIONS

Operating depth:		3 meters
Side Slope of Containment (Run/Rise):		2.5:1
Bottom Slope:		2 Percent
Operating volume at Closure:		50 Percent
Facility Life (Off-Site):		20 Years
Berm design (line facilities):		
Berm freeboard:	0.6 m	
Width at top:	2 m	
Slide Slope:	2:1	
Revegation (Lined Facilities):		Hydraulic Seeding

Unit Cost Assumptions ($1985)

Excavation	3.65 $/Cu M
Off-site Clay	19.00 $/Cu M
Top Soil	14.90 $/Cu M
Earth Fill	5.95 $/Cu M
Sand	12.35 $/Cu M
30-mil HDPE Liner	5.38 $/Sq. M
30-mil PVC liner	3.23 $/Sq. M.
Geotextile Filter Fabric	1.06 $/Sq. M
Geotextile Support Fabric	1.76 $/Sq. M

Source: Unit Cost Assumptions were developed by Pope-Reid Associates. All other assumptions were developed by ERG, 1987.

0279V

TABLE 4-3

CAPITAL COSTS OF SURFACE IMPOUNDMENTS

CAPITAL COSTS (YEAR 1) ($1,000)	SURFACE IMPOUNDMENTS			
	UNLINED .25 AC	SINGLE .25 AC	SINGLE 15.0 AC	TRIPL 15.0 A
DIRECT COSTS:				
LAND			141.4	141.
CLEARING AND GRUBBING	5.5	5.5	60.8	60.8
SIGNS				
UTILITIES SITE WORK			8.0	8.0
GROUNDWATER WELLS				
PORTABLE PUMP			13.8	13.8
(1) DREDGING EQUIPMENT			155.8	155.8
INLET/OUTLET STRUCTURES			18.8	18.8
(2) IMPOUNDMENT CONSTRUCTION	7.5	19.2	2,218.7	4,740.4
TOTAL DIRECT COSTS	13.0	24.7	2,817.1	5,138.
INDIRECT CAPTIAL COSTS:				
RCRA INITIAL COSTS				
ENGINEERING FEE (10% RCRA,5% REST)		1.2	130.9	513.9
(3) INSPECTION FEE (5% RCRA,2.5% REST)		0.5	55.5	237.0
CONSTRUCTION & FIELD EXPENSES (5%)			130.9	256.9
CONTRACTOR FEE (10%)	1.3	2.5	261.7	513.9
SPARE PARTS INVENTORY (1%)			26.2	51.4
SUBTOTAL INDIRECT CAPITAL	1.3	4.2	605.2	1,573.1
CONTINGENCY (15%)				1,006.8
(10%)	1.4	2.9	322.2	
TOTAL INDIRECT CAPTIAL	2.7	7.1	927.4	2,579.9
TOTAL FACILITY COST (YEAR 1)	15.7	31.8	3,544.5	7,718.7

SOURCE: POPE-REID ASSOCIATES' LINER LOCATION MODEL AND FACILITIES DESIGN TOOL COST MODEL.

(1) DREDGING EQUIP. IS ALSO PURCASED IN YEAR 11.
(2) IMPOUNDMENT CONSTRUCTION COSTS WERE LATER REGIONALIZED
(3) TAKEN AS A PERCENT OF IMPOUNDMENT CONSTRUCTION AND GROUNDWATER WELLS.

TABLE 4-4

CLOSURE COSTS OF SURFACE IMPOUNDMENTS

CLOSURE COST (YEAR 21) ($1,000)	SURFACE IMPOUNDMENTS			
	UNLINED .25 AC	SINGLE .25 AC	SINGLE 15.0 AC	TRIPLE 15.0 AC
FREE LIQUID REMOVAL AND TREATMENT			3,790.0	53,892.7
SOLIDIFICATION			5,579.5	5,579.5
EQUIP. DECONTAMINATION				1.7
(1) COVER	8.9	20.3	2,551.2	4,362.1
ENGINEERING FEE (10% RCRA,5% REST)		1.0	127.8	436.2
INSPECTION FEE (5% RCRA,2.5% REST)		0.5	63.8	218.1
CONTRACTOR FEE (10%)	0.9	2.0	255.1	436.2
MONITORING				
CERTIFICATION,SUPERVISION				
SUBTOTAL	9.8	23.8	12,367.2	64,726.5
CONTINGENCY FEE (15% RCRA,10% REST)	1.0	2.4	1,236.7	9,709.0
TOTAL CLOSURE (YEAR 21)	10.8	26.2	13,603.9	74,435.5

SOURCE: POPE-REID ASSOCIATES' LINER LOCATION MODEL AND FACILITIES DESIGN TOOL COST MODEL.

(1) COVER COSTS WERE LATER REGIONALIZED.

clearing and grubbing, and dredging equipment purchases represent a large portion of the remaining direct capital costs. The dredging equipment is assumed to have a capital cost of $156 thousand and an operating life of 10 years. Therefore, new equipment will need to be purchased after 10 years for the offsite facilities. A number of indirect capital costs have also been estimated.

In addition to cover, the other major costs for facility closure are free liquid removal and solidification for the offsite facilities. These two costs comprise a much larger portion of the closure costs than does cover. Free liquid removal and treatment costs $3.8 million for the single-liner facility and $53.7 million for the triple-liner facility. Liquid wastes from the single-liner facility are disposed of in a Class II injection well. Liquid wastes from the triple-liner facility are treated at a hazardous waste facility. Solidification of all remaining solids at both offsite facilities was estimated at $5.6 million.

Annual operation and maintenance costs for the offsite facilities are provided in Table 4-5. For onsite facilities, which operate for less than 1 year, all costs are included in Tables 4-3 and 4-4. Maintenance labor and supplies are the most significant O&M cost component. These have been estimated at 2 percent of the total facility costs. The rest of the costs are primarily direct and indirect labor costs.

For the offsite facilities, annual dredging is a very significant cost component. Wastes from the single-liner facility are disposed at a sanitary landfill at a cost of $1.3 million annually. Wastes from the triple-liner facility are solidified and disposed at a hazardous waste site at a cost of $15.4 million annually. Dredging occurs annually in years 2 through 20. The dredging costs are based on the dredging component of Pope-Reid's Facilities Design Tool Cost Model.

TABLE 4-5

ANNUAL OPERATING COSTS OF SURFACE IMPOUNDMENTS

OPERATING AND MAINTENANCE (YEARS 1-20) ($1,000)	SURFACE IMPOUNDMENTS			
	UNLINED .25 AC	SINGLE .25 AC	SINGLE 15.0 AC	TRIPLE 15.0 AC
DIRECT O&M COSTS:				
OPERATING LABOR @ 28,500			19.9	19.9
CLERICAL STAFF @ 15,000			1.9	1.9
FOREMEN @35,000			8.8	8.8
TOTAL DIRECT LABOR			30.8	30.8
(1) MAINT. LABOR & SUPPLIES			70.9	154.4
UTILITIES			2.0	2.0
GROUNDWATER MONITORING				
TOTAL DIRECT O&M			103.5	187.0
INDIRECT O&M				
FRINGE BENEFITS (% DIRECT LABOR)			7.7	7.7
PLANT OVERHEAD (% DIRECT LABOR)			15.3	15.3
TOTAL INDIRECT O&M	0.0	0.0	23.0	23.0
TOTAL ANNUAL O&M (YEARS 1-20)	0.0	0.0	126.5	210.0
ANNUAL DREDGING:				
DISPOSAL AT SANITARY LANDFILL	0.0	0.0	1,774.8	0.0
DISPOSAL AT HAZARDOUS WASTE SITE	0.0	0.0	0.0	15,433.4

SOURCE: POPE-REID ASSOCIATES' LINER LOCATION MODEL AND FACILITIES DESIGN TOOL COST MODEL.

(1) COMPUTED AS A PERCENT OF TOTAL FACILITY COST

The point estimates in these tables are likely to vary by ± 10-20 percent, depending on regional conditions. Regional cost factors have been developed using Means Site Work Cost data. These regional factors, shown in Table 4-6, were applied to the impoundment construction and cover costs to generate regional cost estimates.

Costs are also likely to be affected by regional availability of materials such as clay. To the extent that onsite clay is available, the RCRA cost estimates may need to be adjusted downward. The use of onsite clay will typically reduce costs by $12.30/m^3 of clay material used. Local conditions may also negate the need for geotextile filter fabrics. These fabrics are intended to protect the liner from jagged objects on the pit surface that may rip the liner. The use of larger or smaller pit sizes will also greatly affect total costs.

The costs in Tables 4-3, 4-4, and 4-5 were annualized using an 8 percent interest rate. The annualized costs are shown in Table 4-7 for the nine regions with active drilling programs. The costs are also shown on a per-barrel basis in Table 4-7. The per-barrel costs at each facility were developed based on facility capacity. The 0.25-acre site has a 13 thousand barrel capacity, and the 15-acre site has a 2.4 million barrel capacity. The flow rate for the 15-acre site is 3.0 million barrels per year. The per-barrel costs for the 0.25-acre single-liner facility ($5/barrel), and the 15-acre triple-liner facility ($7/barrel) are the highest among the options analyzed. Liner costs are an important component of the per-barrel costs. The installation of a single liner in the onsite unlined pit increases the per-barrel costs from $2/barrel to $5/barrel. Similarly, the triple-liner facilities ($7/barrel) are roughly seven times more expensive than the single-liner offsite facility ($1/barrel).

TABLE 4-6

REGIONAL COST FACTORS

REGION	FACTOR[a]
Region 2	103.9
Region 4	95.9
Region 5	97.0
Region 6	95.5
Region 7	104.0
Region 8	97.0
Region 9	97.1
Region 10	99.9
Region 11	143.1

[a]National Factor = 100

Source: Based on aggregated city cost factors in Means Site Work Cost Data, 1986.

0177V

TABLE 4-7

ANNUALIZED SURFACE IMPOUNDMENT COSTS
($1,000 1985)

REGION	UNLINED .25 AC	SINGLE .25 AC	SINGLE 15.0 AC	TRIPLE 15.0 AC
NATIONAL	28.5	58.0	2,378.9	18,486.8
REGION 2	27.2	60.0	2,393.8	18,525.4
REGION 4	25.7	56.1	2,358.1	16,445.7
REGION 5	28.0	58.5	2,383.9	18,458.7
REGION 6	25.7	55.8	2,357.4	16,441.8
REGION 7	27.3	60.2	2,394.3	16,528.5
REGION 8	28.0	58.5	2,383.9	18,458.7
REGION 9	28.0	58.5	2,384.3	18,457.6
REGION 10	28.5	58.0	2,378.4	18,485.8
REGION 11	35.0	80.1	2,584.0	18,918.3

ANNUALIZED PER BARREL
SURFACE IMPOUNDMENT COSTS

REGION	UNLINED .25 AC	SINGLE .25 AC	SINGLE 15.0 AC	TRIPLE 15.0 AC
NATIONAL	$2.04	$4.48	$0.97	$6.78
REGION 2	$2.09	$4.62	$0.98	$6.78
REGION 4	$1.98	$4.32	$0.97	$6.75
REGION 5	$2.00	$4.35	$0.97	$6.75
REGION 6	$1.98	$4.29	$0.97	$6.74
REGION 7	$2.10	$4.63	$0.98	$6.78
REGION 8	$2.00	$4.35	$0.97	$6.75
REGION 9	$2.00	$4.35	$0.97	$6.75
REGION 10	$2.04	$4.46	$0.97	$6.76
REGION 11	$2.69	$6.16	$1.05	$6.94

SOURCE: ERG ESTIMATES.

NOTE:
ALL OF THE COSTS ASSOCIATED WITH THE
0.25 ACRE FACILITIES OCCUR IN YEAR 1.

5. Monitoring and Site Management

Costs for monitoring and site management practices were developed costs using Pope-Reid Associates' Liner Location Model and Facilities Design Tool Cost Model. These practices are required, in conjunction with surface impoundments, under the Intermediate Level 3 and RCRA Subtitle C Scenario. Costs were developed for leachate collection, runon/runoff systems, wet well and pump, groundwater wells and post-closure costs.

In order to incorporate leachate collection systems and runoff systems into the surface impoundment, additional liners are required. For example, to place a leachate collection system below a single 30-mil HDPE liner, an additional sand and synthetic liner was added to the facility. The second liner ensures that none of the leachate is absorbed into the soil prior to entering the leachate system. In order to accommodate these additional liners, slightly deeper pits must be excavated to maintain the intended operating capacity. These design constraints only affect the single-liner facility; the triple-liner facility already has the necessary additional liners. For this reason, the monitoring and site management costs for the single-liner facility are significantly greater than the costs for the triple-liner facility. The cost elements for monitoring and site management are summarized in Table 5-1.

The capital costs associated with facility monitoring and site management are presented in Table 5-2. The impoundment construction item includes the costs associated with leachate collection, wet well and pump, and the costs associated with facility design changes. These costs are provided in more detail in Appendix A.

Closure and post-closure costs are presented in Table 5-3. In Table 5-3, the cover item contains costs for cover drainage

TABLE 5-1

COST ELEMENTS FOR MONITORING AND SITE MANAGEMENT

ALTERNATIVE SCENARIOS	CAPITAL COSTS	O&M COSTS	CLOSURE COSTS	POST-CLOSURE COSTS	WASTE MANAGEMENT
Site Management	o Monitoring wells o Leachate collection systems - drainage tiles - leachate collection layer (sand or gravel) for single liner case only - leachate collection liner for single liner case only o Signs/fencing o RCRA permitting (for RCRA scenario)	o Monitoring well sampling and laboratory fees o Leachate treatment	o Soil poisoning (to prevent disruption by long-rooted plants) o Cover drainage tile - collection layer (sand or gravel) - geotextile filter fabric in one-liner pit o Monitoring o Certification, supervision	o Monitoring well sampling o Leachate treatment o Notice to local authorities o Notation on property deed o Facility inspection o Maintenance and repair o Cover replacement o Engineering and inspection fees o Contingency	o Intermediate Level 3 and RCRA Subtitle C Scenario

0286V

TABLE 5-2

CAPITAL COSTS OF MONITORING

CAPITAL COSTS (YEAR 1) ($1,000)	MONITORING	
	SINGLE 15.0 AC	TRIPLE 15.0 AC
DIRECT COSTS:		
LAND		
CLEARING AND GRUBBING		
SIGNS	0.9	0.9
UTILITIES SITE WORK		
GROUNDWATER WELLS	92.8	92.8
PORTABLE PUMP		
DREDGING EQUIPMENT		
INLET/OUTLET STRUCTURES		
IMPOUNDMENT CONSTRUCTION	733.5	47.0
TOTAL DIRECT COSTS	827.0	140.5
INDIRECT CAPTIAL COSTS:		
RCRA INITIAL COSTS		17.2
ENGINEERING FEE (10% RCRA,5% REST)	41.3	14.0
INSPECTION FEE (5% RCRA,2.5% REST)	20.6	7.0
CONSTRUCTION & FIELD EXPENSES (5%)	41.3	7.1
CONTRACTOR FEE (10%)	82.7	14.0
SPARE PARTS INVENTORY (1%)	8.2	1.4
SUBTOTAL INDIRECT CAPITAL	194.1	80.7
CONTINGENCY (15%)		30.2
(10%)	102.1	
TOTAL INDIRECT CAPTIAL	296.2	90.9
TOTAL FACILITY COST (YEAR 1)	1,123.2	231.4

SOURCE: POPE-REID ASSOCIATES' LINER LOCATION MODEL AND FACILITIES DESIGN TOOL COST MODEL.

TABLE 5-3

CLOSURE COSTS OF MONITORING

CLOSURE COST (YEAR 21) ($1,000)	MONITORING	
	SINGLE 15.0 AC	TRIPLE 15.0 AC
FREE LIQUID REMOVAL AND TREATMENT		
SOLIDIFICATION		
EQUIP. DECONTAMINATION		
COVER	408.5	88.5
ENGINEERING FEE (10% RCRA,5% REST)	20.4	8.7
INSPECTION FEE (5% RCRA,2.5% REST)	10.2	4.3
CONTRACTOR FEE (10%)	40.9	8.7
MONITORING	5.7	5.7
CERTIFICATION,SUPERVISION	8.4	8.4
SUBTOTAL	492.1	120.3
CONTINGENCY FEE (15% RCRA,10% REST)	49.2	18.0
TOTAL CLOSURE (YEAR 21)	541.3	138.3

POST-CLOSURE COSTS ($1,000)	SINGLE 15.0 AC	TRIPLE 15.0 AC
MONITORING DURATION:	5 YEARS	30 YEARS
YEAR 21:		
NOTICE TO LOCAL LAND AUTHORITY	2.9	2.9
NOTATION ON PROPERTY DEED	0.5	0.5
YEAR 21-50:		
FACILITY INSPECTION	0.1	0.1
ROUTINE MAINT. & REPAIRS		
MOWING	1.4	1.4
FERTILIZING	4.0	4.0
GROUNDWATER MONITORING	9.5	9.5
LEACHATE MANAGEMENT	30.8	30.8
RODENT CONTROL (BI-ANNUAL SPRAYING)	0.1	0.1
EVERY 5 YEARS:		
PARTIAL REVEGATATION OF COVER	14.3	14.3
ROUTINE EROSION DAMAGE (REPAIR OF COVER AND DITCH)	0.7	0.7
WATERING NEW VEGETATION	0.8	0.8
PUMP REPLACEMENT: YEAR 30,45	NA	0.5
ENGINEERING FEE (10%)		
CONTINGENCY (15%)		

SOURCE: POPE-REID ASSOCIATES' LINER LOCATION MODEL AND FACILITIES DESIGN TOOL COST MODEL.

tile, run-on control costs, and any needed facility design changes. The post-closure costs were developed in Pope-Reid Associates' Liner Location Model. The largest costs are associated with leachate management. Post closure is assumed to last 5 years at the single-liner facility and 30 years at the triple-liner facility.

Operation and maintenance costs are $13.8 thousand for groundwater monitoring at each facility. Maintenance labor and supply costs are $22.5 thousand for the single-liner facility and $4.6 thousand for the triple-liner facility.

All of these costs are annualized using an 8 percent interest rate. The annualized costs are shown in Table 5-4 for the nine regions. The net present value of future expenditures was calculated for each region prior to annualizing the costs. Table 5-4 presents the costs on a per-barrel basis, which have been calculated by dividing annualized costs by facility capacity. Monitoring will increase disposal costs by less than $0.10 per barrel.

6. Class I and II Injection Wells

Injection wells are frequently used to dispose of liquid wastes. Costs for constructing and operating Class I and Class II wells have been developed for the 9 EPA regions under study by Centec. These costs were developed by Epps and Associates Consulting Engineers, Inc. A detailed analysis of the well, facilities and operating costs can be found in Appendices B, C, and D respectively.

The costs for Class I wells are based on the regulations presented in 40 CFR 146.12 and proposed amendments to 146.61 (Subpart G) due to be promulgated in June 1987. One important

TABLE 5-4

REGION	ANNUALIZED MONITORING COSTS ($1,000 1985) SINGLE 15.0 AC	TRIPLE 15.0 AC	ANNUALIZED PER BARREL MONITORING COSTS SINGLE 15.0 AC	TRIPLE 15.0 AC
NATIONAL	167.0	59.7	$0.07	$0.02
REGION 2	172.2	60.2	$0.07	$0.02
REGION 4	161.6	59.3	$0.07	$0.02
REGION 5	163.1	59.4	$0.07	$0.02
REGION 6	161.1	59.2	$0.07	$0.02
REGION 7	172.3	60.2	$0.07	$0.02
REGION 8	163.1	59.4	$0.07	$0.02
REGION 9	163.2	59.5	$0.07	$0.02
REGION 10	166.9	59.8	$0.07	$0.02
REGION 11	223.9	64.8	$0.09	$0.03

SOURCE: ERG ESTIMATES

interpretation is that a Class I well cannot be converted from an existing well. This interpretation is based on the fact that a number of the well logs require an open wellbore in order to be taken. Additionally, core samples are required that cannot be taken after the well has been cased. Thus Class I wells were assumed to be new wells for this analysis. An important consideration for Class I wells in oil and gas producing regions is the requirement that if any other wells penetrate into the injection zone, these wells must have been properly plugged and abandoned in order to limit waste migration.

Lastly, Class I wells must be tested on a continuous basis during operation in order to ensure that fluids are being properly disposed of in the injection zone. The current regulations do not require post-closure monitoring, however. The cost of post-closure monitoring is not included in the Class I well cost analysis.

The costs for Class II wells are based on 40 CFR 146.22. Unlike Class I wells, regulations are explicitly provided for converting existing wells into Class II wells. In order to facilitate this conversion, the open wellbore core sampling and logging tests discussed above are not required. Costs for developing new wells for disposal were not considered in this analysis. Instead, Class II wells were limited to those which were converted from existing wells. This seems reasonable given the likelihood that existing wells would be available for conversion to injection disposal in oil and gas producing regions. Integrity testing during operation of Class II wells is required. However, the requirements are not as strict as those of the Class I standards. For example, for many of the testing requirements, the well is tested on a weekly or monthly basis, as opposed to the Class I requirement for continuous daily monitoring.

The major cost components of the Class I and Class II wells are described in Table 6-1. Table 6-2 is the investment and operating cost summary for Class I disposal wells. These estimates include the well cost, costs for associated surface facilities, and annual operating costs. In addition to these costs, $50,000 in permitting fees for year 1, and $100,000 in annual liability costs have been included in the analysis. (The liability coverage is for $1 million dollars.)

A schematic diagram of a Class I facility is shown in Figure 1. Based on EPA regulations, the Class I facility is equipped with six 500 bbl holding tanks for initial storage of the disposal liquids. There are six tanks so that separation of incompatible fluids can be maintained. Four 1000 bbl tanks provide storage, settling, oil skimming, and surge volume. In addition, two 5000 bbl tanks are available for storage in the event the well or equipment is being repaired and fluid cannot be injected. All tanks are provided with heating coils to prevent freezing during cold periods. In addition, the meters monitor injection volume and the filters provide a two-stage system of solids removal.

The Class I wells must be constructed below the lowest U.S. drinking water aquifer. As a minimum, schedule 40 stainless steel pipe was considered for injection piping. A chemical system is injected into the well to inhibit corrosion and remove solids and oil. A monitoring fluid (diesel oil) in the annulus is also required by EPA.

Table 6-3 is an investment and operating cost summary for Class II well facilities. The cost of converting an existing well to an injection well was the basis for the Class II cost estimate. Actual facility and operating costs can be as much as 50 percent lower than the estimates provided here for "low budget" operations. In addition to these costs, $100,000 in

TABLE 6-1

COST COMPONENTS OF CLASS I AND CLASS II INJECTION WELLS

ALTERNATIVE	CAPITAL COSTS	O&M COSTS	CLOSURE COSTS	POST-CLOSURE COSTS
Injection (Class II)	o Convert existing well to disposal well - completion rig contract - drilling fluids - cementing - logging and perforating - stimulation - liner and tubing o Site work/building o Holding tanks o Skim tanks o Filters and pumps o Pipelines	o Labor o Chemicals o Electricity o Filters o Disposal of filtrates o Pump maintenance o Pressure tests o Liability costs	o Plug and abandon (NA)	o None
Injection (Class I)	o Drill new well - drilling rig contract - completion rig contract - cementing - logging and perforating - site preparation - casing - liner - tubing o Storage tanks o Annular fluid tank o Filters o Pumps o Pipelines o Site work/buildings o RCRA permit cost (RCRA scenario)	o Same costs as Class II wells with addition of: - tracer survey cement bond log - pipe evaluation - disposal of filtrate in hazardous waste facility	o Plug and abandon (NA)	o None

0285V

TABLE 6-2

CLASS I INJECTION WELL COSTS

REGION	BASIN	WELL	FACILITIES	ANNUAL OPERATING COST ($/YR.)
Region 2	Appalachian	$ 855,000	$1,251,000	$ 628,000
Region 4	Mississippi	666,000	1,351,000	574,000
Region 4	Arkla	588,000	1,039,000	436,000
Region 5	Michigan	1,030,000	1,092,000	517,000
Region 5	Illinois	1,156,000	962,000	442,000
Region 6	Williston	1,028,000	1,201,000	462,000
Region 6	Hugoton	585,000	1,010,000	425,000
Region 7	Permian	897,000	1,147,000	476,000
Region 7	Anadarko	5,325,000	1,314,000	516,000
Region 7	Gulf Coast	939,000	1,059,000	476,000
Region 8	Powder River	942,000	1,184,000	494,000
Region 9	San Juan	1,029,000	1,214,000	516,000
Region 9	Denver Julesburg	911,000	1,189,000	539,000
Region 10	San Joaquin	652,000	1,311,000	503,000
Region 11	North Slope	3,237,000	5,257,000	1,447,000

Source: EPPS & Associates Consulting Engineers, Inc., 1987.

0244V

FIGURE 1

CLASS I FACILITIES SCHEMATIC

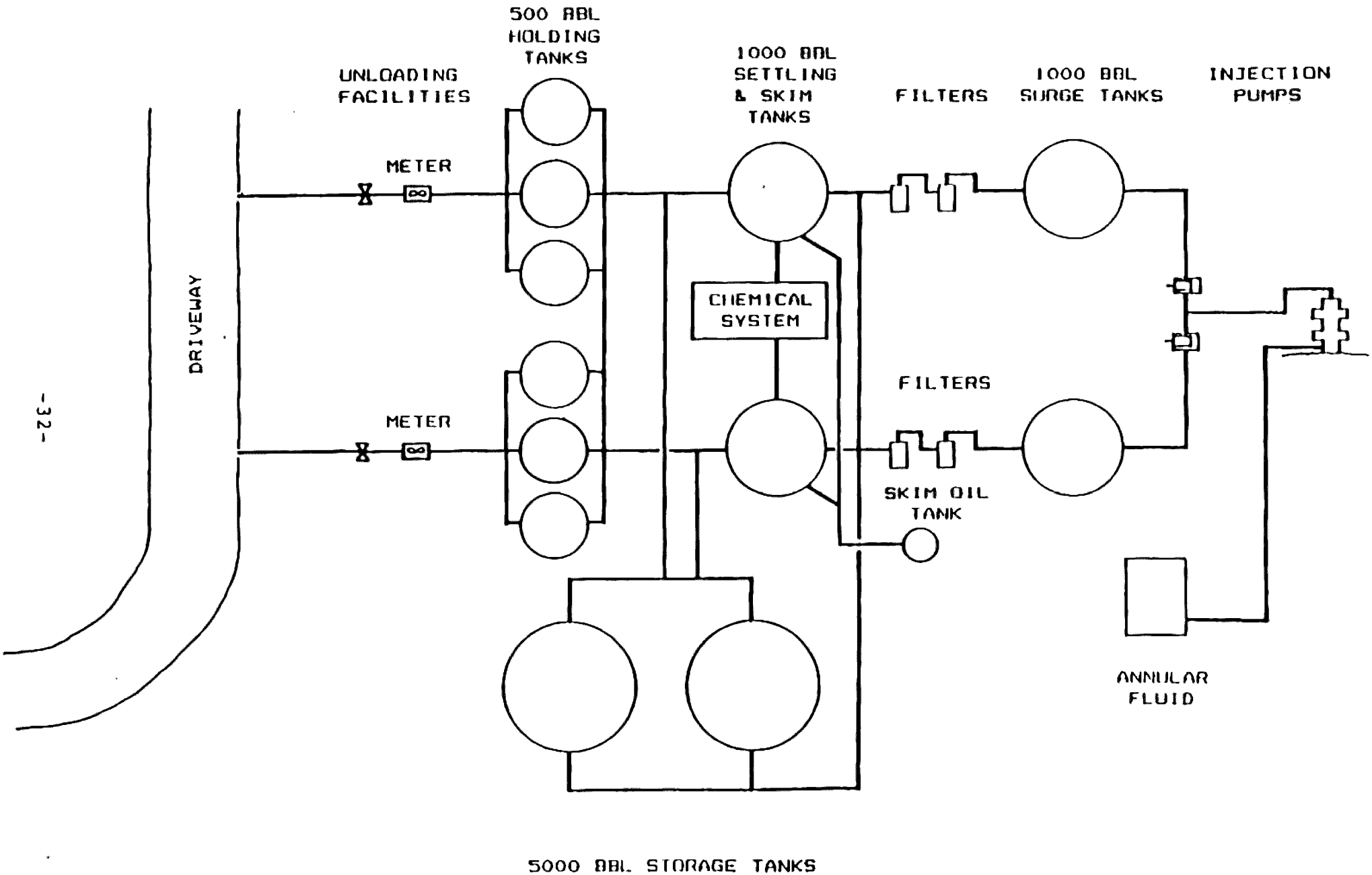

TABLE 6-3

CLASS II INJECTION WELL COSTS

REGION	BASIN	WELL	FACILITIES	ANNUAL OPERATING COST ($/YR.)
Region 2	Appalachian	$ 207,000	$ 940,000	$ 480,000
Region 4	Mississippi	177,000	1,015,000	427,000
Region 4	Arkla	155,000	794,000	288,000
Region 5	Michigan	230,000	846,000	370,000
Region 5	Illinois	278,000	735,000	295,000
Region 6	Williston	252,000	934,000	314,000
Region 6	Hugoton	187,000	772,000	277,000
Region 7	Permian	207,000	891,000	328,000
Region 7	Anadarko	446,000	987,000	369,000
Region 7	Gulf Coast	231,000	823,000	328,000
Region 8	Powder River	240,000	893,000	346,000
Region 9	San Juan	242,000	911,000	369,000
Region 9	Denver Julesburg	233,000	843,000	391,000
Region 10	San Joaquin	147,000	1,018,000	355,000
Region 11	North Slope	992,000	5,257,000	884,000

Source: EPPS & Associates Consulting Engineers, Inc., 1987.

0244V

annual liability costs have been included in the analysis. Figure 2 provides a schematic representation of a Class II facility.

Tables 6-4 and 6-5 are the estimated costs which a commercial operation would charge for fluid disposal. Table 6-4 presents costs by basins. These costs are based on an annualized operating life of 20 years and an interest rate of 8 percent. Table 6-5 presents average per-barrel costs for each region. These costs were developed by averaging the costs in Table 6-4 by region.

It is interesting to compare the costs generated by Epps and Associates to the prices charged by Class II facilities that are currently operating. The charges by existing facilities vary from $0.25/bbl to $1.25/bbl for injection well disposal costs. The lower rates occur in "competitive" markets with many commercial disposal facilities. The higher rates were a function of charging as much as the operator could. For example, in Oklahoma where relatively high rates prevail, there was only one disposal facility serving a large area. Generally, commercial oilfield injection facilities were charging $0.25/bbl to $0.60/bbl. Thus, the above cost estimates for Class II wells are in the range of prices charged by existing facilities.

7. Solidification

Solidification processes (also known as stabilization or fixation) chemically or physically bind a liquid, sludge, or semisolid waste to reduce or eliminate leaching of constituents such as metals from the waste. To date, solidification has seen limited use for treatment and disposal of oilfield wastes, although it is becoming more common as state disposal

FIGURE 2

CLASS II FACILITIES SCHEMATIC

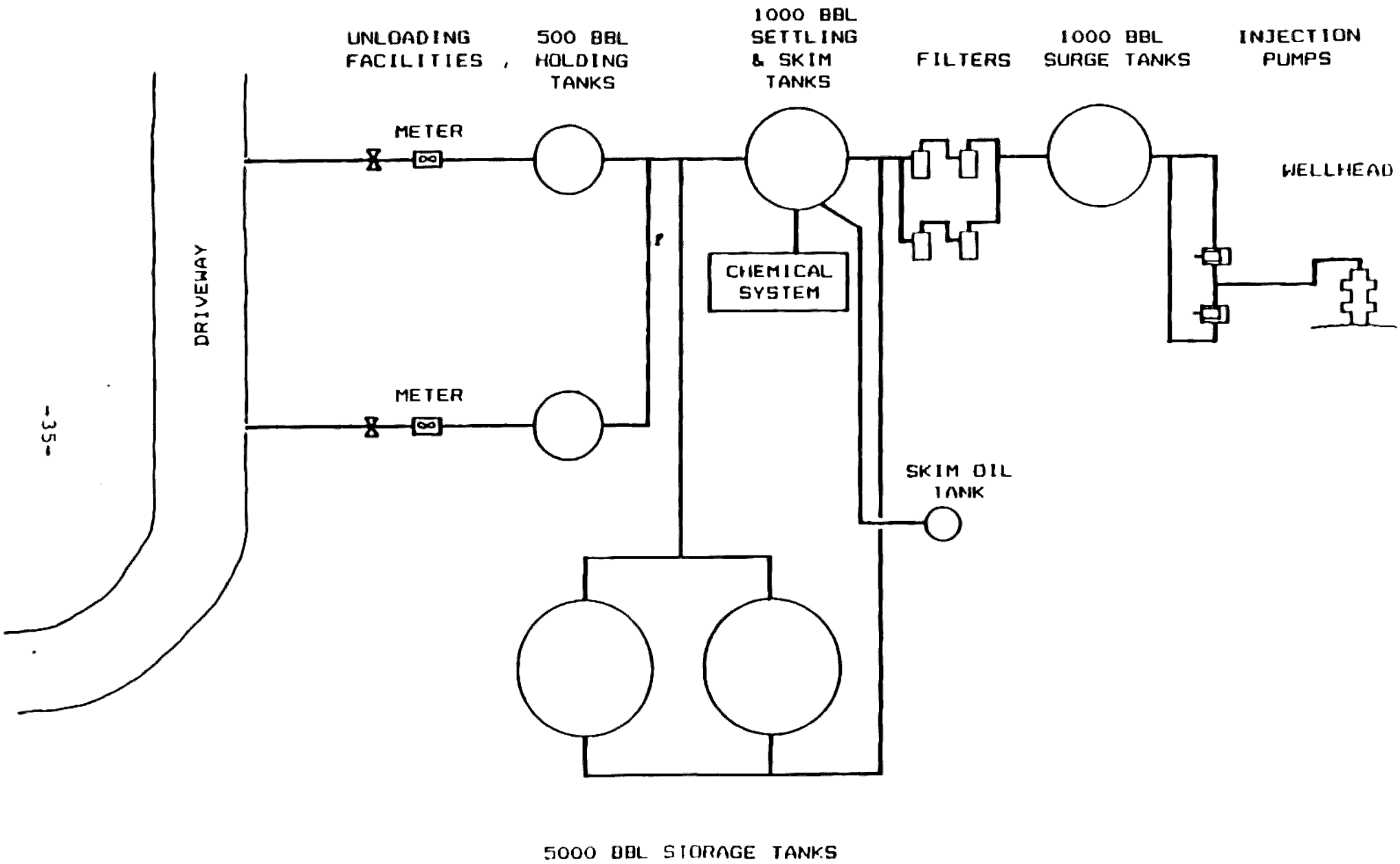

TABLE 6-4

ANNUALIZED PER BARREL INJECTION WELL COSTS BY BASIN

		INJECTION RATE 5,000 BPD	
REGION	BASIN	CLASS I ($/BBL)	CLASS II ($/BBL)
Region 2	Appalachian	0.52	0.38
Region 4	Mississippi	0.48	0.36
Region 4	Arkla	0.38	0.27
Region 5	Michigan	0.46	0.32
Region 5	Illinois	0.42	0.28
Region 6	Williston	0.43	0.30
Region 6	Hugoton	0.38	0.26
Region 7	Permian	0.43	0.30
Region 7	Anadarko	0.71	0.34
Region 7	Gulf Coast	0.43	0.30
Region 8	Powder River	0.44	0.31
Region 9	San Juan	0.46	0.32
Region 9	Denver Julesburg	0.47	0.33
Region 10	San Joaquin	0.44	0.32
Region 11	North Slope	1.32	0.89

Source: ERG estimates.

0244V

TABLE 6-5

ANNUALIZED PER-BARREL INJECTION
WELL COSTS BY REGION

	INJECTION RATE 5,000 BPD	
REGION	CLASS I ($/BBL)	CLASS II ($/BBL)
Region 2	0.52	0.38
Region 4	0.43	0.32
Region 5	0.44	0.30
Region 6	0.41	0.28
Region 7	0.52	0.31
Region 8	0.44	0.31
Region 9	0.47	0.33
Region 10	0.44	0.32
Region 11	1.32	0.89

Source: ERG estimates.

0244V

regulations tighten. The major reason that solidification has not been used more frequently is that the costs for solidification are higher than those for onsite pit dewatering and burial. Thus solidification has typically been used only in those cases where permits or regulations do not allow the usual disposal practices.

In most solidification processes, reagents such as flyash, kiln dust, portland cement, asphalt, polyethylene, water soluble silicates, and/or lime are combined with the waste. In a matter of several hours to a day, the mixture begins to "set up" or gel, and once cured, becomes a clay-like, soil-like or solid substance. In many cases, the waste is then buried onsite; however, the solidified waste may even be acceptable for use as sanitary landfill cover, building material, or general purpose fill. Waste determined to be hazardous may be buried onsite (by creating an approved disposal pit meeting RCRA requirements) or it may be transported offsite to a secure landfill.

Not all solidification processes are suitable for stabilizing (i.e., preventing leaching of) waste constituents from drilling wastes. Additions of soil or sawdust often do little to contain waste constituents, although they make liquid wastes easier to handle. These types of solidification processes are not considered here. Flyash and kiln dust, depending on the nature of the material, can prevent some leaching, but other pretreatments or reagents may be required to bind salts, organics or some metals. These materials, with other additives, are frequently used to solidify drilling wastes at a relatively low cost (flyash and kiln dust cost $0 to $40 per ton [Cullinane et al., 1986]). Portland cements and water soluble silicates are also sometimes used to solidify drilling wastes. These materials are more expensive (up to $65/ton for cement and $200/ton for silicates, which are used

in small quantities [Cullinane et al., 1986]); however, they tend to bind waste constituents better than flyash and kiln dust alone. Asphalt and polyethylene are used to encapsulate waste and often provide the highest level of binding. Because of their high cost, these latter methods are used for only the most acutely hazardous wastes or wastes with the most highly mobile constituents.

Vendors supplying solidification services were contacted to determine their schedule of charges, the processes employed, and their applicability. In addition, various published information was also used to determine costs. The information gathered is provided in Table 7-1. The single most critical variable in determining costs is the solidification agent. Processes using flyash, kiln dust, cement, and/or water soluble silicates have lower costs than those using polyethylene or asphalt.

Most of the processes control heavy metals, organics (material with 40-50 percent organics content), and chlorides (material with up to 30,000 ppm chloride concentration). The processes vary, however, in a number of respects.

- Several different modes of operation are used. Most vendors move their equipment to the site to perform solidifcation. VenVirotek, on the other hand, processes wastes brought to its site.

- Some systems use fork-like injectors attached to backhoes to inject and mix reagents with the waste. Others pump wastes into portable tanks, mix reagents with waste, and return the setting material to the original pit or to an additional pit constructed for final disposal.

- Some vendors bury the wastes onsite; while other syst are designed for the solidified wastes to be transpor for offsite disposal. The costs shown in Table 7-1 not include the cost of offsite transport and dispos although some of the vendor costs, where noted, inc the cost of onsite pit burial (a minor cost element since heavy construction equipment is already onsi apply the solidification reagents).

TABLE 7-1

COSTS OF SOLIDIFICATION[a]

SOURCE	WASTE TYPE	$/BBL	COMMENT
Enreco	Drilling muds	Approx. $5/bbl	Range from $3-$10/ bbl.
Envirite	Drilling muds	Approx. $4-8/bbl	$10/bbl was specified as cost for solidifying waste in Alaska.
Chemfix/ VenVirotek	Hazardous waste/ drilling muds	$5-$12/ bbl	Chemfix's subsidiary Venvirotek operates a stationary facility accepting drilling waste at $5.45/bbl. Chemfix works with hazardous waste/ drilling fluids at $5-$12/ bbl.
Hazcon	Heavy metals/ contaminated soils and sludges.	$16/bbl	This firm is a startup. No work has yet begun.
Velsicol Chem.	Hazardous waste sludges with up to 45% organics	$6-$20/ bbl	
IMCO Survey	Drilling fluids	$3-$4.50/ bbl	
Engineering Estimates	Waste liquids and light sludges	$7-$9/ bbl	Low figure is in situ treatment with backhoe; high figures is in situ treatment with portable tank. These estimates were based on using mid-price reagents. Less

TABLE 7-1 (continued)

SOURCE	WASTE TYPE	$/BBL	COMMENT
			expensive reagents could possibly be used for drilling fluids. If a self-cementing fly ash were used, the cost could be as low as $4.50/bbl.
Engineering Estimates	Oil-based and water-based mud	$7/bbl	Includes cost of clay cap and revegetation.

[a]Enreco and Envirite costs include on-site burial of the pit. Chemfix/VenVirotek, Hazcon, and Velsico costs do not include disposal costs. The Imco Survey does not specify whether on-site burial is included in the cost cited.

Sources: Personal communication between Anne Jones, ERG, and Steven Erlandson, Enreco, Inc., December 22, 1986; Anne Jones, ERG, and William Webster, Envirite, January 7, 1987; Anne Jones, ERG, and Laura Tesar, Venvirotek, December 31, 1986.

Camp Dresser & McKee, Inc., 1986. Superfund Treatment Technologies: A Vendor Inventory, EPA 540/2-8/004.

Paul M. Hanson and Frederick V. Jones, 1986. Mud Disposal, an Industry Pespective. In: Drilling, May 1986.

Cullinane, M. John, Larry W. Jones, and Phillip G. Malone. 1986. Handbook for Stabilization/ Solidification of Hazardous Waste. EPA 540/2-86/001. June.

North America Environmental Service. 1985. Closure Plan for the Big Diamond Trucking Service, Inc. Drilling Mud Disposal Pit Near Sweet Lake, LA.

0153V

The costs of solidifying drilling wastes tend on average to be lower than the costs of solidifying unspecified hazardous wastes. This is due to the fact that most of the cost of a solidification operation is associated with reagents (up 40 to 65 percent of the total cost [Cullinane et al., 1986]) and the usual constituents of drilling fluids often reduce the amount of reagents required to solidify waste. For example, drilling fluids typically contain large amounts of bentonite and other clays. These same types of clays are often added to solidifying agents to reduce the amount of agents required for the solidification process. Clays improve the binding ability of the solidified waste so that special additives may not be required. In addition to clays, drilling fluids also tend to be quite alkaline and often contain lime, which is an additive frequently used to enhance solidifying and binding qualities of the reagents. A low pH waste requires large amounts of lime to achieve a stable solidified waste, whereas most drilling fluids require little or no lime to achieve equivalent solidification. When the solidified waste has a pH of between 9.5 to 11 (fairly common values for drilling waste), metals such as zinc, copper, lead, and cadmium are least likely to leach (Cullinane et al., 1986).

As Table 7-1 shows, the costs of solidification range from $3 to $20 per barrel of waste. The higher costs tend to be those associated with firms specifying costs for solidifying hazardous wastes. Lower costs are quoted by those firms who specified costs for solidifying drilling wastes. Most cost quotes for solidifying drilling wastes ranged between $3 and $8 per barrel of waste. A cost of about $10/bbl was quoted by one source for waste solidified in Alaska, due to costs of transporting heavy equipment and reagents to the area. Since two of the firms quoting costs specifically for drilling fluids operate throughout most of the country, and their costs vary

only slightly with region (both firms acquire construction equipment and reagents locally so that transporation costs are kept reasonable), it is probable that most oil and gas operators desiring solidification of their wastes can be provided with services in the $4 to $8/bbl range, with the exception of Alaska.

Several factors may raise the cost of solidifying drilling wastes. One of the most important of these is whether the waste contains a high level of organics, particularly oil and grease. Oil and grease can substantially reduce the bonding ability of flyash reagents and cements, requiring additional quantities of reagent or special pretreatments to improve the bonding ability of the reagent. At least one vendor, however, did not differentiate between the cost of solidifying an oil-based mud and that of solidifying a water-based mud (both were quoted at about $7/bbl, inclusive of clay cap and revegetation). High levels of chlorides may also interfere with the efficacy of the reagents, and special additives may be required to fully control the leaching of salts from wastes. At least one firm (Envirite), has shown its process to be capable of controlling chlorides in a 30,000 ppm chloride mud (Calloway, 1986).

Solidification would be expected to be used for Level 3 wastes, either alone or in combination with offsite impoundment disposal. In this latter disposal option, solidification was included as part of the cost of facility closure. This is also the case under the RCRA Subtitle C scenario for the surface impoundment disposal option. Thus the type of solidification processes outlined here are applicable only to Level 3 wastes disposed of onsite in lieu of disposal in a lined pit.

8. Incineration

Incineration is typically performed on hazardous wastes containing high levels of organics. Such waste streams include PCB-contaminated soils, solvents, organic sludges and organic-contaminated soils. Since incineration is primarily used to eliminate or reduce hazardous organic constituents in the wastes, and many incineration operations have a limited effect on reducing metals in the waste, this alternative may not be useful in cases where wastes are classified as hazardous because of heavy metal content. Therefore, the type of oil and gas waste for which incineration is most suitable is likely to be waste with a relatively high organic content. This waste would include oil-based muds, portions of water-based muds in which diesel oil has beeen used as a lubricant, or produced water tank bottoms. The high ash content and/or low combustibility of many water-based muds make the use of this alternative less likely for this type of waste.

Very few firms currently incinerate drilling fluids. Since those which do are not required to handle the ash and scrubber waste as potentially hazardous following incineration, their current costs do not reflect the costs of incinerating a hazardous waste. Because of its high cost, incineration would only be considered as a primary disposal option under a RCRA Subtitle C Scenario. Therefore, costs for incincerating hazardous wastes are considered here.

In a recent report of hazardous waste disposal costs, EPA surveyed 18 major firms providing a number of different hazardous waste disposal services. Incineration was a service offered by five of the firms surveyed. Those which handle sludges and solids reported 1985 costs for incineration as $115.50/bbl to $199.50/bbl, which includes the cost of ash and scrubber sludge disposal. These costs do not include the cost

of transporting the waste to the incineration facility (see Section Twelve). Thus, actual incineration costs for oil and gas operators would be higher.

The per-barrel cost for drilling waste incineration is far higher than those of RCRA triple-liner facilities with site management practices. Thus, it is probable that incineration will not be a major disposal option under any of the waste management scenarios. These issues will be considered in more detail in the impact assessment report.

9. Landfarming

Landfarming is defined here to be a commercial operation in which numerous applications of drilling wastes are applied to soils. The wastes and soils are well mixed to a depth of 2-3 feet. Biodegradation of organics takes place and some dilution of metals and salts occurs. Currently, the landfarming of drilling muds is most actively practiced in Louisiana.

The costs of commercially landfarming oil and gas wastes have been estimated using a model developed by Pope-Reid Associates. The major cost elements in this model are shown in Table 9-1. This option is applicable under the Intermediate Scenario (Level 2 and 3 wastes) and under the RCRA Subtitle C Scenario for hazardous waste. Thus, two landfarming cost estimates were generated, one representing an Intermediate Scenario in which oil and gas waste is not considered hazardous, and one in which certain portions of oil and gas waste are considered hazardous. The Intermediate Scenario uses the assumptions built into the model corresponding to a pre-interim status facility. The RCRA Scenario uses the assumptions associated with a facility complying with full Part 264 requirements. The differences between these two facility

TABLE 9-1

LANDFARMING COST COMPONENTS

ALTERNATIVE	CAPITAL COSTS	O&M COSTS	CLOSURE COSTS	POST-CLOSURE COSTS
Commerical Landfarming	o Land cost o Land clearing cost o Building cost o Lysimeter cost (RCRA scenario) o Cluster wells (RCRA scenario) o Wind dispersal control (RCRA scenario) o Storage tanks o Engineering and inspection o Contingency o Retention pond (RCRA scenario) o Berms (RCRA scenario)	o Labor o Groundwater monitoring o Soil pore cost o Maintenance o Utilities o Insurance Taxes and G&A	o Revegetation	o Land authority and property deed cost o Groundwater monitoring cost o Soil core cost o Erosion control cost o Vegetative cover cost o Engineering and inspection cost o Contingency

0287V

types are presented in Table 9-2. As the table shows, the pre-ISS scenario (which has been chosen to model the Intermediate Scenario) does not have the elaborate site management, closure, and post-closure requirements of landfarming operations handling RCRA wastes. However, for the Intermediate Scenario the costs of constructing and operating groundwater monitoring wells for the one year of facility operation and for 5 years after facility closure were included.

Two 35-acre model facilities in each of eight regions were costed - one representing the Intermediate Scenario, the other the full RCRA Scenario. Facility costs were estimated for Regions 2, 4, 5, 6, 7, 8, 9, and 10. Region 11, Alaska, was assumed to be unsuitable for landfarming operations due to climate and soil conditions. For each applicable region, appropriate precipitation rates and soil types were input to the Pope-Reid Model. Since rainfall rates vary widely within some of the regions, an approximate midpoint figure was derived. Soil types were deemed clayey in Eastern regions (Regions 2, 4, and 5) and loamy/silty clays in Western regions. Since a major portion of the waste stream is composed of clays, even sandier areas would have clays incorporated into the soils via the application of the wastes.

A model drilling waste stream was devised to characterize some of the important constituents of the stream, such as metals. The Pope-Reid Model currently accepts inputs for lead, chromium, zinc, cadmium, copper, nickel, chlorides, barium, total suspended solids, and specific gravity. Of these, lead and zinc, chlorides, barium, total suspended solids, and specific gravity are the most relevant to drilling fluid disposal. Barium and chlorides, although not specified under RCRA for soil loading, will be important limiting factors for drilling fluid applications because of their high

TABLE 9-2

LANDFARMING COST COMPONENTS BY WASTE MANAGEMENT SCENARIO

COST COMPONENT	INTER-MEDIATE SCENARIO	PART I264
Direct Capital		
Land purchase	X	X
Land clearing	X	X
Building	X	X
Berm		X
Waste application equipment	X	X
Lysimeters		X
Groundwater monitoring wells	X	X
Wind dispersal control		X
Drainage tile system	X	X
Retention pond for runoff control		X
Waste storage area		
Tank for liquids	X	X
Waste pile in maintenance building for solids		X
Indirect Capital		
Regulatory activities (i.e., treatment demonstration, background sampling, and plans)		X
Fees	X	X
Direct O&M		
Labor		
Engineer/supervisor		X
Technician		X
Clerical		X
Equipment operators	X	X
Maintenance supplies	X	X
Utilities	X	X
Groundwater monitoring	X	X
Soil pore monitoring		X
Soil core monitoring		X

TABLE 9-2 (continued)

COST COMPONENT	INTER-MEDIATE SCENARIO	PART I264
Indirect O&M		
Insurance, taxes, and G&A	X	X
Closure		
Seed active area	X	
Remove contaminated soils		X
Revegetation		X
Retention pond closure		X
Tank closure		X
Waste pile closure		X
Equipment decontamination		X
Groundwater monitoring	X	X
Soil pore monitoring		X
Soil core monitoring		X
Certification of closure		X
Post-Closure (30 years)		
Notice to land authority		X
Notation on property deed		X
Groundwater monitoring	X	X
Soil core monitoring		X
Erosion control by recontouring portions of cover annually		X
Maintain vegetative cover		
Mow		X
Fertilize		X
Partial revegetation of cover		X
Inspect cover		X

X = Denotes cost incurred for that scenario.

0163V

concentrations and the attendant risks of soil and groundwater contamination. Pope-Reid Associates modified the program to accommodate loading factor limits for barium and chlorides for commercial landfarms. The drilling mud composition that was programmed into the model is shown in Table 9-3. The metal factors for barium, chromium, zinc and lead are based on a recent study of metal concentrations in Louisiana and Mississippi drilling mud pits (Freeman & Deuel, 1986). These assumptions will be modified in future work based on the recently-published CENTEC data.

Table 9-4 summarizes the output from the Pope-Reid Model. (The model output is shown in Appendix E.) As can be seen, the regional differences play a relatively minor role in the costs of building, maintaining, and closing a commercial landfarming facility. Large cost differences are seen, however, between the Intermediate and RCRA Scenario facilities. All capital and closure costs were annualized and divided by facility capacity estimates to establish per-barrel costs (Table 9-5). These costs are relatively high in comparison to other waste management pratices due to the limitations that the barium imposed upon landspreading volumes. In Regions 2, 4, and 5, waste application was limited to 17,071 MT (metric tons) per year. In the other regions waste was applied at a rate of 12,803 MT per year.

Transportation costs also need to be factored into the analysis. The average distance from a drilling or production site to a commercial landfarm could be as much as 500 miles, since commercial landfarms may continue to be less common than many of the other disposal options. Currently, few states allow commercial landfarming of oil and gas wastes and the number of permitted RCRA landfarms is declining (Strosnik, 1987; Sherman, 1987). Transportation costs are considered in Section Twelve.

TABLE 9-3

LANDFARMING MODEL'S DRILLING MUD WASTE STREAM

METAL	PPM
Lead	250
Chromium	100
Zinc	250
Copper	250
Nickel	100
Cadmium	--
Barium	1,000
Chloride	2,000
Specific Gravity	1.2
% Water	87
% Other Inorganics (including solids)	10
% Organics	3

Source: Freeman and Deuel, 1986, and Freeman, 1987.

0175V

TABLE 9-4

COSTS OF CONSTRUCTING, MAINTAINING, AND CLOSING A COMMERCIAL LANDFARM HANDLING DRILLING WASTES

	INTERMEDIATE SCENARIO				FULL RCRA SCENARIO			
REGION	CAPITAL COSTS (TOTAL)	O&M COSTS (ANNUAL)	CLOSURE COSTS (TOTAL)	POST-CLOSURE COSTS (ANNUAL)	CAPITAL COSTS (TOTAL)	O&M COSTS (ANNUAL)	CLOSURE COSTS (TOTAL)	POST-CLOSURE COSTS (ANNUAL)
2	$1,057,075	$107,183	$14,538	0	$1,927,752	$203,262	$432,964	$710,599
4	$1,002,380	$138,758	$14,538	0	$2,074,444	$251,596	$574,118	$726,706
5	$1,057,075	$107,183	$14,538	0	$1,950,521	$204,628	$449,101	$712,276
6	$1,026,345	$107,695	$14,538	0	$1,983,564	$208,967	$492,920	$717,448
7	$988,292	$135,557	$14,538	0	$1,881,736	$237,677	$444,574	$712,276
8	$1,026,345	$107,695	$14,538	0	$1,848,429	$200,858	$396,937	$706,448
9	$1,002,380	$119,397	$14,538	0	$1,824,464	$216,080	$395,127	$706,448
10	$988,292	$135,557	$14,538	0	$1,858,970	$236,311	$428,438	$710,599

Source: Output from Pope-Reid Associates' Land Treatment Computer Cost Model, 1987.

0173V

TABLE 9-5

ANNUALIZED LANDFARMING COSTS BY REGION
[$ 1985]

REGION	PRE ISS STANDARD	RCRA STANDARD
REGION 2	$1,240,178	$2,838,778
REGION 4	$1,132,898	$2,985,524
REGION 5	$1,165,483	$2,717,803
REGION 6	$1,120,410	$2,758,139
REGION 7	$1,198,100	$2,838,568
REGION 8	$1,138,187	$2,589,398
REGION 9	$1,125,871	$2,582,032
REGION 10	$1,158,538	$2,707,278

ANNUALIZED PER BARREL LANDFARMING COSTS BY REGION
[$ 1985]

REGION	PRE ISS STANDARD	RCRA STANDARD
REGION 2	$13.21	$30.23
REGION 4	$12.08	$31.58
REGION 5	$12.41	$28.94
REGION 6	$15.91	$39.14
REGION 7	$17.01	$40.31
REGION 8	$16.14	$36.49
REGION 9	$15.99	$36.38
REGION 10	$16.42	$38.45

SOURCE: ERG ESTIMATES.

10. Substitution of Material Inputs

Both the Intermediate and the RCRA Subtitle C Scenarios may restrict and/or increase the cost of disposal of certain wastes based on the concentration of individual contaminants or on the toxicity of the whole waste. It might be possible to reduce the cost of waste disposal by substituting less toxic constituents into the drilling muds, thereby reducing the level of contaminants in the waste. The substitution of less toxic components might, however, result in an increase in cost or deterioration of performance of the drilling mud.

Drilling muds are comprised of a base fluid, which acts as a continuous phase to suspend the other materials and a variety of additives. The base fluid is commonly water, but under certain conditions, diesel oil is used as a base fluid. The additives of drilling mud systems are grouped into functional categories: weighting agents, viscosifiers, fluid loss additives, commodities, dispersants, and specialty fluids. In most drilling fluids, the base fluid is the largest constituent by weight and volume. The percentage of other oilfield chemicals sold, by dry weight, is shown in Table 10-1.

For both the base fluid and the additives, the selected components may vary in their toxicity. For example, an oil-based mud may contain diesel oil, which is highly toxic, as the base fluid, or it may contain mineral oil, a less toxic substitute. Similarly, the barite used as a weighting agent in the mud may vary considerably in the level of heavy metal contaminants present in the ore.

If operators are concerned with the toxicity of their drilling waste, they may select less toxic components for their mud system. The operators must weigh a reduction in disposal cost against a potential deterioration in mud performance or an

TABLE 10-1

THE MAJOR CONSTITUENTS OF DRILLING FLUIDS

	% OF TOTAL BY DRY WEIGHT
Weighting Agents	
Barite	64.18
Calcium Carbonate	0.43
	64.61
Viscosifiers	
Bentonite	25.68
Organophilic Clay	0.11
Hydroxyethylcellulose	0.05
Attapulgite	2.40
Xanthan Gum	0.008
Asphalt	0.23
Asbestos	0.07
Polyacrylamides	0.005
Guar Gum	0.005
	28.57
Fluid Loss Additives	
Carboxymethyl Cellulose	0.13
Starch	0.43
Polyacrylates	0.06
	0.62
Commodities	
Sodium Hydroxide	1.60
Calcium Chloride	0.50
Sodium Carbonate	0.74
Sodium Chloride	0.42
Potassium Chloride	0.07
	3.34
Dispersants	
Lignosulfonates	1.48
Sodium Hexametaphosphate	0.07
Lignite	0.47
Sodium Acid Pyrophosphate	0.04
Tannin	0.03
	2.08

TABLE 10-1 (Continued)

	% OF TOTAL BY DRY WEIGHT
Specialties	
Emulsifiers	0.08
(ethoxylated phenols)	
(ethoxylated nonylphenols)	
Sodium Bichromate	0.05
Corrosion Inhibitors	0.01
(fatty amines)	
(imidazolines)	
(actetylenic acids)	
Biocides	0.01
(Paraformaldehyde)	
(Dowacide G-pentachloro-phenol)	
Defoamers	0.01
(aluminum stearate)	
(sulfonated castor oil)	
(alcohols)	
(silicones)	
Zinc Carbonate	0.004
	1.73
All Other	
(lost circulation material)	0.60
(- mica flakes)	
(- sugar cane fiber)	
(- ground paper)	
(lubricants and coolants)	
(- graphite)	
(- diesel)	
	100.0

Source: C. H. Kline and Co., 1980.

Note: This listing of chemicals does not specifically list certain chemicals used in drilling such as gypsum (calcium) sulfate and calcium hydroxide or calcium oxide although these may appear in the "all other" category.

0280V

increase in mud costs. The potential to reduce toxicity through substitution of additives is considered below for three drilling fluid components: the base fluid, weighting agents, and biocides. These component agents were selected as examples to be used in this report because they exhibit the following features:

1. They are all major functional components of mud systems.
2. For all three categories, a toxic and a less toxic component are widely available.
3. All have been considered in previous EPA research as components for which less toxic substitutes are available.

After the results of the CENTEC sampling study have been fully analyzed, other components may be considered in future research.

Base Fluid

Most wells are drilled with water as the base fluid, so toxicity is not an issue. However, oil-based muds are used under extremely deep or high temperature conditions, for holes with hydratable shales, holes requiring directional drilling, and other specialized circumstances (Maurice Jones, 1986). In most cases, diesel oil is used as a base fluid when oil-based muds are needed. Mineral oil is an available, relatively non-toxic substitute for diesel oil.

The cost of substituting mineral oil for diesel oil depends on the quantity of base fluid used in the mud system and on the cost differential between the two fluids. Mineral oil currently costs approximately $1.15/gallon, while diesel oil sells for $0.70/gallon (Tom Siegmond, 1987). Thus, there is a $0.45 increase in cost for every gallon ($18.90/barrel) of diesel oil substituted.

The amount of oil used in the mud system varies by depth of well, region, and downhole conditions. Thus, each well using a diesel-based system will be characterized by a different volume of diesel oil. One example of a diesel-based mud system, based on discussions with mud suppliers is shown in Table 10-2. In this example, the amount of diesel oil required in the drilling program is 2,250 barrels and the cost of diesel substitution is $42,525. Since oil-based muds are recycled, these cost . overstate the cost of mineral oil substitution on a per-well basis.

Weighting Agent

The second most significant constituent of the drilling mud, after the base fluid, is the weighting agent. These materials are used to control downhole pressures during drilling. The primary weighting agent is barite or barium sulfate. Commercial barites may be contaminated by heavy metals and other impurities, with impurities ranging from 0 to 8 percent. High-grade barites may have impurity levels as low as 1 mg/kg of metals or less.

Commercial barite is sold in bulk, with no price distinction based on the level of heavy metals or other impurities. Thus, it is difficult to assess the cost of shifting from impure barite to a high quality substitute. Current barite costs are $63 per ton. A recent API study (API, 1986) however, estimated that a requirement that barite supplies contain less than 1 mg/kg of metal impurities would reduce world supplies by 41 percent and increase prices 40 to 60 percent. A restriction that barite supplies contain less than 5 mg/kg of cadmium and 3 mg/kg of mercury would reduce supplies by 14 percent and increase price by 10 to 25 percent.

TABLE 10-2

COST OF MINERAL FOR DIESEL OIL
SUBSTITUTION FOR A 15,000 FOOT WELL

Assumptions		
Well Depth	:	15,000 feet
Volume of Mud System	:	2,500 barrels
Percent Diesel Oil	:	30
Drilling Rate	:	200 feet per day
Diesel Replacement Rate	:	20 barrels/day
Duration of Drilling	:	75 days
Calculations		
Initial Diesel Volume	:	2,500 barrels x .30 = 750 barrels
Diesel Replacement Volume	:	20 barrels day x 75 days = 500 barrels
Total Oil Requirement:	:	750 barrels + 1,500 barrels = 2,250 barrels
Net Cost of Replacing Diesel with Mineral Oil	=	2,250 barrels x 1.89 = $42,525

0289V

Using the API study as a basis, Table 10-3 assesses the cost increases for typical wells based on shifting the market to high quality barite. National average costs per well range from $1,300 to $4,500 (5 mg/kg cadmium, 3 mg/kg of mercury) to a maximum of $5,700 (1 mg/kg metals limitation). It should be noted that barite costs, as a percentage of total mud costs, is an increasing function of well depth. Therefore, a change in barite cost will have the greatest impact on deeper wells.

Biocides

Biocides represent a small component of the entire mud system. However, these substances are highly toxic. In 1979, 29 percent of the market was held by Dowicide G (containing pentachlorophenol which biodegrades very slowly); while 57 percent of the market was captured by paraformaldehyde (a much more rapidly biodegradable substitute). Since that time, however, environmental permitting restrictions have limited the use of pentachlorophenol-based biocides. Most manufacturers have discontinued the sale biocides containing pentachlorophenol in the United States. Thus, where biocides are currently used, the vast majority of operators are currently already using paraformaldehyde products. Therefore, further biocide substitution to reduce the hazardous characteristics of drilling muds and associated wastes is not a viable option for most drilling programs.

11. Waste Volume Reduction

Waste volume reduction includes a wide range of technologies for recycling muds during drilling and for dewatering wastes prior to disposal. Waste volume reduction is

TABLE 10-3

BARITE COSTS FOR TYPICAL WELLS IN EACH REGION

REGION	AVERAGE WELL DEPTH[a] (FEET)	DRILLING MUD[b] (BBLS)	BARITE[c] (TONS)	BARITE COSTS (DOLLARS)		
				CURRENT COSTS[d]	3 & 5 mg/kg SCENARIO[e]	1 mg/kg SCENARIO[f]
Region 2	3,053	184	20.9	$1,317	$1,554	$1,976
Region 4	5,830	352	39.9	2,514	2,967	3,771
Region 5	2,811	170	19.3	1,216	1,435	1,824
Region 6	4,163	251	28.5	1,796	2,119	2,694
Region 7	5,100	308	34.9	2,199	2,595	3,299
Region 8	6,603	398	45.1	2,841	3,352	4,262
Region 9	6,308	380	43.1	2,715	3,204	4,073
Region 10	2,555	154	17.5	1,103	1,302	1,655
Region 11	8,777	529	60.0	3,780	4,460	5,670

[a]Based on the 1985 Joint Association Survey on Drilling Costs, American Petroleum Institute, 1986.

[b]Assumes a 7-7/8" drill bit size and 0.0603 bbl/ft of dry drilling mud.

[c]Assumes 42 gal/bbl, 12 lb/gal, 45 percent of the mud weight is barite, and 2,000 lbs/ton.

[d]Assumes barite costs $63/ton.

[e]With cadmium and mercury metal limitations of 3 and 5 mg/kg, respectively, barite costs will rise approximately 18 percent.

[f]With metal limitations of 1 mg/kg, barite costs will rise approximately 50 percent.

0203V

generally used to reduce costs. However, in environmentally sensitive areas, the use of waste volume reduction techniques, such as "closed loop" systems, may be mandated by regulatory agencies to minimize potential environmental damage.

The most popular way of reducing waste volumes during drilling is to use traditional solids control equipment such as shale shakers, desilters, desanders, and degassers. Many of these solids control devices are standard drilling equipment. The mud can be recycled more efficiently if additional equipment like centrifuges is also employed. Standard costs for these solids control equipment items are shown in Table 11-1. The net benefits of using this equipment will depend on such critical variables as the depth and diameter of the well and the cost and weight of the mud.

The costs of drilling a shallow well with a relatively inexpensive mud will generally be insufficient to justify spending large sums of money on solids control equipment. Deeper drilling operations with higher drilling mud costs can derive more financial benefit from solids control equipment Unfortunately, this equipment is frequently poorly installed or improperly maintained, resulting in reduced equipment efficiency (Rafferty, 1985).

Conscientious onsite waste management strategies can reduce many of these inefficiencies. For example, water is often used in the mud system and in cleaning the rig and equipment. Additional water also comes from rainwater. Proper water recycling and rainwater control systems can greatly reduce water volumes.

In an effort to improve solids control efficiency, new technologies have been developed that can greatly reduce wastes and decrease mud dilution rates. This equipment is generally

TABLE 11-1

RENTAL RATES FOR SOLIDS CONTROL EQUIPMENT

ITEM	DAILY RENTAL RATE
Shale Shakers	$150
Desanders	$ 90
Desilters	$ 90
Mud Cleaners	$150
Degassers	$ 50
Centrifuges (small)	$150
(large)	$200
Choke	$ 50
Monitoring Instrumentation	$ 50

Source: James Griffin, 1987.

0175V

referred to as a "closed loop" system. In "closed-loop" systems as much of the recyclable material is recovered as is technically feasible. Wastes are dewatered so that much of the water can be recycled as well. In fully closed systems the waste solids are held in tanks instead of pits. This is often done in environmentally sensitive areas where wastes are not allowed to be stored in surface impoundments.

A number of industry sources offer closed-loop systems at rental charges ranging from $1,500 to $2,000 per day (Slaughter, 1987; Rafferty, 1987). A recent industry study (Standard Oil, 1987) estimated a closed-loop system at $1,700 per day for solids control equipment and $500 per day for solids handling equipment. Thus, total equipment rental charges would vary from $1,500 to $2,200 per day. For a 14-day drilling program, such as might be required for a 5,000 foot well, costs would range from $21,000 to $30,800.

Many of these waste volume reduction techniques are also being used to clean up existing waste sites. By reducing waste volumes onsite, the final volume of waste that needs to be transported and treated can be reduced. This can substantially lower transportation and treatment costs.

12. Transportation

Transportation costs were developed for both drilling muds and produced waters. The drilling muds may be transported to any of the offsite facilities discussed above; the produced waters must be transported to injection well sites.

Hazardous drilling mud transit costs are based on a cost of $0.18-$0.22/ton-mile. This cost range was compiled through survey data (U.S. EPA, 1985). Assuming that drilling mud

weighs 575 lbs/bbl, transportation costs are approximately $0.06 per barrel-mile. For non-hazardous drilling muds, trucking costs are generally $40-$65/hour for vacuum trucks (Tesar, 1986; Brandon, 1987; Cangelosi, 1987). The capacity of these trucks is typically 80 to 110 barrels and their speeds average is approximately 30 mph. Thus, the cost of transporting these wastes is approximately $0.02 per barrel-mile.

For Class II well disposal, the costs for trucking produced water are estimated to be $30 to $35 per hour for an 80-barrel water truck (Epps and Associates, 1987). Assuming a speed of 30 mph, costs for transporting these wastes would be approximately $0.01 per barrel-mile.

Class I disposal would require transport as a hazardous waste. Thus, the transport cost estimate of $0.18-$0.22 per ton-mile for hazardous drilling wastes would be applicable. Assuming that produced water weighs 400 lb/barrel, transportation costs for hazardous produced water is approximately $0.04 per barrel-mile.

Using the above unit cost factors, Table 12-1 shows the cost of transporting drilling wastes and produced waters to disposal locations at varying distances from the well site. These costs can be as high as $3.00 per barrel. The costs presented in Table 12-1 will be used in conjunction with disposal costs to determine the least-cost disposal method under each waste management scenario. These estimates will be provided in the impact assessment.

TABLE 12-1

COST OF TRANSPORTING ONE BARREL OF WASTE VARYING DISTANCES

	UNIT TRANSIT COSTS ($/BARREL-MILE)	1 MILE ($/BARREL)	25 MILES ($/BARREL)	50 MILES ($/BARREL)
Hazardous Drilling Waste	0.06	0.06	1.50	3.00
Non-Hazardous Drilling Waste	0.02	0.02	0.50	1.00
Class II Produced Water	0.01	0.01	0.25	0.50
Class I Produced Water	0.04	0.04	1.00	2.00

0290V

13. References

American Petroleum Institute, 1986. Comments of the American Petroleum Institute on U.S. Environmental Protection Agency Proposed Rulemaking: Effluent Limitations Guidelines and New Source Performance Standards for the Offshore Segment of the Oil and Gas Extraction Point Source Category. March 15, 1986.

Brandon, Gregg, 1987. Personal communication between Scott Carlin, ERG, and Gregg Brandon, MP Vacuum Truck Service, April 9, 1987.

California Division of Oil and Gas, 1986. Telephone communication with personnel of the California Division of Oil and Gas, August 25, 1986.

Calloway, Michael. 1986. Stabilization of Drilling Muds In: Proceedings of a National Conference on Drilling Muds. University of Oklahoma Environmental Groundwater Institute.

Cangelosi, Richard, 1987. Personal communication between Scott Carlin, ERG, and Richard Cangelosi, ChemCo, Inc., April 9, 1987.

Cullinane, M. John, Larry W. Jones, and Phillip G. Malone. 1986. Handbook for Stabilization/Solidification of Hazardous Waste. EPA/540/2-86/001. June.

Camp Dresser & McKee, Inc., 1986. Superfund Treatment Technologies: A Vendor Inventory, EPA 540/2-8/004.

Erlandson, Steven, 1986. Personal communication between Anne Jones, ERG, and Steven Erlandson, Enreco, Inc., December 22, 1986;

Evans, Gordan, 1987. Personal communication between Scott Carlin, ERG, and Gordon Evans, K. W. Brown and Assoc., January 6, 1987.

Field, M. and Smith, W., 1986. "Design Considerations for Landfarming Non-Hazardous Oilfield Waste Drilling Fluids" in Proceedings of a National Conference on Drilling Muds: May, 1986., Enviornmental and Groundwater Institute, Oklahoma.

Freeman, B., 1987. Personal communication between Scott Carlin, ERG, and Bill Freeman, Shell Oil Company, March 26, 1987.

Freeman, B.D. and Deuel, L.E., 1986. "Closure of Freshwater Base Drilling Mud Pits in Wetland and Upland Areas" in Proceedings of a National Conference on Drilling Muds: May 1986., Environmental and Ground Water Institute, Oklahoma.

Hanson, Paul M. and Frederick V. Jones, 1986. Mud Disposal, an Industry Pespective. In: Drilling, May 1986.

Heffner, Michael T., 1987. Presentation by Standard Oil RCRA Task Force.

Jones, Fred, 1987. Personal communication between Scott Carlin, ERG, and Fred Jones, IMCO Services, February 20, 1987.

Jones, Maurice, 1982. "The Basics of Drilling Fluids" presented at the Technological Conference: Georges Bank: Hydrocarbon Exploration and Development, Massachusetts, April 1982.

Jones, Maurice, 1986. "A Review of Drill Cuttings Discharge Technology and Regulations from Offshore Platforms," presented at the National Conference on Drilling Muds, Oklahoma, May 1986.

Kline, 1980. Oil Field Chemicals: North America 1980, C. H. Kline & Co., 1980.

Means, 1985. Means Site Work Cost Data, 1986, R.S. Means Company, Inc., MA.

North America Environmental Service. 1985. Closure Plan for the Big Diamond Trucking Service, Inc. Drilling Mud Disposal Pit Near Sweet Lake, LA.

Pope Reid Associates, 1985. "Appendix F - Cost Model" in Liner Location Risk and Cost Analysis Model, prepared for EPA, Office of Solid Waste.

Pope-Reid Associates, 1985. Engineering Costs Supplement to Appendix F of the Liner Location Report. Prepared for EPA, Office of Solid waste.

Pope-Reid Associates, 1987. Land Treatment Computer Cost Model. Available on the EPA computer in Research Triangle Park, NC.

Pope-Reid Associates, 1987. Facilities Design Tool Cost Model. Available on the EPA computer in Research Triangle Park, NC.

Rafferty, Joe, 1987. Personal communication between Scott Carlin, ERG, and Joe Rafferty, Ramteck Systems, Inc., February 4, 1987.

Rafferty, Joe, 1985. "Recommended Practices for the Reduction of Drill Site Wastes" in Proceedings of a National Conference on Drilling Mud Wastes: May 1985, Environmental and Ground Water Institute, Oklahoma.

Siegmund, Tim, 1987. Personal communication between Scott Carlin, ERG, and Tim Siegmund, N.L. Baroid Inc., March 18, 1987.

Sherman, Lynn, 1987. Personal communication between Scott Carlin, ERG, and Lynn Sherman, Envirosafe Services, Inc., January 3, 1987.

Slaughter, Ken, 1987. Personal communication between Scott Carlin, ERG, and Ken Slaughter, New Park Waste Treatment Systems, February 5, 1987.

Strosnik, Joe, 1987. Personal communication between Scott Carlin, ERG, and Joe Strosnik, American Waste Processing, January 3, 1987.

Tesar, Laura, 1986. Personal communication between Anne Jones, ERG, and Laura Tesar, VenVirotek, December 31, 1986.

Trahan, Kevin, 1987. Personal communication between Scott Carlin, ERG, and Kevin Trahan, Campbell Wells, January 7, 1987.

U.S. Environmental Protection Agency, 1986. "1985 Survey of Selected Firms in the Commercial Hazardous Waste Management Industry," EPA Office of Policy Analysis, November 6, 1986.

Webster, William, 1987. Personal communication between Anne Jones, ERG, and William Webster, Envirite, January 7, 1987.

0230V

APPENDIX A

SURFACE IMPOUNDMENT MODEL RUNS FROM THE POPE-REID FACILITIES DESIGN TOOL COST MODEL

```
                    *********
                    MODEL RUN
                    *********

<><><><><><><><><><><><><><><><><><><><><><><><><><><><><><><><><><><><><><>
<><><><><><><><><><><><><><><><>RESULTS><><><><><><><><><><><><><><><><><>
<><><><><><><><><><><><><><><><><><><><><><><><><><><><><><><><><><><><><>


                  ::::::::::
                  FACILITY  1
                  ::::::::::

BASELINE FACILITY
-----------------------------
OPERATING AREA....................        0.25 ACRES
OPERATING AREA....................     1011.71 SQ M
OPERATING VOLUME..................       2064. CU M
SURFACE LENGTH....................       31.81 METERS
SURFACE WIDTH.....................       31.81 METERS
TOTAL EXCAVATION VOLUME...........       2064. CU M

FINAL COVER
-----------
SOIL VOLUME OF FILL AND SLOPE.....       1194. CU M
LAYER  1 CONSISTS OF BANK RUN GRAVEL
     VOLUME OF LAYER  1...........         69. CU M
VOLUME OF COVER CUT OFF FILL......          0. CU M
SURFACE AREA FINAL COVER..........       1283. SQ M
LENGTH OF COVER DRAINAGE TILE.....     127.49 METERS
TOTAL AREA TO BE REVEGETATED......       1283. SQ M
SURFACE AREA TO BE POISONED.......          0. SQ M
DIVERSION DITCH LENGTH............     143.23 METERS
FINAL COVER THICKNESS INCREASED TO       0.08 METERS

********** COST SUMMARY **********

EXCAVATION COST............... $        7532.
TOTAL LEACHATE BRANCH COST... $           0.
TOTAL LEACHATE MAIN COST..... $           0.
WET WELL AND SUMP COST....... $           0.
LEACHATE TREATMENT COST...... $           0.
FINAL COVER
-----------
FILL AND SLOPE COST.......... $        8883.
COST OF LAYER  1
BANKRUN GRAVEL............... $           0.
FINAL COVER CUT OFF COST..... $           0.
COVER REVEGETATION COST...... $           0.
COVER DRAINAGE TILE COST..... $        1453.
SOIL POISONING COST.......... $           0.
RUN-ON CONTROL COST.......... $         952.
                              -----------
SUBTOTAL..................... $       18821.
```

```
ENGINEERING FEE............. $        1882.
INSPECTION FEE.............. $         941.
OTHER FEE................... $           0.
                                  ----------
SUBTOTAL.................... $       21644.
CONTINGENCY................. $        3247.
                                  ==========
TOTAL DESIGN COST........... $       24891.
```

```
           ::::::::::
           FACILITY  2
           ::::::::::

INTERMEDIATE ON-SITE
----------------------------
OPERATING AREA....................        0.25 ACRES
OPERATING AREA....................     1011.71 SQ M
OPERATING VOLUME..................       2064. CU M
SURFACE LENGTH....................       31.81 METERS
SURFACE WIDTH.....................       31.81 METERS
TOTAL EXCAVATION VOLUME...........       2064. CU M
LAYER  1 CONSISTS OF  30 MIL SYNTHETIC MEMB.
     SURFACE AREA OF LAYER  1.....       1342. SQ M
LAYER  2 CONSISTS OF  20 MIL SYNTHETIC MEMB.
     SURFACE AREA OF LAYER  2.....       1342. SQ M

BERM
----
BERM CONSTRUCTION.................        278. CU M
BERM SURFACE AREA.................        678. SQ M

FINAL COVER
-----------
SOIL VOLUME OF FILL AND SLOPE.....       1194. CU M
LAYER  1 CONSISTS OF  36 MIL SYNTHETIC MEMB.
     SURFACE AREA OF LAYER  1.....       1283. SQ M
LAYER  2 CONSISTS OF TOP SOIL
     VOLUME OF LAYER  2...........        376. CU M
VOLUME OF COVER CUT OFF FILL......          8. CU M
SURFACE AREA FINAL COVER..........       1362. SQ M
LENGTH OF COVER DRAINAGE TILE.....        0.0  METERS
TOTAL AREA TO BE REVEGETATED......       2040. SQ M
SURFACE AREA TO BE POISONED.......         79. SQ M
DIVERSION DITCH LENGTH............     147.06 METERS

********** COST SUMMARY **********

EXCAVATION COST............. $        7532.
BERM CONSTRUCTION........... $        2068.
COST OF LAYER  1
 30 MIL SYNTHETIC MEMB....... $        7222.
COST OF LAYER  2
```

20 MIL SYNTHETIC MEMB.....	$	2363.
TOTAL LEACHATE BRANCH COST...	$	0.
TOTAL LEACHATE MAIN COST.....	$	0.
WET WELL AND SUMP COST.....	$	0.
LEACHATE TREATMENT COST.....	$	0.
FINAL COVER		

FILL AND SLOPE COST.....	$	8883.
COST OF LAYER 1		
36 MIL SYNTHETIC MEMB.....	$	4143.
COST OF LAYER 2		
TOP SOIL.....	$	6451.
FINAL COVER CUT OFF COST.....	$	62.
BERM REVEGETATION COST.....	$	237.
COVER REVEGETATION COST.....	$	477.
COVER DRAINAGE TILE COST.....	$	0.
SOIL POISONING COST.....	$	79.
RUN-ON CONTROL COST.....	$	978.

SUBTOTAL.....	$	40494.
ENGINEERING FEE.....	$	4049.
INSPECTION FEE.....	$	2025.
OTHER FEE.....	$	0.

SUBTOTAL.....	$	46568.
CONTINGENCY.....	$	6985.
		==========
TOTAL DESIGN COST.....	$	53554.

::::::::::
FACILITY 3
::::::::::

INTER. ON-SITE W/ MONITORING

OPERATING AREA.....	0.25	ACRES
OPERATING AREA.....	1011.71	SQ M
OPERATING VOLUME.....	2064.	CU M
SURFACE LENGTH.....	31.81	METERS
SURFACE WIDTH.....	31.81	METERS
TOTAL EXCAVATION VOLUME.....	2447.	CU M
LAYER 1 CONSISTS OF 30 MIL SYNTHETIC MEMB.		
SURFACE AREA OF LAYER 1.....	1342.	SQ M
LAYER 2 CONSISTS OF BANK RUN SAND		
VOLUME OF LAYER 2.....	384.	CU M
NUMBER OF LEACHATE BRANCHES..	1	
LEACHATE BRANCH.....	15.34	METERS
LEACHATE MAIN.....	14.87	METERS
LAYER 3 CONSISTS OF 30 MIL SYNTHETIC MEMB.		
SURFACE AREA OF LAYER 3.....	1469.	SQ M
LAYER 4 CONSISTS OF 20 MIL SYNTHETIC MEMB.		
SURFACE AREA OF LAYER 4.....	1469.	SQ M

BERM

BERM CONSTRUCTION..... 278. CU M
BERM SURFACE AREA..... 678. SQ M

FINAL COVER

SOIL VOLUME OF FILL AND SLOPE..... 1194. CU M
LAYER 1 CONSISTS OF 36 MIL SYNTHETIC MEMB.
SURFACE AREA OF LAYER 1..... 1283. SQ M
LAYER 2 CONSISTS OF BANK RUN SAND
VOLUME OF LAYER 2..... 376. CU M
LAYER 3 CONSISTS OF 60 MIL SYNTHETIC MEMB.
SURFACE AREA OF LAYER 3..... 1585. SQ M
LAYER 4 CONSISTS OF TOP SOIL
VOLUME OF LAYER 4..... 385. CU M
VOLUME OF COVER CUT OFF FILL..... 43. CU M
SURFACE AREA FINAL COVER..... 1466. SQ M
LENGTH OF COVER DRAINAGE TILE..... 143.23 METERS
TOTAL AREA TO BE REVEGETATED..... 2144. SQ M
SURFACE AREA TO BE POISONED..... 1466. SQ M
DIVERSION DITCH LENGTH..... 151.86 METERS

********** COST SUMMARY **********

EXCAVATION COST..... $ 8933.
BERM CONSTRUCTION..... $ 2068.
COST OF LAYER 1
30 MIL SYNTHETIC MEMB..... $ 7222.
COST OF LAYER 2
BANKRUN SAND..... $ 5211.
COST OF LAYER 3
30 MIL SYNTHETIC MEMB..... $ 7901.
COST OF LAYER 4
20 MIL SYNTHETIC MEMB..... $ 2585.
TOTAL LEACHATE BRANCH COST... $ 175.
TOTAL LEACHATE MAIN COST..... $ 275.
WET WELL AND SUMP COST..... $ 9800.
LEACHATE TREATMENT COST..... $ 0.
FINAL COVER

FILL AND SLOPE COST..... $ 8883.
COST OF LAYER 1
36 MIL SYNTHETIC MEMB..... $ 4143.
COST OF LAYER 2
BANKRUN SAND..... $ 5114.
COST OF LAYER 3
60 MIL SYNTHETIC MEMB..... $ 1680.
COST OF LAYER 4
TOP SOIL..... $ 6584.
FINAL COVER CUT OFF COST..... $ 316.
BERM REVEGETATION COST..... $ 237.
COVER REVEGETATION COST..... $ 513.
COVER DRAINAGE TILE COST..... $ 1633.
SOIL POISONING COST..... $ 1466.

RUN-ON CONTROL COST.....	$	1010.
SUBTOTAL.....	$	75760.
ENGINEERING FEE.....	$	7576.
INSPECTION FEE.....	$	3788.
OTHER FEE.....	$	0.
SUBTOTAL.....	$	87124.
CONTINGENCY.....	$	13069.
TOTAL DESIGN COST.....	$	100192.

::::::::::
FACILITY 4
::::::::::

INTERMEDIATE OFF-SITE

OPERATING AREA.....	15.00	ACRES
OPERATING AREA.....	60702.84	SQ M
OPERATING VOLUME.....	387571.	CU M
SURFACE LENGTH.....	246.38	METERS
SURFACE WIDTH.....	246.38	METERS
TOTAL EXCAVATION VOLUME.....	406516.	CU M
LAYER 1 CONSISTS OF BANK RUN SAND		
VOLUME OF LAYER 1.....	18944.	CU M
NUMBER OF LEACHATE BRANCHES..	0	
LEACHATE BRANCH.....	0.0	METERS
LEACHATE MAIN.....	0.0	METERS
LAYER 2 CONSISTS OF 30 MIL SYNTHETIC MEMB.		
SURFACE AREA OF LAYER 2.....	64679.	SQ M
LAYER 3 CONSISTS OF 20 MIL SYNTHETIC MEMB.		
SURFACE AREA OF LAYER 3.....	64879.	SQ M

BERM

BERM CONSTRUCTION.....	1926.	CU M
BERM SURFACE AREA.....	4698.	SQ M

FINAL COVER

SOIL VOLUME OF FILL AND SLOPE.....	269321.	CU M
LAYER 1 CONSISTS OF 36 MIL SYNTHETIC MEMB.		
SURFACE AREA OF LAYER 1.....	62718.	SQ M
LAYER 2 CONSISTS OF TOP SOIL		
VOLUME OF LAYER 2.....	18755.	CU M
VOLUME OF COVER CUT OFF FILL.....	58.	CU M
SURFACE AREA FINAL COVER.....	63257.	SQ M
LENGTH OF COVER DRAINAGE TILE.....	0.0	METERS
TOTAL AREA TO BE REVEGETATED.....	67955.	SQ M
SURFACE AREA TO BE POISONED.....	538.	SQ M
DIVERSION DITCH LENGTH.....	1005.35	METERS

********** COST SUMMARY **********

EXCAVATION COST.....	$	1483782.
BERM CONSTRUCTION.....	$	14325.
COST OF LAYER 1		
BANKRUN SAND.....	$	257361.
COST OF LAYER 2		
30 MIL SYNTHETIC MEMB.....	$	349047.
COST OF LAYER 3		
20 MIL SYNTHETIC MEMB.....	$	114187.
TOTAL LEACHATE BRANCH COST...	$	0.
TOTAL LEACHATE MAIN COST.....	$	0.
WET WELL AND SUMP COST.....	$	0.
LEACHATE TREATMENT COST.....	$	0.
FINAL COVER		

FILL AND SLOPE COST.....	$	2003071.
COST OF LAYER 1		
36 MIL SYNTHETIC MEMB.....	$	202578.
COST OF LAYER 2		
TOP SOIL.....	$	321371.
FINAL COVER CUT OFF COST.....	$	428.
BERM REVEGETATION COST.....	$	1644.
COVER REVEGETATION COST.....	$	22140.
COVER DRAINAGE TILE COST.....	$	0.
SOIL POISONING COST.....	$	538.
RUN-ON CONTROL COST.....	$	6686.

SUBTOTAL.....	$	4777157.
ENGINEERING FEE.....	$	477716.
INSPECTION FEE.....	$	238858.
OTHER FEE.....	$	0.

SUBTOTAL.....	$	5493731.
CONTINGENCY.....	$	824060.
		==========
TOTAL DESIGN COST.....	$	6317791.

::::::::::
FACILITY 5
::::::::::

INTER. OFF -SITE W/ MONITORIN

OPERATING AREA.....	15.00	ACRES
OPERATING AREA.....	60702.84	SQ M
OPERATING VOLUME.....	387571.	CU M
SURFACE LENGTH.....	246.38	METERS
SURFACE WIDTH.....	246.38	METERS
TOTAL EXCAVATION VOLUME.....	425735.	CU M

LAYER 1 CONSISTS OF BANK RUN SAND

```
     VOLUME OF LAYER  1...........      18944. CU M
     NUMBER OF LEACHATE BRANCHES..          0
     LEACHATE BRANCH..............        0.0  METERS
     LEACHATE MAIN................        0.0  METERS
LAYER  2 CONSISTS OF  30 MIL SYNTHETIC MEMB.
     SURFACE AREA OF LAYER  2.....      64879. SQ M
LAYER  3 CONSISTS OF BANK RUN SAND
     VOLUME OF LAYER  3...........      19220. CU M
     NUMBER OF LEACHATE BRANCHES..         14
     LEACHATE BRANCH..............    2937.64 METERS
     LEACHATE MAIN................     199.86 METERS
LAYER  4 CONSISTS OF  30 MIL SYNTHETIC MEMB.
     SURFACE AREA OF LAYER  4.....      65754. SQ M
LAYER  5 CONSISTS OF  20 MIL SYNTHETIC MEMB.
     SURFACE AREA OF LAYER  5.....      65754. SQ M

BERM
----
BERM CONSTRUCTION................       1926. CU M
BERM SURFACE AREA................       4698. SQ M

FINAL COVER
-----------
SOIL VOLUME OF FILL AND SLOPE.....    269321. CU M
LAYER  1 CONSISTS OF  36 MIL SYNTHETIC MEMB.
     SURFACE AREA OF LAYER  1.....      62718. SQ M
LAYER  2 CONSISTS OF BANK RUN SAND
     VOLUME OF LAYER  2...........      18755. CU M
LAYER  3 CONSISTS OF  60 MIL SYNTHETIC MEMB.
     SURFACE AREA OF LAYER  3.....      64738. SQ M
LAYER  4 CONSISTS OF TOP SOIL
     VOLUME OF LAYER  4...........      18816. CU M
VOLUME OF COVER CUT OFF FILL......        293. CU M
SURFACE AREA FINAL COVER..........      63938. SQ M
LENGTH OF COVER DRAINAGE TILE.....    1001.52 METERS
TOTAL AREA TO BE REVEGETATED......      68636. SQ M
SURFACE AREA TO BE POISONED.......      63938. SQ M
DIVERSION DITCH LENGTH............    1010.15 METERS

********** COST SUMMARY **********

EXCAVATION COST............... $     1553933.
BERM CONSTRUCTION............ $       14325.
COST OF LAYER  1
BANKRUN SAND................. $      257361.
COST OF LAYER  2
 30 MIL SYNTHETIC MEMB....... $      349047.
COST OF LAYER  3
BANKRUN SAND................. $      261099.
COST OF LAYER  4
 30 MIL SYNTHETIC MEMB....... $      353755.
COST OF LAYER  5
 20 MIL SYNTHETIC MEMB....... $      115726.
TOTAL LEACHATE BRANCH COST... $       33489.
TOTAL LEACHATE MAIN COST..... $        3697.
WET WELL AND SUMP COST....... $        9800.
```

```
LEACHATE TREATMENT COST...... $          0.
FINAL COVER
-----------
FILL AND SLOPE COST.......... $    2003071.
COST OF LAYER  1
 36 MIL SYNTHETIC MEMB....... $     202578.
COST OF LAYER  2
BANKRUN SAND................ $     254790.
COST OF LAYER  3
 60 MIL SYNTHETIC MEMB....... $      68622.
COST OF LAYER  4
TOP SOIL.................... $     322405.
FINAL COVER CUT OFF COST..... $       2176.
BERM REVEGETATION COST....... $       1644.
COVER REVEGETATION COST...... $      22378.
COVER DRAINAGE TILE COST..... $      11417.
SOIL POISONING COST.......... $      63938.
RUN-ON CONTROL COST.......... $       6718.
                                -----------
SUBTOTAL.................... $    5911970.
ENGINEERING FEE............. $     591197.
INSPECTION FEE.............. $     295598.
OTHER FEE................... $          0.
                                -----------
SUBTOTAL.................... $    6798765.
CONTINGENCY................. $    1019815.
                                ===========
TOTAL DESIGN COST........... $    7818580.
```

```
::::::::::::
FACILITY  6
::::::::::::

RCRA FACILITY
-----------------------------
OPERATING AREA...................      15.00 ACRES
OPERATING AREA...................   60702.84 SQ M
OPERATING VOLUME.................    387571. CU M
SURFACE LENGTH...................     246.38 METERS
SURFACE WIDTH....................     246.38 METERS
TOTAL EXCAVATION VOLUME..........    486416. CU M
LAYER  1 CONSISTS OF BANK RUN SAND
     VOLUME OF LAYER  1..........     18944. CU M
     NUMBER OF LEACHATE BRANCHES..        0
     LEACHATE BRANCH.............       0.0  METERS
     LEACHATE MAIN...............       0.0  METERS
LAYER  2 CONSISTS OF  30 MIL SYNTHETIC MEMB.
     SURFACE AREA OF LAYER  2.....     64879. SQ M
LAYER  3 CONSISTS OF BANK RUN SAND
     VOLUME OF LAYER  3..........     19220. CU M
     NUMBER OF LEACHATE BRANCHES..        0
     LEACHATE BRANCH.............       0.0  METERS
```

```
     LEACHATE MAIN................          0.0  METERS
LAYER  4 CONSISTS OF  30 MIL SYNTHETIC MEMB.
     SURFACE AREA OF LAYER  4.....      65754. SQ M
LAYER  5 CONSISTS OF OFF-SITE CLAY
     VOLUME OF LAYER  5...........      60681. CU M

BERM
----
BERM CONSTRUCTION.................       1926. CU M
BERM SURFACE AREA.................       4698. SQ M

FINAL COVER
-----------
SOIL VOLUME OF FILL AND SLOPE.....     269321. CU M
LAYER  1 CONSISTS OF OFF-SITE CLAY
     VOLUME OF LAYER  1...........      38644. CU M
LAYER  2 CONSISTS OF  36 MIL SYNTHETIC MEMB.
     SURFACE AREA OF LAYER  2.....      66886. SQ M
LAYER  3 CONSISTS OF BANK RUN SAND
     VOLUME OF LAYER  3...........      19450. CU M
LAYER  4 CONSISTS OF  60 MIL SYNTHETIC MEMB.
     SURFACE AREA OF LAYER  4.....      66885. SQ M
LAYER  5 CONSISTS OF TOP SOIL
     VOLUME OF LAYER  5...........      38900. CU M
VOLUME OF COVER CUT OFF FILL......       1944. CU M
SURFACE AREA FINAL COVER..........      68035. SQ M
LENGTH OF COVER DRAINAGE TILE.....     1018.26 METERS
TOTAL AREA TO BE REVEGETATED......      72733. SQ M
SURFACE AREA TO BE POISONED.......      68035. SQ M
DIVERSION DITCH LENGTH............     1040.29 METERS
CUT OFF FOR COVER INCREASED TO....        4.09 METERS

********** COST SUMMARY **********

EXCAVATION COST............... $     1775418.
BERM CONSTRUCTION............ $       14325.
COST OF LAYER  1
BANKRUN SAND................. $      257361.
COST OF LAYER  2
 30 MIL SYNTHETIC MEMB....... $      349047.
COST OF LAYER  3
BANKRUN SAND................. $      261099.
COST OF LAYER  4
 30 MIL SYNTHETIC MEMB....... $      353755.
COST OF LAYER  5
OFF-SITE CLAY................ $     1729404.
TOTAL LEACHATE BRANCH COST... $           0.
TOTAL LEACHATE MAIN COST..... $           0.
WET WELL AND SUMP COST....... $           0.
LEACHATE TREATMENT COST...... $           0.
FINAL COVER
-----------
FILL AND SLOPE COST.......... $     2003071.
COST OF LAYER  1
OFF-SITE CLAY................ $     1101359.
COST OF LAYER  2
```

```
 36 MIL SYNTHETIC MEMB....... $      216040.
COST OF LAYER  3
BANKRUN SAND................. $      264227.
COST OF LAYER  4
 60 MIL SYNTHETIC MEMB....... $       70899.
COST OF LAYER  5
TOP SOIL..................... $      666548.
FINAL COVER CUT OFF COST..... $       14457.
BERM REVEGETATION COST....... $        1644.
COVER REVEGETATION COST...... $       23812.
COVER DRAINAGE TILE COST..... $       11608.
SOIL POISONING COST.......... $       68035.
RUN-ON CONTROL COST.......... $        6918.
                                -----------
SUBTOTAL..................... $     9189027.
ENGINEERING FEE.............. $      918903.
INSPECTION FEE............... $      459451.
OTHER FEE.................... $           0.
                                -----------
SUBTOTAL..................... $    10567382.
CONTINGENCY.................. $     1585107.
                                ===========
TOTAL DESIGN COST........... $    12152488.
```

::::::::::
FACILITY 7
::::::::::

RCRA FACILITY W/ MONITORING

```
OPERATING AREA....................      15.00 ACRES
OPERATING AREA....................   60702.84 SQ M
OPERATING VOLUME..................    387571. CU M
SURFACE LENGTH....................     246.38 METERS
SURFACE WIDTH.....................     246.38 METERS
TOTAL EXCAVATION VOLUME...........    486416. CU M
LAYER  1 CONSISTS OF BANK RUN SAND
     VOLUME OF LAYER  1...........     18944. CU M
     NUMBER OF LEACHATE BRANCHES..         0
     LEACHATE BRANCH..............       0.0  METERS
     LEACHATE MAIN................       0.0  METERS
LAYER  2 CONSISTS OF  30 MIL SYNTHETIC MEMB.
     SURFACE AREA OF LAYER  2.....     64879. SQ M
LAYER  3 CONSISTS OF BANK RUN SAND
     VOLUME OF LAYER  3...........     19220. CU M
     NUMBER OF LEACHATE BRANCHES..        14
     LEACHATE BRANCH..............   2937.64 METERS
     LEACHATE MAIN................    199.86 METERS
LAYER  4 CONSISTS OF  30 MIL SYNTHETIC MEMB.
     SURFACE AREA OF LAYER  4.....     65754. SQ M
LAYER  5 CONSISTS OF OFF-SITE CLAY
     VOLUME OF LAYER  5...........     60681. CU M
```

```
BERM
----
BERM CONSTRUCTION................       1926. CU M
BERM SURFACE AREA................       4698. SQ M

FINAL COVER
-----------
SOIL VOLUME OF FILL AND SLOPE.....     269321. CU M
LAYER  1 CONSISTS OF OFF-SITE CLAY
     VOLUME OF LAYER  1...........      38644. CU M
LAYER  2 CONSISTS OF  36 MIL SYNTHETIC MEMB.
     SURFACE AREA OF LAYER  2.....      66886. SQ M
LAYER  3 CONSISTS OF BANK RUN SAND
     VOLUME OF LAYER  3...........      19450. CU M
LAYER  4 CONSISTS OF  60 MIL SYNTHETIC MEMB.
     SURFACE AREA OF LAYER  4.....      66885. SQ M
LAYER  5 CONSISTS OF TOP SOIL
     VOLUME OF LAYER  5...........      38900. CU M
VOLUME OF COVER CUT OFF FILL......       1944. CU M
SURFACE AREA FINAL COVER..........      68035. SQ M
LENGTH OF COVER DRAINAGE TILE.....    1018.26 METERS
TOTAL AREA TO BE REVEGETATED......      72733. SQ M
SURFACE AREA TO BE POISONED.......      68035. SQ M
DIVERSION DITCH LENGTH............    1040.29 METERS
CUT OFF FOR COVER INCREASED TO....       4.09 METERS

********** COST SUMMARY **********

EXCAVATION COST............... $     1775418.
BERM CONSTRUCTION............ $       14325.
COST OF LAYER  1
BANKRUN SAND................. $      257361.
COST OF LAYER  2
 30 MIL SYNTHETIC MEMB....... $      349047.
COST OF LAYER  3
BANKRUN SAND................. $      261099.
COST OF LAYER  4
 30 MIL SYNTHETIC MEMB....... $      353755.
COST OF LAYER  5
OFF-SITE CLAY................ $     1729404.
TOTAL LEACHATE BRANCH COST... $       33489.
TOTAL LEACHATE MAIN COST..... $        3697.
WET WELL AND SUMP COST....... $        9800.
LEACHATE TREATMENT COST...... $           0.
FINAL COVER
-----------
FILL AND SLOPE COST.......... $     2003071.
COST OF LAYER  1
OFF-SITE CLAY................ $     1101359.
COST OF LAYER  2
 36 MIL SYNTHETIC MEMB....... $      216040.
COST OF LAYER  3
BANKRUN SAND................. $      264227.
COST OF LAYER  4
 60 MIL SYNTHETIC MEMB....... $       70899.
```

COST OF LAYER 5

TOP SOIL.....	$	666548.
FINAL COVER CUT OFF COST.....	$	14457.
BERM REVEGETATION COST.....	$	1644.
COVER REVEGETATION COST.....	$	23812.
COVER DRAINAGE TILE COST.....	$	11608.
SOIL POISONING COST.....	$	68035.
RUN-ON CONTROL COST.....	$	6918.
SUBTOTAL.....	$	9236014.
ENGINEERING FEE.....	$	923601.
INSPECTION FEE.....	$	461801.
OTHER FEE.....	$	0.
SUBTOTAL.....	$	10621416.
CONTINGENCY.....	$	1593212.
TOTAL DESIGN COST.....	$	12214628.

NOTES TO APPENDIX A

In these tables the following labels have changed:

The label:	should read:
20-mil synthetic liner	geotextile support fabric
30-mil synthetic liner	30-mil HDPE liner
36-mil synthetic liner	30-mil PVC liner
60-mil synthetic liner	geotextile filter fabric

In addition, all odd numbered facilities, except Facility 1, were modeled to calculate the site management costs and monitoring costs associated with the previous facility. (For example, Facility 3 captures the monitoring costs associated with Facility 2.) Certain site management and monitoring costs could not be removed from the even numbered facilities and Facility One. These costs were manually subtracted from the facility totals. These costs include: Cover Drainage Title Cost, Soil Poisioning Cost and Run-On Control Cost.

APPENDIX B

COSTS FOR CLASS I AND CLASS II INJECTION WELLS

Prepared by Epps and Associates Consulting Engineers, Inc. The costs for Class I wells are for drilling new wells. The costs for Class II wells are for converting existing wells into injection wells.

DATE: 1/30/87

AUTHORIZATION FOR EXPENDITURE

AFE NO.: _____

WELL NAME & NO.: _____ PROSPECT/LEASE NO.: _____

LOCATION: Appalachian Basin FIELD: _____

COUNTY: _____ STATE: Pennsylvania PTD: 7000'

REQUESTED BY: _____ PREPARED BY: _____

OBJECTIVE: Drill and complete a Class I Hazardous Waste Disposal Well; 1000' below top of Bradford Formation

171	172	INTANGIBLE EXPENSES	DRY HOLE		TOTAL
006		DAMAGES, RIGHT OF WAY, PERMIT	$ 4,000	$ -0-	$ 4,000
011		CONDUCTOR PIPE SERVICES	N/A	-0-	-0-
005		LOCATION, ROAD WORK & CLEAN UP	15,000	5,000	20,000
002		MOBILIZATION/DEMOBILIZATION, etc.	20,000	-0-	20,000
001		DRILLING RIG – DAYWORK	155,750	4,450	160,200
001		– FOOTAGE	-0-	-0-	-0-
001		– TURNKEY	-0-	-0-	-0-
	101	COMPLETION RIG	-0-	17,550	17,550
003		FUEL	17,500	500	18,000
004		WATER	9,000	1,500	10,500
007		DRILLING FLUIDS	27,000	3,200	30,200
009		BITS, COREHEAD, DRLG. TOOLS	37,340	500	37,840
010	103	RENTALS	7,800	5,500	13,300
012	102	CEMENTING	30,855	24,763	55,618
013	107	CONTRACT LABOR	26,950	12,350	39,300
014	105	LOGGING & PERFORATING	50,310	18,136	68,446
015	110	SUPERVISION & OVERHEAD	3,000	800	3,800
024	114	TRANSPORTATION	4,800	3,800	9,600
026	104	SPECIAL SERVICES (DST's, etc.)	11,400	-0-	11,400
016	111	MISCELLANEOUS (10%)	42,000	12,000	54,000
025		PLUG & ABANDONMENT	N/A	-0-	-0-
	106	STIMULATION		18,000	18,000
	108	NON-CONTROLLED EQUIPMENT		-0-	-0-
TOTAL INTANGIBLE EXPENSES			$ 462,705	$ 128,049	$ 590,754

	TANGIBLE EXPENSES	DRY HOLE	COMPLETION	TOTAL
	CONDUCTOR CSG.	N/A		N/A
	SURFACE CSG.	7,059		7,059
	INTERMEDIATE CSG.	63,040		63,040
	WELLHEAD	4,500	7,000	11,500
	PRODUCTION CSG.		101,990	101,990
	LINER		10,854	10,854
	TUBING		66,933	66,933
	DOWNHOLE EQUIPMENT	-0-	3,000	3,000
	ARTIFICIAL LIFT		-0-	-0-
	PRODUCTION FACILITIES		-0-	-0-
	MISCELLANEOUS	-0-	-0-	-0-
TOTAL TANGIBLE EXPENSES		$ 74,599	$ 189,777	$ 264,376
TOTAL WELL COST ESTIMATE		$ 537,304	$ 317,826	$ 855,130

DATE : 2/1/87

AUTHORIZATION FOR EXPENDITURE

AFE NO. :

WELL NAME & NO.: PROSPECT/LEASE NO.:

LOCATION : Mississippi Salt Dome FIELD :

COUNTY : STATE : Mississippi PTD : 5000'

REQUESTED BY: PREPARED BY:

OBJECTIVE : Drill & Complete a Class I Hazardous Waste Disposal Well; 1000' below top of Wilcox Formation

171	172	INTANGIBLE EXPENSES	DRY HOLE		TOTAL
006		DAMAGES, RIGHT OF WAY, PERMIT	$ 6,000	$ -0-	$ 6,000
011		CONDUCTOR PIPE SERVICES	3,500	-0-	3,500
005		LOCATION, ROAD WORK & CLEAN UP	10,000	5,000	15,000
002		MOBILIZATION/ DEMOBILIZATION, etc.	19,000	-0-	19,000
001		DRILLING RIG – DAYWORK	100,000	4,000	104,000
001		– FOOTAGE	-0-	-0-	-0-
001		– TURNKEY	-0-	-0-	-0-
	101	COMPLETION RIG	-0-	16,000	16,000
003		FUEL	Contractor	Contractor	-0-
004		WATER	6,000	1,500	7,500
007		DRILLING FLUIDS	23,000	2,500	25,500
009		BITS, COREHEAD, DRLG. TOOLS	29,790	500	30,290
010	103	RENTALS	7,800	5,500	13,300
012	102	CEMENTING	30,855	18,732	49,587
013	107	CONTRACT LABOR	22,510	10,350	32,860
014	105	LOGGING & PERFORATING	38,050	12,650	50,700
015	110	SUPERVISION & OVERHEAD	2,200	700	2,900
024	114	TRANSPORTATION	3,450	3,150	6,600
026	104	SPECIAL SERVICES (DST's, etc.)	11,400	-0-	11,400
016	111	MISCELLANEOUS (10%)	31,500	10,000	41,500
025		PLUG & ABANDONMENT	N/A	-0-	-0-
	106	STIMULATION		18,000	18,000
	108	NON-CONTROLLED EQUIPMENT		-0-	-0-
TOTAL INTANGIBLE EXPENSES			$ 345,055	$ 108,582	$ 453,637

	TANGIBLE EXPENSES	DRY HOLE	COMPLETION	TOTAL
	CONDUCTOR CSG.	$ 1,000		$ 1,000
	SURFACE CSG.	6,894		6,894
	INTERMEDIATE CSG.	61,600		61,600
	WELLHEAD	4,500	7,000	11,500
	PRODUCTION CSG.		72,000	72,000
	LINER		10,293	10,293
	TUBING		46,718	46,718
	DOWNHOLE EQUIPMENT	-0-	3,000	3,000
	ARTIFICIAL LIFT		-0-	-0-
	PRODUCTION FACILITIES		-0-	-0-
	MISCELLANEOUS	-0-	-0-	-0-
TOTAL TANGIBLE EXPENSES		$ 73,994	$ 139,011	$ 213,005
TOTAL WELL COST ESTIMATE		$ 419,049	$ 247,593	$ 666,642

DATE: 1/29/87

AUTHORIZATION FOR EXPENDITURE

AFE NO.: _____

WELL NAME & NO.: _____ PROSPECT/LEASE NO.: _____

LOCATION: ARK. - LA. Basin FIELD: E. Texas, SW Arkansas

COUNTY: _____ STATE: N. Louisiana PTD: 4000'

REQUESTED BY: _____ PREPARED BY: _____

OBJECTIVE: Drill & complete a Class I Hazardous Waste Disposal Well: 1000' below top of Buck Range Formation

171	172	INTANGIBLE EXPENSES	DRY HOLE		TOTAL
006		DAMAGES, RIGHT OF WAY, PERMIT	$ 5,000	$ -0-	$ 5,000
011		CONDUCTOR PIPE SERVICES	3,500	-0-	3,500
005		LOCATION, ROAD WORK & CLEAN UP	8,000	5,000	13,000
002		MOBILIZATION/DEMOBILIZATION, etc.	19,000	-0-	19,000
001		DRILLING RIG – DAYWORK	96,000	4,000	100,000
001		– FOOTAGE	-0-	-0-	-0-
001		– TURNKEY	-0-	-0-	-0-
	101	COMPLETION RIG	-0-	15,200	15,200
003		FUEL	Contractor	Contractor	-0-
004		WATER	5,000	1,000	6,000
007		DRILLING FLUIDS	17,000	2,000	19,000
009		BITS, COREHEAD, DRLG. TOOLS	28,040	500	28,540
010	103	RENTALS	7,500	5,500	13,000
012	102	CEMENTING	28,640	17,151	45,791
013	107	CONTRACT LABOR	21,420	9,700	31,120
014	105	LOGGING & PERFORATING	33,320	10,916	44,236
015	110	SUPERVISION & OVERHEAD	2,100	700	2,800
024	114	TRANSPORTATION	3,450	3,150	6,600
026	104	SPECIAL SERVICES (DST's, etc.)	11,400	-0-	11,400
016	111	MISCELLANEOUS (10%)	29,000	9,500	38,500
025		PLUG & ABANDONMENT	N/A	-0-	-0-
	106	STIMULATION		18,000	18,000
	108	NON-CONTROLLED EQUIPMENT		-0-	-0-
TOTAL INTANGIBLE EXPENSES			$ 318,370	$ 102,317	$ 420,687

	TANGIBLE EXPENSES	DRY HOLE	COMPLETION	TOTAL
	CONDUCTOR CSG.	$ 1,000		$ 1,000
	SURFACE CSG.	6,732		6,732
	INTERMEDIATE CSG.	45,120		45,120
	WELLHEAD	4,500	7,000	11,500
	PRODUCTION CSG.		56,920	56,920
	LINER		6,549	6,549
	TUBING		36,630	36,630
	DOWNHOLE EQUIPMENT	-0-	3,000	3,000
	ARTIFICIAL LIFT		-0-	-0-
	PRODUCTION FACILITIES		-0-	-0-
	MISCELLANEOUS	-0-	-0-	-0-
TOTAL TANGIBLE EXPENSES		$ 57,352	$ 110,099	$ 167,451
TOTAL WELL COST ESTIMATE		$ 375,722	[illegible]	[illegible]

DATE : 1/29/87

AUTHORIZATION FOR EXPENDITURE

AFE NO.: _____

WELL NAME & NO.: _____ PROSPECT/LEASE NO.: _____

LOCATION : Michigan Basin FIELD : _____

COUNTY : _____ STATE : Michigan PTD: 3000'

REQUESTED BY: _____ PREPARED BY: _____

OBJECTIVE : Drill and complete a Class I Hazardous Waste Disposal Well
Mt. Simon Formation

171	172	INTANGIBLE EXPENSES	DRY HOLE		TOTAL
006		DAMAGES, RIGHT OF WAY, PERMIT	$ 8,000	$ -0-	$ 8,000
011		CONDUCTOR PIPE SERVICES	3,500	-0-	3,500
005		LOCATION, ROAD WORK & CLEAN UP	25,000	6,000	31,000
002		MOBILIZATION/ DEMOBILIZATION, etc.	15,000	-0-	15,000
001		DRILLING RIG – DAYWORK	243,000	4,500	247,500
001		– FOOTAGE	-0-	-0-	-0-
001		– TURNKEY	-0-	-0-	-0-
	101	COMPLETION RIG	-0-	22,000	22,000
003		FUEL	Contractor	Contractor	-0-
004		WATER	9,000	1,500	10,500
007		DRILLING FLUIDS	55,000	3,600	58,600
009		BITS, COREHEAD, DRLG. TOOLS	59,640	500	60,140
010	103	RENTALS	8,250	7,000	15,250
012	102	CEMENTING	22,039	25,585	47,624
013	107	CONTRACT LABOR	32,650	13,500	46,150
014	105	LOGGING & PERFORATING	46,000	13,000	59,000
015	110	SUPERVISION & OVERHEAD	4,600	1,000	5,600
024	114	TRANSPORTATION	4,500	3,500	8,000
026	104	SPECIAL SERVICES (DST's, etc.)	11,400	-0-	11,400
016	111	MISCELLANEOUS	55,000	12,500	67,500
025		PLUG & ABANDONMENT (10%)	N/A	-0-	-0-
	106	STIMULATION		20,000	20,000
	108	NON-CONTROLLED EQUIPMENT		-0-	-0-
TOTAL INTANGIBLE EXPENSES			$ 602,579	$ 134,185	$ 736,764

	TANGIBLE EXPENSES	DRY HOLE	COMPLETION	TOTAL
	CONDUCTOR CSG.	$ 1,000		$ 1,000
	SURFACE CSG.	6,978		6,978
	INTERMEDIATE CSG.	64,290		64,290
	WELLHEAD	4,500	7,500	12,000
	PRODUCTION CSG.		115,840	115,840
	LINER		13,629	13,629
	TUBING		76,769	76,769
	DOWNHOLE EQUIPMENT	-0-	3,000	3,000
	ARTIFICIAL LIFT		-0-	-0-
	PRODUCTION FACILITIES		-0-	-0-
	MISCELLANEOUS	-0-	-0-	-0-
TOTAL TANGIBLE EXPENSES		$ 76,768	$ 216,738	$ 293,506
TOTAL WELL COST ESTIMATE		[illegible]	[illegible]	[illegible]

DATE: 1/29/87

AUTHORIZATION FOR EXPENDITURE

AFE NO.:

WELL NAME & NO.:
PROSPECT/LEASE NO.:
LOCATION: Illinois Basin
FIELD:
COUNTY:
STATE: Indiana
PTD: 10,000'
REQUESTED BY:
PREPARED BY:
OBJECTIVE: Drill & complete a Class I Hazardous Waste Disposal Well
Mt. Simon Formation

171	172	INTANGIBLE EXPENSES	DRY HOLE		TOTAL
006		DAMAGES, RIGHT OF WAY, PERMIT	$ 3,500	$ -0-	$ 3,500
011		CONDUCTOR PIPE SERVICES	3,500	-0-	3,500
005		LOCATION, ROAD WORK & CLEAN UP	30,000	8,000	38,000
002		MOBILIZATION/DEMOBILIZATION, etc.	10,000	-0-	10,000
001		DRILLING RIG – DAYWORK	278,400	4,800	283,200
001		– FOOTAGE	-0-	-0-	-0-
001		– TURNKEY	-0-	-0-	-0-
	101	COMPLETION RIG	-0-	24,200	24,200
003		FUEL	Contractor	Contractor	-0-
004		WATER	9,500	1,500	11,000
007		DRILLING FLUIDS	36,500	4,500	41,000
009		BITS, COREHEAD, DRLG. TOOLS	61,390	500	61,890
010	103	RENTALS	20,650	7,150	27,800
012	102	CEMENTING	21,834	40,438	62,272
013	107	CONTRACT LABOR	33,550	15,150	48,700
014	105	LOGGING & PERFORATING	54,500	23,000	77,500
015	110	SUPERVISION & OVERHEAD	6,250	1,000	7,250
024	114	TRANSPORTATION	4,850	4,000	8,850
026	104	SPECIAL SERVICES (DST's, etc.)	11,400	-0-	11,400
016	111	MISCELLANEOUS (10%)	59,000	16,000	75,000
025		PLUG & ABANDONMENT	N/A	-0-	-0-
	106	STIMULATION		22,000	22,000
	108	NON-CONTROLLED EQUIPMENT		-0-	-0-
TOTAL INTANGIBLE EXPENSES			$ 644,824	$ 172,238	$ 817,062

	TANGIBLE EXPENSES	DRY HOLE	COMPLETION	TOTAL
	CONDUCTOR CSG.	$ 1,000		$ 1,000
	SURFACE CSG.	6,978		6,978
	INTERMEDIATE CSG.	53,575		53,575
	WELLHEAD	4,500	8,000	12,500
	PRODUCTION CSG.		144,800	144,800
	LINER		21,243	21,243
	TUBING		96,709	96,709
	DOWNHOLE EQUIPMENT	-0-	3,000	3,000
	ARTIFICIAL LIFT		-0-	-0-
	PRODUCTION FACILITIES		-0-	-0-
	MISCELLANEOUS	-0-	-0-	-0-
TOTAL TANGIBLE EXPENSES		$ 66,053	$ 273,752	$ 339,805
TOTAL WELL COST ESTIMATE				

DATE : 1/27/87

AUTHORIZATION FOR EXPENDITURE

AFE NO.: _____

WELL NAME & NO.: _____ PROSPECT/LEASE NO.: _____

LOCATION : Williston Basin FIELD : _____

COUNTY : _____ STATE : North Dakota PTD: 9000'

REQUESTED BY: _____ PREPARED BY: _____

OBJECTIVE : Drill and complete a Class I Hazardous Waste Disposal Well; 1000' below top of Fox Hills Formation (Dakota)

171	172	INTANGIBLE EXPENSES	DRY HOLE	COMPLETION	TOTAL
006		DAMAGES, RIGHT OF WAY, PERMIT	$ 6,000	$ -0-	$ 6,000
011		CONDUCTOR PIPE SERVICES	Contractor	-0-	-0-
005		LOCATION, ROAD WORK & CLEAN UP	18,000	8,500	26,500
002		MOBILIZATION/ DEMOBILIZATION, etc.	Contractor	-0-	-0-
001		DRILLING RIG – DAYWORK	56,000	4,000	60,000
001		– FOOTAGE	112,500	-0-	112,500
001		Boiler ~~XXXXXXXXX~~	5,800	200	6,000
	101	COMPLETION RIG	-0-	18,000	18,000
003		FUEL	Contractor	-0-	-0-
004		WATER	9,500	1,500	11,000
007		DRILLING FLUIDS	30,000	4,000	34,000
009		BITS, COREHEAD, DRLG. TOOLS	10,500	500	11,000
010	103	RENTALS	10,450	6,500	16,950
012	102	CEMENTING	40,623	30,032	70,655
013	107	CONTRACT LABOR	27,400	13,650	41,050
014	105	LOGGING & PERFORATING	62,510	20,886	83,396
015	110	SUPERVISION & OVERHEAD	2,700	1,000	3,700
024	114	TRANSPORTATION	3,450	3,150	6,600
026	104	SPECIAL SERVICES (DST's, etc.)	11,400	-0-	11,400
016	111	MISCELLANEOUS (10%)	41,000	13,200	54,200
025		PLUG & ABANDONMENT	N/A	-0-	-0-
	106	STIMULATION		20,000	20,000
	108	NON-CONTROLLED EQUIPMENT		-0-	-0-
TOTAL INTANGIBLE EXPENSES			$ 447,833	$ 145,118	$ 592,951

	TANGIBLE EXPENSES	DRY HOLE	COMPLETION	TOTAL
	CONDUCTOR CSG.	Contractor		Contractor
	SURFACE CSG.	$ 7,410		$ 7,410
	INTERMEDIATE CSG.	174,960		174,960
	WELLHEAD	4,500	7,500	12,000
	PRODUCTION CSG.		131,850	131,850
	LINER		19,053	19,053
	TUBING		87,000	87,000
	DOWNHOLE EQUIPMENT	-0-	3,000	3,000
	ARTIFICIAL LIFT		-0-	-0-
	PRODUCTION FACILITIES		-0-	-0-
	MISCELLANEOUS	-0-	-0-	-0-
TOTAL TANGIBLE EXPENSES		$ 186,600	$ 248,403	$ 435,003
TOTAL WELL COST ESTIMATE		$ 634,433	$ 393,521	$ 1,027,954

DATE : 1/29/87

AUTHORIZATION FOR EXPENDITURE

AFE NO.: _____

WELL NAME & NO.: _____ PROSPECT/LEASE NO.: _____

LOCATION : Hugoton Basin FIELD : Hugoton

COUNTY : _____ STATE : Kansas PTD: 6500'

REQUESTED BY: _____ PREPARED BY: _____

OBJECTIVE : Drill and complete a Class I Hazardous Waste Disposal Well; Arbuckle Formation

171	172	INTANGIBLE EXPENSES	DRY HOLE		TOTAL
006		DAMAGES, RIGHT OF WAY, PERMIT	$ 6,000	$ -0-	$ 6,000
011		CONDUCTOR PIPE SERVICES	N/A	-0-	-0-
005		LOCATION, ROAD WORK & CLEAN UP	4,000	3,000	7,000
002		MOBILIZATION/DEMOBILIZATION, etc.	9,000	-0-	9,000
001		DRILLING RIG – DAYWORK	96,250	3,850	100,100
001		– FOOTAGE	-0-	-0-	-0-
001		– TURNKEY	-0-	-0-	-0-
	101	COMPLETION RIG	-0-	18,500	18,500
003		FUEL	Contractor	Contractor	-0-
004		WATER	3,700	1,000	4,700
007		DRILLING FLUIDS	19,000	3,000	22,000
009		BITS, COREHEAD, DRLG. TOOLS	26,340	500	26,840
010	103	RENTALS	2,600	5,500	8,100
012	102	CEMENTING	14,549	17,913	32,462
013	107	CONTRACT LABOR	18,650	11,175	29,825
014	105	LOGGING & PERFORATING	39,000	13,000	52,000
015	110	SUPERVISION & OVERHEAD	2,250	800	3,050
024	114	TRANSPORTATION	2,500	2,500	5,000
026	104	SPECIAL SERVICES (DST's, etc.)	11,400	-0-	11,400
016	111	MISCELLANEOUS (10%)	26,000	10,500	36,500
025		PLUG & ABANDONMENT	-0-	-0-	-0-
	106	STIMULATION		15,000	15,000
	108	NON-CONTROLLED EQUIPMENT		-0-	-0-
TOTAL INTANGIBLE EXPENSES			$ 281,239	$ 111,238	$ 392,477

	TANGIBLE EXPENSES	DRY HOLE	COMPLETION	TOTAL
	CONDUCTOR CSG.	N/A		$ -0-
	SURFACE CSG.	6,813		6,813
	INTERMEDIATE CSG.	16,742		16,742
	WELLHEAD	4,500	7,000	11,500
	PRODUCTION CSG.		93,015	93,015
	LINER		10,044	10,044
	TUBING		61,504	61,504
	DOWNHOLE EQUIPMENT	-0-	3,000	3,000
	ARTIFICIAL LIFT		-0-	-0-
	PRODUCTION FACILITIES		-0-	-0-
	MISCELLANEOUS	-0-	-0-	-0-
TOTAL TANGIBLE EXPENSES		$ 28,055	$ 174,563	$ 202,618
TOTAL WELL COST ESTIMATE		$ 309,294	$ 285,801	$ 595,095

DATE : 1/27/87

AUTHORIZATION FOR EXPENDITURE

AFE NO.: _____

WELL NAME & NO.: _____ PROSPECT/LEASE NO.: _____

LOCATION : Powder River Basin FIELD : _____

COUNTY : _____ STATE : Wyoming PTD: 9000'

REQUESTED BY: _____ PREPARED BY: _____

OBJECTIVE : Drill and complete a Class I Hazardous Waste Disposal Well; 1000' below top of Buck Springs Formation

171	172	INTANGIBLE EXPENSES	DRY HOLE	COMPLETION	TOTAL
006		DAMAGES, RIGHT OF WAY, PERMIT	$ 7,500	$ -0-	$ 7,500
011		CONDUCTOR PIPE SERVICES	Contractor	-0-	-0-
005		LOCATION, ROAD WORK & CLEAN UP	10,000	5,000	15,000
002		MOBILIZATION/ DEMOBILIZATION, etc.	Contractor	-0-	-0-
001		DRILLING RIG – DAYWORK	45,500	3,500	49,000
001		– FOOTAGE	81,000	-0-	81,000
001		– TURNKEY	-0-	-0-	-0-
	101	COMPLETION RIG	-0-	17,500	17,500
003		FUEL	Contractor	-0-	-0-
004		WATER	12,000	1,500	13,500
007		DRILLING FLUIDS	20,000	4,000	24,000
009		BITS, COREHEAD, DRLG. TOOLS	10,500	500	11,000
010	103	RENTALS	9,450	6,500	16,950
012	102	CEMENTING	42,873	31,532	74,405
013	107	CONTRACT LABOR	27,310	13,650	40,960
014	105	LOGGING & PERFORATING	62,510	20,886	83,396
015	110	SUPERVISION & OVERHEAD	2,500	1,000	3,500
024	114	TRANSPORTATION	3,450	3,150	6,600
026	104	SPECIAL SERVICES (DST's, etc.)	11,400	-0-	11,400
016	111	MISCELLANEOUS (10%)	35,000	13,000	48,000
025		PLUG & ABANDONMENT	N/A	-0-	-0-
	106	STIMULATION		18,000	18,000
	108	NON-CONTROLLED EQUIPMENT		-0-	-0-
TOTAL INTANGIBLE EXPENSES			$ 380,993	$ 139,718	$ 520,711

	TANGIBLE EXPENSES	DRY HOLE	COMPLETION	TOTAL
	CONDUCTOR CSG.	Contractor		-0-
	SURFACE CSG.	$ 6,813		$ 6,813
	INTERMEDIATE CSG.	168,000		168,000
	WELLHEAD	4,500	7,500	12,000
	PRODUCTION CSG.		128,790	128,790
	LINER		16,356	16,356
	TUBING		86,304	86,304
	DOWNHOLE EQUIPMENT	-0-	3,000	3,000
	ARTIFICIAL LIFT		-0-	-0-
	PRODUCTION FACILITIES		-0-	-0-
	MISCELLANEOUS	-0-	-0-	-0-
TOTAL TANGIBLE EXPENSES		$ 179,313	$ 241,950	$ 421,263
TOTAL WELL COST ESTIMATE		$ 560,306	[illegible]	

DATE: 1/28/87

AUTHORIZATION FOR EXPENDITURE

AFE NO.:

WELL NAME & NO.:

PROSPECT/LEASE NO.:

LOCATION: Permian Basin

FIELD:

COUNTY:

STATE: Texas PTD: 7000'

REQUESTED BY:

PREPARED BY:

OBJECTIVE: Drill & complete a Class I Hazardous Waste Disposal Well; 1000' below top of San Andreas

171	172	INTANGIBLE EXPENSES	DRY HOLE		TOTAL
006		DAMAGES, RIGHT OF WAY, PERMIT	$ 5,500	$ -0-	$ 5,500
011		CONDUCTOR PIPE SERVICES	3,500	-0-	3,500
005		LOCATION, ROAD WORK & CLEAN UP	10,000	5,000	15,000
002		MOBILIZATION/DEMOBILIZATION, etc.	15,000	-0-	15,000
001		DRILLING RIG – DAYWORK	148,500	4,500	153,000
001		– FOOTAGE	-0-	-0-	-0-
001		– TURNKEY	-0-	-0-	-0-
	101	COMPLETION RIG	-0-	17,550	17,550
003		FUEL	Contractor	Contractor	-0-
004		WATER	9,000	1,500	10,500
007		DRILLING FLUIDS	40,000	3,200	43,200
009		BITS, COREHEAD, DRLG. TOOLS	39,840	500	40,340
010	103	RENTALS	3,400	5,500	8,900
012	102	CEMENTING	37,736	23,733	61,469
013	107	CONTRACT LABOR	27,520	12,000	39,520
014	105	LOGGING & PERFORATING	49,700	14,400	64,100
015	110	SUPERVISION & OVERHEAD	2,850	800	3,380
024	114	TRANSPORTATION	3,450	3,150	6,600
026	104	SPECIAL SERVICES (DST's, etc.)	11,400	-0-	11,400
016	111	MISCELLANEOUS (10%)	41,000	11,000	52,000
025		PLUG & ABANDONMENT	N/A	-0-	-0-
	106	STIMULATION		18,000	18,000
	108	NON-CONTROLLED EQUIPMENT		-0-	-0-
TOTAL INTANGIBLE EXPENSES			$ 448,396	$ 120,833	$ 569,229

	TANGIBLE EXPENSES	DRY HOLE	COMPLETION	TOTAL
	CONDUCTOR CSG.	$ 1,000	$ -0-	$ 1,000
	SURFACE CSG.	6,732		6,732
	INTERMEDIATE CSG.	124,680		124,680
	WELLHEAD	4,500	7,000	11,500
	PRODUCTION CSG.		99,610	99,610
	LINER		14,673	14,673
	TUBING		66,330	66,330
	DOWNHOLE EQUIPMENT	-0-	3,000	3,000
	ARTIFICIAL LIFT		-0-	-0-
	PRODUCTION FACILITIES		-0-	-0-
	MISCELLANEOUS	-0-	-0-	-0-
TOTAL TANGIBLE EXPENSES		$ 136,912	$ 190,613	$ 327,525
TOTAL WELL COST ESTIMATE		$ 585,308	$ 311,446	$ 896,754

DATE: 2/2/87

AUTHORIZATION FOR EXPENDITURE

AFE NO.: _____

WELL NAME & NO.: _____ PROSPECT/LEASE NO.: _____

LOCATION: Anadarko Basin FIELD: _____

COUNTY: _____ STATE: Oklahoma PTD: 16,000'

REQUESTED BY: _____ PREPARED BY: _____

OBJECTIVE: Drill & complete a Class I Hazardous Waste Disposal Well; 1000' below top of Mississippi Formation

171	172	INTANGIBLE EXPENSES	DRY HOLE	COMPLETION	TOTAL
006		DAMAGES, RIGHT OF WAY, PERMIT	$ 7,500	$ -0-	$ 7,500
011		CONDUCTOR PIPE SERVICES	6,500	-0-	6,500
005		LOCATION, ROAD WORK & CLEAN UP	30,000	10,000	40,000
002		MOBILIZATION/DEMOBILIZATION, etc.	50,000	-0-	50,000
001		DRILLING RIG – DAYWORK	1,357,200	32,625	1,389,825
001		– FOOTAGE	-0-	-0-	-0-
001		– TURNKEY	-0-	-0-	-0-
	101	COMPLETION RIG	-0-	51,700	51,700
003		FUEL	312,000	7,500	319,500
004		WATER	48,000	4,500	52,500
007		DRILLING FLUIDS	344,000	7,500	351,500
009		BITS, COREHEAD, DRLG. TOOLS	401,200	2,000	403,200
010	103	RENTALS	340,000	20,000	360,000
012	102	CEMENTING	210,000	60,000	270,000
013	107	CONTRACT LABOR	200,800	33,000	233,800
014	105	LOGGING & PERFORATING	115,740	37,900	153,640
015	110	SUPERVISION & OVERHEAD	26,600	1,700	28,300
024	114	TRANSPORTATION	25,000	6,000	31,000
026	104	SPECIAL SERVICES (DST's, etc.)	16,500	-0-	16,500
016	111	MISCELLANEOUS	350,000	32,000	382,000
025		PLUG & ABANDONMENT	N/A	-0-	-0-
	106	STIMULATION		45,000	45,000
	108	NON-CONTROLLED EQUIPMENT		-0-	-0-
TOTAL INTANGIBLE EXPENSES			$3,841,040	$ 351,425	$4,192,465

	TANGIBLE EXPENSES	DRY HOLE	COMPLETION	TOTAL
	CONDUCTOR CSG.	$ 3,000		$ 3,000
	SURFACE CSG.	57,190		57,190
	INTERMEDIATE CSG.	109,440		109,440
	WELLHEAD	8,000	15,000	23,000
	PRODUCTION CSG.		259,440	259,440
	LINER		34,383	34,383
	TUBING		170,188	170,188
	DOWNHOLE EQUIPMENT	-0-	4,500	4,500
	ARTIFICIAL LIFT	472,350	-0-	472,350
	PRODUCTION FACILITIES	-0-	-0-	-0-
	MISCELLANEOUS	-0-	-0-	-0-
TOTAL TANGIBLE EXPENSES		$ 649,980	$ 483,511	$1,133,491
TOTAL WELL COST ESTIMATE		$4,491,020	$ 834,936	[illegible]

DATE : 1/28/87

AUTHORIZATION FOR EXPENDITURE

AFE NO. :

WELL NAME & NO. :

PROSPECT/LEASE NO. :

LOCATION : Gulf Coast (LA - TX)

FIELD :

COUNTY :

STATE : LA. - Texas

PTD :

REQUESTED BY :

PREPARED BY :

OBJECTIVE : Drill and complete a Class I Hazardous Waste Disposal Well; 1000' below top of Frio Formation.

171	172	INTANGIBLE EXPENSES	DRY HOLE		TOTAL
006		DAMAGES, RIGHT OF WAY, PERMIT	$ 6,000	$ -0-	$ 6,000
011		CONDUCTOR PIPE SERVICES	3,500	-0-	3,500
005		LOCATION, ROAD WORK & CLEAN UP	10,000	5,000	15,000
002		MOBILIZATION/ DEMOBILIZATION, etc.	15,000	-0-	15,000
001		DRILLING RIG – DAYWORK	132,000	4,000	136,000
001		– FOOTAGE	-0-	-0-	-0-
001		– TURNKEY	-0-	-0-	-0-
	101	COMPLETION RIG	-0-	19,000	19,000
003		FUEL	Contractor	Contractor	-0-
004		WATER	7,500	1,500	9,000.
007		DRILLING FLUIDS	35,000	3,600	38,600
009		BITS, COREHEAD, DRLG. TOOLS	31,540	500	32,040
010	103	RENTALS	9,900	6,500	16,400
012	102	CEMENTING	37,560	22,610	60,170
013	107	CONTRACT LABOR	27,290	13,000	40,290
014	105	LOGGING & PERFORATING	54,770	18,440	73,210
015	110	SUPERVISION & OVERHEAD	2,850	1,000	3,850
024	114	TRANSPORTATION	3,450	3,150	6,600
026	104	SPECIAL SERVICES (DST's, etc.)	11,400	-0-	11,400
016	111	MISCELLANEOUS (10%)	39,000	12,000	51,000
025		PLUG & ABANDONMENT	N/A	-0-	-0-
	106	STIMULATION		20,000	20,000
	108	NON-CONTROLLED EQUIPMENT		-0-	-0-
TOTAL INTANGIBLE EXPENSES			$426,760	$130,300	$557,060

	TANGIBLE EXPENSES	DRY HOLE	COMPLETION	TOTAL
	CONDUCTOR CSG.	$ 1,000		$ 1,000
	SURFACE CSG.	6,813		6,813
	INTERMEDIATE CSG.	147,000		147,000
	WELLHEAD	4,500	7,000	11,500
	PRODUCTION CSG.		114,480	114,480
	LINER		16,683	16,863
	TUBING		76,384	76,384
	DOWNHOLE EQUIPMENT	-0-	3,000	3,000
	ARTIFICIAL LIFT		-0-	-0-
	PRODUCTION FACILITIES		-0-	-0-
	MISCELLANEOUS	-0-	-0-	-0-
TOTAL TANGIBLE EXPENSES		$159,313	$217,727	$377,040
TOTAL WELL COST ESTIMATE		$586,073	$348,027	$934,100

DATE : 1/28/87

AUTHORIZATION FOR EXPENDITURE

AFE NO. :

WELL NAME & NO.: PROSPECT/LEASE NO.:

LOCATION : San Juan Basin FIELD :

COUNTY : STATE : New Mexico PTD: 9000'

REQUESTED BY: PREPARED BY:

OBJECTIVE : Drill and complete a Class I Hazardous Waste Disposal Well; 1000' below top of Glorieta Formation

171	172	INTANGIBLE EXPENSES	DRY HOLE	COMPLETION	TOTAL
006		DAMAGES, RIGHT OF WAY, PERMIT	$ 4,500	$ -0-	$ 4,500
011		CONDUCTOR PIPE SERVICES	N/A	-0-	-0-
005		LOCATION, ROAD WORK & CLEAN UP	10,000	5,000	15,000
002		MOBILIZATION/ DEMOBILIZATION, etc.	16,000	-0-	16,000
001		DRILLING RIG – DAYWORK	119,000	3,500	122,500
001		– FOOTAGE	-0-	-0-	-0-
001		– TURNKEY	-0-	-0-	-0-
	101	COMPLETION RIG	-0-	17,000	17,000
003		FUEL	Contractor	Contractor	-0-
004		WATER	15,000	2,000	17,000
007		DRILLING FLUIDS	45,000	4,000	49,000
009		BITS, COREHEAD, DRLG. TOOLS	50,140	500	50,640
010	103	RENTALS	12,250	6,500	18,750
012	102	CEMENTING	42,873	31,532	74,405
013	107	CONTRACT LABOR	29,110	13,650	42,760
014	105	LOGGING & PERFORATING	62,510	20,886	83,396
015	110	SUPERVISION & OVERHEAD	2,950	1,000	3,950
024	114	TRANSPORTATION	3,450	3,150	6,600
026	104	SPECIAL SERVICES (DST's, etc.)	11,400	-0-	11,400
016	111	MISCELLANEOUS (10%)	42,500	13,000	55,500
025		PLUG & ABANDONMENT	N/A	-0-	-0-
	106	STIMULATION		20,000	20,000
	108	NON-CONTROLLED EQUIPMENT		-0-	-0-
TOTAL INTANGIBLE EXPENSES			$ 466,683	$ 141,718	$ 608,401

	TANGIBLE EXPENSES	DRY HOLE	COMPLETION	TOTAL
	CONDUCTOR CSG.	N/A		-0-
	SURFACE CSG.	6,813		6,813
	INTERMEDIATE CSG.	168,000		168,000
	WELLHEAD	4,500	7,500	12,000
	PRODUCTION CSG.		128.790	128,790
	PACKER		16,356	16,356
	TUBING		86,304	86,304
	DOWNHOLE EQUIPMENT	-0-	3,000	3,000
	ARTIFICIAL LIFT		-0-	-0-
	PRODUCTION FACILITIES		-0-	-0-
	MISCELLANEOUS	-0-	-0-	-0-
TOTAL TANGIBLE EXPENSES		$ 179,313	$ 241,950	$ 421,263
TOTAL WELL COST ESTIMATE		[illegible]	[illegible]	[illegible]

DATE: 1/28/87

AUTHORIZATION FOR EXPENDITURE

AFE NO.:

WELL NAME & NO.:
PROSPECT/LEASE NO.:
LOCATION: Denver Julesburg Basin
FIELD:
COUNTY:
STATE: Colorado PTD: 9000'
REQUESTED BY:
PREPARED BY:
OBJECTIVE: Drill and complete a Class I Hazardous Waste Disposal Well; 1000' below top Dakota Formation

171	172	INTANGIBLE EXPENSES	DRY HOLE	COMPLETION	TOTAL
006		DAMAGES, RIGHT OF WAY, PERMIT	$ 4,000	$ -0-	$ 4,000
011		CONDUCTOR PIPE SERVICES	N/A	-0-	-0-
005		LOCATION, ROAD WORK & CLEAN UP	5,000	4,000	9,000
002		MOBILIZATION/DEMOBILIZATION, etc.	10,000	-0-	10,000
001		DRILLING RIG – DAYWORK	101,500	3,500	105,000
001		– FOOTAGE	-0-	-0-	-0-
001		– TURNKEY	-0-	-0-	-0-
	101	COMPLETION RIG	-0-	16,500	16,500
003		FUEL	Contractor	Contractor	-0-
004		WATER	7,000	1,500	8,500
007		DRILLING FLUIDS	15,000	4,000	19,000
009		BITS, COREHEAD, DRLG. TOOLS	41,590	500	42,090
010	103	RENTALS	2,900	6,500	9,400
012	102	CEMENTING	40,623	30,032	70,655
013	107	CONTRACT LABOR	25,860	13,650	39,510
014	105	LOGGING & PERFORATING	60,010	19,900	79,910
015	110	SUPERVISION & OVERHEAD	2,500	1,000	3,500
024	114	TRANSPORTATION	3,000	3,000	6,000
026	104	SPECIAL SERVICES (DST's, etc.)	11,400	-0-	11,400
016	111	MISCELLANEOUS (10%)	33,500	12,000	45,500
025		PLUG & ABANDONMENT	N/A	-0-	-0-
	106	STIMULATION		15,000	15,000
	108	NON-CONTROLLED EQUIPMENT		-0-	-0-
TOTAL INTANGIBLE EXPENSES			$ 363,883	$ 131,082	$ 494,965

	TANGIBLE EXPENSES	DRY HOLE	COMPLETION	TOTAL
	CONDUCTOR CSG.	N/A		N/A
	SURFACE CSG.	$ 6,732		$ 6,732
	INTERMEDIATE CSG.	166,240		166,240
	WELLHEAD	4,500	7,500	12,000
	PRODUCTION CSG.		128,070	128,070
	LINER		14,094	14,094
	TUBING		86,130	86,130
	DOWNHOLE EQUIPMENT	-0-	3,000	3,000
	ARTIFICIAL LIFT		-0-	-0-
	PRODUCTION FACILITIES		-0-	-0-
	MISCELLANEOUS	-0-	-0-	-0-
TOTAL TANGIBLE EXPENSES		$ 177,472	$ 238,794	$ 416,266

TOTAL WELL COST ESTIMATE

DATE : 1/29/87

AUTHORIZATION FOR EXPENDITURE

AFE NO.: _____

WELL NAME & NO.: _____ PROSPECT/LEASE NO.: _____

LOCATION : San Joaquin Basin FIELD : _____

COUNTY : San Joaquin Valley STATE : California PTD: 3500'

REQUESTED BY: _____ PREPARED BY: _____

OBJECTIVE : Drill and complete a Class I Hazardous Waste Disposal Well; 1000' below top of Etchegoin Formation

171	172	INTANGIBLE EXPENSES	DRY HOLE	COMPLETION	TOTAL
006		DAMAGES, RIGHT OF WAY, PERMIT	$ 10,000	$ -0-	$ 10,000
011		CONDUCTOR PIPE SERVICES	3,500	-0-	3,500
005		LOCATION, ROAD WORK & CLEAN UP	10,000	7,000	17,000
002		MOBILIZATION/ DEMOBILIZATION, etc.	18,000	-0-	18,000
001		DRILLING RIG – DAYWORK	129,600	5,400	135,000
001		– FOOTAGE	-0-	-0-	-0-
001		– TURNKEY	-0-	-0-	-0-
	101	COMPLETION RIG	-0-	17,600	17,600
003		FUEL	Contractor	Contractor	-0-
004		WATER	6,500	1,500	8,000
007		DRILLING FLUIDS	40,000	1,800	41,800
009		BITS, COREHEAD, DRLG. TOOLS	41,340	500	41,840
010	103	RENTALS	7,500	5,500	13,000
012	102	CEMENTING	22,824	16,276	39,100
013	107	CONTRACT LABOR	19,925	9,875	29,800
014	105	LOGGING & PERFORATING	32,000	10,000	42,000
015	110	SUPERVISION & OVERHEAD	2,100	700	2,800
024	114	TRANSPORTATION	3,450	3,150	6,600
026	104	SPECIAL SERVICES (DST's, etc.)	11,400	-0-	11,400
016	111	MISCELLANEOUS (10%)	36,000	10,000	46,000
025		PLUG & ABANDONMENT	N/A	-0-	-0-
	106	STIMULATION		18,000	18,000
	108	NON-CONTROLLED EQUIPMENT		-0-	-0-
TOTAL INTANGIBLE EXPENSES			$ 394,139	$ 107,301	$ 501,440

	TANGIBLE EXPENSES	DRY HOLE	COMPLETION	TOTAL
	CONDUCTOR CSG.	$ 1,000		$ 1,000
	SURFACE CSG.	7,059		7,059
	INTERMEDIATE CSG.	39,400		39,400
	WELLHEAD	4,500	7,000	11,500
	PRODUCTION CSG.		50,995	50,995
	LINER		5,346	5,346
	TUBING		32,967	32,967
	DOWNHOLE EQUIPMENT	-0-	3,000	3,000
	ARTIFICIAL LIFT		-0-	-0-
	PRODUCTION FACILITIES		-0-	-0-
	MISCELLANEOUS	-0-	-0-	-0-
TOTAL TANGIBLE EXPENSES		$ 51,959	$ 99,308	$ 151,267
TOTAL WELL COST ESTIMATE				

DATE : 1/30/87

AUTHORIZATION FOR EXPENDITURE

AFE NO.: _____

WELL NAME & NO.: _____ PROSPECT/LEASE NO.: _____

LOCATION : North Slope FIELD : Prudhoe Bay

COUNTY : _____ STATE : Alaska PTD: 4,000'

REQUESTED BY: _____ PREPARED BY: _____

OBJECTIVE : Drill & complete a Class I: Hazardous Wastes Disposal Well; 1,000' below top of Prince Creek/Schroder Formation

171	172	INTANGIBLE EXPENSES	DRY HOLE	COMPLETION	TOTAL
006		DAMAGES, RIGHT OF WAY, PERMIT	$ 3,000	$ -0-	$ 3,000
011		CONDUCTOR PIPE SERVICES	19,500	-0-	19,500
005		LOCATION, ROAD WORK & CLEAN UP	150,000	70,000	220,000
002		MOBILIZATION/ DEMOBILIZATION, etc.	431,000	-0-	431,000
001		DRILLING RIG – DAYWORK	585,000	-0-	585,000
001		– FOOTAGE	-0-	-0-	-0-
001		CAMP – ~~XXXXXX~~ @4,500	135,000	36,000	171,000
	101	COMPLETION RIG 8 @ 19,500	-0-	156,000	156,000
003		FUEL	75,000	20,000	95,000
004		WATER	22,500	8,000	30,500
007		DRILLING FLUIDS	80,000	7,500	87,500
009		BITS, COREHEAD, DRLG. TOOLS	90,000	2,000	92,000
010	103	RENTALS	60,000	15,500	75,500
012	102	CEMENTING	86,000	52,000	138,000
013	107	CONTRACT LABOR	31,500	8,400	39,900
014	105	LOGGING & PERFORATING	100,000	40,000	140,000
015	110	SUPERVISION & OVERHEAD	12,000	5,400	17,400
024	114	TRANSPORTATION	70,000	20,000	90,000
026	104	SPECIAL SERVICES (DST's, etc.)	45,000	-0-	45,000
016	111	MISCELLANEOUS (10%)	200,000	25,300	225,300
025		PLUG & ABANDONMENT	-0-	-0-	-0-
	106	STIMULATION		65,000	65,000
	108	NON-CONTROLLED EQUIPMENT		-0-	-0-
TOTAL INTANGIBLE EXPENSES			$2,195,500	$ 531,100	$2,726,600

	TANGIBLE EXPENSES	DRY HOLE	COMPLETION	TOTAL
	CONDUCTOR CSG.	11,400		11,400
	SURFACE CSG.	19,284		19,284
	INTERMEDIATE CSG.	129,000		129,000
	WELLHEAD	10,000	65,000	75,000
	PRODUCTION CSG.		152,520	152,500
	~~XXXXX~~		20,165	20,165
	TUBING		94,165	94,165
	DOWNHOLE EQUIPMENT	-0-	9,000	9,000
	ARTIFICIAL LIFT		-0-	-0-
	PRODUCTION FACILITIES		-0-	-0-
	MISCELLANEOUS	-0-	-0-	-0-
TOTAL TANGIBLE EXPENSES		169,684	340,850	510,534
TOTAL WELL COST ESTIMATE		[illegible]	[illegible]	

DATE: 1/31/87

AUTHORIZATION FOR EXPENDITURE

AFE NO.:

WELL NAME & NO.: PROSPECT/LEASE NO.:

LOCATION: Appalachain Basin FIELD:

COUNTY: STATE: Pennsylvania PTD: 7,000'

REQUESTED BY: PREPARED BY:

OBJECTIVE: Convert existing 7,000' well to Disposal Well

171	172	INTANGIBLE EXPENSES	DRY HOLE	WORKOVER	TOTAL
006		DAMAGES, RIGHT OF WAY, PERMIT		$	$
011		CONDUCTOR PIPE SERVICES			
005		LOCATION, ROAD WORK & CLEAN UP		6,500	6,500
002		MOBILIZATION/DEMOBILIZATION, etc.			
001		DRILLING RIG – DAYWORK			
001		– FOOTAGE			
001		– TURNKEY			
	101	COMPLETION RIG		29,250	29,250
003		FUEL			
004		WATER		1,500	1,500
007		DRILLING FLUIDS / chemicals		3,200	3,200
009		BITS, COREHEAD, DRLG. TOOLS		1,000	1,000
010	103	RENTALS		8,200	8,200
012	102	CEMENTING		13,000	13,000
013	107	CONTRACT LABOR		9,200	9,200
014	105	LOGGING & PERFORATING		17,000	17,000
015	110	SUPERVISION & OVERHEAD		1,250	1,250
024	114	TRANSPORTATION		3,800	3,800
026	104	SPECIAL SERVICES (DST's, etc.)			
016	111	MISCELLANEOUS (10%)		11,200	11,200
025		PLUG & ABANDONMENT			
	106	STIMULATION		18,000	18,000
	108	NON-CONTROLLED EQUIPMENT			
TOTAL INTANGIBLE EXPENSES				$ 123,100	$ 123,100

	TANGIBLE EXPENSES	DRY HOLE	COMPLETION	TOTAL
	CONDUCTOR CSG.			
	SURFACE CSG.			
	INTERMEDIATE CSG.			
	WELLHEAD		3,500	3,500
	PRODUCTION CSG.			
	LINER		10,854	10,854
	TUBING		66,933	66,933
	DOWNHOLE EQUIPMENT		3,000	3,000
	ARTIFICIAL LIFT			
	PRODUCTION FACILITIES			
	MISCELLANEOUS			
TOTAL TANGIBLE EXPENSES			$ 84,287	$ 84,287
TOTAL WELL COST ESTIMATE			$ 207,387	$ 207,387

DATE : 1/31/87

AUTHORIZATION FOR EXPENDITURE

AFE NO.: _____

WELL NAME & NO.: _____ PROSPECT/LEASE NO.: _____

LOCATION : Mississippi Salt Dome FIELD : _____

COUNTY : _____ STATE : Mississippi PTD: 5000'

REQUESTED BY: _____ PREPARED BY: _____

OBJECTIVE : Convert existing 5,000' well to disposal well

171	172	INTANGIBLE EXPENSES	DRY HOLE	WORKOVER	TOTAL
006		DAMAGES, RIGHT OF WAY, PERMIT		$	$
011		CONDUCTOR PIPE SERVICES			
005		LOCATION, ROAD WORK & CLEAN UP		6,500	6,500
002		MOBILIZATION/ DEMOBILIZATION, etc.			
001		DRILLING RIG – DAYWORK			
001		– FOOTAGE			
001		– TURNKEY			
	101	COMPLETION RIG		26,600	26,600
003		FUEL			
004		WATER		1,500	1,500
007		DRILLING FLUIDS /Chemicals		2,500	2,500
009		BITS, COREHEAD, DRLG. TOOLS		1,000	1,000
010	103	RENTALS		8,000	8,000
012	102	CEMENTING		13,200	13,200
013	107	CONTRACT LABOR		8,700	8,700
014	105	LOGGING & PERFORATING		12,900	12,900
015	110	SUPERVISION & OVERHEAD		1,200	1,200
024	114	TRANSPORTATION		3,150	3,150
026	104	SPECIAL SERVICES (DST's, etc.)			
016	111	MISCELLANEOUS (10%)		10,500	10,500
025		PLUG & ABANDONMENT			
	106	STIMULATION		18,000	18,000
	108	NON-CONTROLLED EQUIPMENT			
TOTAL INTANGIBLE EXPENSES				$ 113,750	$ 113,750

	TANGIBLE EXPENSES	DRY HOLE	COMPLETION	TOTAL
	CONDUCTOR CSG.			
	SURFACE CSG.			
	INTERMEDIATE CSG.			
	WELLHEAD		3,500	3,500
	PRODUCTION CSG.			
	LINER		10,293	10,293
	TUBING		46,718	46,718
	DOWNHOLE EQUIPMENT			
	ARTIFICIAL LIFT		3,000	3,000
	PRODUCTION FACILITIES			
	MISCELLANEOUS			
TOTAL TANGIBLE EXPENSES			$ 63,511	$ 63,511
TOTAL WELL COST ESTIMATE				

DATE: 2/2/87

AUTHORIZATION FOR EXPENDITURE

AFE NO.:

WELL NAME & NO.:

PROSPECT/LEASE NO.:

LOCATION: ARK -LA. BASIN

FIELD:

COUNTY:

STATE: N. Louisiana PTD: 4,000'

REQUESTED BY:

PREPARED BY:

OBJECTIVE: Convert existing 4000' well to disposal well

171	172	INTANGIBLE EXPENSES	DRY HOLE	WORKOVER	TOTAL
006		DAMAGES, RIGHT OF WAY, PERMIT		$	$
011		CONDUCTOR PIPE SERVICES			
005		LOCATION, ROAD WORK & CLEAN UP		6,500	6,500
002		MOBILIZATION/DEMOBILIZATION, etc.			
001		DRILLING RIG – DAYWORK			
001		– FOOTAGE			
001		– TURNKEY			
	101	COMPLETION RIG		24,700	24,700
003		FUEL			
004		WATER		1,500	1,500
007		DRILLING FLUIDS /chemicals		2,000	2,000
009		BITS, COREHEAD, DRLG. TOOLS		1,000	1,000
010	103	RENTALS		7,200	7,200
012	102	CEMENTING		11,500	11,500
013	107	CONTRACT LABOR		8,000	8,000
014	105	LOGGING & PERFORATING		11,100	11,100
015	110	SUPERVISION & OVERHEAD		1,100	1,100
024	114	TRANSPORTATION		3,150	3,150
026	104	SPECIAL SERVICES (DST's, etc.)			
016	111	MISCELLANEOUS (10%)		9,600	9,600
025		PLUG & ABANDONMENT			
	106	STIMULATION		18,000	18,000
	108	NON-CONTROLLED EQUIPMENT			
TOTAL INTANGIBLE EXPENSES				$ 105,350	$ 105,350

	TANGIBLE EXPENSES	DRY HOLE	COMPLETION	TOTAL
	CONDUCTOR CSG.			
	SURFACE CSG.			
	INTERMEDIATE CSG.			
	WELLHEAD		3,500	3,500
	PRODUCTION CSG.			
	LINER		6,549	6,549
	TUBING		36,630	36,630
	DOWNHOLE EQUIPMENT		3,000	3,000
	ARTIFICIAL LIFT			
	PRODUCTION FACILITIES			
	MISCELLANEOUS			
TOTAL TANGIBLE EXPENSES			$ 49,679	$ 49,679
TOTAL WELL COST ESTIMATE				

DATE: 2/1/87

AUTHORIZATION FOR EXPENDITURE

AFE NO.:

WELL NAME & NO.:

PROSPECT/LEASE NO.:

LOCATION: Michigan Basin

FIELD:

COUNTY:

STATE: Michigan PTD: 8000'

REQUESTED BY:

PREPARED BY:

OBJECTIVE: Convert existing 8,000' well to Disposal Well

171	172	INTANGIBLE EXPENSES	DRY HOLE	WORKOVER	TOTAL
006		DAMAGES, RIGHT OF WAY, PERMIT		$	$
011		CONDUCTOR PIPE SERVICES			
005		LOCATION, ROAD WORK & CLEAN UP		6,500	6,500
002		MOBILIZATION/ DEMOBILIZATION, etc.			
001		DRILLING RIG – DAYWORK			
001		– FOOTAGE			
001		– TURNKEY			
	101	COMPLETION RIG		33,000	33,000
003		FUEL			
004		WATER		1,850	1,850
007		DRILLING FLUIDS / CHEMICALS		3,600	3,600
009		BITS, COREHEAD, DRLG. TOOLS		1,000	1,000
010	103	RENTALS		8,350	8,350
012	102	CEMENTING		13,350	13,350
013	107	CONTRACT LABOR		9,700	9,700
014	105	LOGGING & PERFORATING		18,440	18,440
015	110	SUPERVISION & OVERHEAD		1,350	1,350
024	114	TRANSPORTATION		3,800	3,800
026	104	SPECIAL SERVICES (DST's, etc.)			
016	111	MISCELLANEOUS (10%)		12,100	12,100
025		PLUG & ABANDONMENT			
	106	STIMULATION		20,000	20,000
	108	NON-CONTROLLED EQUIPMENT			
TOTAL INTANGIBLE EXPENSES				$ 133,040	$ 133,040

	TANGIBLE EXPENSES	DRY HOLE	COMPLETION	TOTAL
	CONDUCTOR CSG.			
	SURFACE CSG.			
	INTERMEDIATE CSG.			
	WELLHEAD		3,500	3,500
	PRODUCTION CSG.			
	LINER		13,629	13,629
	TUBING		76,769	76,769
	DOWNHOLE EQUIPMENT		3,000	3,000
	ARTIFICIAL LIFT			
	PRODUCTION FACILITIES			
	MISCELLANEOUS			
TOTAL TANGIBLE EXPENSES			$ 96,898	$ 96,898
TOTAL WELL COST ESTIMATE				

DATE: 2/1/87

AUTHORIZATION FOR EXPENDITURE

AFE NO.:

WELL NAME & NO.: PROSPECT/LEASE NO.:

LOCATION: Illinois Basin FIELD:

COUNTY: STATE: Indiana PTD: 10,000

REQUESTED BY: PREPARED BY:

OBJECTIVE: Convert existing 10,000' well to disposal well

171	172	INTANGIBLE EXPENSES	DRY HOLE	WORKOVER	TOTAL
006		DAMAGES, RIGHT OF WAY, PERMIT		$	$
011		CONDUCTOR PIPE SERVICES			
005		LOCATION, ROAD WORK & CLEAN UP		7,000	7,000
002		MOBILIZATION/DEMOBILIZATION, etc.			
001		DRILLING RIG – DAYWORK			
001		– FOOTAGE			
001		– TURNKEY			
	101	COMPLETION RIG		39,600	39,600
003		FUEL			
004		WATER		2,000	2,000
007		DRILLING FLUIDS / chemicals		4,500	4,500
009		BITS, COREHEAD, DRLG. TOOLS		1,000	1,000
010	103	RENTALS		9,850	9,850
012	102	CEMENTING		15,350	15,350
013	107	CONTRACT LABOR		10,650	10,650
014	105	LOGGING & PERFORATING		22,000	22,000
015	110	SUPERVISION & OVERHEAD		1,500	1,500
024	114	TRANSPORTATION		4,000	4,000
026	104	SPECIAL SERVICES (DST's, etc.)			
016	111	MISCELLANEOUS (10%)		14,000	14,000
025		PLUG & ABANDONMENT			
	106	STIMULATION		22,000	22,000
	108	NON-CONTROLLED EQUIPMENT			
TOTAL INTANGIBLE EXPENSES				$ 153,450	$ 153,450

	TANGIBLE EXPENSES	DRY HOLE	COMPLETION	TOTAL
	CONDUCTOR CSG.			
	SURFACE CSG.			
	INTERMEDIATE CSG.			
	WELLHEAD		3,700	3,700
	PRODUCTION CSG.		21,243	21,243
	LINER		96,709	96,709
	TUBING		3,000	3,000
	DOWNHOLE EQUIPMENT			
	ARTIFICIAL LIFT			
	PRODUCTION FACILITIES			
	MISCELLANEOUS			
TOTAL TANGIBLE EXPENSES			$ 124,652	$ 124,652
TOTAL WELL COST ESTIMATE			$ 278,102	$ 278,102

DATE: 2/2/87

AUTHORIZATION FOR EXPENDITURE

AFE NO.:

WELL NAME & NO.:

PROSPECT/LEASE NO.:

LOCATION: Williston Basin

FIELD:

COUNTY:

STATE: North Dakota PTD: 9,000'

REQUESTED BY:

PREPARED BY:

OBJECTIVE: Convert existing 9,000' well to Disposal Well

171	172	INTANGIBLE EXPENSES	DRY HOLE	WORKOVER	TOTAL
006		DAMAGES, RIGHT OF WAY, PERMIT		$	$
011		CONDUCTOR PIPE SERVICES			
005		LOCATION, ROAD WORK & CLEAN UP		6,500	6,500
002		MOBILIZATION/ DEMOBILIZATION, etc.			
001		DRILLING RIG – DAYWORK			
001		– FOOTAGE			
001		– TURNKEY			
	101	COMPLETION RIG		31,450	31,450
003		FUEL			
004		WATER		2,000	2,000
007		DRILLING FLUIDS /chemicals		4,000	4,000
009		BITS, COREHEAD, DRLG. TOOLS		1,000	1,000
010	103	RENTALS		9,300	9,300
012	102	CEMENTING		15,350	15,350
013	107	CONTRACT LABOR		10,300	10,300
014	105	LOGGING & PERFORATING		20,400	20,400
015	110	SUPERVISION & OVERHEAD		1,350	1,350
024	114	TRANSPORTATION		3,150	3,150
026	104	SPECIAL SERVICES (DST's, etc.)			
016	111	MISCELLANEOUS (10%)		15,000	15,000
025		PLUG & ABANDONMENT			
	106	STIMULATION		20,000	20,000
	108	NON-CONTROLLED EQUIPMENT			
TOTAL INTANGIBLE EXPENSES				$ 139,800	$ 139,800

	TANGIBLE EXPENSES	DRY HOLE	COMPLETION	TOTAL
	CONDUCTOR CSG.			
	SURFACE CSG.			
	INTERMEDIATE CSG.			
	WELLHEAD		3,500	3,500
	PRODUCTION CSG.			
	LINER		19,053	19,053
	TUBING		87,000	87,000
	DOWNHOLE EQUIPMENT		3,000	3,000
	ARTIFICIAL LIFT			
	PRODUCTION FACILITIES			
	MISCELLANEOUS			
TOTAL TANGIBLE EXPENSES			$ 112,553	$ 112,553
TOTAL WELL COST ESTIMATE			$ [illegible]	$ [illegible]

DATE : 1/31/87

AUTHORIZATION FOR EXPENDITURE

AFE NO.: _____

WELL NAME & NO.: _____ PROSPECT/LEASE NO.: _____

LOCATION : Hugoton Basin FIELD : Hugoton

COUNTY : _____ STATE : Kansas PTD: 6,500'

REQUESTED BY: _____ PREPARED BY: _____

OBJECTIVE : Convert existing 6,500' well to Disposal well.

171	172	INTANGIBLE EXPENSES	DRY HOLE	WORKOVER	TOTAL
006		DAMAGES, RIGHT OF WAY, PERMIT		$	$
011		CONDUCTOR PIPE SERVICES			
005		LOCATION, ROAD WORK & CLEAN UP		4,500	4,500
002		MOBILIZATION/ DEMOBILIZATION, etc.			
001		DRILLING RIG – DAYWORK			
001		– FOOTAGE			
001		– TURNKEY			
	101	COMPLETION RIG		26,600	26,600
003		FUEL			
004		WATER		1,000	1,000
007		DRILLING FLUIDS/Chemicals		3,000	3,000
009		BITS, COREHEAD, DRLG. TOOLS		1,000	1,000
010	103	RENTALS		7,700	7,700
012	102	CEMENTING		13,000	13,000
013	107	CONTRACT LABOR		8,500	8,500
014	105	LOGGING & PERFORATING		15,350	15,350
015	110	SUPERVISION & OVERHEAD		1,200	1,200
024	114	TRANSPORTATION		2,500	2,500
026	104	SPECIAL SERVICES (DST's, etc.)			
016	111	MISCELLANEOUS (10%)		9,950	9,950
025		PLUG & ABANDONMENT			
	106	STIMULATION		15,000	15,000
	108	NON-CONTROLLED EQUIPMENT			
TOTAL INTANGIBLE EXPENSES				$ 109,300	$ 109,300

	TANGIBLE EXPENSES	DRY HOLE	COMPLETION	TOTAL
	CONDUCTOR CSG.			
	SURFACE CSG.			
	INTERMEDIATE CSG.			
	WELLHEAD		3,500	3,500
	PRODUCTION CSG.			
	LINER		10,044	10,044
	TUBING		61,504	61,504
	DOWNHOLE EQUIPMENT		3,000	3,000
	ARTIFICIAL LIFT			
	PRODUCTION FACILITIES			
	MISCELLANEOUS			
TOTAL TANGIBLE EXPENSES			$ 78,048	$ 78,048
TOTAL WELL COST ESTIMATE			[illegible]	

DATE : 2/1/87

AUTHORIZATION FOR EXPENDITURE

AFE NO. :

WELL NAME & NO. :

PROSPECT/LEASE NO. :

LOCATION : Permian Basin

FIELD :

COUNTY :

STATE : Texas

PTD : 7,000'

REQUESTED BY :

PREPARED BY :

OBJECTIVE : Convert existing 8,000' well to disposal well

171	172	INTANGIBLE EXPENSES	DRY HOLE	WORKOVER	TOTAL
006		DAMAGES, RIGHT OF WAY, PERMIT		$	$
011		CONDUCTOR PIPE SERVICES			
005		LOCATION, ROAD WORK & CLEAN UP		5,000	5,000
002		MOBILIZATION/DEMOBILIZATION, etc.			
001		DRILLING RIG – DAYWORK			
001		– FOOTAGE			
001		– TURNKEY			
	101	COMPLETION RIG		29,250	29,250
003		FUEL			
004		WATER		1,500	1,500
007		DRILLING FLUIDS / chemicals		3,200	3,200
009		BITS, COREHEAD, DRLG. TOOLS		1,000	1,000
010	103	RENTALS		8,200	8,200
012	102	CEMENTING		12,300	12,300
013	107	CONTRACT LABOR		9,200	9,200
014	105	LOGGING & PERFORATING		16,500	16,500
015	110	SUPERVISION & OVERHEAD		1,250	1,250
024	114	TRANSPORTATION		3,150	3,150
026	104	SPECIAL SERVICES (DST's, etc.)			
016	111	MISCELLANEOUS (10%)		10,900	10,900
025		PLUG & ABANDONMENT			
	106	STIMULATION		18,000	18,000
	108	NON-CONTROLLED EQUIPMENT			
TOTAL INTANGIBLE EXPENSES				$ 119,450	$ 119,450

	TANGIBLE EXPENSES	DRY HOLE	COMPLETION	TOTAL
	CONDUCTOR CSG.			
	SURFACE CSG.			
	INTERMEDIATE CSG.			
	WELLHEAD		3,500	3,500
	PRODUCTION CSG.			
	LINER		14,673	14,673
	TUBING		66,330	66,330
	DOWNHOLE EQUIPMENT		3,000	3,000
	ARTIFICIAL LIFT			
	PRODUCTION FACILITIES			
	MISCELLANEOUS			
TOTAL TANGIBLE EXPENSES			$ 87,503	$ 87,503
TOTAL WELL COST ESTIMATE			[illegible]	[illegible]

DATE: 2/2/87

AUTHORIZATION FOR EXPENDITURE

AFE NO.:

WELL NAME & NO.: PROSPECT/LEASE NO.:

LOCATION: Anadarko Basin FIELD:

COUNTY: STATE: Oklahoma PTD: 16,000

REQUESTED BY: PREPARED BY:

OBJECTIVE: Convert existing 16,000' well to disposal well - Class II well

171	172	INTANGIBLE EXPENSES	DRY HOLE	WORKOVER	TOTAL
006		DAMAGES, RIGHT OF WAY, PERMIT		$	$
011		CONDUCTOR PIPE SERVICES			
005		LOCATION, ROAD WORK & CLEAN UP		7,000	7,000
002		MOBILIZATION/ DEMOBILIZATION, etc.			
001		DRILLING RIG – DAYWORK			
001		– FOOTAGE			
001		– TURNKEY			
	101	COMPLETION RIG		63,450	63,450
003		FUEL			
004		WATER		4,500	4,500
007		DRILLING FLUIDS/chemicals		7,500	7,500
009		BITS, COREHEAD, DRLG. TOOLS		1,600	1,600
010	103	RENTALS		14,800	14,800
012	102	CEMENTING		24,000	24,000
013	107	CONTRACT LABOR		14,400	14,400
014	105	LOGGING & PERFORATING		36,000	36,000
015	110	SUPERVISION & OVERHEAD		2,250	2,250
024	114	TRANSPORTATION		4,000	4,000
026	104	SPECIAL SERVICES (DST's, etc.)			
016	111	MISCELLANEOUS (10%)		21,000	21,000
025		PLUG & ABANDONMENT			
	106	STIMULATION		30,000	30,000
	108	NON-CONTROLLED EQUIPMENT			
TOTAL INTANGIBLE EXPENSES				230,500	230,500

	TANGIBLE EXPENSES	DRY HOLE	COMPLETION	TOTAL
	CONDUCTOR CSG.			
	SURFACE CSG.			
	INTERMEDIATE CSG.			
	WELLHEAD		7,000	7,000
	PRODUCTION CSG.			
	LINER		34,383	34,383
	TUBING		170,188	170,188
	DOWNHOLE EQUIPMENT		4,500	4,500
	ARTIFICIAL LIFT			
	PRODUCTION FACILITIES			
	MISCELLANEOUS			
TOTAL TANGIBLE EXPENSES			$ 216,071	$ 216,071
TOTAL WELL COST ESTIMATE				

DATE: 1/31/87

AUTHORIZATION FOR EXPENDITURE

AFE NO.: _____

WELL NAME & NO.: _____ PROSPECT/LEASE NO.: _____

LOCATION: Gulf Coast (LA. - TX.) FIELD: _____

COUNTY: _____ STATE: Louisiana-Tx. PTD: 8000'

REQUESTED BY: _____ PREPARED BY: _____

OBJECTIVE: Convert existing 8000' well to disposal well

171	172	INTANGIBLE EXPENSES	DRY HOLE	WORKOVER	TOTAL
006		DAMAGES, RIGHT OF WAY, PERMIT		$	$
011		CONDUCTOR PIPE SERVICES			
005		LOCATION, ROAD WORK & CLEAN UP		6,500	6,500
002		MOBILIZATION/ DEMOBILIZATION, etc.			
001		DRILLING RIG – DAYWORK			
001		– FOOTAGE			
001		– TURNKEY			
	101	COMPLETION RIG		31,200	31,200
003		FUEL			
004		WATER		2,000	2,000
007		DRILLING FLUIDS /chemicals		3,600	3,600
009		BITS, COREHEAD, DRLG. TOOLS		1,000	1,000
010	103	RENTALS		8,350	8,350
012	102	CEMENTING		13,700	13,700
013	107	CONTRACT LABOR		9,700	9,700
014	105	LOGGING & PERFORATING		18,400	18,400
015	110	SUPERVISION & OVERHEAD		1,350	1,350
024	114	TRANSPORTATION		3,150	3,150
026	104	SPECIAL SERVICES (DST's, etc.)			
016	111	MISCELLANEOUS (10%)		12,000	12,000
025		PLUG & ABANDONMENT			
	106	STIMULATION		20,000	20,000
	108	NON-CONTROLLED EQUIPMENT			
TOTAL INTANGIBLE EXPENSES				$ 130,950	$ 130,950

	TANGIBLE EXPENSES	DRY HOLE	COMPLETION	TOTAL
	CONDUCTOR CSG.			
	SURFACE CSG.			
	INTERMEDIATE CSG.			
	WELLHEAD		3,500	3,500
	PRODUCTION CSG.			
	LINER		16,863	16,863
	TUBING		76,384	76,384
	DOWNHOLE EQUIPMENT		3,000	3,000
	ARTIFICIAL LIFT			
	PRODUCTION FACILITIES			
	MISCELLANEOUS			
TOTAL TANGIBLE EXPENSES			$ 99,747	$ 99,747
TOTAL WELL COST ESTIMATE			$ 230,697	$ 230,697

DATE: 2/1/87

AUTHORIZATION FOR EXPENDITURE

AFE NO.:

WELL NAME & NO.:
PROSPECT/LEASE NO.:
LOCATION: Powder River Basin
FIELD:
COUNTY:
STATE: Wyoming
PTD: 9,000'
REQUESTED BY:
PREPARED BY:
OBJECTIVE: Convert existing 9,000' well to Disposal Well

171	172	INTANGIBLE EXPENSES	DRY HOLE	WORKOVER	TOTAL
006		DAMAGES, RIGHT OF WAY, PERMIT		$	$
011		CONDUCTOR PIPE SERVICES			
005		LOCATION, ROAD WORK & CLEAN UP		5,000	5,000
002		MOBILIZATION/ DEMOBILIZATION, etc.			
001		DRILLING RIG – DAYWORK			
001		– FOOTAGE			
001		– TURNKEY			
	101	COMPLETION RIG		29,750	29,750
003		FUEL			
004		WATER		2,000	2,000
007		DRILLING FLUIDS /chemicals		4,000	4,000
009		BITS, COREHEAD, DRLG. TOOLS		1,000	1,000
010	103	RENTALS		9,300	9,300
012	102	CEMENTING		15,350	15,350
013	107	CONTRACT LABOR		10,300	10,300
014	105	LOGGING & PERFORATING		20,400	20,400
015	110	SUPERVISION & OVERHEAD		1,350	1,350
024	114	TRANSPORTATION		3,150	3,150
026	104	SPECIAL SERVICES (DST's, etc.)			
016	111	MISCELLANEOUS (10%)		12,000	12,000
025		PLUG & ABANDONMENT			
	106	STIMULATION		18,000	18,000
	108	NON-CONTROLLED EQUIPMENT			
TOTAL INTANGIBLE EXPENSES				$ 131,600	$ 131,600

	TANGIBLE EXPENSES	DRY HOLE	COMPLETION	TOTAL
	CONDUCTOR CSG.			
	SURFACE CSG.			
	INTERMEDIATE CSG.			
	WELLHEAD		3,500	3,500
	PRODUCTION CSG.			
	LINER		16,356	16,356
	TUBING		86,304	86,304
	DOWNHOLE EQUIPMENT		3,000	3,000
	ARTIFICIAL LIFT			
	PRODUCTION FACILITIES			
	MISCELLANEOUS			
TOTAL TANGIBLE EXPENSES			$ 109,160	$ 109,160
TOTAL WELL COST ESTIMATE				

DATE: 2/1/87

AUTHORIZATION FOR EXPENDITURE

AFE NO.:

WELL NAME & NO.:

PROSPECT/LEASE NO.:

LOCATION: San Juan Basin

FIELD:

COUNTY:

STATE: New Mexico PTD: 9,000'

REQUESTED BY:

PREPARED BY:

OBJECTIVE: Convert existing 9,000' well to Disposal Well

171	172	INTANGIBLE EXPENSES	DRY HOLE	WORKOVER	TOTAL
006		DAMAGES, RIGHT OF WAY, PERMIT		$	$
011		CONDUCTOR PIPE SERVICES			
005		LOCATION, ROAD WORK & CLEAN UP		5,000	5,000
002		MOBILIZATION/DEMOBILIZATION, etc.			
001		DRILLING RIG – DAYWORK			
001		– FOOTAGE			
001		– TURNKEY			
	101	COMPLETION RIG		28,900	28,900
003		FUEL			
004		WATER		2,500	2,500
007		DRILLING FLUIDS /chemicals		4,000	4,000
009		BITS, COREHEAD, DRLG. TOOLS		1,000	1,000
010	103	RENTALS		9,300	9,300
012	102	CEMENTING		15,350	15,350
013	107	CONTRACT LABOR		10,300	10,300
014	105	LOGGING & PERFORATING		20,400	20,400
015	110	SUPERVISION & OVERHEAD		1,350	1,350
024	114	TRANSPORTATION		3,150	3,150
026	104	SPECIAL SERVICES (DST's, etc.)			
016	111	MISCELLANEOUS (10%)		12,200	12,200
025		PLUG & ABANDONMENT			
	106	STIMULATION		20,000	20,000
	108	NON-CONTROLLED EQUIPMENT			
TOTAL INTANGIBLE EXPENSES				$ 133,450	$ 133,450

	TANGIBLE EXPENSES	DRY HOLE	COMPLETION	TOTAL
	CONDUCTOR CSG.			
	SURFACE CSG.			
	INTERMEDIATE CSG.			
	WELLHEAD		3,500	3,500
	PRODUCTION CSG.		16,356	16,356
	LINER		86,304	86,304
	TUBING		3,000	3,000
	DOWNHOLE EQUIPMENT			
	ARTIFICIAL LIFT			
	PRODUCTION FACILITIES			
	MISCELLANEOUS			
TOTAL TANGIBLE EXPENSES			$ 109,160	$ 109,160
TOTAL WELL COST ESTIMATE				

DATE: 2/1/87

AUTHORIZATION FOR EXPENDITURE

AFE NO.:

WELL NAME & NO.:

PROSPECT/LEASE NO.:

LOCATION: Denver Julesburg Basin

FIELD:

COUNTY:

STATE: Colorado

PTD: 9,000

REQUESTED BY:

PREPARED BY:

OBJECTIVE: Convert existing 9,000' well to Disposal Well

171	172	INTANGIBLE EXPENSES	DRY HOLE	WORKOVER	TOTAL
006		DAMAGES, RIGHT OF WAY, PERMIT		$	$
011		CONDUCTOR PIPE SERVICES			
005		LOCATION, ROAD WORK & CLEAN UP		5,000	5,000
002		MOBILIZATION/DEMOBILIZATION, etc.			
001		DRILLING RIG – DAYWORK			
001		– FOOTAGE			
001		– TURNKEY			
	101	COMPLETION RIG		28,050	28,050
003		FUEL			
004		WATER		1,800	1,800
007		DRILLING FLUIDS / chemicals		4,000	4,000
009		BITS, COREHEAD, DRLG. TOOLS		1,000	1,000
010	103	RENTALS		9,300	9,300
012	102	CEMENTING		15,350	15,350
013	107	CONTRACT LABOR		10,300	10,300
014	105	LOGGING & PERFORATING		20,400	20,400
015	110	SUPERVISION & OVERHEAD		1,350	1,350
024	114	TRANSPORTATION		3,000	3,000
026	104	SPECIAL SERVICES (DST's, etc.)			
016	111	MISCELLANEOUS (10%)		11,500	11,500
025		PLUG & ABANDONMENT			
	106	STIMULATION		15,000	15,000
	108	NON-CONTROLLED EQUIPMENT			
TOTAL INTANGIBLE EXPENSES				$ 126,050	$ 126,050

	TANGIBLE EXPENSES	DRY HOLE	COMPLETION	TOTAL
	CONDUCTOR CSG.			
	SURFACE CSG.			
	INTERMEDIATE CSG.			
	WELLHEAD			
	PRODUCTION CSG.		3,500	3,500
	LINER		14,094	14,094
	TUBING		86,130	86,130
	DOWNHOLE EQUIPMENT		3,000	3,000
	ARTIFICIAL LIFT			
	PRODUCTION FACILITIES			
	MISCELLANEOUS			
TOTAL TANGIBLE EXPENSES			$ 106,724	$ 106,724
TOTAL WELL COST ESTIMATE				

DATE: 2/2/87

AUTHORIZATION FOR EXPENDITURE

AFE NO.:

WELL NAME & NO.: PROSPECT/LEASE NO.:

LOCATION: San Joaquin Basin FIELD:

COUNTY: STATE: California PTD: 3,500'

REQUESTED BY: PREPARED BY:

OBJECTIVE: Convert existing 3,500' well to Disposal Well

171	172	INTANGIBLE EXPENSES	DRY HOLE	WORKOVER	TOTAL
006		DAMAGES, RIGHT OF WAY, PERMIT		$	$
011		CONDUCTOR PIPE SERVICES			
005		LOCATION, ROAD WORK & CLEAN UP		6,000	6,000
002		MOBILIZATION/DEMOBILIZATION, etc.			
001		DRILLING RIG – DAYWORK			
001		– FOOTAGE			
001		– TURNKEY			
	101	COMPLETION RIG		26,400	26,400
003		FUEL			
004		WATER		1,500	1,500
007		DRILLING FLUIDS /chemicals		1,800	1,800
009		BITS, COREHEAD, DRLG. TOOLS		1,000	1,000
010	103	RENTALS		6,600	6,600
012	102	CEMENTING		11,000	11,000
013	107	CONTRACT LABOR		7,300	7,300
014	105	LOGGING & PERFORATING		9,500	9,500
015	110	SUPERVISION & OVERHEAD		1,000	1,000
024	114	TRANSPORTATION		3,150	3,150
026	104	SPECIAL SERVICES (DST's, etc.)			
016	111	MISCELLANEOUS (10%)		9,500	9,500
025		PLUG & ABANDONMENT			
	106	STIMULATION		18,000	18,000
	108	NON-CONTROLLED EQUIPMENT			
TOTAL INTANGIBLE EXPENSES				$ 102,750	$ 102,750

	TANGIBLE EXPENSES	DRY HOLE	COMPLETION	TOTAL
	CONDUCTOR CSG.			
	SURFACE CSG.			
	INTERMEDIATE CSG.			
	WELLHEAD		3,500	3,500
	PRODUCTION CSG.			
	LINER		5,346	5,346
	TUBING		32,967	32,967
	DOWNHOLE EQUIPMENT		3,000	3,000
	ARTIFICIAL LIFT			
	PRODUCTION FACILITIES			
	MISCELLANEOUS			
TOTAL TANGIBLE EXPENSES			$ 44,813	$ 44,813
TOTAL WELL COST ESTIMATE			$ 147,563	$ 147,563

DATE: 2/3/87

AUTHORIZATION FOR EXPENDITURE

AFE NO.:

WELL NAME & NO.:

PROSPECT/LEASE NO.:

LOCATION: North Slope

FIELD: Prudhoe Bay

COUNTY:

STATE: Alaska

PTD: 4,000'

REQUESTED BY:

PREPARED BY:

OBJECTIVE: Convert existing 4,000' well to Disposal Well

171	172	INTANGIBLE EXPENSES	DRY HOLE	WORKOVER	TOTAL
006		DAMAGES, RIGHT OF WAY, PERMIT		$	$
011		CONDUCTOR PIPE SERVICES			
005		LOCATION, ROAD WORK & CLEAN UP		80,000	80,000
002		MOBILIZATION/DEMOBILIZATION, etc.		250,000	250,000
001		DRILLING RIG – DAYWORK			
001		– FOOTAGE			
001		Comp – TURNKEY @ 4500		45,000	45,000
	101	COMPLETION RIG		150,000	150,000
003		FUEL		20,000	20,000
004		WATER		15,000	15,000
007		DRILLING FLUIDS /chemicals		7,500	7,500
009		BITS, COREHEAD, DRLG. TOOLS		2,000	2,000
010	103	RENTALS		16,000	16,000
012	102	CEMENTING		35,000	35,000
013	107	CONTRACT LABOR		10,500	10,500
014	105	LOGGING & PERFORATING		42,000	42,000
015	110	SUPERVISION & OVERHEAD		6,700	6,700
024	114	TRANSPORTATION		30,000	30,000
026	104	SPECIAL SERVICES (DST's, etc.)			
016	111	MISCELLANEOUS (5%)		39,000	39,000
025		PLUG & ABANDONMENT			
	106	STIMULATION		65,000	65,000
	108	NON-CONTROLLED EQUIPMENT			
TOTAL INTANGIBLE EXPENSES				$ 813,700	$ 813,700

	TANGIBLE EXPENSES	DRY HOLE	COMPLETION	TOTAL
	CONDUCTOR CSG.			
	SURFACE CSG.			
	INTERMEDIATE CSG.			
	WELLHEAD		55,000	55,000
	PRODUCTION CSG.			
	LINER		20,165	20,165
	TUBING		94,165	94,165
	DOWNHOLE EQUIPMENT		9,000	9,000
	ARTIFICIAL LIFT			
	PRODUCTION FACILITIES			
	MISCELLANEOUS			
TOTAL TANGIBLE EXPENSES			$ 178,330	$ 178,330
TOTAL WELL COST ESTIMATE				

APPENDIX C

COSTS FOR CLASS I AND CLASS II INJECTION WELL SITE FACILITIES

Prepared by EPPS and Associates Consulting Engineers, Inc.

BASIN : APPALACHIAN
INJECTION PRESSURE : 800 PSI AND ABOVE
CLASS I

	QUANTITY NO. UNITS	UNIT MEAS	MATERIAL PER UNIT	MATERIAL TOTAL	LABOR PER UNIT	LABOR TOTAL	TOTAL COST
VALVES							
PLASTIC	50	EA	440	22000	60	3000	25,000
S.S. ANSI 600	8	EA	8050	64400	200	1600	66,000
PIPE							
PLASTIC	800	FT	20	16000	9	7200	23,200
S.S. SCH. 80	200	FT	150	30000	20	4000	34,000
TANKS							
FIBERGLASS							
500 BBL	7	EA	11250	78750	2325	16275	95,025
1000 BBL	4	EA	26750	107000	7000	28000	135,000
COATED STEEL							
5000 BBL	2	EA	70000	140000	35000	70000	210,000
METERS	2	EA	3800	7600	600	1200	8,800
CHEMICAL SYSTEM							
TANKS	4	EA	1200	4800	300	1200	6,000
PUMPS	4	EA	600	2400	100	400	2,800
S.S. TUBING	160	FT	3	480	3	480	960
PUMPS							
CENTRIFUGAL	6	EA	2000	12000	400	2400	14,400
POSITIVE DISPL.	2	EA	90000	180000	10000	20000	200,000
FILTERS	4	EA	8800	35200	1200	4800	40,000
FITTINGS, PRESS. GAGES, MISC.				20% OF EQUIPMENT COST			172,237
SITE WORK, BUILDINGS						50000	50,000
ANNULAR FLUID	120	BBL	35	4200	1	120	4,320
TANK	1	EA	1200	1200	300	300	1,500
OVERHEAD & PROFIT 15%							162,513
						TOTAL	$1,251,755

BASIN : MISSISSIPPI SALT DOME
INJECTION PRESSURE : 800 PSI AND ABOVE
CLASS I

	QUANTITY NO. UNITS	UNIT MEAS	MATERIAL PER UNIT	TOTAL	LABOR PER UNIT	TOTAL	TOTAL COST
VALVES							
PLASTIC	50	EA	475.2	23760	64.8	3240	27,000
S.S. ANSI 600	8	EA	8694	69552	216	1728	71,280
PIPE							
PLASTIC	800	FT	21.6	17280	9.72	7776	25,056
S.S. SCH. 80	200	FT	162	32400	21.6	4320	36,720
TANKS							
FIBERGLASS							
500 BBL	7	EA	12150	85050	2511	17577	102,627
1000 BBL	4	EA	28890	115560	7560	30240	145,800
COATED STEEL							
5000 BBL	2	EA	75600	151200	37800	75600	226,800
METERS	2	EA	4104	8208	648	1296	9,504
CHEMICAL SYSTEM							
TANKS	4	EA	1296	5184	324	1296	6,480
PUMPS	4	EA	648	2592	108	432	3,024
S.S. TUBING	160	FT	3.24	518.4	3.24	518.4	1,037
PUMPS							
CENTRIFUGAL	6	EA	2160	12960	432	2592	15,552
POSITIVE DISPL.	2	EA	97200	194400	10800	21600	216,000
FILTERS	4	EA	9504	38016	1296	5184	43,200
FITTINGS, PRESS. GAGES, MIS .				20% OF EQUIPMENT COST			186,016
SITE WORK, BUILDINGS						54000	54,000
ANNULAR FLUID	120	BBL	37.8	4536	1.08	129.6	4,666
TANK	1	EA	1296	1296	324	324	1,620
OVERHEAD & PROFIT 15%							175,514
						TOTAL	$1,351,896

BASIN : ARKLA
INJECTION PRESSURE : BELOW 200 PSI
CLASS I

	QUANTITY NO. UNITS	UNIT MEAS	MATERIAL PER UNIT	TOTAL	LABOR PER UNIT	TOTAL	TOTAL COST
VALVES							
PLASTIC	50	EA	475.2	23760	64.8	3240	27,000
S.S. ANSI 150	8	EA	1944	15552	216	1728	17,280
PIPE							
PLASTIC	800	FT	21.6	17280	9.72	7776	25,056
S.S. SCH. 40	200	FT	51.84	10368	16.2	3240	13,608
TANKS							
FIBERGLASS							
500 BBL	7	EA	12150	85050	2511	17577	102,627
1000 BBL	4	EA	28890	115560	7560	30240	145,800
COATED STEEL							
5000 BBL	2	EA	75600	151200	37800	75600	226,800
METERS	2	EA	4104	8208	648	1296	9,504
CHEMICAL SYSTEM							
TANKS	4	EA	1296	5184	324	1296	6,480
PUMPS	4	EA	648	2592	108	432	3,024
S.S. TUBING	160	FT	3.24	518.4	3.24	518.4	1,037
PUMPS							
CENTRIFUGAL	6	EA	2160	12960	432	2592	15,552
POSITIVE DISPL.	2	EA	27000	54000	6480	12960	66,960
FILTERS	4	EA	9504	38016	1296	5184	43,200
FITTINGS, PRESS. GAGES, MIS .				20% OF EQUIPMENT COST			140,786
SITE WORK, BUILDINGS						54000	54,000
ANNULAR FLUID	120	BBL	37.8	4536	1.08	129.6	4,666
TANK	1	EA	1296	1296	324	324	1,620
OVERHEAD & PROFIT 15%							134,807
						TOTAL	$1,039,806

BASIN : MICHIGAN
INJECTION PRESSURE : 200 PSI TO 800 PSI
CLASS I

	QUANTITY NO. UNITS	UNIT MEAS	MATERIAL PER UNIT	TOTAL	LABOR PER UNIT	TOTAL	TOTAL COST
VALVES							
PLASTIC	50	EA	440	22000	60	3000	25,000
S.S. ANSI 300	8	EA	3300	26400	200	1600	28,000
PIPE							
PLASTIC	800	FT	20	16000	9	7200	23,200
S.S. SCH. 40	200	FT	48	9600	15	3000	12,600
TANKS							
FIBERGLASS							
500 BBL	7	EA	11250	78750	2325	16275	95,025
1000 BBL	4	EA	26750	107000	7000	28000	135,000
COATED STEEL							
5000 BBL	2	EA	70000	140000	35000	70000	210,000
METERS	2	EA	3800	7600	600	1200	8,800
CHEMICAL SYSTEM							
TANKS	4	EA	1200	4800	300	1200	6,000
PUMPS	4	EA	600	2400	100	400	2,800
S.S. TUBING	160	FT	3	480	3	480	960
PUMPS							
CENTRIFUGAL	6	EA	2000	12000	400	2400	14,400
POSITIVE DISPL.	2	EA	64000	128000	8000	16000	144,000
FILTERS	4	EA	8800	35200	1200	4800	40,000
FITTINGS, PRESS. GAGES, MIS .				20% OF EQUIPMENT COST			149,157
SITE WORK, BUILDINGS						50000	50,000
ANNULAR FLUID	120	BBL	35	4200	1	120	4,320
TANK	1	EA	1200	1200	300	300	1,500
OVERHEAD & PROFIT 15%							141,741
						TOTAL	$1,092,503

BASIN : ILLINOIS
INJECTION PRESSURE : BELOW 200 PSI
CLASS I

	QUANTITY NO. UNITS	UNIT MEAS	MATERIAL PER UNIT	MATERIAL TOTAL	LABOR PER UNIT	LABOR TOTAL	TOTAL COST
VALVES							
PLASTIC	50	EA	440	22000	60	3000	25,000
S.S. ANSI 150	8	EA	1800	14400	200	1600	16,000
PIPE							
PLASTIC	800	FT	20	16000	9	7200	23,200
S.S. SCH. 40	200	FT	48	9600	15	3000	12,600
TANKS							
FIBERGLASS							
500 BBL	7	EA	11250	78750	2325	16275	95,025
1000 BBL	4	EA	26750	107000	7000	28000	135,000
COATED STEEL							
5000 BBL	2	EA	70000	140000	35000	70000	210,000
METERS	2	EA	3800	7600	600	1200	8,800
CHEMICAL SYSTEM							
TANKS	4	EA	1200	4800	300	1200	6,000
PUMPS	4	EA	600	2400	100	400	2,800
S.S. TUBING	160	FT	3	480	3	480	960
PUMPS							
CENTRIFUGAL	6	EA	2000	12000	400	2400	14,400
POSITIVE DISPL.	2	EA	25000	50000	6000	12000	62,000
FILTERS	4	EA	8800	35200	1200	4800	40,000
FITTINGS, PRESS. GAGES, MIS .				20% OF EQUIPMENT COST			130,357
SITE WORK, BUILDINGS						50000	50,000
ANNULAR FLUID	120	BBL	35	4200	1	120	4,320
TANK	1	EA	1200	1200	300	300	1,500
OVERHEAD & PROFIT 15%							124,821
						TOTAL	$962,783

BASIN : WILLISTON
INJECTION PRESSURE : 200 PSI TO 800 PSI
CLASS I

	QUANTITY NO. UNITS	UNIT MEAS	MATERIAL PER UNIT	MATERIAL TOTAL	LABOR PER UNIT	LABOR TOTAL	TOTAL COST
VALVES							
PLASTIC	50	EA	484	24200	66	3300	27,500
S.S. ANSI 300	8	EA	3630	29040	220	1760	30,800
PIPE							
PLASTIC	800	FT	22	17600	9.9	7920	25,520
S.S. SCH. 40	200	FT	52.8	10560	16.5	3300	13,860
TANKS							
FIBERGLASS							
500 BBL	7	EA	12375	86625	2557.	17902.5	104,528
1000 BBL	4	EA	29425	117700	7700	30800	148,500
COATED STEEL							
5000 BBL	2	EA	77000	154000	38500	77000	231,000
METERS	2	EA	4180	8360	660	1320	9,680
CHEMICAL SYSTEM							
TANKS	4	EA	1320	5280	330	1320	6,600
PUMPS	4	EA	660	2640	110	440	3,080
S.S. TUBING	160	FT	3.3	528	3.3	528	1,056
PUMPS							
CENTRIFUGAL	6	EA	2200	13200	440	2640	15,840
POSITIVE DISPL.	2	EA	70400	140800	8800	17600	158,400
FILTERS	4	EA	9680	38720	1320	5280	44,000
FITTINGS, PRESS. GAGES, MIS .				20% OF EQUIPMENT COST			164,073
SITE WORK, BUILDINGS						55000	55,000
ANNULAR FLUID	120	BBL	38.5	4620	1.1	132	4,752
TANK	1	EA	1320	1320	330	330	1,650
OVERHEAD & PROFIT 15%							155,915
						TOTAL	$1,201,754

BASIN :HUGOTON
INJECTION PRESSURE : BELOW 200 PSI
CLASS I

	QUANTITY NO. UNITS	UNIT MEAS	MATERIAL PER UNIT	MATERIAL TOTAL	LABOR PER UNIT	LABOR TOTAL	TOTAL COST
VALVES							
PLASTIC	50	EA	462	23100	63	3150	26,250
S.S. ANSI 150	8	EA	1890	15120	210	1680	16,800
PIPE							
PLASTIC	800	FT	21	16800	9.45	7560	24,360
S.S. SCH. 40	200	FT	50.4	10080	15.75	3150	13,230
TANKS							
FIBERGLASS							
500 BBL	7	EA	11812	82687.5	2441.	17088.75	99,776
1000 BBL	4	EA	28087	112350	7350	29400	141,750
COATED STEEL							
5000 BBL	2	EA	73500	147000	36750	73500	220,500
METERS	2	EA	3990	7980	630	1260	9,240
CHEMICAL SYSTEM							
TANKS	4	EA	1260	5040	315	1260	6,300
PUMPS	4	EA	630	2520	105	420	2,940
S.S. TUBING	160	FT	3.15	504	3.15	504	1,008
PUMPS							
CENTRIFUGAL	6	EA	2100	12600	420	2520	15,120
POSITIVE DISPL.	2	EA	26250	52500	6300	12600	65,100
FILTERS	4	EA	9240	36960	1260	5040	42,000
FITTINGS, PRESS. GAGES, MIS .				20% OF EQUIPMENT COST			136,875
SITE WORK, BUILDINGS						52500	52,500
ANNULAR FLUID	120	BBL	36.75	4410	1.05	126	4,536
TANK	1	EA	1260	1260	315	315	1,575
OVERHEAD & PROFIT 15%							131,062
						TOTAL	$1,010,923

BASIN :PERMIAN
INJECTION PRESSURE : 200 PSI TO 800 PSI
CLASS I

	QUANTITY NO. UNITS	UNIT MEAS	MATERIAL PER UNIT	TOTAL	LABOR PER UNIT	TOTAL	TOTAL COST
VALVES							
PLASTIC	50	EA	462	23100	63	3150	26,250
S.S. ANSI 300	8	EA	3465	27720	210	1680	29,400
PIPE							
PLASTIC	800	FT	21	16800	9.45	7560	24,360
S.S. SCH. 40	200	FT	50.4	10080	15.75	3150	13,230
TANKS							
FIBERGLASS							
500 BBL	7	EA	11812	82687.5	2441.	17088.75	99,776
1000 BBL	4	EA	28087	112350	7350	29400	141,750
COATED STEEL							
5000 BBL	2	EA	73500	147000	36750	73500	220,500
METERS	2	EA	3990	7980	630	1260	9,240
CHEMICAL SYSTEM							
TANKS	4	EA	1260	5040	315	1260	6,300
PUMPS	4	EA	630	2520	105	420	2,940
S.S. TUBING	160	FT	3.15	504	3.15	504	1,008
PUMPS							
CENTRIFUGAL	6	EA	2100	12600	420	2520	15,120
POSITIVE DISPL.	2	EA	67200	134400	8400	16800	151,200
FILTERS	4	EA	9240	36960	1260	5040	42,000
FITTINGS, PRESS. GAGES, MIS .				20% OF EQUIPMENT COST			156,615
SITE WORK, BUILDINGS						52500	52,500
ANNULAR FLUID	120	BBL	36.75	4410	1.05	126	4,536
TANK	1	EA	1260	1260	315	315	1,575
OVERHEAD & PROFIT 15%							148,828
						TOTAL	$1,147,128

BASIN : ANADARKO
INJECTION PRESSURE : 800 PSI AND ABOVE
CLASS I

	QUANTITY NO. UNITS	UNIT MEAS	MATERIAL PER UNIT	TOTAL	LABOR PER UNIT	TOTAL	TOTAL COST
VALVES							
PLASTIC	50	EA	462	23100	63	3150	26,250
S.S. ANSI 600	8	EA	8452.	67620	210	1680	69,300
PIPE							
PLASTIC	800	FT	21	16800	9.45	7560	24,360
S.S. SCH. 80	200	FT	157.5	31500	21	4200	35,700
TANKS							
FIBERGLASS							
500 BBL	7	EA	11812	82687.5	2441.	17088.75	99,776
1000 BBL	4	EA	28087	112350	7350	29400	141,750
COATED STEEL							
5000 BBL	2	EA	73500	147000	36750	73500	220,500
METERS	2	EA	3990	7980	630	1260	9,240
CHEMICAL SYSTEM							
TANKS	4	EA	1260	5040	315	1260	6,300
PUMPS	4	EA	630	2520	105	420	2,940
S.S. TUBING	160	FT	3.15	504	3.15	504	1,008
PUMPS							
CENTRIFUGAL	6	EA	2100	12600	420	2520	15,120
POSITIVE DISPL.	2	EA	94500	189000	10500	21000	210,000
FILTERS	4	EA	9240	36960	1260	5040	42,000
FITTINGS, PRESS. GAGES, MIS .				20% OF EQUIPMENT COST			180,849
SITE WORK, BUILDINGS						52500	52,500
ANNULAR FLUID	120	BBL	36.75	4410	1.05	126	4,536
TANK	1	EA	1260	1260	315	315	1,575
OVERHEAD & PROFIT 15%							170,639
						TOTAL	$1,314,343

BASIN :GULF COAST SALT DOME
INJECTION PRESSURE : 200 PSI TO 800 PSI
CLASS I

	QUANTITY NO. UNITS	UNIT MEAS	MATERIAL PER UNIT	TOTAL	LABOR PER UNIT	TOTAL	TOTAL COST
VALVES							
PLASTIC	50	EA	426.8	21340	58.2	2910	24,250
S.S. ANSI 300	8	EA	3201	25608	194	1552	27,160
PIPE							
PLASTIC	800	FT	19.4	15520	8.73	6984	22,504
S.S. SCH. 40	200	FT	46.56	9312	14.55	2910	12,222
TANKS							
FIBERGLASS							
500 BBL	7	EA	10912	76387.5	2255.	15786.75	92,174
1000 BBL	4	EA	25947	103790	6790	27160	130,950
COATED STEEL							
5000 BBL	2	EA	67900	135800	33950	67900	203,700
METERS	2	EA	3686	7372	582	1164	8,536
CHEMICAL SYSTEM							
TANKS	4	EA	1164	4656	291	1164	5,820
PUMPS	4	EA	582	2328	97	388	2,716
S.S. TUBING	160	FT	2.91	465.6	2.91	465.6	931
PUMPS							
CENTRIFUGAL	6	EA	1940	11640	388	2328	13,968
POSITIVE DISPL.	2	EA	62080	124160	7760	15520	139,680
FILTERS	4	EA	8536	34144	1164	4656	38,800
FITTINGS, PRESS. GAGES, MIS .				20% OF EQUIPMENT COST			144,632
SITE WORK, BUILDINGS						48500	48,500
ANNULAR FLUID	120	BBL	33.95	4074	0.97	116.4	4,190
TANK	1	EA	1164	1164	291	291	1,455
OVERHEAD & PROFIT 15%							137,489
						TOTAL	$1,059,729

BASIN : POWDER RIVER
INJECTION PRESSURE : 800 PSI AND ABOVE
CLASS I

	QUANTITY NO. UNITS	UNIT MEAS	MATERIAL PER UNIT	MATERIAL TOTAL	LABOR PER UNIT	LABOR TOTAL	TOTAL COST
VALVES							
PLASTIC	50	EA	418	20900	57	2850	23,750
S.S. ANSI 600	8	EA	7647.	61180	190	1520	62,700
PIPE							
PLASTIC	800	FT	19	15200	8.55	6840	22,040
S.S. SCH. 80	200	FT	142.5	28500	19	3800	32,300
TANKS							
FIBERGLASS							
500 BBL	7	EA	10687	74812.5	2208.	15461.25	90,274
1000 BBL	4	EA	25412	101650	6650	26600	128,250
COATED STEEL							
5000 BBL	2	EA	66500	133000	33250	66500	199,500
METERS	2	EA	3610	7220	570	1140	8,360
CHEMICAL SYSTEM							
TANKS	4	EA	1140	4560	285	1140	5,700
PUMPS	4	EA	570	2280	95	380	2,660
S.S. TUBING	160	FT	2.85	456	2.85	456	912
PUMPS							
CENTRIFUGAL	6	EA	1900	11400	380	2280	13,680
POSITIVE DISPL.	2	EA	85500	171000	9500	19000	190,000
FILTERS	4	EA	8360	33440	1140	4560	38,000
FITTINGS, PRESS. GAGES, MIS .				20% OF EQUIPMENT COST			163,625
SITE WORK, BUILDINGS						47500	47,500
ANNULAR FLUID	120	BBL	33.25	3990	0.95	114	4,104
TANK	1	EA	1140	1140	285	285	1,425
OVERHEAD & PROFIT 15%							154,388
						TOTAL	$1,189,168

BASIN : SAN JUAN
INJECTION PRESSURE : 800 PSI AND ABOVE
CLASS I

	QUANTITY NO. UNITS	UNIT MEAS	MATERIAL PER UNIT	TOTAL	LABOR PER UNIT	TOTAL	TOTAL COST
VALVES							
PLASTIC	50	EA	426.8	21340	58.2	2910	24,250
S.S. ANSI 600	8	EA	7808.	62468	194	1552	64,020
PIPE							
PLASTIC	800	FT	19.4	15520	8.73	6984	22,504
S.S. SCH. 80	200	FT	145.5	29100	19.4	3880	32,980
TANKS							
FIBERGLASS							
500 BBL	7	EA	10912	76387.5	2255.	15786.75	92,174
1000 BBL	4	EA	25947	103790	6790	27160	130,950
COATED STEEL							
5000 BBL	2	EA	67900	135800	33950	67900	203,700
METERS	2	EA	3686	7372	582	1164	8,536
CHEMICAL SYSTEM							
TANKS	4	EA	1164	4656	291	1164	5,820
PUMPS	4	EA	582	2328	97	388	2,716
S.S. TUBING	160	FT	2.91	465.6	2.91	465.6	931
PUMPS							
CENTRIFUGAL	6	EA	1940	11640	388	2328	13,968
POSITIVE DISPL.	2	EA	87300	174600	9700	19400	194,000
FILTERS	4	EA	8536	34144	1164	4656	38,800
FITTINGS, PRESS. GAGES, MIS .				20% OF EQUIPMENT COST			167,070
SITE WORK, BUILDINGS						48500	48,500
ANNULAR FLUID	120	BBL	33.95	4074	0.97	116.4	4,190
TANK	1	EA	1164	1164	291	291	1,455
OVERHEAD & PROFIT 15%							157,638
						TOTAL	$1,214,203

BASIN : DENVER - JULESBURG
INJECTION PRESSURE : 800 PSI AND ABOVE
CLASS I

	QUANTITY NO. UNITS	UNIT MEAS	MATERIAL PER UNIT	TOTAL	LABOR PER UNIT	TOTAL	TOTAL COST
VALVES							
PLASTIC	50	EA	418	20900	57	2850	23,750
S.S. ANSI 600	8	EA	7647.	61180	190	1520	62,700
PIPE							
PLASTIC	800	FT	19	15200	8.55	6840	22,040
S.S. SCH. 80	200	FT	142.5	28500	19	3800	32,300
TANKS							
FIBERGLASS							
500 BBL	7	EA	10687	74812.5	2208.	15461.25	90,274
1000 BBL	4	EA	25412	101650	6650	26600	128,250
COATED STEEL							
5000 BBL	2	EA	66500	133000	33250	66500	199,500
METERS	2	EA	3610	7220	570	1140	8,360
CHEMICAL SYSTEM							
TANKS	4	EA	1140	4560	285	1140	5,700
PUMPS	4	EA	570	2280	95	380	2,660
S.S. TUBING	160	FT	2.85	456	2.85	456	912
PUMPS							
CENTRIFUGAL	6	EA	1900	11400	380	2280	13,680
POSITIVE DISPL.	2	EA	85500	171000	9500	19000	190,000
FILTERS	4	EA	8360	33440	1140	4560	38,000
FITTINGS, PRESS. GAGES, MIS .				20% OF EQUIPMENT COST			163,625
SITE WORK, BUILDINGS						47500	47,500
ANNULAR FLUID	120	BBL	33.25	3990	0.95	114	4,104
TANK	1	EA	1140	1140	285	285	1,425
OVERHEAD & PROFIT 15%							154,388
						TOTAL	$1,189,168

BASIN : SAN JOAQUIN
INJECTION PRESSURE : 200 PSI TO 800 PSI
CLASS I

	QUANTITY NO. UNITS	UNIT MEAS	MATERIAL PER UNIT	MATERIAL TOTAL	LABOR PER UNIT	LABOR TOTAL	TOTAL COST
VALVES							
PLASTIC	50	EA	528	26400	72	3600	30,000
S.S. ANSI 300	8	EA	3960	31680	240	1920	33,600
PIPE							
PLASTIC	800	FT	24	19200	10.8	8640	27,840
S.S. SCH. 40	200	FT	57.6	11520	18	3600	15,120
TANKS							
FIBERGLASS							
500 BBL	7	EA	13500	94500	2790	19530	114,030
1000 BBL	4	EA	32100	128400	8400	33600	162,000
COATED STEEL							
5000 BBL	2	EA	84000	168000	42000	84000	252,000
METERS	2	EA	4560	9120	720	1440	10,560
CHEMICAL SYSTEM							
TANKS	4	EA	1440	5760	360	1440	7,200
PUMPS	4	EA	720	2880	120	480	3,360
S.S. TUBING	160	FT	3.6	576	3.6	576	1,152
PUMPS							
CENTRIFUGAL	6	EA	2400	14400	480	2880	17,280
POSITIVE DISPL.	2	EA	76800	153600	9600	19200	172,800
FILTERS	4	EA	10560	42240	1440	5760	48,000
FITTINGS, PRESS. GAGES, MIS .				20% OF EQUIPMENT COST			178,938
SITE WORK, BUILDINGS						60000	60,000
ANNULAR FLUID	120	BBL	42	5040	1.2	144	5,184
TANK	1	EA	1440	1440	360	360	1,800
OVERHEAD & PROFIT 15%							170,090
						TOTAL	$1,311,004

BASIN :NORHT SLOPE
INJECTION PRESSURE : 800 PSI AND ABOVE
CLASS I

	QUANTITY NO. UNITS	UNIT MEAS	MATERIAL PER UNIT	TOTAL	LABOR PER UNIT	TOTAL	TOTAL COST
VALVES							
PLASTIC	50	EA	1848	92400	252	12600	105,000
S.S. ANSI 600	8	EA	33810	270480	840	6720	277,200
PIPE							
PLASTIC	800	FT	84	67200	37.8	30240	97,440
S.S. SCH. 80	200	FT	630	126000	84	16800	142,800
TANKS							
FIBERGLASS							
500 BBL	7	EA	47250	330750	9765	68355	399,105
1000 BBL	4	EA	112350	449400	29400	117600	567,000
COATED STEEL							
5000 BBL	2	EA	294000	588000	147000	294000	882,000
METERS	2	EA	15960	31920	2520	5040	36,960
CHEMICAL SYSTEM							
TANKS	4	EA	5040	20160	1260	5040	25,200
PUMPS	4	EA	2520	10080	420	1680	11,760
S.S. TUBING	160	FT	12.6	2016	12.6	2016	4,032
PUMPS							
CENTRIFUGAL	6	EA	8400	50400	1680	10080	60,480
POSITIVE DISPL.	2	EA	378000	756000	42000	84000	840,000
FILTERS	4	EA	36960	147840	5040	20160	168,000
FITTINGS, PRESS. GAGES, MIS .				20% OF EQUIPMENT COST			723,395
SITE WORK, BUILDINGS						210000	210,000
ANNULAR FLUID	120	BBL	147	17640	4.2	504	18,144
TANK	1	EA	5040	5040	1260	1260	6,300
OVERHEAD & PROFIT 15%							682,556
						TOTAL	$5,257,372

BASIN : APPALACHIAN
INJECTION PRESSURE : 800 PSI AND ABOVE
CLASS II

	QUANTITY NO. UNITS	UNIT MEAS	MATERIAL PER UNIT	MATERIAL TOTAL	LABOR PER UNIT	LABOR TOTAL	TOTAL COST
VALVES							
PLASTIC	50	EA	440	22000	60	3000	25,000
STEEL ANSI 600	8	EA	3725	29800	200	1600	31,400
PIPE							
PLASTIC	800	FT	20	16000	9	7200	23,200
STEEL SCH. 80	200	FT	26	5200	18	3600	8,800
TANKS							
FIBERGLASS							
500 BBL	3	EA	11250	33750	2325	6975	40,725
1000 BBL	2	EA	26750	53500	7000	14000	67,500
COATED STEEL							
5000 BBL	2	EA	70000	140000	35000	70000	210,000
METERS	2	EA	3800	7600	600	1200	8,800
CHEMICAL SYSTEM							
TANKS	4	EA	1200	4800	300	1200	6,000
PUMPS	4	EA	600	2400	100	400	2,800
S.S. TUBING	160	FT	3	480	3	480	960
PUMPS							
CENTRIFUGAL	6	EA	2000	12000	400	2400	14,400
POSITIVE DISPL.	2	EA	72000	144000	8000	16000	160,000
FILTERS	4	EA	8800	35200	1200	4800	40,000
FITTINGS, PRESS. GAGES, MISC.				20% OF EQUIPMENT COST			127,917
SITE WORK, BUILDINGS						50000	50,000
OVERHEAD & PROFIT 15%							122,625
						TOTAL	$940,127

BASIN : MISSIPPI SALT DOME
INJECTION PRESSURE : 800 PSI AND ABOVE
CLASS II

	QUANTITY NO. UNITS	UNIT MEAS	MATERIAL PER UNIT	TOTAL	LABOR PER UNIT	TOTAL	TOTAL COST
VALVES							
PLASTIC	50	EA	475.2	23760	64.8	3240	27,000
STEEL ANSI 600	8	EA	4023	32184	216	1728	33,912
PIPE							
PLASTIC	800	FT	21.6	17280	9.72	7776	25,056
STEEL SCH. 80	200	FT	28.08	5616	19.44	3888	9,504
TANKS							
FIBERGLASS							
500 BBL	3	EA	12150	36450	2511	7533	43,983
1000 BBL	2	EA	28890	57780	7560	15120	72,900
COATED STEEL							
5000 BBL	2	EA	75600	151200	37800	75600	226,800
METERS	2	EA	4104	8208	648	1296	9,504
CHEMICAL SYSTEM							
TANKS	4	EA	1296	5184	324	1296	6,480
PUMPS	4	EA	648	2592	108	432	3,024
S.S. TUBING	160	FT	3.24	518.4	3.24	518.4	1,037
PUMPS							
CENTRIFUGAL	6	EA	2160	12960	432	2592	15,552
POSITIVE DISPL.	2	EA	77760	155520	8640	17280	172,800
FILTERS	4	EA	9504	38016	1296	5184	43,200
FITTINGS, PRESS. GAGES, MISC.				20% OF EQUIPMENT COST			138,150
SITE WORK, BUILDINGS						54000	54,000
OVERHEAD & PROFIT 15%							132,435
						TOTAL	$1,015,337

BASIN : ARKLA
INJECTION PRESSURE : BELOW 200 PSI
CLASS II

	QUANTITY NO. UNITS	UNIT MEAS	MATERIAL PER UNIT	MATERIAL TOTAL	LABOR PER UNIT	LABOR TOTAL	TOTAL COST
VALVES							
PLASTIC	58	EA	475.2	27561.6	64.8	3758.4	31,320
PIPE							
PLASTIC	1000	FT	21.6	21600	9.72	9720	31,320
TANKS							
FIBERGLASS							
500 BBL	3	EA	12150	36450	2511	7533	43,983
1000 BBL	2	EA	28890	57780	7560	15120	72,900
COATED STEEL							
5000 BBL	2	EA	75600	151200	37800	75600	226,800
METERS	2	EA	4104	8208	648	1296	9,504
CHEMICAL SYSTEM							
TANKS	4	EA	1296	5184	324	1296	6,480
PUMPS	4	EA	648	2592	108	432	3,024
S.S. TUBING	160	FT	3.24	518.4	3.24	518.4	1,037
PUMPS							
CENTRIFUGAL	6	EA	2160	12960	432	2592	15,552
POSITIVE DISPL.	2	EA	18360	36720	4320	8640	45,360
FILTERS	4	EA	9504	38016	1296	5184	43,200
FITTINGS, PRESS. GAGES, MISC.				20% OF EQUIPMENT COST			106,096
SITE WORK, BUILDINGS						54000	54,000
OVERHEAD & PROFIT 15%							103,586
						TOTAL	$794,162

BASIN : MICHIGAN
INJECTION PRESSURE : 200 PSI TO 600 PSI
CLASS II

	QUANTITY NO. UNITS	UNIT MEAS	MATERIAL PER UNIT	TOTAL	LABOR PER UNIT	TOTAL	TOTAL COST
VALVES							
PLASTIC	50	EA	440	22000	60	3000	25,000
STEEL ANSI 300	8	EA	1600	12800	200	1600	14,400
PIPE							
PLASTIC	800	FT	20	16000	9	7200	23,200
STEEL SCH. 40	200	FT	24	4800	15	3000	7,800
TANKS							
FIBERGLASS							
500 BBL	3	EA	11250	33750	2325	6975	40,725
1000 BBL	2	EA	26750	53500	7000	14000	67,500
COATED STEEL							
5000 BBL	2	EA	70000	140000	35000	70000	210,000
METERS	2	EA	3800	7600	600	1200	8,800
CHEMICAL SYSTEM							
TANKS	4	EA	1200	4800	300	1200	6,000
PUMPS	4	EA	600	2400	100	400	2,800
S.S. TUBING	160	FT	3	480	3	480	960
PUMPS							
CENTRIFUGAL	6	EA	2000	12000	400	2400	14,400
POSITIVE DISPL.	2	EA	50000	100000	6000	12000	112,000
FILTERS	4	EA	8800	35200	1200	4800	40,000
FITTINGS, PRESS. GAGES, MISC.				20% OF EQUIPMENT COST			114,717
SITE WORK, BUILDINGS						50000	50,000
OVERHEAD & PROFIT 15%							110,745
						TOTAL	$849,047

BASIN : ILLINOIS
INJECTION PRESSURE : BELOW 200 PSI
CLASS II

	QUANTITY NO. UNITS	UNIT MEAS	MATERIAL PER UNIT	TOTAL	LABOR PER UNIT	TOTAL	TOTAL COST
VALVES							
PLASTIC	58	EA	440	25520	60	3480	29,000
PIPE							
PLASTIC	1000	FT	20	20000	9	9000	29,000
TANKS							
FIBERGLASS							
500 BBL	3	EA	11250	33750	2325	6975	40,725
1000 BBL	2	EA	26750	53500	7000	14000	67,500
COATED STEEL							
5000 BBL	2	EA	70000	140000	35000	70000	210,000
METERS	2	EA	3800	7600	600	1200	8,800
CHEMICAL SYSTEM							
TANKS	4	EA	1200	4800	300	1200	6,000
PUMPS	4	EA	600	2400	100	400	2,800
S.S. TUBING	160	FT	3	480	3	480	960
PUMPS							
CENTRIFUGAL	6	EA	2000	12000	400	2400	14,400
POSITIVE DISPL.	2	EA	17000	34000	4000	8000	42,000
FILTERS	4	EA	8800	35200	1200	4800	40,000
FITTINGS, PRESS. GAGES, MISC.				20% OF EQUIPMENT COST			98,237
SITE WORK, BUILDINGS						50000	50,000
OVERHEAD & PROFIT 15%							95,913
						TOTAL	$735,335

BASIN : WILLISTON
INJECTION PRESSURE : 200 PSI TO 800 PSI
CLASS II

	QUANTITY NO. UNITS	UNIT MEAS	MATERIAL PER UNIT	MATERIAL TOTAL	LABOR PER UNIT	LABOR TOTAL	TOTAL COST
VALVES							
PLASTIC	50	EA	484	24200	66	3300	27,500
STEEL ANSI 300	8	EA	1760	14080	220	1760	15,840
PIPE							
PLASTIC	800	FT	22	17600	9.9	7920	25,520
STEEL SCH. 40	200	FT	26.4	5280	16.5	3300	8,580
TANKS							
FIBERGLASS							
500 BBL	3	EA	12375	37125	2557.	7672.5	44,798
1000 BBL	2	EA	29425	58850	7700	15400	74,250
COATED STEEL							
5000 BBL	2	EA	77000	154000	38500	77000	231,000
METERS	2	EA	4180	8360	660	1320	9,680
CHEMICAL SYSTEM							
TANKS	4	EA	1320	5280	330	1320	6,600
PUMPS	4	EA	660	2640	110	440	3,080
S.S. TUBING	160	FT	3.3	528	3.3	528	1,056
PUMPS							
CENTRIFUGAL	6	EA	2200	13200	440	2640	15,840
POSITIVE DISPL.	2	EA	55000	110000	6600	13200	123,200
FILTERS	4	EA	9680	38720	1320	5280	44,000
FITTINGS, PRESS. GAGES, MISC.				20% OF EQUIPMENT COST			126,159
SITE WORK, BUILDINGS						55000	55,000
OVERHEAD & PROFIT 15%							121,820
						TOTAL	$933,952

BASIN :HUGOTON
INJECTION PRESSURE : BELOW 200 PSI
CLASS II

	QUANTITY NO. UNITS	UNIT MEAS	MATERIAL PER UNIT	TOTAL	LABOR PER UNIT	TOTAL	TOTAL COST
VALVES							
PLASTIC	58	EA	462	26796	63	3654	30,450
PIPE							
PLASTIC	1000	FT	21	21000	9.45	9450	30,450
TANKS							
FIBERGLASS							
500 BBL	3	EA	11812	35437.5	2441.	7323.75	42,761
1000 BBL	2	EA	28087	56175	7350	14700	70,875
COATED STEEL							
5000 BBL	2	EA	73500	147000	36750	73500	220,500
METERS	2	EA	3990	7980	630	1260	9,240
CHEMICAL SYSTEM							
TANKS	4	EA	1260	5040	315	1260	6,300
PUMPS	4	EA	630	2520	105	420	2,940
S.S. TUBING	160	FT	3.15	504	3.15	504	1,008
PUMPS							
CENTRIFUGAL	6	EA	2100	12600	420	2520	15,120
POSITIVE DISPL.	2	EA	17850	35700	4200	8400	44,100
FILTERS	4	EA	9240	36960	1260	5040	42,000
FITTINGS, PRESS. GAGES, MIS .				20% OF EQUIPMENT COST			103,149
SITE WORK, BUILDINGS						52500	52,500
OVERHEAD & PROFIT 15%							100,709
						TOTAL	$772,102

BASIN : PERMIAN
INJECTION PRESSURE : 200 PSI TO 800 PSI
CLASS II

	QUANTITY NO. UNITS	UNIT MEAS	MATERIAL PER UNIT	MATERIAL TOTAL	LABOR PER UNIT	LABOR TOTAL	TOTAL COST
VALVES							
PLASTIC	50	EA	462	23100	63	3150	26,250
STEEL ANSI 300	8	EA	1680	13440	210	1680	15,120
PIPE							
PLASTIC	800	FT	21	16800	9.45	7560	24,360
STEEL SCH. 40	200	FT	25.2	5040	15.75	3150	8,190
TANKS							
FIBERGLASS							
500 BBL	3	EA	11812	35437.5	2441.	7323.75	42,761
1000 BBL	2	EA	28087	56175	7350	14700	70,875
COATED STEEL							
5000 BBL	2	EA	73500	147000	36750	73500	220,500
METERS	2	EA	3990	7980	630	1260	9,240
CHEMICAL SYSTEM							
TANKS	4	EA	1260	5040	315	1260	6,300
PUMPS	4	EA	630	2520	105	420	2,940
S.S. TUBING	160	FT	3.15	504	3.15	504	1,008
PUMPS							
CENTRIFUGAL	6	EA	2100	12600	420	2520	15,120
POSITIVE DISPL.	2	EA	52500	105000	6300	12600	117,600
FILTERS	4	EA	9240	36960	1260	5040	42,000
FITTINGS, PRESS. GAGES, MISC.				20% OF EQUIPMENT COST			120,453
SITE WORK, BUILDINGS						52500	52,500
OVERHEAD & PROFIT 15%							116,283
						TOTAL	$891,500

BASIN : ANADARKO
INJECTION PRESSURE : 800 PSI AND ABOVE
CLASS II

	QUANTITY NO. UNITS	UNIT MEAS	MATERIAL PER UNIT	MATERIAL TOTAL	LABOR PER UNIT	LABOR TOTAL	TOTAL COST
VALVES							
PLASTIC	50	EA	462	23100	63	3150	26,250
STEEL ANSI 600	8	EA	3911.	31290	210	1680	32,970
PIPE							
PLASTIC	800	FT	21	16800	9.45	7560	24,360
STEEL SCH. 80	200	FT	27.3	5460	18.9	3780	9,240
TANKS							
FIBERGLASS							
500 BBL	3	EA	11812	35437.5	2441.	7323.75	42,761
1000 BBL	2	EA	28087	56175	7350	14700	70,875
COATED STEEL							
5000 BBL	2	EA	73500	147000	36750	73500	220,500
METERS	2	EA	3990	7980	630	1260	9,240
CHEMICAL SYSTEM							
TANKS	4	EA	1260	5040	315	1260	6,300
PUMPS	4	EA	630	2520	105	420	2,940
S.S. TUBING	160	FT	3.15	504	3.15	504	1,008
PUMPS							
CENTRIFUGAL	6	EA	2100	12600	420	2520	15,120
POSITIVE DISPL.	2	EA	75600	151200	8400	16800	168,000
FILTERS	4	EA	9240	36960	1260	5040	42,000
FITTINGS, PRESS. GAGES, MISC.				20% OF EQUIPMENT COST			134,313
SITE WORK, BUILDINGS						52500	52,500
OVERHEAD & PROFIT 15%							128,757
						TOTAL	$987,134

BASIN : GULF COAST SALT DOME
INJECTION PRESSURE : 200 PSI TO 800 PSI
CLASS II

	QUANTITY NO. UNITS	UNIT MEAS	MATERIAL PER UNIT	MATERIAL TOTAL	LABOR PER UNIT	LABOR TOTAL	TOTAL COST
VALVES							
PLASTIC	50	EA	426.8	21340	58.2	2910	24,250
STEEL ANSI 300	8	EA	1552	12416	194	1552	13,968
PIPE							
PLASTIC	800	FT	19.4	15520	8.73	6984	22,504
STEEL SCH. 40	200	FT	23.28	4656	14.55	2910	7,566
TANKS							
FIBERGLASS							
500 BBL	3	EA	10912	32737.5	2255.	6765.75	39,503
1000 BBL	2	EA	25947	51895	6790	13580	65,475
COATED STEEL							
5000 BBL	2	EA	67900	135800	33950	67900	203,700
METERS	2	EA	3686	7372	582	1164	8,536
CHEMICAL SYSTEM							
TANKS	4	EA	1164	4656	291	1164	5,820
PUMPS	4	EA	582	2328	97	388	2,716
S.S. TUBING	160	FT	2.91	465.6	2.91	465.6	931
PUMPS							
CENTRIFUGAL	6	EA	1940	11640	388	2328	13,968
POSITIVE DISPL.	2	EA	48500	97000	5820	11640	108,640
FILTERS	4	EA	8536	34144	1164	4656	38,800
FITTINGS, PRESS. GAGES, MISC.				20% OF EQUIPMENT COST			111,275
SITE WORK, BUILDINGS						48500	48,500
OVERHEAD & PROFIT 15%							107,423
						TOTAL	$823,576

BASIN : POWDER RIVER
INJECTION PRESSURE : 800 PSI AND ABOVE
CLASS II

	QUANTITY NO. UNITS	UNIT MEAS	MATERIAL PER UNIT	MATERIAL TOTAL	LABOR PER UNIT	LABOR TOTAL	TOTAL COST
VALVES							
PLASTIC	50	EA	418	20900	57	2850	23,750
STEEL ANSI 600	8	EA	3538.	28310	190	1520	29,830
PIPE							
PLASTIC	800	FT	19	15200	8.55	6840	22,040
STEEL SCH. 80	200	FT	24.7	4940	17.1	3420	8,360
TANKS							
FIBERGLASS							
500 BBL	3	EA	10687	32062.5	2208.	6626.25	38,689
1000 BBL	2	EA	25412	50825	6650	13300	64,125
COATED STEEL							
5000 BBL	2	EA	66500	133000	33250	66500	199,500
METERS	2	EA	3610	7220	570	1140	8,360
CHEMICAL SYSTEM							
TANKS	4	EA	1140	4560	285	1140	5,700
PUMPS	4	EA	570	2280	95	380	2,660
S.S. TUBING	160	FT	2.85	456	2.85	456	912
PUMPS							
CENTRIFUGAL	6	EA	1900	11400	380	2280	13,680
POSITIVE DISPL.	2	EA	68400	136800	7600	15200	152,000
FILTERS	4	EA	8360	33440	1140	4560	38,000
FITTINGS, PRESS. GAGES, MISC.				20% OF EQUIPMENT COST			121,521
SITE WORK, BUILDINGS						47500	47,500
OVERHEAD & PROFIT 15%							116,494
						TOTAL	$893,121

BASIN : SAN JUAN
INJECTION PRESSURE : 800 PSI AND ABOVE
CLASS II

	QUANTITY NO. UNITS	UNIT MEAS	MATERIAL PER UNIT	MATERIAL TOTAL	LABOR PER UNIT	LABOR TOTAL	TOTAL COST
VALVES							
PLASTIC	50	EA	426.8	21340	58.2	2910	24,250
STEEL ANSI 600	8	EA	3613.	28906	194	1552	30,458
PIPE							
PLASTIC	800	FT	19.4	15520	8.73	6984	22,504
STEEL SCH. 80	200	FT	25.22	5044	17.46	3492	8,536
TANKS							
FIBERGLASS							
500 BBL	3	EA	10912	32737.5	2255.	6765.75	39,503
1000 BBL	2	EA	25947	51895	6790	13580	65,475
COATED STEEL							
5000 BBL	2	EA	67900	135800	33950	67900	203,700
METERS	2	EA	3686	7372	582	1164	8,536
CHEMICAL SYSTEM							
TANKS	4	EA	1164	4656	291	1164	5,820
PUMPS	4	EA	582	2328	97	388	2,716
S.S. TUBING	160	FT	2.91	465.6	2.91	465.6	931
PUMPS							
CENTRIFUGAL	6	EA	1940	11640	388	2328	13,968
POSITIVE DISPL.	2	EA	69840	139680	7760	15520	155,200
FILTERS	4	EA	8536	34144	1164	4656	38,800
FITTINGS, PRESS. GAGES, MISC.				20% OF EQUIPMENT COST			124,079
SITE WORK, BUILDINGS						48500	48,500
OVERHEAD & PROFIT 15%							118,947
						TOTAL	$911,923

BASIN : DENVER - JULESBURG
INJECTION PRESSURE : 800 PSI AND ABOVE
CLASS II

	QUANTITY NO. UNITS	UNIT MEAS	MATERIAL PER UNIT	MATERIAL TOTAL	LABOR PER UNIT	LABOR TOTAL	TOTAL COST
VALVES							
PLASTIC	50	EA	418	20900	57	2850	23,750
STEEL ANSI 600	8	EA	3538.	28310	190	1520	29,830
PIPE							
PLASTIC	800	FT	19	15200	8.55	6840	22,040
STEEL SCH. 80	200	FT	24.7	4940	17.1	3420	8,360
TANKS							
FIBERGLASS							
500 BBL	3	EA	10687	32062.5	2208.	6626.25	38,689
1000 BBL	2	EA	25412	50825	6650	13300	64,125
COATED STEEL							
5000 BBL	2	EA	66500	133000	33250	66500	199,500
METERS	2	EA	3610	7220	570	1140	8,360
CHEMICAL SYSTEM							
TANKS	4	EA	1140	4560	285	1140	5,700
PUMPS	4	EA	570	2280	95	380	2,660
S.S. TUBING	160	FT	2.85	456	2.85	456	912
PUMPS							
CENTRIFUGAL	6	EA	1900	11400	380	2280	13,680
POSITIVE DISPL.	2	EA	68400	136800	7600	15200	152,000
FILTERS	4	EA	8360	33440	1140	4560	38,000
FITTINGS, PRESS. GAGES, MISC.				20% OF EQUIPMENT COST			121,521
SITE WORK, BUILDINGS						47500	47,500
OVERHEAD & PROFIT 15%							116,494
						TOTAL	$893,121

BASIN : SAN JOAQUIN
INJECTION PRESSURE : 200 PSI TO 800 PSI
CLASS II

	QUANTITY NO. UNITS	UNIT MEAS	MATERIAL PER UNIT	MATERIAL TOTAL	LABOR PER UNIT	LABOR TOTAL	TOTAL COST
VALVES							
PLASTIC	50	EA	528	26400	72	3600	30,000
STEEL ANSI 300	8	EA	1920	15360	240	1920	17,280
PIPE							
PLASTIC	800	FT	24	19200	10.8	8640	27,840
STEEL SCH. 40	200	FT	28.8	5760	18	3600	9,360
TANKS							
FIBERGLASS							
500 BBL	3	EA	13500	40500	2790	8370	48,870
1000 BBL	2	EA	32100	64200	8400	16800	81,000
COATED STEEL							
5000 BBL	2	EA	84000	168000	42000	84000	252,000
METERS	2	EA	4560	9120	720	1440	10,560
CHEMICAL SYSTEM							
TANKS	4	EA	1440	5760	360	1440	7,200
PUMPS	4	EA	720	2880	120	480	3,360
S.S. TUBING	160	FT	3.6	576	3.6	576	1,152
PUMPS							
CENTRIFUGAL	6	EA	2400	14400	480	2880	17,280
POSITIVE DISPL.	2	EA	60000	120000	7200	14400	134,400
FILTERS	4	EA	10560	42240	1440	5760	48,000
FITTINGS, PRESS. GAGES, MISC.				20% OF EQUIPMENT COST			137,660
SITE WORK, BUILDINGS						60000	60,000
OVERHEAD & PROFIT 15%							132,894
						TOTAL	$1,018,857

BASIN :NORHT SLOPE
INJECTION PRESSURE : 800 PSI AND ABOVE
CLASS II

	QUANTITY NO. UNITS	UNIT MEAS	MATERIAL PER UNIT	TOTAL	LABOR PER UNIT	TOTAL	TOTAL COST
VALVES							
PLASTIC	50	EA	1848	92400	252	12600	105,000
S.S. ANSI 600	8	EA	33810	270480	840	6720	277,200
PIPE							
PLASTIC	800	FT	84	67200	37.8	30240	97,440
S.S. SCH. 80	200	FT	630	126000	84	16800	142,800
TANKS							
FIBERGLASS							
500 BBL	7	EA	47250	330750	9765	68355	399,105
1000 BBL	4	EA	112350	449400	29400	117600	567,000
COATED STEEL							
5000 BBL	2	EA	294000	588000	147000	294000	882,000
METERS	2	EA	15960	31920	2520	5040	36,960
CHEMICAL SYSTEM							
TANKS	4	EA	5040	20160	1260	5040	25,200
PUMPS	4	EA	2520	10080	420	1680	11,760
S.S. TUBING	160	FT	12.6	2016	12.6	2016	4,032
PUMPS							
CENTRIFUGAL	6	EA	8400	50400	1680	10080	60,480
POSITIVE DISPL.	2	EA	378000	756000	42000	84000	840,000
FILTERS	4	EA	36960	147840	5040	20160	168,000
FITTINGS, PRESS. GAGES, MIS .				20% OF EQUIPMENT COST			723,395
SITE WORK, BUILDINGS						210000	210,000
ANNULAR FLUID	120	BBL	147	17640	4.2	504	18,144
TANK	1	EA	5040	5040	1260	1260	6,300
OVERHEAD & PROFIT 15%							682,556
						TOTAL	$5,257,372

APPENDIX D

ANNUAL OPERATING COSTS FOR CLASS I AND CLASS II INJECTION WELLS

Prepared by Epps and Associates Consulting Engineers, Inc.

BASIN : APPALACHIAN
INJECTION PRESSURE : 800 PSI AND ABOVE
CLASS I

ANNUAL OPERATING COSTS

	QUANTITY NO. UNITS	UNIT MEAS	MATERIAL PER UNIT	MATERIAL TOTAL	LABOR PER UNIT	LABOR TOTAL	TOTAL COST ANNUAL
MANPOWER							
OPERATORS	5	EA			40000	200000	200,000
CHEMICALS							
CORROSION	100	BBL	294	29400			29,400
O2 SCAVENGER	100	BBL	336	33600			33,600
COAGULENT	20	BBL	294	5880			5,880
EMULSION BREAKER	80	BBL	294	23520			23,520
ELECTRICY			$/KWH				
PUMPS							
CENTRIFUGAL	50	KW	0.11	47300			47,300
POSITIVE DISPL.	200	KW	0.11	189200			189,200
MISC.	10	KW	0.11	9460			9,460
(EQUIPMENT OPERATES 8600 HRS/YR)							
FILTERS	5324	EA	9.5	50578			50,578
SOLIDS TRUCKING	2	LOADS			3500	7000	7,000
MAINTENANCE	1	MISC.	200	200	800	800	1,000
PUMPS							
CENTRIFUGAL	50	HP	10	500	20	1000	1,500
POSITIVE DISPL.	200	HP	10	2000	20	4000	6,000
WELL COST							
PRESS. TEST	1	EA	10000	10000		0	10,000
TRACER SURVEY	1	EA	10000	10000		0	10,000
CEMENT BOND LOG	0.2	/YR	10000	2000			2,000
PIPE EVALUATION	0.2	/YR	10000	2000			2,000
(THESE COSTS OCCUR ONCE EVERY 5 YEARS)							
(AS REQUIRED BY EPA REGULATIONS)							
						TOTAL	$629,438

BASIN : MISSISSIPPI SALT DOME
INJECTION PRESSURE : 800 PSI AND ABOVE
CLASS I

ANNUAL OPERATING COSTS

	QUANTITY NO. UNITS	UNIT MEAS	MATERIAL PER UNIT	TOTAL	LABOR PER UNIT	TOTAL	TOTAL COST ANNUAL
MANPOWER							
OPERATORS	5	EA			40000	200000	200,000
CHEMICALS							
CORROSION	100	BBL	294	29400			29,400
O2 SCAVENGER	100	BBL	336	33600			33,600
COAGULENT	20	BBL	294	5880			5,880
EMULSION BREAKER	80	BBL	294	23520			23,520
ELECTRICY			$/KWH				
PUMPS							
CENTRIFUGAL	50	KW	0.086	36980			36,980
POSITIVE DISPL.	200	KW	0.086	147920			147,920
MISC.	10	KW	0.086	7396			7,396
(EQUIPMENT OPERATES 8600 HRS/YR)							
FILTERS	5324	EA	9.5	50578			50,578
SOLIDS TRUCKING	2	LOADS			3500	7000	7,000
MAINTENANCE	1	MISC.	200	200	800	800	1,000
PUMPS							
CENTRIFUGAL	50	HP	10	500	20	1000	1,500
POSITIVE DISPL.	200	HP	10	2000	20	4000	6,000
WELL COST							
PRESS. TEST	1	EA	10000	10000		0	10,000
TRACER SURVEY	1	EA	10000	10000		0	10,000
CEMENT BOND LOG	0.2	/YR	10000	2000			2,000
PIPE EVALUATION	0.2	/YR	10000	2000			2,000
(THESE COSTS OCCUR ONCE EVERY 5 YEARS)							
(AS REQUIRED BY EPA REGULATIONS)							
						TOTAL	$574,774

BASIN : ARKLA
INJECTION PRESSURE : BELOW 200 PSI
CLASS I

ANNUAL OPERATING COSTS

	QUANTITY NO. UNITS	UNIT MEAS	MATERIAL PER UNIT	TOTAL	LABOR PER UNIT	TOTAL	TOTAL COST ANNUAL
MANPOWER							
OPERATORS	5	EA			40000	200000	200,000
CHEMICALS							
CORROSION	100	BBL	294	29400			29,400
O2 SCAVENGER	100	BBL	336	33600			33,600
COAGULENT	20	BBL	294	5880			5,880
EMULSION BREAKER	80	BBL	294	23520			23,520
ELECTRICY			$/KWH				
PUMPS							
CENTRIFUGAL	50	KW	0.086	36980			36,980
POSITIVE DISPL.	20	KW	0.086	14792			14,792
MISC.	10	KW	0.086	7396			7,396
(EQUIPMENT OPERATES 8600 HRS/YR)							
FILTERS	5324	EA	9.5	50578			50,578
SOLIDS TRUCKING	2	LOADS			3500	7000	7,000
MAINTENANCE	1	MISC.	200	200	800	800	1,000
PUMPS							
CENTRIFUGAL	50	HP	10	500	20	1000	1,500
POSITIVE DISPL.	20	HP	10	200	20	400	600
WELL COST							
PRESS. TEST	1	EA	10000	10000		0	10,000
TRACER SURVEY	1	EA	10000	10000		0	10,000
CEMENT BOND LOG	0.2	/YR	10000	2000			2,000
PIPE EVALUATION	0.2	/YR	10000	2000			2,000
(THESE COSTS OCCUR ONCE EVERY 5 YEARS)							
(AS REQUIRED BY EPA REGULATIONS)							
						TOTAL	$436,246

BASIN : MICHIGAN
INJECTION PRESSURE : 200 PSI TO 800 PSI
CLASS I

ANNUAL OPERATING COSTS

	QUANTITY NO. UNITS	UNIT MEAS	MATERIAL PER UNIT	MATERIAL TOTAL	LABOR PER UNIT	LABOR TOTAL	TOTAL COST ANNUAL
MANPOWER							
OPERATORS	5	EA			40000	200000	200,000
CHEMICALS							
CORROSION	100	BBL	294	29400			29,400
O2 SCAVENGER	100	BBL	336	33600			33,600
COAGULENT	20	BBL	294	5880			5,880
EMULSION BREAKER	80	BBL	294	23520			23,520
ELECTRICY			$/KWH				
PUMPS							
CENTRIFUGAL	50	KW	0.1	43000			43,000
POSITIVE DISPL.	100	KW	0.1	86000			86,000
MISC.	10	KW	0.1	8600			8,600
(EQUIPMENT OPERATES 8600 HRS/YR)							
FILTERS	5324	EA	9.5	50578			50,578
SOLIDS TRUCKING	2	LOADS			3500	7000	7,000
MAINTENANCE	1	MISC.	200	200	800	800	1,000
PUMPS							
CENTRIFUGAL	50	HP	10	500	20	1000	1,500
POSITIVE DISPL.	100	HP	10	1000	20	2000	3,000
WELL COST							
PRESS. TEST	1	EA	10000	10000		0	10,000
TRACER SURVEY	1	EA	10000	10000		0	10,000
CEMENT BOND LOG	0.2	/YR	10000	2000			2,000
PIPE EVALUATION	0.2	/YR	10000	2000			2,000
(THESE COSTS OCCUR ONCE EVERY 5 YEARS)							
(AS REQUIRED BY EPA REGULATIONS)							
						TOTAL	$517,078

BASIN : ILLINOIS
INJECTION PRESSURE : BELOW 200 PSI
CLASS I

ANNUAL OPERATING COSTS

	QUANTITY NO. UNITS	UNIT MEAS	MATERIAL PER UNIT	TOTAL	LABOR PER UNIT	TOTAL	TOTAL COST ANNUAL
MANPOWER							
OPERATORS	5	EA			40000	200000	200,000
CHEMICALS							
CORROSION	100	BBL	294	29400			29,400
O2 SCAVENGER	100	BBL	336	33600			33,600
COAGULENT	20	BBL	294	5880			5,880
EMULSION BREAKER	80	BBL	294	23520			23,520
ELECTRICY			$/KWH				
PUMPS							
CENTRIFUGAL	50	KW	0.095	40850			40,850
POSITIVE DISPL.	20	KW	0.095	16340			16,340
MISC.	10	KW	0.095	8170			8,170
(EQUIPMENT OPERATES 8600 HRS/YR)							
FILTERS	5324	EA	9.5	50578			50,578
SOLIDS TRUCKING	2	LOADS			3500	7000	7,000
MAINTENANCE	1	MISC.	200	200	800	800	1,000
PUMPS							
CENTRIFUGAL	50	HP	10	500	20	1000	1,500
POSITIVE DISPL.	20	HP	10	200	20	400	600
WELL COST							
PRESS. TEST	1	EA	10000	10000		0	10,000
TRACER SURVEY	1	EA	10000	10000		0	10,000
CEMENT BOND LOG	0.2	/YR	10000	2000			2,000
PIPE EVALUATION	0.2	/YR	10000	2000			2,000
(THESE COSTS OCCUR ONCE EVERY 5 YEARS)							
(AS REQUIRED BY EPA REGULATIONS)							
						TOTAL	$442,438

BASIN : WILLISTON
INJECTION PRESSURE : 200 PSI TO 800 PSI
CLASS I

ANNUAL OPERATING COSTS

	QUANTITY NO. UNITS	UNIT MEAS	MATERIAL PER UNIT	MATERIAL TOTAL	LABOR PER UNIT	LABOR TOTAL	TOTAL COST ANNUAL
MANPOWER							
OPERATORS	5	EA			40000	200000	200,000
CHEMICALS							
CORROSION	100	BBL	294	29400			29,400
O2 SCAVENGER	100	BBL	336	33600			33,600
COAGULENT	20	BBL	294	5880			5,880
EMULSION BREAKER	80	BBL	294	23520			23,520
ELECTRICY			$/KWH				
PUMPS							
CENTRIFUGAL	50	KW	0.06	25800			25,800
POSITIVE DISPL.	100	KW	0.06	51600			51,600
MISC.	10	KW	0.06	5160			5,160
(EQUIPMENT OPERATES 8600 HRS/YR)							
FILTERS	5324	EA	9.5	50578			50,578
SOLIDS TRUCKING	2	LOADS			3500	7000	7,000
MAINTENANCE	1	MISC.	200	200	800	800	1,000
PUMPS							
CENTRIFUGAL	50	HP	10	500	20	1000	1,500
POSITIVE DISPL.	100	HP	10	1000	20	2000	3,000
WELL COST							
PRESS. TEST	1	EA	10000	10000		0	10,000
TRACER SURVEY	1	EA	10000	10000		0	10,000
CEMENT BOND LOG	0.2	/YR	10000	2000			2,000
PIPE EVALUATION	0.2	/YR	10000	2000			2,000
(THESE COSTS OCCUR ONCE EVERY 5 YEARS)							
(AS REQUIRED BY EPA REGULATIONS)							
						TOTAL	$462,033

BASIN : HUGOTON
INJECTION PRESSURE : BELOW 200 PSI
CLASS I

ANNUAL OPERATING COSTS

	QUANTITY NO. UNITS	UNIT MEAS	MATERIAL PER UNIT	MATERIAL TOTAL	LABOR PER UNIT	LABOR TOTAL	TOTAL COST ANNUAL
MANPOWER							
OPERATORS	5	EA			40000	200000	200,000
CHEMICALS							
CORROSION	100	BBL	294	29400			29,400
O2 SCAVENGER	100	BBL	336	33600			33,600
COAGULENT	20	BBL	294	5880			5,880
EMULSION BREAKER	80	BBL	294	23520			23,520
ELECTRICY			$/KWH				
PUMPS							
CENTRIFUGAL	50	KW	0.07	30100			30,100
POSITIVE DISPL.	20	KW	0.07	12040			12,040
MISC.	10	KW	0.07	6020			6,020
(EQUIPMENT OPERATES 8600 HRS/YR)							
FILTERS	5324	EA	9.5	50578			50,578
SOLIDS TRUCKING	2	LOADS			3500	7000	7,000
MAINTENANCE	1	MISC.	200	200	800	800	1,000
PUMPS							
CENTRIFUGAL	50	HP	10	500	20	1000	1,500
POSITIVE DISPL.	20	HP	10	200	20	400	600
WELL COST							
PRESS. TEST	1	EA	10000	10000		0	10,000
TRACER SURVEY	1	EA	10000	10000		0	10,000
CEMENT BOND LOG	0.2	/YR	10000	2000			2,000
PIPE EVALUATION	0.2	/YR	10000	2000			2,000
(THESE COSTS OCCUR ONCE EVERY 5 YEARS)							
(AS REQUIRED BY EPA REGULATIONS)							
						TOTAL	$425,238

BASIN : PERMIAN
INJECTION PRESSURE : 200 PSI TO 800 PSI
CLASS I

ANNUAL OPERATING COSTS

	QUANTITY NO. UNITS	UNIT MEAS	MATERIAL PER UNIT	TOTAL	LABOR PER UNIT	TOTAL	TOTAL COST ANNUAL
MANPOWER							
OPERATORS	5	EA			40000	200000	200,000
CHEMICALS							
CORROSION	100	BBL	294	29400			29,400
O2 SCAVENGER	100	BBL	336	33600			33,600
COAGULENT	20	BBL	294	5880			5,880
EMULSION BREAKER	80	BBL	294	23520			23,520
ELECTRICY			$/KWH				
PUMPS							
CENTRIFUGAL	50	KW	0.07	30100			30,100
POSITIVE DISPL.	100	KW	0.07	60200			60,200
MISC.	10	KW	0.07	6020			6,020
(EQUIPMENT OPERATES 8600 HRS/YR)							
FILTERS	5324	EA	9.5	50578			50,578
SOLIDS TRUCKING	2	LOADS			3500	7000	7,000
MAINTENANCE	1	MISC.	200	200	800	800	1,000
PUMPS							
CENTRIFUGAL	50	HP	10	500	20	1000	1,500
POSITIVE DISPL.	100	HP	10	1000	20	2000	3,000
WELL COST							
PRESS. TEST	1	EA	10000	10000		0	10,000
TRACER SURVEY	1	EA	10000	10000		0	10,000
CEMENT BOND LOG	0.2	/YR	10000	2000			2,000
PIPE EVALUATION	0.2	/YR	10000	2000			2,000
(THESE COSTS OCCUR ONCE EVERY 5 YEARS)							
(AS REQUIRED BY EPA REGULATIONS)							
						TOTAL	$475,798

BASIN : ANADARKO
INJECTION PRESSURE : 200 PSI AND ABOVE
CLASS I

ANNUAL OPERATING COSTS

	QUANTITY NO. UNITS	UNIT MEAS	MATERIAL PER UNIT	TOTAL	LABOR PER UNIT	TOTAL	TOTAL COST ANNUAL
MANPOWER							
OPERATORS	5	EA			40000	200000	200,000
CHEMICALS							
CORROSION	100	BBL	294	29400			29,400
O2 SCAVENGER	100	BBL	336	33600			33,600
COAGULENT	20	BBL	294	5880			5,880
EMULSION BREAKER	80	BBL	294	23520			23,520
ELECTRICY			$/KWH				
PUMPS							
CENTRIFUGAL	50	KW	0.06	25800			25,800
POSITIVE DISPL.	200	KW	0.06	103200			103,200
MISC.	10	KW	0.06	5160			5,160
(EQUIPMENT OPERATES 8600 HRS/YR)							
FILTERS	5324	EA	9.5	50578			50,578
SOLIDS TRUCKING	2	LOADS			3500	7000	7,000
MAINTENANCE	1	MISC.	200	200	800	800	1,000
PUMPS							
CENTRIFUGAL	50	HP	10	500	20	1000	1,500
POSITIVE DISPL.	200	HP	10	2000	20	4000	6,000
WELL COST							
PRESS. TEST	1	EA	10000	10000		0	10,000
TRACER SURVEY	1	EA	10000	10000		0	10,000
CEMENT BOND LOG	0.2	/YR	10000	2000			2,000
PIPE EVALUATION	0.2	/YR	10000	2000			2,000
(THESE COSTS OCCUR ONCE EVERY 5 YEARS)							
(AS REQUIRED BY EPA REGULATIONS)							
						TOTAL	$516,633

BASIN : GULF COAST SALT DOME
INJECTION PRESSURE : 200 PSI TO 800 PSI
CLASS I

ANNUAL OPERATING COSTS

	QUANTITY NO. UNITS	UNIT MEAS	MATERIAL PER UNIT	MATERIAL TOTAL	LABOR PER UNIT	LABOR TOTAL	TOTAL COST ANNUAL
MANPOWER							
OPERATORS	5	EA			40000	200000	200,000
CHEMICALS							
CORROSION	100	BBL	294	29400			29,400
O2 SCAVENGER	100	BBL	336	33600			33,600
COAGULENT	20	BBL	294	5880			5,880
EMULSION BREAKER	80	BBL	294	23520			23,520
ELECTRICY			$/KWH				
PUMPS							
CENTRIFUGAL	50	KW	0.07	30100			30,100
POSITIVE DISPL.	100	KW	0.07	60200			60,200
MISC.	10	KW	0.07	6020			6,020
(EQUIPMENT OPERATES 8600 HRS/YR)							
FILTERS	5324	EA	9.5	50578			50,578
SOLIDS TRUCKING	2	LOADS			3500	7000	7,000
MAINTENANCE	1	MISC.	200	200	800	800	1,000
PUMPS							
CENTRIFUGAL	50	HP	10	500	20	1000	1,500
POSITIVE DISPL.	100	HP	10	1000	20	2000	3,000
WELL COST							
PRESS. TEST	1	EA	10000	10000		0	10,000
TRACER SURVEY	1	EA	10000	10000		0	10,000
CEMENT BOND LOG	0.2	/YR	10000	2000			2,000
PIPE EVALUATION	0.2	/YR	10000	2000			2,000
(THESE COSTS OCCUR ONCE EVERY 5 YEARS)							
(AS REQUIRED BY EPA REGULATIONS)							
						TOTAL	$475,798

BASIN : POWDER RIVER
INJECTION PRESSURE : 800 PSI AND ABOVE
CLASS I

ANNUAL OPERATING COSTS

	QUANTITY NO. UNITS	UNIT MEAS	MATERIAL PER UNIT	MATERIAL TOTAL	LABOR PER UNIT	LABOR TOTAL	TOTAL COST ANNUAL
MANPOWER							
OPERATORS	5	EA			40000	200000	200,000
CHEMICALS							
CORROSION	100	BBL	294	29400			29,400
O2 SCAVENGER	100	BBL	336	33600			33,600
COAGULENT	20	BBL	294	5880			5,880
EMULSION BREAKER	80	BBL	294	23520			23,520
ELECTRICY			$/KWH				
PUMPS							
CENTRIFUGAL	50	KW	0.05	21500			21,500
POSITIVE DISPL.	200	KW	0.05	86000			86,000
MISC.	10	KW	0.05	4300			4,300
(EQUIPMENT OPERATES 8600 HRS/YR)							
FILTERS	5324	EA	9.5	50578			50,578
SOLIDS TRUCKING	2	LOADS			3500	7000	7,000
MAINTENANCE	1	MISC.	200	200	800	800	1,000
PUMPS							
CENTRIFUGAL	50	HP	10	500	20	1000	1,500
POSITIVE DISPL.	200	HP	10	2000	20	4000	6,000
WELL COST							
PRESS. TEST	1	EA	10000	10000		0	10,000
TRACER SURVEY	1	EA	10000	10000		0	10,000
CEMENT BOND LOG	0.2	/YR	10000	2000			2,000
PIPE EVALUATION	0.2	/YR	10000	2000			2,000
(THESE COSTS OCCUR ONCE EVERY 5 YEARS)							
(AS REQUIRED BY EPA REGULATIONS)							
						TOTAL	$494,278

BASIN : SAN JUAN
INJECTION PRESSURE : 800 PSI AND ABOVE
CLASS I

ANNUAL OPERATING COSTS

	QUANTITY NO. UNITS	UNIT MEAS	MATERIAL PER UNIT	MATERIAL TOTAL	LABOR PER UNIT	LABOR TOTAL	TOTAL COST ANNUAL
MANPOWER							
OPERATORS	5	EA			40000	200000	200,000
CHEMICALS							
CORROSION	100	BBL	294	29400			29,400
O2 SCAVENGER	100	BBL	336	33600			33,600
COAGULENT	20	BBL	294	5880			5,880
EMULSION BREAKER	80	BBL	294	23520			23,520
ELECTRICY			$/KWH				
PUMPS							
CENTRIFUGAL	50	KW	0.06	25800			25,800
POSITIVE DISPL.	200	KW	0.06	103200			103,200
MISC.	10	KW	0.06	5160			5,160
(EQUIPMENT OPERATES 8600 HRS/YR)							
FILTERS	5324	EA	9.5	50578			50,578
SOLIDS TRUCKING	2	LOADS			3500	7000	7,000
MAINTENANCE	1	MISC.	200	200	800	800	1,000
PUMPS							
CENTRIFUGAL	50	HP	10	500	20	1000	1,500
POSITIVE DISPL.	200	HP	10	2000	20	4000	6,000
WELL COST							
PRESS. TEST	1	EA	10000	10000		0	10,000
TRACER SURVEY	1	EA	10000	10000		0	10,000
CEMENT BOND LOG	0.2	/YR	10000	2000			2,000
PIPE EVALUATION	0.2	/YR	10000	2000			2,000
(THESE COSTS OCCUR ONCE EVERY 5 YEARS)							
(AS REQUIRED BY EPA REGULATIONS)							
						TOTAL	$516,633

BASIN : DENVER - JULESBURG
INJECTION PRESSURE : 800 PSI AND ABOVE
CLASS I

ANNUAL OPERATING COSTS

	QUANTITY NO. UNITS	UNIT MEAS	MATERIAL PER UNIT	TOTAL	LABOR PER UNIT	TOTAL	TOTAL COST ANNUAL
MANPOWER							
OPERATORS	5	EA			40000	200000	200,000
CHEMICALS							
CORROSION	100	BBL	294	29400			29,400
O2 SCAVENGER	100	BBL	336	33600			33,600
COAGULENT	20	BBL	294	5880			5,880
EMULSION BREAKER	80	BBL	294	23520			23,520
ELECTRICY			$/KWH				
PUMPS							
CENTRIFUGAL	50	KW	0.07	30100			30,100
POSITIVE DISPL.	200	KW	0.07	120400			120,400
MISC.	10	KW	0.07	6020			6,020
(EQUIPMENT OPERATES 8600 HRS/YR)							
FILTERS	5324	EA	9.5	50578			50,578
SOLIDS TRUCKING	2	LOADS			3500	7000	7,000
MAINTENANCE	1	MISC.	200	200	800	800	1,000
PUMPS							
CENTRIFUGAL	50	HP	10	500	20	1000	1,500
POSITIVE DISPL.	200	HP	10	2000	20	4000	6,000
WELL COST							
PRESS. TEST	1	EA	10000	10000		0	10,000
TRACER SURVEY	1	EA	10000	10000		0	10,000
CEMENT BOND LOG	0.2	/YR	10000	2000			2,000
PIPE EVALUATION	0.2	/YR	10000	2000			2,000
(THESE COSTS OCCUR ONCE EVERY 5 YEARS)							
(AS REQUIRED BY EPA REGULATIONS)							
						TOTAL	$538,993

BASIN : SAN JOAQUIN
INJECTION PRESSURE : 200 PSI TO 800 PSI
CLASS I

ANNUAL OPERATING COSTS

	QUANTITY NO. UNITS	UNIT MEAS	MATERIAL PER UNIT	TOTAL	LABOR PER UNIT	TOTAL	TOTAL COST ANNUAL
MANPOWER							
OPERATORS	5	EA			40000	200000	200,000
CHEMICALS							
CORROSION	100	BBL	294	29400			29,400
O2 SCAVENGER	100	BBL	336	33600			33,600
COAGULENT	20	BBL	294	5880			5,880
EMULSION BREAKER	80	BBL	294	23520			23,520
ELECTRICY			$/KWH				
PUMPS							
CENTRIFUGAL	50	KW	0.09	38700			38,700
POSITIVE DISPL.	100	KW	0.09	77400			77,400
MISC.	10	KW	0.09	7740			7,740
(EQUIPMENT OPERATES 8600 HRS/YR)							
FILTERS	5324	EA	9.5	50578			50,578
SOLIDS TRUCKING	2	LOADS			3500	7000	7,000
MAINTENANCE	1	MISC.	200	200	800	800	1,000
PUMPS							
CENTRIFUGAL	50	HP	10	500	20	1000	1,500
POSITIVE DISPL.	100	HP	10	1000	20	2000	3,000
WELL COST							
PRESS. TEST	1	EA	10000	10000		0	10,000
TRACER SURVEY	1	EA	10000	10000		0	10,000
CEMENT BOND LOG	0.2	/YR	10000	2000			2,000
PIPE EVALUATION	0.2	/YR	10000	2000			2,000
(THESE COSTS OCCUR ONCE EVERY 5 YEARS)							
(AS REQUIRED BY EPA REGULATIONS)							
						TOTAL	$503,313

BASIN : NORTH SLOPE
INJECTION PRESSURE : 800 PSI AND ABOVE
CLASS I

ANNUAL OPERATING COSTS

	QUANTITY NO. UNITS	UNIT MEAS	MATERIAL PER UNIT	MATERIAL TOTAL	LABOR PER UNIT	LABOR TOTAL	TOTAL COST ANNUAL
MANPOWER							
OPERATORS	5	EA			140000	700000	700,000
CHEMICALS							
CORROSION	100	BBL	940	94000			94,000
O2 SCAVENGER	100	BBL	982	98200			98,200
COAGULENT	20	BBL	940	18800			18,800
EMULSION BREAKER	80	BBL	940	75200			75,200
FUEL			$/MCF				
PUMPS							
CENTRIFUGAL	50	HP	6	20640			20,640
POSITIVE DISPL.	200	HP	6	82560			82,560
MISC.	10	HP	6	4128			4,128
(EQUIPMENT OPERATES 8600 HRS/YR)							
FILTERS	5324	EA	29.5	157058			157,058
SOLIDS SHIPPING	2	LOADS			35000	70000	70,000
MAINTENANCE	1	MISC.	600	600	3200	3200	3,800
PUMPS							
CENTRIFUGAL	50	HP	30	1500	80	4000	5,500
POSITIVE DISPL.	200	HP	30	6000	80	16000	22,000
WELL COST							
PRESS. TEST	1	EA	40000	40000		0	40,000
TRACER SURVEY	1	EA	40000	40000		0	40,000
CEMENT BOND LOG	0.2	/YR	40000	8000			8,000
PIPE EVALUATION	0.2	/YR	40000	8000			8,000
(THESE COSTS OCCUR ONCE EVERY 5 YEARS)							
(AS REQUIRED BY EPA REGULATIONS)							
						TOTAL	$1,447,886

BASIN : APPALACHIAN
INJECTION PRESSURE : 800 PSI AND ABOVE
CLASS II

ANNUAL OPERATING COSTS

	QUANTITY NO. UNITS	UNIT MEAS	MATERIAL PER UNIT	MATERIAL TOTAL	LABOR PER UNIT	LABOR TOTAL	TOTAL COST ANNUAL
MANPOWER							
OPERATORS	2	EA			40000	80000	80,000
CHEMICALS							
CORROSION	100	BBL	294	29400			29,400
O2 SCAVENGER	100	BBL	336	33600			33,600
COAGULENT	20	BBL	294	5880			5,880
EMULSION BREAKER	80	BBL	294	23520			23,520
ELECTRICY			$/KWH				
PUMPS							
CENTRIFUGAL	50	KW	0.11	47300			47,300
POSITIVE DISPL.	200	KW	0.11	189200			189,200
MISC.	10	KW	0.11	9460			9,460
(EQUIPMENT OPERATES 8600 HRS/YR)							
FILTERS	5324	EA	9.5	50578			50,578
SOLIDS TRUCKING	2	LOADS			700	1400	1,400
MAINTENANCE	1	MISC.	200	200	800	800	1,000
PUMPS							
CENTRIFUGAL	50	HP	10	500	20	1000	1,500
POSITIVE DISPL.	200	HP	10	2000	20	4000	6,000
WELL COST							
PRESS. TEST	0.2	EA	10000	2000		0	2,000
					TOTAL		$480,233

BASIN : MISSISSIPPI SALT DOME
INJECTION PRESSURE : 800 PSI AND ABOVE
CLASS II

ANNUAL OPERATING COSTS

	QUANTITY NO. UNITS	UNIT MEAS	MATERIAL PER UNIT	TOTAL	LABOR PER UNIT	TOTAL	TOTAL COST ANNUAL
MANPOWER							
OPERATORS	2	EA			40000	80000	80,000
CHEMICALS							
CORROSION	100	BBL	294	29400			29,400
O2 SCAVENGER	100	BBL	336	33600			33,600
COAGULENT	20	BBL	294	5880			5,880
EMULSION BREAKER	80	BBL	294	23520			23,520
ELECTRICY			$/KWH				
PUMPS							
CENTRIFUGAL	50	KW	0.086	36980			36,980
POSITIVE DISPL.	200	KW	0.086	147920			147,920
MISC.	10	KW	0.086	7396			7,396
(EQUIPMENT OPERATES 8600 HRS/YR)							
FILTERS	5324	EA	9.5	50578			50,578
SOLIDS TRUCKING	2	LOADS			700	1400	1,400
MAINTENANCE	1	MISC.	200	200	800	800	1,000
PUMPS							
CENTRIFUGAL	50	HP	10	500	20	1000	1,500
POSITIVE DISPL.	200	HP	10	2000	20	4000	6,000
WELL COST							
PRESS. TEST	0.2	EA	10000	2000		0	2,000
						TOTAL	$427,174

BASIN : ARKLA
INJECTION PRESSURE : BELOW 200 PSI
CLASS II

ANNUAL OPERATING COSTS

	QUANTITY NO. UNITS	UNIT MEAS	MATERIAL PER UNIT	TOTAL	LABOR PER UNIT	TOTAL	TOTAL COST ANNUAL
MANPOWER							
OPERATORS	2	EA			40000	80000	80,000
CHEMICALS							
CORROSION	100	BBL	294	29400			29,400
O2 SCAVENGER	100	BBL	336	33600			33,600
COAGULENT	20	BBL	294	5880			5,880
EMULSION BREAKER	80	BBL	294	23520			23,520
ELECTRICY			$/KWH				
PUMPS							
CENTRIFUGAL	50	KW	0.086	36980			36,980
POSITIVE DISPL.	20	KW	0.086	14792			14,792
MISC.	10	KW	0.086	7396			7,396
(EQUIPMENT OPERATES 8600 HRS/YR)							
FILTERS	5324	EA	9.5	50578			50,578
SOLIDS TRUCKING	2	LOADS			700	1400	1,400
MAINTENANCE	1	MISC.	200	200	800	800	1,000
PUMPS							
CENTRIFUGAL	50	HP	10	500	20	1000	1,500
POSITIVE DISPL.	20	HP	10	200	20	400	600
WELL COST							
PRESS. TEST	0.2	EA	10000	2000		0	2,000
						TOTAL	$288,648

BASIN : MICHIGAN
INJECTION PRESSURE : 200 PSI TO 800 PSI
CLASS II

ANNUAL OPERATING COSTS

	QUANTITY NO. UNITS	UNIT MEAS	MATERIAL PER UNIT	MATERIAL TOTAL	LABOR PER UNIT	LABOR TOTAL	TOTAL COST ANNUAL
MANPOWER							
OPERATORS	2	EA			40000	80000	80,000
CHEMICALS							
CORROSION	100	BBL	294	29400			29,400
O2 SCAVENGER	100	BBL	336	33600			33,600
COAGULENT	20	BBL	294	5880			5,880
EMULSION BREAKER	80	BBL	294	23520			23,520
ELECTRICY			$/KWH				
PUMPS							
CENTRIFUGAL	50	KW	0.1	43000			43,000
POSITIVE DISPL.	100	KW	0.1	86000			86,000
MISC.	10	KW	0.1	8600			8,600
(EQUIPMENT OPERATES 8600 HRS/YR)							
FILTERS	5324	EA	9.5	50578			50,578
SOLIDS TRUCKING	2	LOADS			700	1400	1,400
MAINTENANCE	1	MISC.	200	200	800	800	1,000
PUMPS							
CENTRIFUGAL	50	HP	10	500	20	1000	1,500
POSITIVE DISPL.	100	HP	10	1000	20	2000	3,000
WELL COST							
PRESS. TEST	0.2	EA	10000	2000		0	2,000

TOTAL $369,478

BASIN : ILLINOIS
INJECTION PRESSURE : BELOW 200 PSI
CLASS II

ANNUAL OPERATING COSTS

	QUANTITY NO. UNITS	UNIT MEAS	MATERIAL PER UNIT	MATERIAL TOTAL	LABOR PER UNIT	LABOR TOTAL	TOTAL COST ANNUAL
MANPOWER							
OPERATORS	2	EA			40000	80000	80,000
CHEMICALS							
CORROSION	100	BBL	294	29400			29,400
O2 SCAVENGER	100	BBL	336	33600			33,600
COAGULENT	20	BBL	294	5880			5,880
EMULSION BREAKER	80	BBL	294	23520			23,520
ELECTRICY		$/KWH					
PUMPS							
CENTRIFUGAL	50	KW	0.095	40850			40,850
POSITIVE DISPL.	20	KW	0.095	16340			16,340
MISC.	10	KW	0.095	8170			8,170
(EQUIPMENT OPERATES 8600 HRS/YR)							
FILTERS	5324	EA	9.5	50578			50,578
SOLIDS TRUCKING	2	LOADS			700	1400	1,400
MAINTENANCE	1	MISC.	200	200	800	800	1,000
PUMPS							
CENTRIFUGAL	50	HP	10	500	20	1000	1,500
POSITIVE DISPL.	20	HP	10	200	20	400	600
WELL COST							
PRESS. TEST	0.2	EA	10000	2000		0	2,000
						TOTAL	$294,838

BASIN : WILLISTON
INJECTION PRESSURE : 200 PSI TO 800 PSI
CLASS II

ANNUAL OPERATING COSTS

	QUANTITY NO. UNITS	UNIT MEAS	MATERIAL PER UNIT	MATERIAL TOTAL	LABOR PER UNIT	LABOR TOTAL	TOTAL COST ANNUAL
MANPOWER							
OPERATORS	2	EA			40000	80000	80,000
CHEMICALS							
CORROSION	100	BBL	294	29400			29,400
O2 SCAVENGER	100	BBL	336	33600			33,600
COAGULENT	20	BBL	294	5880			5,880
EMULSION BREAKER	80	BBL	294	23520			23,520
ELECTRICY			$/KWH				
PUMPS							
CENTRIFUGAL	50	KW	0.06	25800			25,800
POSITIVE DISPL.	100	KW	0.06	51600			51,600
MISC.	10	KW	0.06	5160			5,160
(EQUIPMENT OPERATES 8600 HRS/YR)							
FILTERS	5324	EA	9.5	50578			50,578
SOLIDS TRUCKING	2	LOADS			700	1400	1,400
MAINTENANCE	1	MISC.	200	200	800	800	1,000
PUMPS							
CENTRIFUGAL	50	HP	10	500	20	1000	1,500
POSITIVE DISPL.	100	HP	10	1000	20	2000	3,000
WELL COST							
PRESS. TEST	0.2	EA	10000	2000		0	2,000
						TOTAL	$314,438

BASIN : HUGOTON
INJECTION PRESSURE : BELOW 200 PSI
CLASS II

ANNUAL OPERATING COSTS

	QUANTITY NO. UNITS	UNIT MEAS	MATERIAL PER UNIT	MATERIAL TOTAL	LABOR PER UNIT	LABOR TOTAL	TOTAL COST ANNUAL
MANPOWER							
OPERATORS	2	EA			40000	80000	80,000
CHEMICALS							
CORROSION	100	BBL	294	29400			29,400
O2 SCAVENGER	100	BBL	336	33600			33,600
COAGULENT	20	BBL	294	5880			5,880
EMULSION BREAKER	80	BBL	294	23520			23,520
ELECTRICY			$/KWH				
PUMPS							
CENTRIFUGAL	50	KW	0.07	30100			30,100
POSITIVE DISPL.	20	KW	0.07	12040			12,040
MISC.	10	KW	0.07	6020			6,020
(EQUIPMENT OPERATES 8600 HRS/YR)							
FILTERS	5324	EA	9.5	50578			50,578
SOLIDS TRUCKING	2	LOADS			700	1400	1,400
MAINTENANCE	1	MISC.	200	200	800	800	1,000
PUMPS							
CENTRIFUGAL	50	HP	10	500	20	1000	1,500
POSITIVE DISPL.	20	HP	10	200	20	400	600
WELL COST							
PRESS. TEST	0.2	EA	10000	2000		0	2,000
						TOTAL	$277,638

BASIN : PERMIAN
INJECTION PRESSURE : 200 PSI TO 800 PSI
CLASS II

ANNUAL OPERATING COSTS

	QUANTITY NO. UNITS	UNIT MEAS	MATERIAL PER UNIT	TOTAL	LABOR PER UNIT	TOTAL	TOTAL COST ANNUAL
MANPOWER							
OPERATORS	2	EA			40000	80000	80,000
CHEMICALS							
CORROSION	100	BBL	294	29400			29,400
O2 SCAVENGER	100	BBL	336	33600			33,600
COAGULENT	20	BBL	294	5880			5,880
EMULSION BREAKER	80	BBL	294	23520			23,520
ELECTRICY			$/KWH				
PUMPS							
CENTRIFUGAL	50	KW	0.07	30100			30,100
POSITIVE DISPL.	100	KW	0.07	60200			60,200
MISC.	10	KW	0.07	6020			6,020
(EQUIPMENT OPERATES 8600 HRS/YR)							
FILTERS	5324	EA	9.5	50578			50,578
SOLIDS TRUCKING	2	LOADS			700	1400	1,400
MAINTENANCE	1	MISC.	200	200	800	800	1,000
PUMPS							
CENTRIFUGAL	50	HP	10	500	20	1000	1,500
POSITIVE DISPL.	100	HP	10	1000	20	2000	3,000
WELL COST							
PRESS. TEST	0.2	EA	10000	2000		0	2,000

TOTAL $328,198

BASIN : ANADARKO
INJECTION PRESSURE : 800 PSI AND ABOVE
CLASS II

ANNUAL OPERATING COSTS

	QUANTITY NO. UNITS	UNIT MEAS	MATERIAL PER UNIT	TOTAL	LABOR PER UNIT	TOTAL	TOTAL COST ANNUAL
MANPOWER							
OPERATORS	2	EA			40000	80000	80,000
CHEMICALS							
CORROSION	100	BBL	294	29400			29,400
O2 SCAVENGER	100	BBL	336	33600			33,600
COAGULENT	20	BBL	294	5880			5,880
EMULSION BREAKER	80	BBL	294	23520			23,520
ELECTRICY			$/KWH				
PUMPS							
CENTRIFUGAL	50	KW	0.06	25800			25,800
POSITIVE DISPL.	200	KW	0.06	103200			103,200
MISC.	10	KW	0.06	5160			5,160
(EQUIPMENT OPERATES 8600 HRS/YR)							
FILTERS	5324	EA	9.5	50578			50,578
SOLIDS TRUCKING	2	LOADS			700	1400	1,400
MAINTENANCE	1	MISC.	200	200	800	800	1,000
PUMPS							
CENTRIFUGAL	50	HP	10	500	20	1000	1,500
POSITIVE DISPL.	200	HP	10	2000	20	4000	6,000
WELL COST							
PRESS. TEST	0.2	EA	10000	2000		0	2,000

TOTAL $369,038

BASIN : GULF COAST SALT DOME
INJECTION PRESSURE : 200 PSI TO 800 PSI
CLASS II

ANNUAL OPERATING COSTS

	QUANTITY NO. UNITS	UNIT MEAS	MATERIAL PER UNIT	TOTAL	LABOR PER UNIT	TOTAL	TOTAL COST ANNUAL
MANPOWER							
OPERATORS	2	EA			40000	80000	80,000
CHEMICALS							
CORROSION	100	BBL	294	29400			29,400
O2 SCAVENGER	100	BBL	336	33600			33,600
COAGULENT	20	BBL	294	5880			5,880
EMULSION BREAKER	80	BBL	294	23520			23,520
ELECTRICY			$/KWH				
PUMPS							
CENTRIFUGAL	50	KW	0.07	30100			30,100
POSITIVE DISPL.	100	KW	0.07	60200			60,200
MISC.	10	KW	0.07	6020			6,020
(EQUIPMENT OPERATES 8600 HRS/YR)							
FILTERS	5324	EA	9.5	50578			50,578
SOLIDS TRUCKING	2	LOADS			700	1400	1,400
MAINTENANCE	1	MISC.	200	200	800	800	1,000
PUMPS							
CENTRIFUGAL	50	HP	10	500	20	1000	1,500
POSITIVE DISPL.	100	HP	10	1000	20	2000	3,000
WELL COST							
PRESS. TEST	0.2	EA	10000	2000		0	2,000
					TOTAL		$328,198

BASIN : POWDER RIVER
INJECTION PRESSURE : 800 PSI AND ABOVE
CLASS II

ANNUAL OPERATING COSTS

	QUANTITY NO. UNITS	UNIT MEAS	MATERIAL PER UNIT	TOTAL	LABOR PER UNIT	TOTAL	TOTAL COST ANNUAL
MANPOWER							
OPERATORS	2	EA			40000	80000	80,000
CHEMICALS							
CORROSION	100	BBL	294	29400			29,400
O2 SCAVENGER	100	BBL	336	33600			33,600
COAGULENT	20	BBL	294	5880			5,880
EMULSION BREAKER	80	BBL	294	23520			23,520
ELECTRICY			$/KWH				
PUMPS							
CENTRIFUGAL	50	KW	0.05	21500			21,500
POSITIVE DISPL.	200	KW	0.05	86000			86,000
MISC.	10	KW	0.05	4300			4,300
(EQUIPMENT OPERATES 8600 HRS/YR)							
FILTERS	5324	EA	9.5	50578			50,578
SOLIDS TRUCKING	2	LOADS			700	1400	1,400
MAINTENANCE	1	MISC.	200	200	800	800	1,000
PUMPS							
CENTRIFUGAL	50	HP	10	500	20	1000	1,500
POSITIVE DISPL.	200	HP	10	2000	20	4000	6,000
WELL COST							
PRESS. TEST	0.2	EA	10000	2000		0	2,000
						TOTAL	$346,673

BASIN : SAN JUAN
INJECTION PRESSURE : 800 PSI AND ABOVE
CLASS II

ANNUAL OPERATING COSTS

	QUANTITY NO. UNITS	UNIT MEAS	MATERIAL PER UNIT	TOTAL	LABOR PER UNIT	TOTAL	TOTAL COST ANNUAL
MANPOWER							
OPERATORS	2	EA			40000	80000	80,000
CHEMICALS							
CORROSION	100	BBL	294	29400			29,400
O2 SCAVENGER	100	BBL	336	33600			33,600
COAGULENT	20	BBL	294	5880			5,880
EMULSION BREAKER	80	BBL	294	23520			23,520
ELECTRICY			$/KWH				
PUMPS							
CENTRIFUGAL	50	KW	0.06	25800			25,800
POSITIVE DISPL.	200	KW	0.06	103200			103,200
MISC.	10	KW	0.06	5160			5,160
(EQUIPMENT OPERATES 8600 HRS/YR)							
FILTERS	5324	EA	9.5	50578			50,578
SOLIDS TRUCKING	2	LOADS			700	1400	1,400
MAINTENANCE	1	MISC.	200	200	800	800	1,000
PUMPS							
CENTRIFUGAL	50	HP	10	500	20	1000	1,500
POSITIVE DISPL.	200	HP	10	2000	20	4000	6,000
WELL COST							
PRESS. TEST	0.2	EA	10000	2000		0	2,000
						TOTAL	$369,038

BASIN ✓ DENVER - JULESBURG
INJECTION PRESSURE : 800 PSI AND ABOVE
CLASS II

ANNUAL OPERATING COSTS

	QUANTITY NO. UNITS	UNIT MEAS	MATERIAL PER UNIT	TOTAL	LABOR PER UNIT	TOTAL	TOTAL COST ANNUAL
MANPOWER							
OPERATORS	2	EA			40000	80000	80,000
CHEMICALS							
CORROSION	100	BBL	294	29400			29,400
O2 SCAVENGER	100	BBL	336	33600			33,600
COAGULENT	20	BBL	294	5880			5,880
EMULSION BREAKER	80	BBL	294	23520			23,520
ELECTRICY			$/KWH				
PUMPS							
CENTRIFUGAL	50	KW	0.07	30100			30,100
POSITIVE DISPL.	200	KW	0.07	120400			120,400
MISC.	10	KW	0.07	6020			6,020
(EQUIPMENT OPERATES 8600 HRS/YR)							
FILTERS	5324	EA	9.5	50578			50,578
SOLIDS TRUCKING	2	LOADS			700	1400	1,400
MAINTENANCE	1	MISC.	200	200	800	800	1,000
PUMPS							
CENTRIFUGAL	50	HP	10	500	20	1000	1,500
POSITIVE DISPL.	200	HP	10	2000	20	4000	6,000
WELL COST							
PRESS. TEST	0.2	EA	10000	2000		0	2,000

TOTAL $391,392

BASIN : SAN JOAQUIN
INJECTION PRESSURE : 200 PSI TO 800 PSI
CLASS II

ANNUAL OPERATING COSTS

	QUANTITY NO. UNITS	UNIT MEAS	MATERIAL PER UNIT	TOTAL	LABOR PER UNIT	TOTAL	TOTAL COST ANNUAL
MANPOWER							
OPERATORS	2	EA			40000	80000	80,000
CHEMICALS							
CORROSION	100	BBL	294	29400			29,400
O2 SCAVENGER	100	BBL	336	33600			33,600
COAGULENT	20	BBL	294	5880			5,880
EMULSION BREAKER	80	BBL	294	23520			23,520
ELECTRICY			$/KWH				
PUMPS							
CENTRIFUGAL	50	KW	0.09	38700			38,700
POSITIVE DISPL.	100	KW	0.09	77400			77,400
MISC.	10	KW	0.09	7740			7,740
(EQUIPMENT OPERATES 8600 HRS/YR)							
FILTERS	5324	EA	9.5	50578			50,578
SOLIDS TRUCKING	2	LOADS			700	1400	1,400
MAINTENANCE	1	MISC.	200	200	800	800	1,000
PUMPS							
CENTRIFUGAL	50	HP	10	500	20	1000	1,500
POSITIVE DISPL.	100	HP	10	1000	20	2000	3,000
WELL COST							
PRESS. TEST	0.2	EA	10000	2000		0	2,000
						TOTAL	$355,718

APPENDIX E

LANDFARMING MODEL RUNS FROM THE POPE-REID LAND TREATMENT COMPUTER COST MODEL

The costs for the first eight facilities (1-8) are for the pre-ISS scenario, with one facility for each region. The costs for the second eight facilities (1-8) are for the RCRA scenario. Each facility is labeled by region and scenario.

BASIN : NORTH SLOPE
INJECTION PRESSURE : 800 PSI AND ABOVE
CLASS II

ANNUAL OPERATING COSTS

	QUANTITY NO. UNITS	UNIT MEAS	MATERIAL PER UNIT	TOTAL	LABOR PER UNIT	TOTAL	TOTAL COST ANNUAL
MANPOWER							
OPERATORS	2	EA			140000	280000	280,000
CHEMICALS							
CORROSION	100	BBL	940	94000			94,000
O2 SCAVENGER	100	BBL	982	98200			98,200
COAGULENT	20	BBL	940	18800			18,800
EMULSION BREAKER	80	BBL	940	75200			75,200
FUEL			$/MCF				
PUMPS							
CENTRIFUGAL	50	HP	6	20640			20,640
POSITIVE DISPL.	200	HP	6	82560			82,560
MISC.	10	HP	6	4128			4,128
(EQUIPMENT OPERATES 8600 HRS/YR)							
FILTERS	5324	EA	29.5	157058			157,058
SOLIDS SHIPPING	2	LOADS			7000	14000	14,000
MAINTENANCE	1	MISC.	600	600	3200	3200	3,800
PUMPS							
CENTRIFUGAL	50	HP	30	1500	80	4000	5,500
POSITIVE DISPL.	200	HP	30	6000	80	16000	22,000
WELL COST							
PRESS. TEST	0.2	EA	40000	8000		0	8,000

TOTAL $883,886

```
<><><><><><><><><><><><><><><><><><><><><><><><><><><><><><>
<><><><><><><><><><><><><>RESULTS><><><><><><><><><><><><><><>
<><><><><><><><><><><><><><><><><><><><><><><><><><><><><><>
```

:::::::::::
FACILITY 1
:::::::::::

REGION 2, PRE-ISS (BASELINE)

GENERAL CHARACTERISTICS

WASTE APPLICATION RATE............	17070.86 MT/YEAR
WASTE APPLICATION RATE............	131.31 MT/DAY
ACTIVE AREA.......................	35.00 ACRES
ACTIVE AREA LENGTH................	376.36 METERS
ACTIVE AREA WIDTH.................	376.36 METERS
ACTIVE AREA DEPTH................	1.00 METERS
INORGANICS LIMITING FACTOR: BARIUM	
CLEARED AREA......................	47.26 ACRES
TOTAL PROPERTY AREA...............	69.08 ACRES
BUILDING AREA.....................	112. SQ M
DRAINAGE TILE LENGTH..............	0.00 METERS
STORAGE TANK CAPACITY............	173448. GALLONS

CLOSURE

REVEGETATION SURFACE AREA........	35.00 ACRES

********** COST SUMMARY **********
PRE-ISS (BASELINE)

CAPITAL COSTS

LAND PURCHASE COST...........	$	345421.
LAND CLEARING COST...........	$	123150.
UTILITIES SITE WORK COST.....	$	27564.
BUILDING COST................	$	61824.
EQUIPMENT COST...............	$	100880.
SOIL DRAINAGE SYSTEM COST....	$	0.
STORAGE TANK COST............	$	98245.

SUBTOTAL...............	$	729521.
ENGINEERING FEE..............	$	72952.
CONTRACTORS FEE..............	$	72952.
INSPECTION AND TESTING FEE...	$	0.
SPARE PARTS INVENTORY........	$	7295.
CONSTRUCTION + FIELD EXPENSE.	$	36476.

SUBTOTAL...............	$	919196.
CONTINGENCY..................	$	137879.

TOTAL CAPITAL COST.....	$	1057075.

O AND M COSTS

LABOR COST.....	$	38021.
MAINTENANCE.....	$	10571.
UTILITIES.....	$	5737.
INSURANCE TAXES AND G & A....	$	52854.
TOTAL O & M COSTS.....	$	107183.

CLOSURE COSTS

REVEGETATION COST.....	$	10113.
SUBTOTAL.....	$	10113.
INSPECTION AND TESTING FEE...	$	506.
CONTRACTORS FEE.....	$	1011.
SUBTOTAL.....	$	12642.
CONTINGENCY.....	$	1896.
TOTAL CLOSURE COST.....	$	14538.

::::::::::
FACILITY 2
::::::::::

REGION 4, PRE-ISS (BASELINE)

GENERAL CHARACTERISTICS

WASTE APPLICATION RATE.....	17070.86	MT/YEAR
WASTE APPLICATION RATE.....	65.66	MT/DAY
ACTIVE AREA.....	35.00	ACRES
ACTIVE AREA LENGTH.....	376.36	METERS
ACTIVE AREA WIDTH.....	376.36	METERS
ACTIVE AREA DEPTH.....	1.00	METERS
INORGANICS LIMITING FACTOR: BARIUM		
CLEARED AREA.....	47.26	ACRES
TOTAL PROPERTY AREA.....	69.08	ACRES
BUILDING AREA.....	112.	SQ M
DRAINAGE TILE LENGTH.....	0.00	METERS
STORAGE TANK CAPACITY.....	86724.	GALLONS

CLOSURE

REVEGETATION SURFACE AREA.....	35.00	ACRES

********** COST SUMMARY **********
PRE-ISS (BASELINE)

CAPITAL COSTS
==========

LAND PURCHASE COST.....	$	345421.
LAND CLEARING COST.....	$	123150.
UTILITIES SITE WORK COST.....	$	27564.
BUILDING COST.....	$	61824.
EQUIPMENT COST.....	$	93808.
SOIL DRAINAGE SYSTEM COST....	$	0.
STORAGE TANK COST.....	$	67570.
SUBTOTAL.....	$	691774.
ENGINEERING FEE.....	$	69177.
CONTRACTORS FEE.....	$	69177.
INSPECTION AND TESTING FEE...	$	0.
SPARE PARTS INVENTORY.....	$	6918.
CONSTRUCTION + FIELD EXPENSE.	$	34589.
SUBTOTAL.....	$	871635.
CONTINGENCY.....	$	130745.
TOTAL CAPITAL COST.....	$	1002380.

O AND M COSTS
==========

LABOR COST.....	$	67141.
MAINTENANCE.....	$	10024.
UTILITIES.....	$	11474.
INSURANCE TAXES AND G & A....	$	50119.
TOTAL O & M COSTS.....	$	138758.

CLOSURE COSTS
==========

REVEGETATION COST.....	$	10113.
SUBTOTAL.....	$	10113.
INSPECTION AND TESTING FEE...	$	506.
CONTRACTORS FEE.....	$	1011.
SUBTOTAL.....	$	12642.
CONTINGENCY.....	$	1896.
TOTAL CLOSURE COST.....	$	14538.

::::::::::
FACILITY 3
::::::::::

REGION 5, PRE-ISS [BASELINE]
==========

GENERAL CHARACTERISTICS

```
WASTE APPLICATION RATE............   17070.86 MT/YEAR
WASTE APPLICATION RATE............     131.31 MT/DAY
ACTIVE AREA.......................      35.00 ACRES
ACTIVE AREA LENGTH................     376.36 METERS
ACTIVE AREA WIDTH.................     376.36 METERS
ACTIVE AREA DEPTH.................       1.00 METERS
INORGANICS LIMITING FACTOR:  BARIUM
CLEARED AREA......................      47.26 ACRES
TOTAL PROPERTY AREA...............      69.08 ACRES
BUILDING AREA.....................       112. SQ M
DRAINAGE TILE LENGTH..............       0.00 METERS
STORAGE TANK CAPACITY............   173448. GALLONS

CLOSURE
-------
REVEGETATION SURFACE AREA........      35.00 ACRES


********** COST SUMMARY **********
          PRE-ISS (BASELINE)


CAPITAL COSTS
=============
LAND PURCHASE COST........... $     345421.
LAND CLEARING COST........... $     123150.
UTILITIES SITE WORK COST..... $      27564.
BUILDING COST................ $      61824.
EQUIPMENT COST............... $     100880.
SOIL DRAINAGE SYSTEM COST.... $          0.
STORAGE TANK COST............ $      98245.
                              -----------
      SUBTOTAL............... $     729521.
ENGINEERING FEE............... $      72952.
CONTRACTORS FEE............... $      72952.
INSPECTION AND TESTING FEE... $          0.
SPARE PARTS INVENTORY........ $       7295.
CONSTRUCTION + FIELD EXPENSE. $      36476.
                              -----------
      SUBTOTAL............... $     919196.
CONTINGENCY................... $     137879.
                              ===========
TOTAL CAPITAL COST........... $    1057075.

O AND M COSTS
=============
LABOR COST................... $      38021.
MAINTENANCE.................. $      10571.
UTILITIES.................... $       5737.
INSURANCE TAXES AND G & A.... $      52854.
                              ===========
TOTAL O & M COSTS............ $     107183.

CLOSURE COSTS
=============
```

REVEGETATION COST.....	$	10113.
SUBTOTAL.....	$	10113.
INSPECTION AND TESTING FEE...	$	506.
CONTRACTORS FEE.....	$	1011.
SUBTOTAL.....	$	12642.
CONTINGENCY.....	$	1896.
TOTAL CLOSURE COST.....	$	14538.

::::::::::::
FACILITY 4
::::::::::::

REGION 6, PRE-ISS (BASELINE)

GENERAL CHARACTERISTICS

WASTE APPLICATION RATE.....	12803.14	MT/YEAR
WASTE APPLICATION RATE.....	98.49	MT/DAY
ACTIVE AREA.....	35.00	ACRES
ACTIVE AREA LENGTH.....	376.36	METERS
ACTIVE AREA WIDTH.....	376.36	METERS
ACTIVE AREA DEPTH.....	1.00	METERS
INORGANICS LIMITING FACTOR: BARIUM		
CLEARED AREA.....	47.26	ACRES
TOTAL PROPERTY AREA.....	69.08	ACRES
BUILDING AREA.....	112.	SQ M
DRAINAGE TILE LENGTH.....	0.00	METERS
STORAGE TANK CAPACITY.....	130086.	GALLONS

CLOSURE

REVEGETATION SURFACE AREA.....	35.00	ACRES

********** COST SUMMARY **********
PRE-ISS (BASELINE)

CAPITAL COSTS

LAND PURCHASE COST.....	$	345421.
LAND CLEARING COST.....	$	123150.
UTILITIES SITE WORK COST.....	$	27564.
BUILDING COST.....	$	61824.
EQUIPMENT COST.....	$	93808.
SOIL DRAINAGE SYSTEM COST....	$	0.
STORAGE TANK COST.....	$	84110.
SUBTOTAL.....	$	708313.
ENGINEERING FEE.....	$	70831.

CONTRACTORS FEE.....	$	70631.
INSPECTION AND TESTING FEE...	$	0.
SPARE PARTS INVENTORY.....	$	7083.
CONSTRUCTION + FIELD EXPENSE.	$	35416.
SUBTOTAL.....	$	892474.
CONTINGENCY.....	$	133871.
TOTAL CAPITAL COST.....	$	1026345.

O AND M COSTS
==========

LABOR COST.....	$	38021.
MAINTENANCE.....	$	10263.
UTILITIES.....	$	8093.
INSURANCE TAXES AND G & A....	$	51317.
TOTAL O & M COSTS.....	$	107695.

CLOSURE COSTS
==========

REVEGETATION COST.....	$	10113.
SUBTOTAL.....	$	10113.
INSPECTION AND TESTING FEE...	$	506.
CONTRACTORS FEE.....	$	1011.
SUBTOTAL.....	$	12642.
CONTINGENCY.....	$	1896.
TOTAL CLOSURE COST.....	$	14538.

::::::::::
FACILITY 5
::::::::::

REGION 7, PRE-ISS (BASELINE)
==========

GENERAL CHARACTERISTICS

WASTE APPLICATION RATE.....	12803.14	MT/YEAR
WASTE APPLICATION RATE.....	49.24	MT/DAY
ACTIVE AREA.....	35.00	ACRES
ACTIVE AREA LENGTH.....	376.36	METERS
ACTIVE AREA WIDTH.....	376.36	METERS
ACTIVE AREA DEPTH.....	1.00	METERS
INORGANICS LIMITING FACTOR: BARIUM		
CLEARED AREA.....	47.26	ACRES
TOTAL PROPERTY AREA.....	69.08	ACRES
BUILDING AREA.....	112.	SQ M
DRAINAGE TILE LENGTH.....	0.00	METERS
STORAGE TANK CAPACITY.....	65043.	GALLONS

CLOSURE

REVEGETATION SURFACE AREA..... 35.00 ACRES

********** COST SUMMARY **********
PRE-ISS (BASELINE)

CAPITAL COSTS
==========

LAND PURCHASE COST.....	$	345421.
LAND CLEARING COST.....	$	123150.
UTILITIES SITE WORK COST.....	$	27564.
BUILDING COST.....	$	61824.
EQUIPMENT COST.....	$	93808.
SOIL DRAINAGE SYSTEM COST....	$	0.
STORAGE TANK COST.....	$	57848.
SUBTOTAL.....	$	682051.
ENGINEERING FEE.....	$	68205.
CONTRACTORS FEE.....	$	68205.
INSPECTION AND TESTING FEE...	$	0.
SPARE PARTS INVENTORY.....	$	6821.
CONSTRUCTION + FIELD EXPENSE.	$	34103.
SUBTOTAL.....	$	859385.
CONTINGENCY.....	$	128908.
TOTAL CAPITAL COST.....	$	988292.

O AND M COSTS
==========

LABOR COST.....	$	67141.
MAINTENANCE.....	$	9883.
UTILITIES.....	$	9119.
INSURANCE TAXES AND G & A....	$	49415.
TOTAL O & M COSTS.....	$	135557.

CLOSURE COSTS
==========

REVEGETATION COST.....	$	10113.
SUBTOTAL.....	$	10113.
INSPECTION AND TESTING FEE...	$	506.
CONTRACTORS FEE.....	$	1011.
SUBTOTAL.....	$	12642.
CONTINGENCY.....	$	1896.
TOTAL CLOSURE COST.....	$	14538.

::::::::::
FACILITY 6

::::::::::

REGION 8, PRE-ISS (BASELINE)
==========

GENERAL CHARACTERISTICS

WASTE APPLICATION RATE.....	12803.14	MT/YEAR
WASTE APPLICATION RATE.....	98.49	MT/DAY
ACTIVE AREA.....	35.00	ACRES
ACTIVE AREA LENGTH.....	376.36	METERS
ACTIVE AREA WIDTH.....	376.36	METERS
ACTIVE AREA DEPTH.....	1.00	METERS
INORGANICS LIMITING FACTOR: BARIUM		
CLEARED AREA.....	47.26	ACRES
TOTAL PROPERTY AREA.....	69.08	ACRES
BUILDING AREA.....	112.	SQ M
DRAINAGE TILE LENGTH.....	0.00	METERS
STORAGE TANK CAPACITY.....	130086.	GALLONS

CLOSURE

REVEGETATION SURFACE AREA.....	35.00	ACRES

********** COST SUMMARY **********
PRE-ISS (BASELINE)

CAPITAL COSTS
==========

LAND PURCHASE COST.....	$	345421.
LAND CLEARING COST.....	$	123150.
UTILITIES SITE WORK COST.....	$	27564.
BUILDING COST.....	$	61824.
EQUIPMENT COST.....	$	93808.
SOIL DRAINAGE SYSTEM COST....	$	0.
STORAGE TANK COST.....	$	84110.
SUBTOTAL.....	$	708313.
ENGINEERING FEE.....	$	70831.
CONTRACTORS FEE.....	$	70831.
INSPECTION AND TESTING FEE...	$	0.
SPARE PARTS INVENTORY.....	$	7083.
CONSTRUCTION + FIELD EXPENSE.	$	35416.
SUBTOTAL.....	$	892474.
CONTINGENCY.....	$	133871.
TOTAL CAPITAL COST.....	$	1026345.

O AND M COSTS
==========

LABOR COST.....	$	38021.
MAINTENANCE.....	$	10263.

```
UTILITIES..................... $        6093.
INSURANCE TAXES AND G & A.... $       51317.
                                  ===========
TOTAL O & M COSTS............ $      107695.

CLOSURE COSTS
=============
REVEGETATION COST............ $       10113.
                                  -----------
      SUBTOTAL............... $       10113.
INSPECTION AND TESTING FEE... $         506.
CONTRACTORS FEE............... $        1011.
                                  -----------
      SUBTOTAL............... $       12642.
CONTINGENCY................... $        1896.
                                  ===========
TOTAL CLOSURE COST........... $       14538.


               ::::::::::
               FACILITY 7
               ::::::::::

REGION 9, PRE-ISS (BASELINE)
============================

GENERAL CHARACTERISTICS
-----------------------
WASTE APPLICATION RATE............   12803.14 MT/YEAR
WASTE APPLICATION RATE............      65.66 MT/DAY
ACTIVE AREA.......................      35.00 ACRES
ACTIVE AREA LENGTH................     376.36 METERS
ACTIVE AREA WIDTH.................     376.36 METERS
ACTIVE AREA DEPTH.................       1.00 METERS
INORGANICS LIMITING FACTOR:  BARIUM
CLEARED AREA......................      47.26 ACRES
TOTAL PROPERTY AREA...............      69.08 ACRES
BUILDING AREA.....................       112. SQ M
DRAINAGE TILE LENGTH..............       0.00 METERS
STORAGE TANK CAPACITY............     86724. GALLONS

CLOSURE
-------
REVEGETATION SURFACE AREA........      35.00 ACRES


********** COST SUMMARY **********
          PRE-ISS (BASELINE)


CAPITAL COSTS
=============
LAND PURCHASE COST........... $      345421.
LAND CLEARING COST........... $      123150.
UTILITIES SITE WORK COST..... $       27564.
```

BUILDING COST.....	$	61624.
EQUIPMENT COST.....	$	93808.
SOIL DRAINAGE SYSTEM COST....	$	0.
STORAGE TANK COST.....	$	67570.
SUBTOTAL.....	$	691774.
ENGINEERING FEE.....	$	69177.
CONTRACTORS FEE.....	$	69177.
INSPECTION AND TESTING FEE...	$	0.
SPARE PARTS INVENTORY.....	$	6918.
CONSTRUCTION + FIELD EXPENSE.	$	34589.
SUBTOTAL.....	$	671635.
CONTINGENCY.....	$	130745.
TOTAL CAPITAL COST.....	$	1002380.

O AND M COSTS
==========

LABOR COST.....	$	50649.
MAINTENANCE.....	$	10024.
UTILITIES.....	$	8606.
INSURANCE TAXES AND G & A....	$	50119.
TOTAL O & M COSTS.....	$	119397.

CLOSURE COSTS
==========

REVEGETATION COST.....	$	10113.
SUBTOTAL.....	$	10113.
INSPECTION AND TESTING FEE...	$	506.
CONTRACTORS FEE.....	$	1011.
SUBTOTAL.....	$	12642.
CONTINGENCY.....	$	1896.
TOTAL CLOSURE COST.....	$	14538.

::::::::::
FACILITY 8
::::::::::

REGION 10, PRE-ISS (BASELINE)
==========

GENERAL CHARACTERISTICS

WASTE APPLICATION RATE.....	12803.14	MT/YEAR
WASTE APPLICATION RATE.....	49.24	MT/DAY
ACTIVE AREA.....	35.00	ACRES
ACTIVE AREA LENGTH.....	376.36	METERS
ACTIVE AREA WIDTH.....	376.36	METERS
ACTIVE AREA DEPTH.....	1.00	METERS

INORGANICS LIMITING FACTOR: BARIUM

```
CLEARED AREA.......................        47.26 ACRES
TOTAL PROPERTY AREA................        69.08 ACRES
BUILDING AREA......................         112. SQ M
DRAINAGE TILE LENGTH...............         0.00 METERS
STORAGE TANK CAPACITY.............      65043. GALLONS

CLOSURE
-------
REVEGETATION SURFACE AREA........        35.00 ACRES


********** COST SUMMARY **********
          PRE-ISS (BASELINE)


CAPITAL COSTS
=============
LAND PURCHASE COST........... $      345421.
LAND CLEARING COST........... $      123150.
UTILITIES SITE WORK COST..... $       27564.
BUILDING COST................ $       61824.
EQUIPMENT COST............... $       93808.
SOIL DRAINAGE SYSTEM COST.... $           0.
STORAGE TANK COST............ $       57848.
                              -----------
      SUBTOTAL............... $      682051.
ENGINEERING FEE.............. $       68205.
CONTRACTORS FEE.............. $       68205.
INSPECTION AND TESTING FEE... $           0.
SPARE PARTS INVENTORY........ $        6821.
CONSTRUCTION + FIELD EXPENSE. $       34103.
                              -----------
      SUBTOTAL............... $      859385.
CONTINGENCY.................. $      128908.
                              ===========
TOTAL CAPITAL COST........... $      988292.

O AND M COSTS
=============
LABOR COST................... $       67141.
MAINTENANCE.................. $        9883.
UTILITIES.................... $        9119.
INSURANCE TAXES AND G & A.... $       49415.
                              ===========
TOTAL O & M COSTS............ $      135557.

CLOSURE COSTS
=============
REVEGETATION COST............ $       10113.
                              -----------
      SUBTOTAL............... $       10113.
INSPECTION AND TESTING FEE... $         506.
CONTRACTORS FEE.............. $        1011.
                              -----------
      SUBTOTAL............... $       12642.
```

CONTINGENCY.....	$	1896.
		==========
TOTAL CLOSURE COST.....	$	14538.

```
<><><><><><><><><><><><><><><><><><><><><><><><><><><><><><>
<><><><><><><><><><><><><>RESULTS><><><><><><><><><><><><><>
<><><><><><><><><><><><><><><><><><><><><><><><><><><><><><>

                 :::::::::::
                 FACILITY 1
                 :::::::::::

        REGION 2, PART 264 (RCRA)
        ==============================

        GENERAL CHARACTERISTICS
        -----------------------
        WASTE APPLICATION RATE............   17070.86 MT/YEAR
        WASTE APPLICATION RATE............     131.31 MT/DAY
        ACTIVE AREA.......................      35.00 ACRES
        ACTIVE AREA LENGTH................     376.36 METERS
        ACTIVE AREA WIDTH.................     376.36 METERS
        ACTIVE AREA DEPTH.................       1.00 METERS
        INORGANICS LIMITING FACTOR:  BARIUM
        CLEARED AREA......................      53.98 ACRES
        TOTAL PROPERTY AREA...............      77.21 ACRES
        BUILDING AREA.....................       112. SQ M
        DRAINAGE TILE LENGTH..............       0.00 METERS
        GROUNDWATER WELLS.................         36 WELLS
        LYSIMETERS........................         22 LYSIMETE

        RUN-ON/RUN-OFF CONTROL
        ----------------------
        BERM VOLUME.....................      2869. CU M
        BERM SURFACE AREA...............      8202. SQ M
        BERM HEIGHT.....................       0.60 METERS
        RETENTION POND CAPACITY........   1990008. GALLONS
        RETENTION POND OPERATING VOLUME      7533. CU M
        RETENTION POND LENGTH..........      57.63 METERS
        RETENTION POND WIDTH...........      57.63 METERS
        RETENTION POND DEPTH...........       2.00 METERS
        STORAGE TANK CAPACITY............    173448. GALLONS

        CLOSURE
        -------
        REVEGETATION SURFACE AREA........       35.00 ACRES
        SOIL CORE SAMPLES.................         18
        SOIL PORE SAMPLES.................         22
        GROUNDWATER SAMPLES...............         36

        POST CLOSURE
        ------------
        GROUNDWATER SAMPLES...............        324
        SOIL CORE SAMPLES.................        162
        AREA TO BE MOWED..................      53.95 ACRES


        ********** COST SUMMARY **********
```

PART 264

CAPITAL COSTS
==========

LAND PURCHASE COST.....	$	386075.
LAND CLEARING COST.....	$	140674.
UTILITIES SITE WORK COST.....	$	27564.
BUILDING COST.....	$	61824.
EQUIPMENT COST.....	$	108160.
BERM CONSTRUCTION COST.....	$	19629.
BERM REVEGETATION COST.....	$	2789.
RETENTION POND COST.....	$	149792.
SOIL DRAINAGE SYSTEM COST....	$	0.
STORAGE TANK COST.....	$	98245.
GROUNDWATER WELLS COST.....	$	125400.
LYSIMETERS COST.....	$	4400.
WIND DISPERSAL CONTROL COST..	$	38780.
SUBTOTAL.....	$	1135765.
REGULATORY ACTIVITIES.....	$	238755.
ENGINEERING FEE.....	$	113577.
CONTRACTORS FEE.....	$	113577.
INSPECTION AND TESTING FEE...	$	6490.
SPARE PARTS INVENTORY.....	$	11358.
CONSTRUCTION + FIELD EXPENSE.	$	56788.
SUBTOTAL.....	$	1676307.
CONTINGENCY.....	$	251446.
TOTAL CAPITAL COST.....	$	1927752.

O AND M COSTS
==========

LABOR COST.....	$	42733.
GROUNDWATER MONITORING COST..	$	12249.
SOIL PORE COST.....	$	18436.
SOIL CORE COST.....	$	8442.
MAINTENANCE.....	$	19278.
UTILITIES.....	$	5737.
INSURANCE TAXES AND G & A....	$	96388.
TOTAL O & M COSTS.....	$	203262.

CLOSURE COSTS
==========

CONTAMINATED SOIL EXCAVATING.	$	0.
REVEGETATION COST.....	$	141645.
RETENTION POND CLOSURE COST..	$	134858.
TRANSPORTATION COST.....	$	0.
DISPOSAL COST.....	$	0.
EQUIPMENT DECONTAMINATION....	$	283.
CERTIFICATION COST.....	$	6482.
TANK CLOSURE COST.....	$	5984.
WASTE PILE CLOSURE COST.....	$	0.
GROUNDWATER MONITORING COST..	$	6246.

SOIL PORE COST.....	$	4737.
SOIL CORE COST.....	$	4325.
SUBTOTAL.....	$	304559.
INSPECTION AND TESTING FEE...	$	13625.
CONTRACTORS FEE.....	$	27650.
ENGINEERING FEE.....	$	30456.
SUBTOTAL.....	$	376491.
CONTINGENCY.....	$	56474.
TOTAL CLOSURE COST.....	$	432964.

POST CLOSURE COSTS
==========

LAND AUTHORITY +PROP DEED CST	$	4930.
GROUNDWATER MONITORING COST..	$	56217.
SOIL CORE COST.....	$	37989.
EROSION CONTROL COST.....	$	47040.
VEGETATIVE COVER COST.....	$	310153.
PARTIAL REVEG COVER COST.....	$	105354.
INSPECTION COST.....	$	4986.
SUBTOTAL.....	$	561739.
ENGINEERING FEE.....	$	56174.
SUBTOTAL.....	$	617912.
CONTINGENCY.....	$	92687.
TOTAL POST CLOSURE COST.....	$	710599.

::::::::::
FACILITY 2
::::::::::

REGION 4, PART 264 (RCRA)
==========

GENERAL CHARACTERISTICS

WASTE APPLICATION RATE.....	17070.86	MT/YEAR
WASTE APPLICATION RATE.....	65.66	MT/DAY
ACTIVE AREA.....	35.00	ACRES
ACTIVE AREA LENGTH.....	376.36	METERS
ACTIVE AREA WIDTH.....	376.36	METERS
ACTIVE AREA DEPTH.....	1.00	METERS
INORGANICS LIMITING FACTOR: BARIUM		
CLEARED AREA.....	56.50	ACRES
TOTAL PROPERTY AREA.....	80.26	ACRES
BUILDING AREA.....	112.	SQ M
DRAINAGE TILE LENGTH.....	0.00	METERS
GROUNDWATER WELLS.....	36	WELLS
LYSIMETERS.....	22	LYSIMETE

RUN-ON/RUN-OFF CONTROL

BERM VOLUME.....	2986.	CU M
BERM SURFACE AREA.....	8537.	SQ M
BERM HEIGHT.....	0.60	METERS
RETENTION POND CAPACITY.....	4672454.	GALLONS
RETENTION POND OPERATING VOLUME	17687.	CU M
RETENTION POND LENGTH.....	80.93	METERS
RETENTION POND WIDTH.....	80.93	METERS
RETENTION POND DEPTH.....	2.00	METERS
STORAGE TANK CAPACITY.....	86724.	GALLONS

CLOSURE

REVEGETATION SURFACE AREA.....	35.00	ACRES
SOIL CORE SAMPLES.....	18	
SOIL PORE SAMPLES.....	22	
GROUNDWATER SAMPLES.....	36	

POST CLOSURE

GROUNDWATER SAMPLES.....	324	
SOIL CORE SAMPLES.....	162	
AREA TO BE MOWED.....	56.47	ACRES

********** COST SUMMARY **********
PART 264

CAPITAL COSTS
==========

LAND PURCHASE COST.....	$	401293.
LAND CLEARING COST.....	$	147235.
UTILITIES SITE WORK COST.....	$	27564.
BUILDING COST.....	$	61824.
EQUIPMENT COST.....	$	101088.
BERM CONSTRUCTION COST.....	$	20432.
BERM REVEGETATION COST.....	$	2902.
RETENTION POND COST.....	$	265098.
SOIL DRAINAGE SYSTEM COST....	$	0.
STORAGE TANK COST.....	$	67570.
GROUNDWATER WELLS COST.....	$	125400.
LYSIMETERS COST.....	$	4400.
WIND DISPERSAL CONTROL COST..	$	39760.
SUBTOTAL.....	$	1237001.
REGULATORY ACTIVITIES.....	$	238755.
ENGINEERING FEE.....	$	123700.
CONTRACTORS FEE.....	$	123700.
INSPECTION AND TESTING FEE...	$	6490.
SPARE PARTS INVENTORY.....	$	12370.
CONSTRUCTION + FIELD EXPENSE.	$	61850.
SUBTOTAL.....	$	1803865.
CONTINGENCY.....	$	270580.

		==========
TOTAL CAPITAL COST.....	$	2074444.

O AND M COSTS
==========

LABOR COST.....	$	76528.
GROUNDWATER MONITORING COST..	$	12249.
SOIL PORE COST.....	$	18436.
SOIL CORE COST.....	$	8442.
MAINTENANCE.....	$	20744.
UTILITIES.....	$	11474.
INSURANCE TAXES AND G & A....	$	103722.
		==========
TOTAL O & M COSTS.....	$	251596.

CLOSURE COSTS
==========

CONTAMINATED SOIL EXCAVATING.	$	0.
REVEGETATION COST.....	$	141645.
RETENTION POND CLOSURE COST..	$	235571.
TRANSPORTATION COST.....	$	0.
DISPOSAL COST.....	$	0.
EQUIPMENT DECONTAMINATION....	$	282.
CERTIFICATION COST.....	$	6482.
TANK CLOSURE COST.....	$	3122.
WASTE PILE CLOSURE COST.....	$	0.
GROUNDWATER MONITORING COST..	$	6246.
SOIL PORE COST.....	$	4737.
SOIL CORE COST.....	$	4325.

SUBTOTAL.....	$	402410.
INSPECTION AND TESTING FEE...	$	18861.
CONTRACTORS FEE.....	$	37722.
ENGINEERING FEE.....	$	40241.

SUBTOTAL.....	$	499233.
CONTINGENCY.....	$	74885.
		==========
TOTAL CLOSURE COST.....	$	574118.

POST CLOSURE COSTS
==========

LAND AUTHORITY +PROP DEED CST	$	5117.
GROUNDWATER MONITORING COST..	$	56217.
SOIL CORE COST.....	$	37989.
EROSION CONTROL COST.....	$	47040.
VEGETATIVE COVER COST.....	$	320324.
PARTIAL REVEG COVER COST.....	$	107804.
INSPECTION COST.....	$	5097.

SUBTOTAL.....	$	574471.
ENGINEERING FEE.....	$	57447.

SUBTOTAL.....	$	631918.
CONTINGENCY.....	$	94788.
		==========

TOTAL POST CLOSURE COST..... $ 726706.

::::::::::
FACILITY 3
::::::::::

REGION 5, PART 264 (RCRA)
==========

GENERAL CHARACTERISTICS

WASTE APPLICATION RATE.....	17070.86	MT/YEAR
WASTE APPLICATION RATE.....	131.31	MT/DAY
ACTIVE AREA.....	35.00	ACRES
ACTIVE AREA LENGTH.....	376.36	METERS
ACTIVE AREA WIDTH.....	376.36	METERS
ACTIVE AREA DEPTH.....	1.00	METERS
INORGANICS LIMITING FACTOR: BARIUM		
CLEARED AREA.....	54.29	ACRES
TOTAL PROPERTY AREA.....	77.59	ACRES
BUILDING AREA.....	112.	SQ M
DRAINAGE TILE LENGTH.....	0.00	METERS
GROUNDWATER WELLS.....	36	WELLS
LYSIMETERS.....	22	LYSIMETE

RUN-ON/RUN-OFF CONTROL

BERM VOLUME.....	2883.	CU M
BERM SURFACE AREA.....	8243.	SQ M
BERM HEIGHT.....	0.60	METERS
RETENTION POND CAPACITY.....	2249010.	GALLONS
RETENTION POND OPERATING VOLUME	8513.	CU M
RETENTION POND LENGTH.....	60.50	METERS
RETENTION POND WIDTH.....	60.50	METERS
RETENTION POND DEPTH.....	2.00	METERS
STORAGE TANK CAPACITY.....	173448.	GALLONS

CLOSURE

REVEGETATION SURFACE AREA.....	35.00	ACRES
SOIL CORE SAMPLES.....	18	
SOIL PORE SAMPLES.....	22	
GROUNDWATER SAMPLES.....	36	

POST CLOSURE

GROUNDWATER SAMPLES.....	324	
SOIL CORE SAMPLES.....	162	
AREA TO BE MOWED.....	54.26	ACRES

********** COST SUMMARY **********
PART 264

CAPITAL COSTS
==========

LAND PURCHASE COST.....	$	387952.
LAND CLEARING COST.....	$	141484.
UTILITIES SITE WORK COST.....	$	27564.
BUILDING COST.....	$	61824.
EQUIPMENT COST.....	$	108160.
BERM CONSTRUCTION COST.....	$	19728.
BERM REVEGETATION COST.....	$	2803.
RETENTION POND COST.....	$	162565.
SOIL DRAINAGE SYSTEM COST....	$	0.
STORAGE TANK COST.....	$	98245.
GROUNDWATER WELLS COST.....	$	125400.
LYSIMETERS COST.....	$	4400.
WIND DISPERSAL CONTROL COST..	$	38920.
SUBTOTAL.....	$	1151478.
REGULATORY ACTIVITIES.....	$	238755.
ENGINEERING FEE.....	$	115148.
CONTRACTORS FEE.....	$	115148.
INSPECTION AND TESTING FEE...	$	6490.
SPARE PARTS INVENTORY.....	$	11515.
CONSTRUCTION + FIELD EXPENSE.	$	57574.
SUBTOTAL.....	$	1696106.
CONTINGENCY.....	$	254416.
TOTAL CAPITAL COST.....	$	1950521.

O AND M COSTS
==========

LABOR COST.....	$	42733.
GROUNDWATER MONITORING COST..	$	12249.
SOIL PORE COST.....	$	18436.
SOIL CORE COST.....	$	8442.
MAINTENANCE.....	$	19505.
UTILITIES.....	$	5737.
INSURANCE TAXES AND G & A....	$	97526.
TOTAL O & M COSTS.....	$	204628.

CLOSURE COSTS
==========

CONTAMINATED SOIL EXCAVATING.	$	0.
REVEGETATION COST.....	$	141645.
RETENTION POND CLOSURE COST..	$	146084.
TRANSPORTATION COST.....	$	0.
DISPOSAL COST.....	$	0.
EQUIPMENT DECONTAMINATION....	$	283.
CERTIFICATION COST.....	$	6482.
TANK CLOSURE COST.....	$	5984.
WASTE PILE CLOSURE COST.....	$	0.
GROUNDWATER MONITORING COST..	$	6246.
SOIL PORE COST.....	$	4737.
SOIL CORE COST.....	$	4325.

SUBTOTAL.....	$	315785.
INSPECTION AND TESTING FEE...	$	14386.
CONTRACTORS FEE.....	$	28773.
ENGINEERING FEE.....	$	31579.
SUBTOTAL.....	$	390523.
CONTINGENCY.....	$	58578.
TOTAL CLOSURE COST.....	$	449101.

POST CLOSURE COSTS
==========

LAND AUTHORITY +PROP DEED CST	$	4953.
GROUNDWATER MONITORING COST..	$	56217.
SOIL CORE COST.....	$	37989.
EROSION CONTROL COST.....	$	47040.
VEGETATIVE COVER COST.....	$	311337.
PARTIAL REVEG COVER COST.....	$	105484.
INSPECTION COST.....	$	4998.
SUBTOTAL.....	$	563064.
ENGINEERING FEE.....	$	56306.
SUBTOTAL.....	$	619371.
CONTINGENCY.....	$	92906.
TOTAL POST CLOSURE COST.....	$	712276.

::::::::::
FACILITY 4
::::::::::

REGION 6, PART 264 (RCRA)
==========

GENERAL CHARACTERISTICS

WASTE APPLICATION RATE.....	12803.14	MT/YEAR
WASTE APPLICATION RATE.....	98.49	MT/DAY
ACTIVE AREA.....	35.00	ACRES
ACTIVE AREA LENGTH.....	376.36	METERS
ACTIVE AREA WIDTH.....	376.36	METERS
ACTIVE AREA DEPTH.....	1.00	METERS
INORGANICS LIMITING FACTOR: BARIUM		
CLEARED AREA.....	55.12	ACRES
TOTAL PROPERTY AREA.....	78.60	ACRES
BUILDING AREA.....	112.	SQ M
DRAINAGE TILE LENGTH.....	0.00	METERS
GROUNDWATER WELLS.....	36	WELLS
LYSIMETERS.....	22	LYSIMETE

RUN-ON/RUN-OFF CONTROL

BERM VOLUME.....	2922.	CU M

BERM SURFACE AREA.....	8354.	SQ M
BERM HEIGHT.....	0.60	METERS
RETENTION POND CAPACITY.....	3036539.	GALLONS
RETENTION POND OPERATING VOLUME	11502.	CU M
RETENTION POND LENGTH.....	68.20	METERS
RETENTION POND WIDTH.....	68.20	METERS
RETENTION POND DEPTH.....	2.00	METERS
STORAGE TANK CAPACITY.....	130098.	GALLONS

CLOSURE

REVEGETATION SURFACE AREA.....	35.00	ACRES
SOIL CORE SAMPLES.....	18	
SOIL PORE SAMPLES.....	22	
GROUNDWATER SAMPLES.....	36	

POST CLOSURE

GROUNDWATER SAMPLES.....	324	
SOIL CORE SAMPLES.....	162	
AREA TO BE MOWED.....	55.10	ACRES

********** COST SUMMARY **********
PART 264

CAPITAL COSTS
==========

LAND PURCHASE COST.....	$	392977.
LAND CLEARING COST.....	$	143650.
UTILITIES SITE WORK COST.....	$	27564.
BUILDING COST.....	$	61824.
EQUIPMENT COST.....	$	101088.
BERM CONSTRUCTION COST.....	$	19993.
BERM REVEGETATION COST.....	$	2840.
RETENTION POND COST.....	$	198802.
SOIL DRAINAGE SYSTEM COST....	$	0.
STORAGE TANK COST.....	$	84110.
GROUNDWATER WELLS COST.....	$	125400.
LYSIMETERS COST.....	$	4400.
WIND DISPERSAL CONTROL COST..	$	39200.
SUBTOTAL.....	$	1174282.
REGULATORY ACTIVITIES.....	$	238755.
ENGINEERING FEE.....	$	117428.
CONTRACTORS FEE.....	$	117428.
INSPECTION AND TESTING FEE...	$	6490.
SPARE PARTS INVENTORY.....	$	11743.
CONSTRUCTION + FIELD EXPENSE.	$	58714.
SUBTOTAL.....	$	1724839.
CONTINGENCY.....	$	258726.
TOTAL CAPITAL COST.....	$	1983564.

O AND M COSTS

LABOR COST.....	$	42733.
GROUNDWATER MONITORING COST..	$	12249.
SOIL PORE COST.....	$	18436.
SOIL CORE COST.....	$	6442.
MAINTENANCE.....	$	19836.
UTILITIES.....	$	8093.
INSURANCE TAXES AND G & A....	$	99179.
TOTAL O & M COSTS.....	$	206967.

CLOSURE COSTS

CONTAMINATED SOIL EXCAVATING.	$	0.
REVEGETATION COST.....	$	141645.
RETENTION POND CLOSURE COST..	$	177826.
TRANSPORTATION COST.....	$	0.
DISPOSAL COST.....	$	0.
EQUIPMENT DECONTAMINATION....	$	282.
CERTIFICATION COST.....	$	6482.
TANK CLOSURE COST.....	$	4553.
WASTE PILE CLOSURE COST.....	$	0.
GROUNDWATER MONITORING COST..	$	6246.
SOIL PORE COST.....	$	4737.
SOIL CORE COST.....	$	4325.
SUBTOTAL.....	$	346096.
INSPECTION AND TESTING FEE...	$	15974.
CONTRACTORS FEE.....	$	31947.
ENGINEERING FEE.....	$	34610.
SUBTOTAL.....	$	428626.
CONTINGENCY.....	$	64294.
TOTAL CLOSURE COST.....	$	492920.

POST CLOSURE COSTS

LAND AUTHORITY +PROP DEED CST	$	5015.
GROUNDWATER MONITORING COST..	$	56217.
SOIL CORE COST.....	$	37989.
EROSION CONTROL COST.....	$	47040.
VEGETATIVE COVER COST.....	$	314604.
PARTIAL REVEG COVER COST.....	$	106271.
INSPECTION COST.....	$	5032.
SUBTOTAL.....	$	567153.
ENGINEERING FEE.....	$	56715.
SUBTOTAL.....	$	623868.
CONTINGENCY.....	$	93580.
TOTAL POST CLOSURE COST.....	$	717448.

::::::::::
FACILITY 5
::::::::::

REGION 7, PART 264 (RCRA)
==========

GENERAL CHARACTERISTICS

WASTE APPLICATION RATE.....	12803.14	MT/YEAR
WASTE APPLICATION RATE.....	49.24	MT/DAY
ACTIVE AREA.....	35.00	ACRES
ACTIVE AREA LENGTH.....	376.36	METERS
ACTIVE AREA WIDTH.....	376.36	METERS
ACTIVE AREA DEPTH.....	1.00	METERS
INORGANICS LIMITING FACTOR: BARIUM		
CLEARED AREA.....	54.29	ACRES
TOTAL PROPERTY AREA.....	77.59	ACRES
BUILDING AREA.....	112.	SQ M
DRAINAGE TILE LENGTH.....	0.00	METERS
GROUNDWATER WELLS.....	36	WELLS
LYSIMETERS.....	22	LYSIMETE

RUN-ON/RUN-OFF CONTROL

BERM VOLUME.....	2883.	CU M
BERM SURFACE AREA.....	8243.	SQ M
BERM HEIGHT.....	0.60	METERS
RETENTION POND CAPACITY.....	2249010.	GALLONS
RETENTION POND OPERATING VOLUME	8513.	CU M
RETENTION POND LENGTH.....	60.50	METERS
RETENTION POND WIDTH.....	60.50	METERS
RETENTION POND DEPTH.....	2.00	METERS
STORAGE TANK CAPACITY.....	65043.	GALLONS

CLOSURE

REVEGETATION SURFACE AREA.....	35.00	ACRES
SOIL CORE SAMPLES.....	18	
SOIL PORE SAMPLES.....	22	
GROUNDWATER SAMPLES.....	36	

POST CLOSURE

GROUNDWATER SAMPLES.....	324	
SOIL CORE SAMPLES.....	162	
AREA TO BE MOWED.....	54.26	ACRES

********** COST SUMMARY **********
PART 264

CAPITAL COSTS

==========

LAND PURCHASE COST.....	$	387952.
LAND CLEARING COST.....	$	141484.
UTILITIES SITE WORK COST.....	$	27564.
BUILDING COST.....	$	61824.
EQUIPMENT COST.....	$	101068.
BERM CONSTRUCTION COST.....	$	19728.
BERM REVEGETATION COST.....	$	2803.
RETENTION POND COST.....	$	162565.
SOIL DRAINAGE SYSTEM COST....	$	0.
STORAGE TANK COST.....	$	57848.
GROUNDWATER WELLS COST.....	$	125400.
LYSIMETERS COST.....	$	4400.
WIND DISPERSAL CONTROL COST..	$	38920.
SUBTOTAL.....	$	1104008.
REGULATORY ACTIVITIES.....	$	238755.
ENGINEERING FEE.....	$	110401.
CONTRACTORS FEE.....	$	110401.
INSPECTION AND TESTING FEE...	$	6490.
SPARE PARTS INVENTORY.....	$	11040.
CONSTRUCTION + FIELD EXPENSE.	$	55200.
SUBTOTAL.....	$	1636293.
CONTINGENCY.....	$	245444.
TOTAL CAPITAL COST.....	$	1881736.

O AND M COSTS

==========

LABOR COST.....	$	76528.
GROUNDWATER MONITORING COST..	$	12249.
SOIL PORE COST.....	$	18436.
SOIL CORE COST.....	$	8442.
MAINTENANCE.....	$	18817.
UTILITIES.....	$	9119.
INSURANCE TAXES AND G & A....	$	94087.
TOTAL O & M COSTS.....	$	237677.

CLOSURE COSTS

==========

CONTAMINATED SOIL EXCAVATING.	$	0.
REVEGETATION COST.....	$	141645.
RETENTION POND CLOSURE COST..	$	146084.
TRANSPORTATION COST.....	$	0.
DISPOSAL COST.....	$	0.
EQUIPMENT DECONTAMINATION....	$	282.
CERTIFICATION COST.....	$	6482.
TANK CLOSURE COST.....	$	2406.
WASTE PILE CLOSURE COST.....	$	0.
GROUNDWATER MONITORING COST..	$	6246.
SOIL PORE COST.....	$	4737.
SOIL CORE COST.....	$	4325.
SUBTOTAL.....	$	312207.

INSPECTION AND TESTING FEE...	$	14386.
CONTRACTORS FEE.....	$	28773.
ENGINEERING FEE.....	$	31221.
SUBTOTAL.....	$	386587.
CONTINGENCY.....	$	57988.
TOTAL CLOSURE COST.....	$	444574.

POST CLOSURE COSTS
==========

LAND AUTHORITY +PROP DEED CST	$	4953.
GROUNDWATER MONITORING COST..	$	56217.
SOIL CORE COST.....	$	37989.
EROSION CONTROL COST.....	$	47040.
VEGETATIVE COVER COST.....	$	311337.
PARTIAL REVEG COVER COST.....	$	105484.
INSPECTION COST.....	$	4998.
SUBTOTAL.....	$	563064.
ENGINEERING FEE.....	$	56306.
SUBTOTAL.....	$	619371.
CONTINGENCY.....	$	92906.
TOTAL POST CLOSURE COST.....	$	712276.

::::::::::
FACILITY 6
::::::::::

REGION 8, PART 264 [RCRA]
==========

GENERAL CHARACTERISTICS

WASTE APPLICATION RATE.....	12803.14	MT/YEAR
WASTE APPLICATION RATE.....	98.49	MT/DAY
ACTIVE AREA.....	35.00	ACRES
ACTIVE AREA LENGTH.....	376.36	METERS
ACTIVE AREA WIDTH.....	376.36	METERS
ACTIVE AREA DEPTH.....	1.00	METERS
INORGANICS LIMITING FACTOR: BARIUM		
CLEARED AREA.....	53.29	ACRES
TOTAL PROPERTY AREA.....	76.38	ACRES
BUILDING AREA.....	112.	SQ M
DRAINAGE TILE LENGTH.....	0.00	METERS
GROUNDWATER WELLS.....	36	WELLS
LYSIMETERS.....	22	LYSIMETE

RUN-ON/RUN-OFF CONTROL

BERM VOLUME.....	2836.	CU M
BERM SURFACE AREA.....	8109.	SQ M
BERM HEIGHT.....	0.60	METERS

RETENTION POND CAPACITY.....	1478431.	GALLONS
RETENTION POND OPERATING VOLUME	5596.	CU M
RETENTION POND LENGTH.....	51.21	METERS
RETENTION POND WIDTH.....	51.21	METERS
RETENTION POND DEPTH.....	2.00	METERS
STORAGE TANK CAPACITY.....	130086.	GALLONS

CLOSURE

REVEGETATION SURFACE AREA.....	35.00	ACRES
SOIL CORE SAMPLES.....	18	
SOIL PORE SAMPLES.....	22	
GROUNDWATER SAMPLES.....	36	

POST CLOSURE

GROUNDWATER SAMPLES.....	324	
SOIL CORE SAMPLES.....	162	
AREA TO BE MOWED.....	53.26	ACRES

********** COST SUMMARY **********
PART 264

CAPITAL COSTS
==========

LAND PURCHASE COST.....	$	381878.
LAND CLEARING COST.....	$	138865.
UTILITIES SITE WORK COST.....	$	27564.
BUILDING COST.....	$	61824.
EQUIPMENT COST.....	$	101088.
BERM CONSTRUCTION COST.....	$	19407.
BERM REVEGETATION COST.....	$	2757.
RETENTION POND COST.....	$	122794.
SOIL DRAINAGE SYSTEM COST....	$	0.
STORAGE TANK COST.....	$	84110.
GROUNDWATER WELLS COST.....	$	125400.
LYSIMETERS COST.....	$	4400.
WIND DISPERSAL CONTROL COST..	$	38500.
SUBTOTAL.....	$	1081021.
REGULATORY ACTIVITIES.....	$	238755.
ENGINEERING FEE.....	$	108102.
CONTRACTORS FEE.....	$	108102.
INSPECTION AND TESTING FEE...	$	6490.
SPARE PARTS INVENTORY.....	$	10810.
CONSTRUCTION + FIELD EXPENSE.	$	54051.
SUBTOTAL.....	$	1607330.
CONTINGENCY.....	$	241099.
TOTAL CAPITAL COST.....	$	1848429.

O AND M COSTS

==========

LABOR COST.....	$	42733.
GROUNDWATER MONITORING COST..	$	12249.
SOIL PORE COST.....	$	18436.
SOIL CORE COST.....	$	8442.
MAINTENANCE.....	$	18484.
UTILITIES.....	$	8093.
INSURANCE TAXES AND G & A....	$	92421.
TOTAL O & M COSTS.....	$	200858.

CLOSURE COSTS
==========

CONTAMINATED SOIL EXCAVATING.	$	0.
REVEGETATION COST.....	$	141645.
RETENTION POND CLOSURE COST..	$	111055.
TRANSPORTATION COST.....	$	0.
DISPOSAL COST.....	$	0.
EQUIPMENT DECONTAMINATION....	$	282.
CERTIFICATION COST.....	$	6482.
TANK CLOSURE COST.....	$	4553.
WASTE PILE CLOSURE COST.....	$	0.
GROUNDWATER MONITORING COST..	$	6246.
SOIL PORE COST.....	$	4737.
SOIL CORE COST.....	$	4325.
SUBTOTAL.....	$	279325.
INSPECTION AND TESTING FEE...	$	12635.
CONTRACTORS FEE.....	$	25270.
ENGINEERING FEE.....	$	27932.
SUBTOTAL.....	$	345162.
CONTINGENCY.....	$	51774.
TOTAL CLOSURE COST.....	$	396937.

POST CLOSURE COSTS
==========

LAND AUTHORITY +PROP DEED CST	$	4879.
GROUNDWATER MONITORING COST..	$	56217.
SOIL CORE COST.....	$	37989.
EROSION CONTROL COST.....	$	47040.
VEGETATIVE COVER COST.....	$	307577.
PARTIAL REVEG COVER COST.....	$	104672.
INSPECTION COST.....	$	4962.
SUBTOTAL.....	$	558457.
ENGINEERING FEE.....	$	55846.
SUBTOTAL.....	$	614302.
CONTINGENCY.....	$	92145.
TOTAL POST CLOSURE COL.....	$	706448.

::::::::::

FACILITY 7
::::::::::

REGION 9, PART 264 (RCRA)
==========

GENERAL CHARACTERISTICS

WASTE APPLICATION RATE.....	12803.14	MT/YEAR
WASTE APPLICATION RATE.....	65.66	MT/DAY
ACTIVE AREA.....	35.00	ACRES
ACTIVE AREA LENGTH.....	376.36	METERS
ACTIVE AREA WIDTH.....	376.36	METERS
ACTIVE AREA DEPTH.....	1.00	METERS
INORGANICS LIMITING FACTOR: BARIUM		
CLEARED AREA.....	53.29	ACRES
TOTAL PROPERTY AREA.....	76.38	ACRES
BUILDING AREA.....	112.	SQ M
DRAINAGE TILE LENGTH.....	0.00	METERS
GROUNDWATER WELLS.....	36	WELLS
LYSIMETERS.....	22	LYSIMETE

RUN-ON/RUN-OFF CONTROL

BERM VOLUME.....	2836.	CU M
BERM SURFACE AREA.....	8109.	SQ M
BERM HEIGHT.....	0.60	METERS
RETENTION POND CAPACITY.....	1478431.	GALLONS
RETENTION POND OPERATING VOLUME	5596.	CU M
RETENTION POND LENGTH.....	51.21	METERS
RETENTION POND WIDTH.....	51.21	METERS
RETENTION POND DEPTH.....	2.00	METERS
STORAGE TANK CAPACITY.....	86724.	GALLONS

CLOSURE

REVEGETATION SURFACE AREA.....	35.00	ACRES
SOIL CORE SAMPLES.....	18	
SOIL PORE SAMPLES.....	22	
GROUNDWATER SAMPLES.....	36	

POST CLOSURE

GROUNDWATER SAMPLES.....	324	
SOIL CORE SAMPLES.....	162	
AREA TO BE MOWED.....	53.26	ACRES

********** COST SUMMARY **********
PART 264

CAPITAL COSTS
==========

LAND PURCHASE COST..... $ 381878.

LAND CLEARING COST.....	$	138865.
UTILITIES SITE WORK COST.....	$	27564.
BUILDING COST.....	$	61624.
EQUIPMENT COST.....	$	101088.
BERM CONSTRUCTION COST.....	$	19407.
BERM REVEGETATION COST.....	$	2757.
RETENTION POND COST.....	$	122794.
SOIL DRAINAGE SYSTEM COST....	$	0.
STORAGE TANK COST.....	$	67570.
GROUNDWATER WELLS COST.....	$	125400.
LYSIMETERS COST.....	$	4400.
WIND DISPERSAL CONTROL COST..	$	38500.
SUBTOTAL.....	$	1064482.
REGULATORY ACTIVITIES.....	$	238755.
ENGINEERING FEE.....	$	106448.
CONTRACTORS FEE.....	$	106448.
INSPECTION AND TESTING FEE...	$	6490.
SPARE PARTS INVENTORY.....	$	10645.
CONSTRUCTION + FIELD EXPENSE.	$	53224.
SUBTOTAL.....	$	1586491.
CONTINGENCY.....	$	237974.
TOTAL CAPITAL COST.....	$	1824464.

C AND M COSTS
==========

LABOR COST.....	$	58880.
GROUNDWATER MONITORING COST..	$	12249.
SOIL PORE COST.....	$	18436.
SOIL CORE COST.....	$	8442.
MAINTENANCE.....	$	18245.
UTILITIES.....	$	8608.
INSURANCE TAXES AND G & A....	$	91223.
TOTAL O & M COSTS.....	$	216080.

CLOSURE COSTS
==========

CONTAMINATED SOIL EXCAVATING.	$	0.
REVEGETATION COST.....	$	141645.
RETENTION POND CLOSURE COST..	$	111055.
TRANSPORTATION COST.....	$	0.
DISPOSAL COST.....	$	0.
EQUIPMENT DECONTAMINATION....	$	282.
CERTIFICATION COST.....	$	6482.
TANK CLOSURE COST.....	$	3122.
WASTE PILE CLOSURE COST.....	$	0.
GROUNDWATER MONITORING COST..	$	6246.
SOIL PORE COST.....	$	4737.
SOIL CORE COST.....	$	4325.
SUBTOTAL.....	$	277894.
INSPECTION AND TESTING FEE...	$	12635.
CONTRACTORS FEE.....	$	25270.

ENGINEERING FEE.....	$	27789.
SUBTOTAL.....	$	343586.
CONTINGENCY.....	$	51538.
TOTAL CLOSURE COST.....		395127.

POST CLOSURE COSTS
==========

LAND AUTHORITY +PROP DEED CST	$	4879.
GROUNDWATER MONITORING COST..	$	56217.
SOIL CORE COST.....	$	37989.
EROSION CONTROL COST.....	$	47040.
VEGETATIVE COVER COST.....	$	307577.
PARTIAL REVEG COVER COST.....	$	104672.
INSPECTION COST.....	$	4962.
SUBTOTAL.....	$	558457.
ENGINEERING FEE.....	$	55846.
SUBTOTAL.....	$	614302.
CONTINGENCY.....	$	92145.
TOTAL POST CLOSURE COST.....	$	706448.

::::::::::
FACILITY 8
::::::::::

REGION 10, PART 264 (RCRA)
==========

GENERAL CHARACTERISTICS

WASTE APPLICATION RATE.....	12803.14	MT/YEAR
WASTE APPLICATION RATE.....	49.24	MT/DAY
ACTIVE AREA.....	35.00	ACRES
ACTIVE AREA LENGTH.....	376.36	METERS
ACTIVE AREA WIDTH.....	376.36	METERS
ACTIVE AREA DEPTH.....	1.00	METERS
INORGANICS LIMITING FACTOR: BARIUM		
CLEARED AREA.....	53.98	ACRES
TOTAL PROPERTY AREA.....	77.21	ACRES
BUILDING AREA.....	112.	SQ M
DRAINAGE TILE LENGTH.....	0.00	METERS
GROUNDWATER WELLS.....	36	WELLS
LYSIMETERS.....	22	LYSIMETE

RUN-ON/RUN-OFF CONTROL

BERM VOLUME.....	2869.	CU M
BERM SURFACE AREA.....	8202.	SQ M
BERM HEIGHT.....	0.60	METERS
RETENTION POND CAPACITY.....	1990008.	GALLONS
RETENTION POND OPERATING VOLUME	7533.	CU M

RETENTION POND LENGTH.....	57.63	METERS
RETENTION POND WIDTH.....	57.63	METERS
RETENTION POND DEPTH.....	2.00	METERS
STORAGE TANK CAPACITY.....	55043.	GALLONS

CLOSURE

REVEGETATION SURFACE AREA.....	35.00	ACRES
SOIL CORE SAMPLES.....	18	
SOIL PORE SAMPLES.....	22	
GROUNDWATER SAMPLES.....	36	

POST CLOSURE

GROUNDWATER SAMPLES.....	324	
SOIL CORE SAMPLES.....	162	
AREA TO BE MOWED.....	53.95	ACRES

********** COST SUMMARY **********
PART 264

CAPITAL COSTS
==========

LAND PURCHASE COST.....	$	386075.
LAND CLEARING COST.....	$	140674.
UTILITIES SITE WORK COST.....	$	27564.
BUILDING COST.....	$	61824.
EQUIPMENT COST.....	$	101088.
BERM CONSTRUCTION COST.....	$	19629.
BERM REVEGETATION COST.....	$	2789.
RETENTION POND COST.....	$	149792.
SOIL DRAINAGE SYSTEM COST....	$	0.
STORAGE TANK COST.....	$	57848.
GROUNDWATER WELLS COST.....	$	125400.
LYSIMETERS COST.....	$	4400.
WIND DISPERSAL CONTROL COST..	$	38780.
SUBTOTAL.....	$	1088296.
REGULATORY ACTIVITIES.....	$	238755.
ENGINEERING FEE.....	$	108830.
CONTRACTORS FEE.....	$	108830.
INSPECTION AND TESTING FEE...	$	6490.
SPARE PARTS INVENTORY.....	$	10883.
CONSTRUCTION + FIELD EXPENSE.	$	54415.
SUBTOTAL.....	$	1615498.
CONTINGENCY.....	$	242474.
TOTAL CAPITAL COST.....	$	1858970.

O AND M COSTS
==========

LABOR COST.....	$	76528.

GROUNDWATER MONITORING COST..	$	12249.
SOIL PORE COST.....	$	18436.
SOIL CORE COST.....	$	8442.
MAINTENANCE.....	$	18590.
UTILITIES.....	$	9119.
INSURANCE TAXES AND G & A....	$	92949.
TOTAL O & M COSTS.....	$	236311.

CLOSURE COSTS

CONTAMINATED SOIL EXCAVATING.	$	0.
REVEGETATION COST.....	$	141645.
RETENTION POND CLOSURE COST..	$	134858.
TRANSPORTATION COST.....	$	0.
DISPOSAL COST.....	$	0.
EQUIPMENT DECONTAMINATION....	$	282.
CERTIFICATION COST.....	$	6482.
TANK CLOSURE COST.....	$	2406.
WASTE PILE CLOSURE COST.....	$	0.
GROUNDWATER MONITORING COST..	$	6246.
SOIL PORE COST.....	$	4737.
SOIL CORE COST.....	$	4325.
SUBTOTAL.....	$	300981.
INSPECTION AND TESTING FEE...	$	13825.
CONTRACTORS FEE.....	$	27850.
ENGINEERING FEE.....	$	30098.
SUBTOTAL.....	$	372554.
CONTINGENCY.....	$	55883.
TOTAL CLOSURE COST.....	$	428438.

POST CLOSURE COSTS

LAND AUTHORITY +PROP DEED CST	$	4930.
GROUNDWATER MONITORING COST..	$	56217.
SOIL CORE COST.....	$	37989.
EROSION CONTROL COST.....	$	47040.
VEGETATIVE COVER COST.....	$	310153.
PARTIAL REVEG COVER COST.....	$	105354.
INSPECTION COST.....	$	4986.
SUBTOTAL.....	$	561739.
ENGINEERING FEE.....	$	56174.
SUBTOTAL.....	$	617912.
CONTINGENCY.....	$	92687.
TOTAL POST CLOSURE COST.....	$	710599.