EPA-600/R-95-045
March 1995

Office Equipment: Design, Indoor Air Emissions, and Pollution Prevention Opportunities

by:

Robert Hetes
Mary Moore
(Now at Cadmus, Inc.)
Coleen Northeim
Research Triangle Institute
Center for Environmental Analysis
Research Triangle Park, NC 27709

EPA Cooperative Agreement CR822025-01

EPA Project Officer: Kelly W. Leovic
Air and Energy Engineering Research Laboratory
Research Triangle Park, NC 27711

Prepared for:

U.S. Environmental Protection Agency
Office of Research and Development
Washington, DC 20460

TECHNICAL REPORT DATA
(Please read Instructions on the reverse before compl

PB95-191375

1. REPORT NO. EPA-600/R-95-045	2.
4. TITLE AND SUBTITLE Office Equipment: Design, Indoor Air Emissions, and Pollution Prevention Opportunities	5. REPORT DATE March 1995
	6. PERFORMING ORGANIZATION CODE
7. AUTHOR(S) Robert Hetes, Mary Moore (now with Cadmus, Inc.), and Coleen Northeim	8. PERFORMING ORGANIZATION REPORT NO. 94U-5783-00
9. PERFORMING ORGANIZATION NAME AND ADDRESS Research Triangle Institute P.O. Box 12194 Research Triangle Park, North Carolina	10. PROGRAM ELEMENT NO.
	11. CONTRACT/GRANT NO. CR 822025-01
12. SPONSORING AGENCY NAME AND ADDRESS EPA, Office of Research and Development Air and Energy Engineering Research Laboratory Research Triangle Park, NC 27711	13. TYPE OF REPORT AND PERIOD COVERED Task Final; 10/93 - 1/95
	14. SPONSORING AGENCY CODE EPA/600/13

15. SUPPLEMENTARY NOTES AEERL project officer is Kelly W. Leovic, Mail Drop 54, 919/541-7717.

16. ABSTRACT The report summarizes available information on office equipment design; indoor air emissions of organics, ozone, and particulates from office equipment; and pollution prevention approaches for reducing these emissions. Since much of the existing emissions data from office equipment are proprietary and not available in the general literature, they are not included in this report. The report covers (1) dry and wet process photoimaging machines (copiers, printers, and faxes); (2) spirit duplicators; (3) mimeograph machines; (4) digital duplicators; (5) diazo (blueprint) machines; (6) computers and computer terminals; (7) impact matric printers; and (8) other equipment types. Office equipment emits indoor air pollutants as a result of equipment operation, offgassing from components, or episodic releases related to catastrophic failure of a unit. For equipment that does not use supplies (e.g., video display terminals), emissions are primarily from offgassing of residual organics. Increased levels of ozone, total volatile organics, and particulates have been observed in the presence of operating equipment and have been associated with complaints from exposed workers. Dry-process photoimaging machines have been identified as a high priority for researching pollution prevention efforts. Wet-process photocopiers have been shown to be a major contributor of volatile organics.

17. KEY WORDS AND DOCUMENT ANALYSIS

a. DESCRIPTORS	b. IDENTIFIERS/OPEN ENDED TERMS	c. COSATI Field/Group
Pollution Particles	Pollution Prevention	13B
Office Equipment	Stationary Sources	15E
Emission	Indoor Air	14G
Design	Particulates	
Organic Compounds		07C
Ozone		07B

18. DISTRIBUTION STATEMENT Release to Public	19. SECURITY CLASS *(This Report)* Unclassified	21. NO. OF PAGES 74
	20. SECURITY CLASS *(This page)* Unclassified	22. PRICE

EPA Form 2220-1 (9-73)

NOTICE

This document has been reviewed in accordance with U.S. Environmental Protection Agency policy and approved for publication. Mention of trade names or commercial products does not constitute endorsement or recommendation for use.

ABSTRACT

The objective of this initial report is to summarize available information on office equipment design; indoor air emissions of organics, ozone, and particulates from office equipment; and pollution prevention approaches for reducing these emissions. It should be noted that much of the existing emissions data from office equipment are proprietary and not available in the general literature and are therefore not included in this report. This report covers (1) dry and wet process photoimaging machines (copiers, printers, and faxes); (2) spirit duplicators; (3) mimeograph machines; (4) digital duplicators; (5) diazo (blueprint) machines; (6) computers and computer terminals; (7) impact matrix printers; and (8) other equipment types.

The office environment contains many types of equipment that emit indoor air pollutants. Emissions may occur as a result of equipment operation, offgassing from components, or episodic releases related to catastrophic failure of a unit. For equipment that does not use supplies (e.g., video display terminals) emissions are primarily from offgassing of residual organics. In general, published data on the emissions from office equipment are limited. However, increased levels of ozone, total volatile organic compounds (TVOC), and particulates have been observed in the presence of operating equipment and have been associated with complaints by exposed workers. Published emission rates, IAQ impacts, and potential pollution prevention solutions associated with the equipment types are discussed in this report.

Dry-process photoimaging machines have been identified as a high priority for researching pollution prevention efforts. Dry-process photoimaging machines use a technology and design which is found in laser printers, most photocopiers and fax machines. These machines are prevalent in most office environments and are a known source of ozone (up to 158 μg/sheet or 1350 μg/min), particulate, and VOC (up to 16 μg/sheet) emissions. Of all dry-process machines, photocopiers have been selected for initial focus because they are common and range in size from small personal models that can affect localized IAQ and lead to significant personal exposure to large machines with the potential for relatively high emission rates which can individually impact IAQ. Laser printers were identified as a secondary priority for pollution prevention research given that they are much smaller in terms of throughput and concomitant emission rates than photocopiers.

Wet-process photocopiers have been shown to be a major contributor to indoor air VOC levels (up to 35 mg/m^3) in several studies and have significantly greater emissions than dry-process machines on a per unit basis. However, wet-process machines constitute a small part of the photocopier market. Computers and dot matrix printers have emissions generally related to outgassing from electronic components and basic construction materials. These emissions are highest for new machines and diminish rapidly with time. Other equipment that may have high individual emission rates includes spirit duplicators, mimeograph machines, plotters, and diazo (blueprint) machines. However, this equipment is rather specialized, with limited numbers of units in operation.

TABLE OF CONTENTS

Abstract iii
Lists of Figures and Tables vii

1.0 Introduction 1
1.1 Background 1
1.2 EPA Research on Office Equipment 1

2.0 Photoimaging Machines 4
2.1 Equipment Design and Operation 4
2.2 Dry-Process Photoimaging Machines 9
2.2.1 Dry-Process Photocopiers 10
2.2.2 Dry-Process Laser Printers 10
2.2.3 Fax Machines 10
2.2.4 Supplies Used 11
2.2.5 Indoor Air Emissions Data--Dry Process Photoimaging Machines . . 13
2.2.5.1 Ozone 14
2.2.5.2 Particulates 15
2.2.5.3 Volatile Organic Compounds (VOCs) 16
2.3 Wet-Process Photoimaging Machines 17
2.3.1 Wet-Process Photocopiers 17
2.3.2 Wet-Process Printers 19
2.3.3 Supplies Used 20
2.3.4 Indoor Air Emissions Data--Wet Process Photoimaging Machines . . 20
2.4 Health Concerns 21
2.5 Pollution Prevention Opportunities 23

3.0 Spirit Duplicators 27
3.1 Equipment Design and Operation 27
3.2 Supplies Used 27
3.3 Indoor Air Emissions Data--Spirit Duplicators 30
3.4 Health Concerns 31
3.5 Pollution Prevention Opportunities 33

4.0 Mimeograph Machines 35
4.1 Equipment Design and Operation 35
4.2 Supplies Used 35
4.3 Indoor Air Emissions Data--Mimeograph Machines 37
4.4 Health Concerns 38
4.5 Pollution Prevention Opportunities 38

5.0 Digital Duplicators 39

Preceding page blank

TABLE OF CONTENTS (continued)

5.1 Equipment Design and Operation 39
5.2 Supplies Used 39

5.3 Indoor Air Emissions Data--Digital Duplicators 41
5.4 Health Concerns 41
5.5 Pollution Prevention Opportunities 41

6.0 Diazo (Blueprint) Machines 42
6.1 Equipment Design and Operation 44
6.2 Supplies Used 44
6.3 Indoor Air Emissions Data--Diazo Machines 45
6.4 Health Concerns 46
6.5 Pollution Prevention Opportunities 46

7.0 Computers and Computer Terminals 47
7.1 Equipment Design and Operation 47
7.2 Supplies Used 48
7.3 Indoor Air Emissions Data--Computers and Computer Terminals 48
7.4 Health Concerns 50
7.5 Pollution Prevention Opportunities 50

8.0 Impact Matrix Printers 51
8.1 Equipment Design and Operation 51
8.2 Supplies Used 51
8.3 Indoor Air Emissions Data--Impact Matrix Printers 51
8.4 Health Concerns 52
8.5 Pollution Prevention Opportunities 52

9.0 Other Equipment Types 53
9.1 Specialized Equipment 53
9.2 Office Products 55

10.0 Summary 56

11.0 References 63

Appendix A - Other Sources of Information on Indoor Air Emissions from Office Equipment A-1

Lists of Figures and Tables

Figure

1 Six Steps in the Photoimaging Process 5
2 How Photoimaging Transfers the Image to Paper 6
3 Schematic of Toner Transfer to and from Photoconductive Drum 8
4 Spirit Duplicator 28
5 The Mimeograph Process 36
6 Cross Section of Typed Stencil 36
7 Dry Diazo Copier 43
8 Typical TVOC Emissions Profile from Video Display Terminals 49

Table

1 Photocopier Sales Figures 10
2 Supply Usage for Various XEROX Copiers 12
3 Ozone Produced by Photocopiers Before and After Maintenance 15
4 VOC Emitted from Copied Paper (listed according to GC retention time) 18
5 TVOC Emissions from Fresh Copies 19
6 Health Concerns for Major Indoor Pollutants Related to Equipment 24
7 Duplicating Fluid Formulations 29
8 Cost Comparison of One Photocopier Model and One Spirit Duplicator Model 30
9 Methyl Alcohol Air Concentrations in Spirit Duplicator Operator's Breathing Zone (ppm) 32
10 Methly Alcohol Breathing Zone Air Concentrations of Workers Collating and Stapling Papers 33
11 Mimeograph Duplicating Fluid Formulations 37
12 A. B. Dick Company Digital Duplicator Supplies 40
13 Annual Sales of Diazo Copiers in the United States 44
14 Computer Sales Figures 47
15 Summary of Office Equipment Emission Information 57
16 Annual Sales Figures for Selected Office Equipment (Number of Units) 59

1.0 INTRODUCTION

1.1 Background

Several recent studies by the U.S. Environmental Protection Agency (EPA) have identified indoor air quality (IAQ) as one of the most important environmental risks to the Nation's health (U.S. EPA, 1987, and U.S. EPA, 1990). People spend approximately 90 percent of their time in indoor environments such as residences, public buildings, and offices, where concentrations of many pollutants are frequently higher than in outdoor urban air. Some activities can lead to indoor air pollutant levels up to 1,000 times higher than outdoor levels (U.S. EPA's TEAM Studies).

Approaches for improving IAQ to date have generally focused on mitigation techniques such as ventilation and air cleaning. These traditional mitigation approaches do not prevent pollution--the pollution is simply transferred to another medium or outdoors. Depending on the source of indoor air pollution, another approach is to focus on source reduction, ensuring that pollutants do not enter the indoor environment in the first place. In the Pollution Prevention Act of 1990, Congress declared that pollution should be prevented or reduced at the source whenever feasible. Source reduction may be accomplished by modifications to equipment, processes, and procedures; reformulations or redesign of products; substitution of raw materials; and improvements in use procedures. In multimedia pollution prevention, all environmental media are considered, and transfer of risks or pollution from one medium to another is avoided.

EPA's Air and Energy Engineering Research Laboratory (AEERL) is responsible for EPA's indoor air engineering research. AEERL's Indoor Air Branch (IAB) is integrating IAQ and pollution prevention into a strategic approach to indoor air source management. IAB's pollution prevention/IAQ research objective is to employ accepted pollution prevention techniques to reduce indoor air pollution through the development of low-emitting materials (LEM) and/or low-impact materials (LIM). An LEM is a material that is used in the same manner in the same indoor environment as another material but emits less pollution. An LIM is a material or product that is designed to be more amenable to control (e.g., ventilation) than a similar material used in the same manner in the same indoor environment.

1.2 EPA Research on Office Equipment

The office environment has changed rapidly with the advent of electronic technologies; with photocopiers, computers, printers, and fax machines becoming commonplace. Office equipment has been shown to contribute to increased levels of indoor air pollutants and health complaints. Wolkoff et al., (1992) observed increased levels of ozone, formaldehyde, total volatile organic compounds (TVOC) and particulates in a chamber evaluation of operating office equipment (three personal computers, one photocopier, and one laser printer). Thirty human subjects participating in the experiment had a significantly increased perception of

headache, mucous membrane irritation, and dryness in the eyes, nose, and throat as well as reported dry and tight facial skin when exposed to the operating equipment within the chamber. Other researchers (National Institute for Occupational Safety and Health [NIOSH] 1991; Kjaergaard and Brandt 1993; Susie 1991; and Gallardo et al. 1994) have also reported that the operation of office equipment can contribute to increased indoor air pollutant concentrations, and has, in some cases, been associated with complaints by exposed workers.

In October 1993, Research Triangle Institute (RTI), Underwriters Laboratories, Inc. (UL), and AEERL's Indoor Air Branch initiated a cooperative agreement to research pollution prevention approaches for reducing indoor air emissions from office selected types of equipment. The objectives are to characterize indoor air emissions from office equipment, then to identify and evaluate pollution prevention approaches (i.e., the development of LEMs/LIMs). Understanding the emission rates of individual pollutants can provide the opportunity to determine whether specific adverse health effects may occur, allow for a prioritization of pollutants based on total quantity emitted or relative toxicity, and provide information on the root cause of emissions. The research approach includes literature reviews on emissions from office equipment; development of a standard test method, emission testing and modeling of selected equipment; and cooperative interaction with industry to identify, evaluate, and implement research, development, and demonstration activities to reduce the indoor air impact from office equipment. A group of technical advisors has been formed by IAB and RTI to provide technical expertise for the project. The advisors include trade association representatives, industry representatives, and academia.

The objective of this report is to summarize available information on office equipment design; indoor air emissions of ozone, particulates, and organics from office equipment; and potential pollution prevention approaches for reducing these emissions. It should be noted that much of the existing emissions data from office equipment are proprietary and not available in the general literature and are therefore not included in this report. This report covers the following types of equipment:

- Dry and wet process photoimaging machines (copiers, printers, and faxes)
- Spirit duplicators
- Mimeograph machines
- Digital duplicators
- Diazo (blueprint) machines
- Computers and computer terminals
- Impact matrix printers
- Other equipment types

This report emphasizes photoimaging machines because of their prevalence, the projected growth in sales, and potential opportunities for pollution prevention. Equipment such as very large, high-volume duplicating machines and offset printing presses that are commonly used at quick-print shops are not included in this report. Office products such as

adhesives, correction fluids, pens/markers, and carbonless copy paper may contain chemicals that impact IAQ. However, office products are not being researched under this project, but are addressed briefly in Section 9.2. In addition, the evaluation of electromagnetic fields that may result from the operation of office equipment is outside the scope of this research.

Each section of this report is divided into subsections addressing: equipment design and operation, supplies used, indoor air emission data, health concerns, and potential pollution prevention opportunities.

A final report covering the research conducted under this cooperative agreement between EPA, RTI, and UL will be issued upon completion of the research in 1996. Additional information on indoor air emissions from office equipment is available from the sources listed in Appendix A.

2.0 PHOTOIMAGING MACHINES

The development of electrophotography in 1960 revolutionized the copier market. Photocopying has gained greatly in popularity and is now the fastest, most convenient, and economical method of duplicating small numbers of copies from a single original. Much of the electrophotography technology has also been employed in the development of other office equipment such as printers and fax machines. Offset printing and duplicators are still used where high-volume or hundreds of copies of a single original are required, such as in-house printing departments and quick-print shops. The advantage of offset printing and duplicators is that cost per copy decreases as the number of copies from a single original increases.

2.1 Equipment Design and Operation

Electrophotography is used in copiers, laser printers, and fax machines and is based on the electrostatic transfer of toner to and from a charged photoconductive surface. The critical component of any photoimaging process is the photoconductive drum, which typically has a photoconductive coating such as selenium, amorphous silicon, organic dyes and pigments, or zinc oxide. These materials have the unique property of holding an electrostatic charge in the dark and losing the charge when exposed to light. In electrophotography the reflected light from the white areas of an original causes the charge to be lost. The basic steps in image processing are shown in Figure 1. They are: (1) charge, (2) expose, (3) develop, (4) transfer, (5) fuse, and (6) clean. This six-step process is repeated for each copy. How the image is processed during these steps is shown in Figure 2.

(1) Charge: Charging the photoconductive drum is the first step in the process. In the charging step a uniform charge is imparted on the entire surface of the drum. Whether the drum is positively or negatively charged during this process depends on the type of photoconductive materials used. For the purposes of illustration, a positively charged selenium-based photoconductive material is described. In conventional laser print and photocopier designs, electrically charged corona wires are used to add a uniform primary charge across the surface of the photosensitive drum. In response to concerns of ozone emissions, Canon, Inc., has developed an alternative dry-process photoimaging system in which the corona wires are replaced with "charging" rollers. Unlike the corona wires, which are separated from the drum by a small distance, the charging rollers are pressed directly against the drum, requiring far lower voltages to generate the needed charge. This technology is now being introduced in laser printers as well.

(2) Expose: During the exposure step the image from the original is reflected onto the surface of the drum. The original image (dark area) remains positively charged on the surface of the drum as the white areas of the original lose their charge on the drum when exposed to the reflected light.

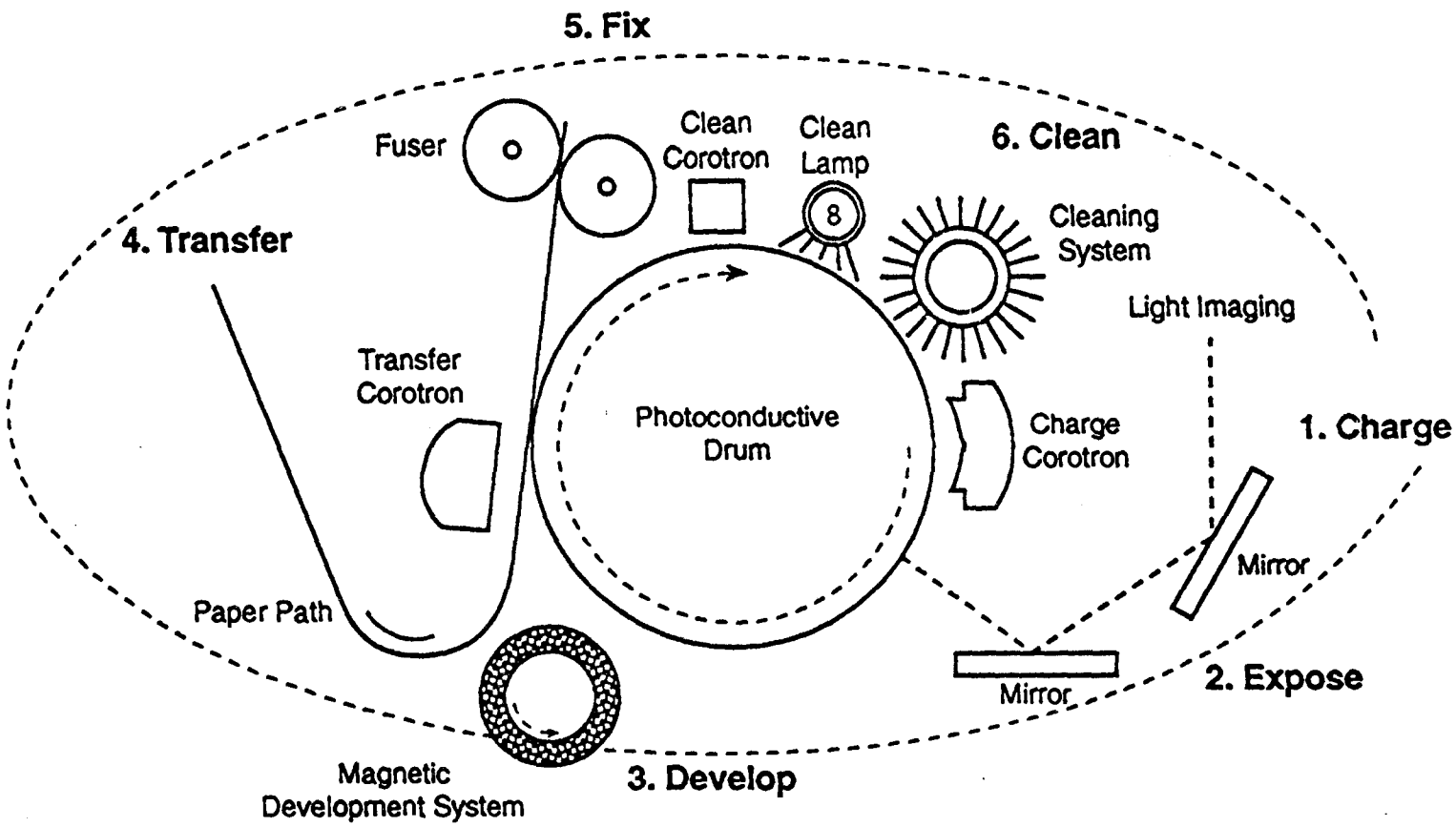

Source: Adapted from Maren, T., Dry Toner Fundamentals, Xerox Research Center, 8th Annual Toner and Developer Conference and Tutorial, September 1991, Diamond Research Company.

Figure 1. Six steps in the photoimaging process.

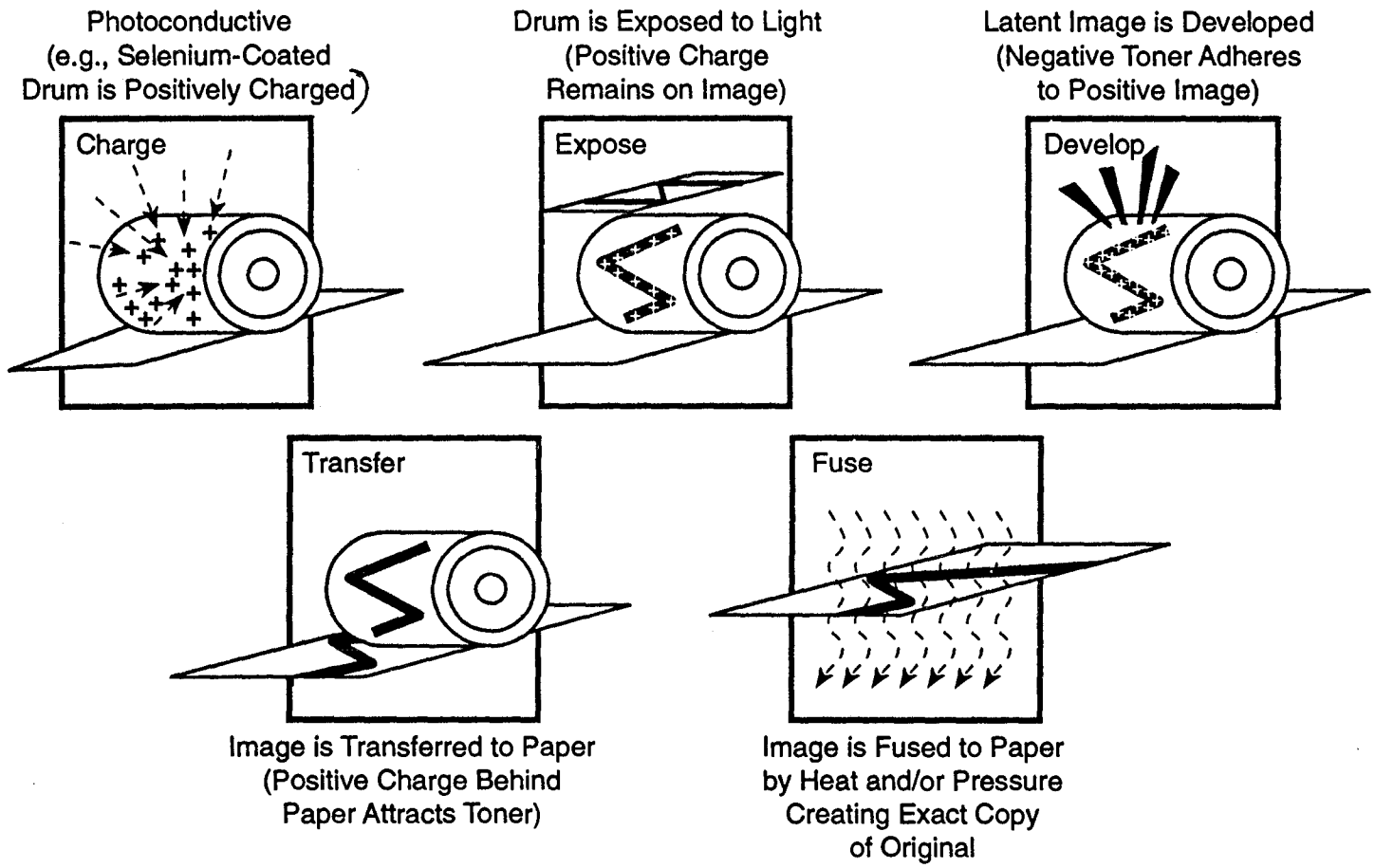

Source: Adapted from Maren, T., Dry Toner Fundamentals, Xerox Research Center, 8th Annual Toner and Developer Conference and Tutorial, September 1991, Diamond Research Company.

Figure 2. How photoimaging transfers the image to paper.

(3) Develop: The image is developed when the negatively charged toner particles or aerosols are attracted to the positively charged areas of the image on the drum (see Figure 3). Developer makes the latent electrostatic image on the drum visible. In general, the developer can consist of either one (toner alone) or two components (toner and carrier). The physical processes by which the toner is transferred to the charged image differs between these two. In the two-component system (Figure 3a), the carrier and toner are oppositely charged. A magnetic field is used to align the carrier (with attached toner) on a developing cylinder to form a "brush" that brings the toner closer to the charged photoconductive drum. The charged image on the drum then attracts the toner. In a one-component system (Figure 3b), the toner is made up of a resin (color) and magnetic material. Again, a magnetic cylinder is used to align and uniformly collect the toner particles, which then are brought close to the drum and attracted to the charged image. A blade is sometimes used to ensure uniform coverage of toner on the magnetic drum.

(4) Transfer: Once the image has been developed on the drum it must be transferred to the paper. To transfer the image to the paper, a transfer corona wire applies a positive charge through the paper, which electrostatically attracts the negatively charged toner particles off the photo drum and onto the surface of the charged paper (see Figure 3). In the charged roller system is used to apply the positive charge to the paper. One charging roller sits on top of the photosensitive drum within the toner cartridge. The other charging roller (the transfer roller) is contained within the printer housing and sits under the photosensitive drum. The paper travels between the transfer roller and the photosensitive drum. The contact between the charging rollers and the photosensitive drum prevents the formation of electrical arcs. About 75 percent of the toner is transferred to the copy paper. The exact transfer efficiency depends on the environment during transfer and the kind of paper used (Canon, 1990). Again, the advantage of charging roller system is reduction in ozone emissions.

(5) Fuse: Fusing refers to the process in which the toner that was transferred to the copy paper is permanently bound to the paper. There are essentially two kinds of fixing methods: heat fixing and pressure fixing (see Figure 2). In the heat fixing process, the paper passes through two drums, one of which is heated to a temperature of about 160 to 200 ^{o}C, which heats the other drum upon contact. The paper passes between the heated rollers and the toner is melted and pressed into the fibers of the paper, thus fixing the toner to the paper. In a wet-process system, the heat results in the volatilization of the carrier leaving the nonvolatile portion of the toner behind. In the pressure fixing method, the two rollers are in very firm contact with each other. The paper passes between these rollers and the toner is pressed firmly onto and into the paper, thus fixing the image.

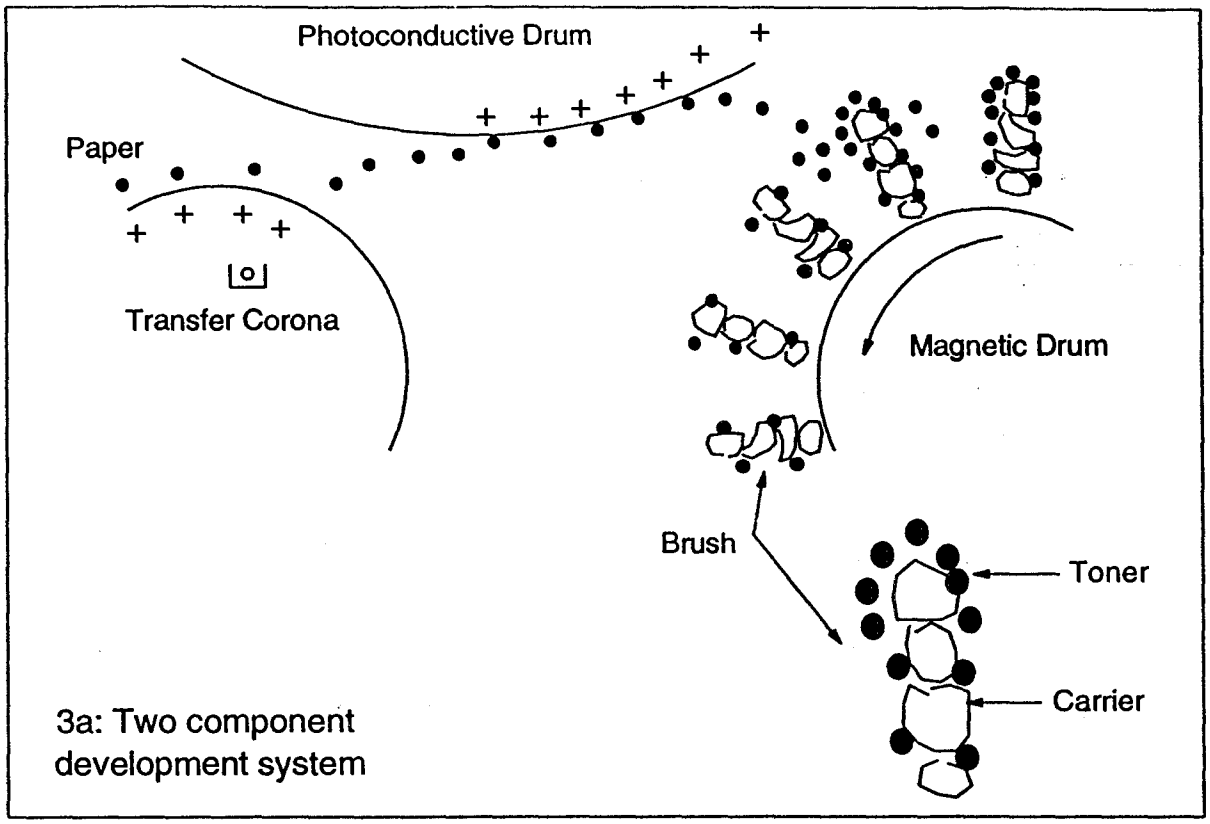

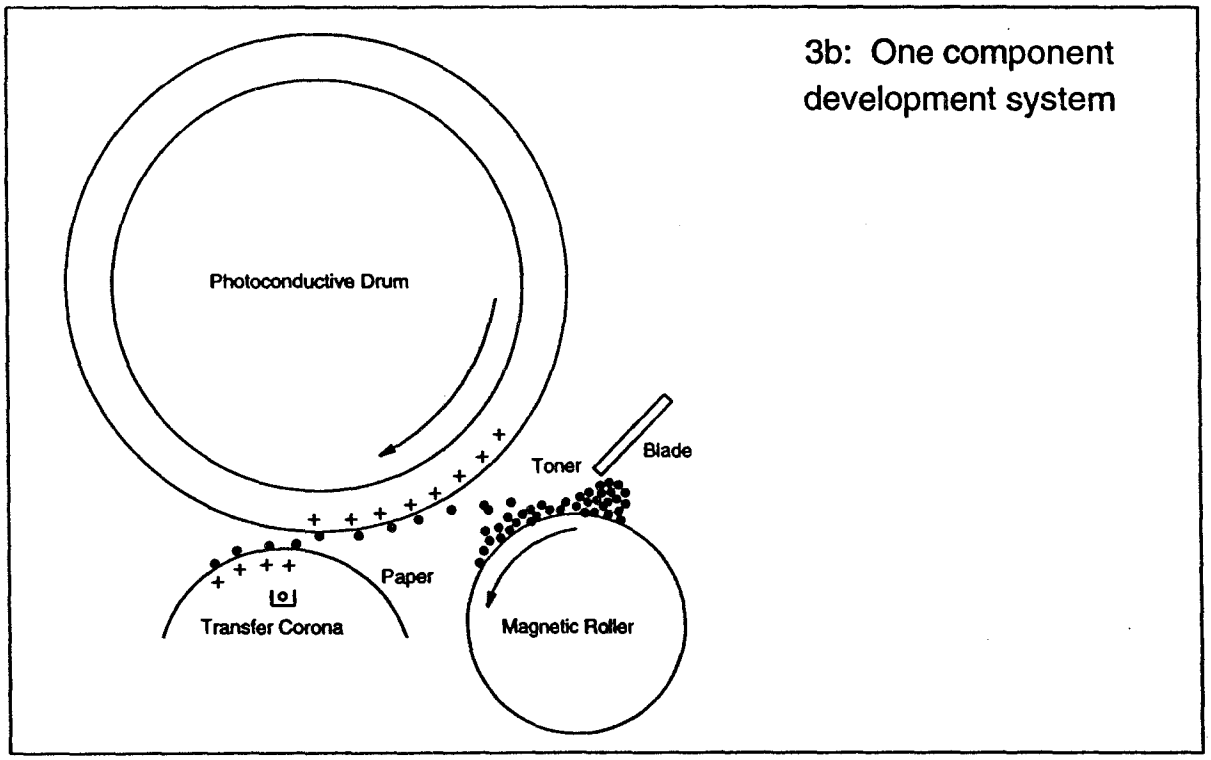

Figure 3. Schematic of toner transfer to and from photoconductive drum.

Source: Adapted from Canon, 1990

(6) Clean: Cleaning refers to the process in which any toner remaining on the surface of the photoconductive drum after transfer is cleaned off so that the next copy image will be clear and distinct. Cleaning is primarily a physical process in which a blade, brush, or web (woven fibers) is wiped across the drum surface to remove residual toner particles and collect the waste toner. In some machines, a cleaning lamp may be used to remove the electrical charge from the drum prior to the application of the web, blade, or brush.

All photoimaging processes (e.g., copiers, laser printers, fax machines) contain the six basic steps outlined above; however, features may differ with different equipment. In general, there are two basic types of machines--dry-process and wet-process. Dry-process machines use dry toners and wet-process machines use liquid toners. See Sections 2.2 and 2.3 for a discussion of dry-process and wet-process machines, respectively.

Wet-process printers also differ in that they do not use a true photoimaging process; that is, a photosensitive drum is not used to impart the image. Instead, the image is formed when a nozzle (ink-jet or bubble jet) "sprays" the ink toward the paper character by character and is later developed or fused in a manner similar to other machines.

Color imaging can be done using both wet and dry processes. In general, color printing/copying uses four colors (black, yellow, cyan, and magenta) that are applied in four passes, with an individual color added at each pass. As a result, color copy and print times are significantly greater than those for black and white images. In general, color copiers also use lower fuser temperatures.

Other differences arise in the exposure step. For example, photocopiers use a high-intensity light source to reflect the image onto the surface of a photoconductive drum while laser printers and fax machines use a laser to impart the same charge on to the drum. However, once the photoconductive drum has been charged, the process is essentially the same for all machines.

2.2 Dry-Process Photoimaging Machines

Dry-process photoimaging uses dry powder toners. The two-component developer described above consists of toner (mainly carbon, resin, and additives for stability and fluidity) and carrier (iron powder). The size of the toner particles typically ranges from 5 to 10 μm, and the carrier particles range from 50 to 200 μm. The one-component developer consists of toner alone, which is mainly resin and some magnetic material. The sizes of these particles are similar to the toner particles in the two-component system (about 10 μm). Toners are made primarily of styrene-based acrylates or polyester resins with other ingredients added as stabilizers (e.g., salicylic acid chromium (III) chelate) and pigments (for color toner) (Canon, 1994). Upon transfer of the toner to the charged paper, heat and pressure from the fuser rollers fuse the toner to the paper and set the copied or printed image. Additional information

for dry process photocopiers, laser printers, and fax machines is presented in sections 2.2.1 to 2.2.3 followed by a discussion of supplies, emissions data, and pollution prevention opportunities which may apply to all photoimaging machines.

2.2.1 Dry-Process Photocopiers

Dry-process photocopiers make up a majority of the photocopier market. They can be found in a wide range of locations--small to large offices as well as commercial and institutional settings. Photocopiers can range from personal copiers which make less than 25 copies per minute (cpm), to the larger units used for production, which can copy over 100 pages a minute. In general, higher fuser roller temperatures and smaller toner powder particle sizes are used in larger and faster machines to hasten the fusing process, though the chemical makeup of the toner powders may also be different. The temperature of the fuser rollers can be up to about 250 °C in the faster machines, as compared to 160 to 200 °C found in most other machines. Recent sales and projected figures for three size categories of dry-process photocopiers are provided in Table 1.

Table 1. Photocopier Sales Figures

Size	1993 Units Shipped	Projected Annual Growth Rate (1993-2004)
Low (11-24 cpm)	960,000	7%
Med (25-39 cpm)	380,000	6.5%
High (40+ cpm)	183,000	7%

Source: Computer and Business Equipment Manufacturers Assoc., 1994

2.2.2 Dry-Process Laser Printers

Laser printers are used where high-quality images are desired. They range in size from small personal printers to larger-capacity printers for dedicated office environments. The speeds for printers are much slower than for copiers, usually up to 10 pages per minute. Sales figures for laser printers specifically are not available. However, they are included in the category of non-impact printers (which also includes ink-jet and bubble-jet printers) of which about 1.77 million units were sold in 1991 (U.S. Department of Commerce, 1991). The annual growth rate for printers is projected at 7 percent for the years 1993-2004 (CBEMA, 1994).

2.2.3 Fax Machines

Fax machines transfer documents electronically over telephone lines. The image is first scanned (digitizing the image) by the sending fax machine, then the electronic information

is sent over phone lines to the receiving fax, which prints the digital image. Plain paper faxes use the same process as a printer to produce the final document. Early models relied on a thermal printing process (described in Section 9), but customers tended to be dissatisfied with the final document quality resulting from these machines. As a result, dry-process (plain paper) fax machines have gained in popularity. A total of 2,385,650 fax machines were shipped in the United States in 1993, and that number is expected to increase by 10 percent annually over the next 10 years (CBEMA, 1994).

2.2.4 Supplies Used

In general, consumable supplies for dry-process photoimaging units that may be associated with indoor air emissions include toner and, in some cases, developer and fuser lubricant. As described above in Section 2.1, a one-component or two-component system may be used. Toners, which supply the image, generally consist of a polymeric resin carrier (e.g., styrene-based copolymers) between 5 and 10 μm in diameter. Machines which use the one-component system use toner only. In a one-component system, the toner may also contain a magnetic material to aid in the transfer of the toner. Carriers are used in the two-component system and are sometimes referred to as developer. These particles generally consist of iron particles between 50 and 200 μm in size and serve to deliver the toner particles to the photoconductive drum. As manufacturers work to improve print quality and resolution, changes are likely to occur in the formulation of toners. In general, the size of toner particles will likely be smaller to obtain better resolution in monochrome printers. This decrease in toner particles may affect IAQ since emitted particles may be respirable.

Toner is a consumable material that requires periodic replenishment. Developers (carrier particles) are not directly consumed. However, over time, their efficiency to carry toner particles is reduced and they must be replaced. The used carrier particles are considered a waste. In addition, any residual toner particles that are cleaned from the drum after each processed page are also collected and disposed of as waste. In some machines, a fuser lubricant is used to maintain proper operation and to protect fuser rollers from wear. This fuser lubricant is self-contained within the machine and requires periodic replacement and disposal.

There are four basic types of toner container/delivery systems: tube, cartridge, box, and bottle systems. The type of toner delivery system used often depends on the size and capacity of the machine. Smaller personal-size machines use the tube and cartridge systems, in which the entire toner system is self-contained and replaceable along with the drum, corona unit (or charged rollers), and cleaning unit (e.g., blade). Large-capacity machines require larger delivery systems to allow for more copies to be made before toner is depleted. They typically use the box and bottle systems, which allow for toner refilling without changes in the associated hardware. The box system is a self-contained toner system with minimal possibility for spillage during refilling. In the bottle system, the risk of spillage is minimized by a locking mechanism used to seal the bottle and its contents from the environment during the

Table 2. Supply Usage for Various XEROX Copiers

Copier	Throughput	Toner		Developer		Fuser	
	(copies/min)	Yield[a]	Weight	Yield[a]	Weight	Yield[a]	Volume
Docutech/5090	135	73,000	3.2 kg	750,000	5.9 kg	150,000	1 L
5052/5053	55	50,000	1.8 kg	220,000	5 kg	50,000	1 L
5775 (Black)	30	36,000	0.5 kg	55,000	.09 kg	200,000	1 L
(Color, ea)	7.5	6,000	0.5 kg	121,000	0.9 kg		
5011	12	4,000	0.4 kg	included in toner cartridge	N/A	N/A	N/A

[a]Yield = Number of copies.

Source: Buyers Laboratory, Inc., 1994

filling process. For Canon copiers, the yield from each system (assuming 12 percent coverage, which is normal for text) ranges from 2,000 copies per container for the tube system to 21,000 copies per container for the bottle system (M. Murphy, Gray and Creech Office Systems, personal communication, February 8, 1994). Table 2 compares usage rates for supplies for several monochromic Xerox models.

In dry-process color copiers and printers, four separate toners are required. In Canon color copiers, one refill of toner containing about 600 grams of each color is assumed to be able to copy 6,700 copies at 35 percent coverage (considered average for printing color graphics), and developer must be replenished and waste disposed of about every 10,000 to 15,000 copies.

Products or supplies may be used in cleaning or maintenance of the machines. Methyl alcohol or commercial glass cleaner may be used to clean mirrors, lenses, and external parts of the machine. The rollers in the machines are often made of rubber, which must be routinely treated to maintain the material integrity. A mixture of organic solvents is used for this purpose that may include aromatics (e.g., xylene), alcohols, and ketones (e.g., hexone). Small amounts of light machine grease, synthetic aerosol lubricant, and/or light machine oil may be used to lubricate internal parts of the machines (Northeim et al., 1993). Copiers are mechanical equipment with parts that are subject to wear and require routine replacement. Drums are subject to wear and must be replaced--every 20,000 copies for personal copiers to every 3 million copies for the larger production units (M. Murphy, Gray and Creech Office Systems, personal communication, February 8, 1994). Other items requiring replacement on copiers (every 100,000 to 1 million copies) include the rubber feeder rollers, cleaning web, and fuser rollers (see Figure 1). The corona wires and belts also require routine replacement or cleaning. The replacement of all parts subject to wear is done by a technician rather than the owner/operator.

2.2.5 Indoor Air Emissions Data -- Dry Process Photoimaging Machines

Types of emissions from dry-process photoimaging machines, related supplies, and processed paper (i.e., copied or printed) include: ozone, particulates, and organics. Brooks and Davis (1991) identified the following specific compounds emitted from photoimaging equipment:

Ammonia	Nonanal
Benzaldehyde	Ozone
Benzene	Styrene
Black carbon	Terpene
Butyl methacrylate	Toluene
Cyclotrisiloxane	Trichloroethylene
Ethylbenzene	1,1,1-Trichloroethane

Isopropanol	o-, m-, p-Xylenes
Methylmethacrylate	Zinc stearate combustion products.

2.2.5.1 Ozone. Ozone is generated from the interaction of ultraviolet radiation with oxygen during electrostatic discharges and from reactions with nitrogen dioxide and hydrocarbons. The hydrocarbons may be produced from office machines, may be found in the indoor air as a result of other indoor sources, or may result from infiltration of outdoor air. Nitrogen dioxide may be produced by other indoor sources or result from infiltration of outdoor air. Ozone does not persist in the indoor environment because it quickly reacts and binds with materials in the surrounding environment. As a result, the indoor concentration of ozone would be expected to decrease with distance from the source and with time. The electrically charged corona wires used to add a uniform primary charge across the surface of the photosensitive drum, and also to attract the toner from the drum to the paper surface, can contribute to ozone production and emissions. High voltages are applied to the corona wires to attain the needed charge, and the associated electrical arcing results in the production of ozone.

Actual measurements of ozone emissions from photocopiers, typically using direct reading instruments sampling the outlet air, are variable. According to some studies, advanced dry-process photocopiers, even when recently serviced, can emit at about 4 μg ozone per copy (Etkin, 1992). Greenfield (1987) found that with extended use, ozone production can peak at 131 μg per copy, with an average of around 40 μg/copy. By comparison, Allen et al. (1978) tested two photocopy machines and found that emissions ranged from 48 to 158 μg per copy and that ozone emissions have been found to be dependent on copying rates, light intensity, and the maintenance status of the equipment. In small poorly ventilated rooms these emission rates were sufficient to produce incremental steady state ozone concentrations of up to 396 $\mu g/m^3$ (0.202 ppm) which exceeds the recommended threshold limit value (TLV) of 0.1 mg/m^3 (level not to be exceeded) for ozone as established by the American Conference of Governmental Industrial Hygienists (ACGIH). Selway et al., (1980) studied ten photocopier machines and found ozone emissions to range from less than 4 to 54 μg/copy. Concentrations in the breathing zone of the operator were measured under atypical conditions (zero ventilation) ranged from less than 1 to 300 $\mu g/m^3$ (0.153 ppm) which also exceeds the TLV. Hannsen and Andersen (1986) surveyed 69 different photocopying machines, which were found to emit ozone at rates ranging from 0 to 1,350 μg/min, with a mean of 259 μg/min. The maximum concentration in the breathing zone of the operators was found to be between 0.001 or less and 0.15 ppm (2 or less and 300 $\mu g/m^3$) under very low ventilation conditions.

Eggert et al., (1990) tested 37 different laser printers in a climatized room with emissions sampled in the outlet air. The average emission rate of ozone was about 440 μg/min. They estimated this would result in concentrations of up to 720 $\mu g/m^3$ (0.38 ppm) (based on an ACH of 1.0 and room volume of 25 m^3) which exceeds recommended health levels.

Ozone filters are commonly used on photocopiers and laser printers. These filters do not remove the ozone from the air, but catalytically convert it to oxygen. These filters must be replaced (in smaller machines) or cleaned periodically (in larger models) to ensure proper removal of ozone because the filter media can be exhausted with time, reducing the effectiveness of ozone removal. Hannsen and Andersen (1986) evaluated the removal efficiency of three different filters. Activated carbon granulate ranging in thickness from 9 mm to 14 mm showed a filter efficiency of 89 to 98%. Polyester and polyurethane foam impregnated with activated carbon, ranging from 8 to 12 mm in thickness showed filter efficiencies of 5 to 72%. The efficiency of the filter was found to be related to thickness of the filter, air velocity through the filter, initial ozone concentration, and the degree of pollution on the filter. Likewise, Eggert et al., (1990) showed similar results on the effect of ozone filters for laser printers. The average emission rate for 37 printers tested showed ozone emissions were reduced to an average of 100 μg/min with a filter, down from 440 μg/min without filters.

Several researchers have found that the amount of ozone produced per copy or per unit time is greatly reduced following servicing (routine maintenance) and emissions increased over time after maintenance. Selway et al, (1980) clearly showed the effectiveness of filter servicing on reducing ozone production from photocopiers. As shown in Table 3, the amount of ozone produced per copy was greatly reduced following routine maintenance. Machines were serviced after about 64,000 copies had been made. Following servicing, the quantity of ozone gradually returned to preservicing levels after only about 15 days or 3,000 copies. Therefore, it is also possible that emissions may increase with equipment age.

Table 3. Ozone Produced by Photocopiers Before and After Maintenance

Machines	Emissions (μg/copy)	
	Before Service	After Service
IBM 6800	20	4
Xerox 4000	131	4
Xerox 4000	63	<3
Xerox 3400	49	<1
Kodak 100	16	<1

Source: Selway et al., 1980.

Etkin (1992) reports that some researchers have downplayed the significance of indoor sources of ozone, demonstrating that in areas with high outdoor ozone levels, most indoor ozone actually originates from outdoors. However, high densities of this equipment and/or deficiencies in ventilation systems can lead to elevated ozone levels that may cause adverse health effects.

2.2.5.2 Particulates. The toners used in dry-process photoimaging machines contain a wide variety of chemicals in addition to fine, black carbon (BC) particles or dyes and pigments

for color toners. Schnell et al. (1992) used a continuous tape-feed Aethalometer to measure the BC particulate emissions in a photocopier room in a six-story office/research building. The room's interior measurements were 20 ft x 15 ft x 10 ft. The photocopier was a recent model, designed for medium-volume office use. At the end of the copying run, which was 200 to 800 copies, the photocopier was turned off and the Aethalometer continued to measure for 24 hours thereafter. The concentration of BC aerosol produced by the photocopier occasionally raised room levels to the 1-$\mu g/m^3$ level. This is equivalent to BC levels observed in urban areas under moderate vehicle traffic (Schnell et al., 1992). The concentration of finely dispersed, charged BC aerosol is reduced upon cessation of photocopying. In the room (under no-air-ventilation conditions), BC concentrations fell to background levels within 30 to 60 minutes.

Hannsen and Andersen (1986) measured the particulate content in the exhaust air of five different photocopiers. The particulate concentrations observed were in the range of 90-460 $\mu g/m^3$ which is comparable to average concentrations (50-500 $\mu g/m^3$) found in offices in Denmark. Eggert et al, (1990) measured emissions of particulates from 20 different laser printers and found the average emission rate to be 61 μg/min.

The potential for particulate indoor air emissions is expected to increase over time between maintenance cycles. Typically, about 75 percent of the toner is transferred to the photoconductive drum. Toner particles that do not adhere to the drum become available for emission to the indoor air. As the photoconductive surface of the drum deteriorates, the toner transfer efficiency decreases. Although this decrease in efficiency increases the potential for indoor air emissions, there are no specific data on the extent to which these unbound toner particles contribute to overall particulate emissions. The size of individual particles influences the degree to which they can be inhaled and the types of effects they can cause. There are no specific data on the size of emitted particles from dry-process photoimaging machines.

2.2.5.3 Volatile Organic Compounds (VOCs). Toners typically have organic components that are likely to be emitted into the indoor air during operation and from copied or printed paper. Wolkoff et al. (1993) have conducted one of the most comprehensive studies on emissions from finished products of selected office equipment. The study used both headspace analysis and chamber studies to quantify emissions from printed or copied paper from office copiers and printers. Emissions were assessed from toners and from printed papers from six different photocopying machines (A-F), three laser printers (G-I), and two matrix printers (J and K). Emissions were first evaluated for toner powders to identify individual constituents of VOCs emitted. The toner powder was qualitatively evaluated by packing a glass column with toner powder, cold-trapping desorbed volatiles, and analyzing using flash desorption and gas chromatography/mass spectrometry (GC/MS). VOCs from processed paper, represented by black sheets (photocopying a dark red notebook or printing a black field), were determined using headspace analysis and a modified chamber study. (Black sheets represent 100 percent coverage which yields a maximum emission scenario. Coverage for average text is around 15 percent.) The headspace analysis was semiquantitative. Ten

black sheets were crumpled into balls, placed into nylon foil bags, and allowed to equilibrate overnight at ambient temperature. Samples of the air inside the bags were collected and analyzed using flame ionization detection (FID). In the small modified chamber study a piece of processed paper of defined size was placed in the chamber, which was flushed continuously with nitrogen at 50 percent relative humidity (RH) at 0.030 L/min. The chamber study was used to establish VOC emission rates.

Results from Wolkoff et al. (1993) indicate that the VOCs present in toner powders include solvent residues (e.g., benzene, toluene, xylene), monomers (styrene and acrylate esters), monomer impurities (ethyl, propyl, and isopropyl benzenes, and diphenyl butane isomers), coalescent agents (Texanol), monomer or polymer oxidation products (e.g., benzaldehyde), and polymer toner additive decomposition products. The more volatile components from toner powders dominate the emissions from paper. Xylenes and styrene were dominant in samples from processed paper from all machines tested, and acrylates were found to be minor components. Table 4 summarizes the major TVOCs emitted from processed paper. Table 5 summarizes the TVOC emission rates from fresh copies from all machines evaluated. In general, emissions rates for matrix printers were lowest (0.7 to 1.0 μg/sheet), emissions rates from laser printed paper ranged from 2.0 to 6.5 μg/sheet, while there was wide variation in the emission rates from photocopied paper (0.5 to 16.4 μg/sheet). The authors calculated a realistic estimate (assuming first-order decay) of styrene concentrations, one of the major constituents identified in processed paper emissions, that could result from handling 200 freshly processed copies in a 17-m^3 office with 0.25 air change per hour (ACH) (which is considered relatively low) and an emission rate of 6 $\mu g/m^2/h$ to be 12 $\mu g/m^3$.

Indoor air emissions from dry-process photocopiers can also be expected to occur as a result of offgassing from basic construction materials such as plastics and electrical components and failure (or burining) of components. Emissions from electronic components are discussed in Section 7.3.

2.3 Wet-Process Photoimaging Machines

Wet-process photoimaging refers to machines that use liquid toners. Other than the physical characteristics of the toners (wet vs. dry), there is little difference between the core technology of wet- and dry-process photoimaging. Each uses a photosensitive drum and electrostatically transfers the toner to the paper as discussed in Section 2.1.

2.3.1 Wet-Process Photocopiers

Wet-process photocopiers were very popular in the 1970s and early 1980s. The main advantages of these copiers were that they were generally cheaper to operate and required less maintenance than dry-process machines. However, early types of wet-process photocopiers

Table 4. VOC Emitted from Copied Paper (listed according to GC retention time)

	Photocopied						Laser Printed			Matrix Printed	
	A[a]	B	C	D	E	F	G	H	I	J	K
Benzene	x	x+	x+	x+	*+	*+	x	x+	x	x	x
1-Butanol	x+	x+		x	x+	x+	x+	x	x+		x
Toluene	x+	*+	x+	*+	x+		*+	x+	x+	*	x
Pyridine						x+					
1-Methyl-2-pentanone		x+		x+							
Hexanal	*	x	x	x	x	x	x	x	x	*	*
C_4-Cyclohexane isomers			+	x+			+		+		
1-Butyl-ether		x+		+	x	+	x+	x+	x+	x	x
Ethyl benzene	*+	*+	*+	*+	*+	*+	*+	*+	*+	x	*
m- and p-Xylene	*+	x+	*+	*+	*+	*+	*+	*+	*+	x	*
o-Xylene	x+	x+	*+	x+	x+	x+	x+	x+	*+	x	x
Styrene	*+	*+	*+	*+	*+	*+	*+	*+	*+	*	*
1-Butyl acrylate		x+			*+		x+				
2-Phenylpropane	x	x+	x	x+	x+	x+	x+	x+	x+	x	x
3-Heptanol		x+									
1-Phenylpropane	x	x+	x+	x+	x+	x+	x+	x+	x+	x	x
Ethyl toluene isomers	x	x+	x+	x+	x+	x	x+	x+	x+	x	
3-Ethyoxy-3-ethyl-4,4-dimethylpentane		*+								*	
1-Butyl methacrylate	x+						+				
Benzaldehyde	+			x+	x+	x+		x+	x+	x	x
Diethylbenzene isomers			x	x			x+	*+	x		x
2-Ethyl-1-hexanol				x+	+		+	x+	x+		x
2-Ethylhexylacetate			+	+				x+	+		
2,2-Azo-bis-isobutyronitrile	+	x+		x+					x+		
2-Ethylhexyl acrylate			x+	x+				x+	x+	x	x

[a] Hexane, 1,1-dichloro-1-nitroethane, octene, pentanal, and trichloroethene were all observed in paper emissions.
Note: x = detected in processed paper emissions, * = four largest peaks, + = detected in toner powder.
Source: Wolkoff et al., 1993.

Table 5. TVOC Emissions from Fresh Copies (μg/copy sheet)[a]

Photocopying Machines		Laser Printers		Matrix Printers	
A	1.6	G	6.5	I	0.7
B	16.4	H	2.6	K	1.0
C	0.5	I	2.0		
D	2.4				
E	6.1				
F	7.5				

[a] Emitted from fresh black copies during 16 hours.

Source: Wolkoff et al., 1993.

produced poorer image density and copy quality. Dry-process machines use heat and pressure to fix the image, forcing the toner into the paper fibers to yield a uniform image. By contrast, early types of wet-process machines utilized a heat fusing process to drive off the isoparaffinic solvents used in the toners. As a result, the toner was left on the surface of the paper; if the paper used had a rough surface or heavy lint content, the image density would not be uniform. As a result, these machines experienced a reduced market share; currently only one company (Savin) distributes these machines in the United States. However, recent advances in the machines, such as reformulation of liquid toners and the introduction of heat-pressure fixing, have improved copy quality so that it approaches that of dry-process machines.

2.3.2 Wet-Process Printers

Ink-jet and bubble jet printers, the two main types of wet-process printers, are low-cost alternatives to more expensive laser printers. The image quality does approach that of laser printers; however, they are slower, which limits their throughput and applications. Sales figures for wet-process printers specifically are not available. However, they are included in the category of non-impact printers (along with laser printers) of which about 1.77 million units were sold in 1991 (U.S. Department of Commerce, 1991). The annual growth rate for printers is projected at 7 percent for the years 1993-2004 (CBEMA, 1994).

As stated in Section 2.1, wet-process printers differ somewhat in how the toner is delivered in that a photoconductive drum is not necessary. In ink-jet printers, the toner is "sprayed" toward the paper; in bubble jet printers, a bubble of toner is formed and then "bursts" toward the paper. This process is carried out line by line rather than by creating a photoprocessed image of the whole page. As a result, they are much slower than the true photoimaging process, which can produce the image an entire page at a time.

2.3.3 Supplies Used

In general, toner is a consumable supply that may be associated with indoor air emissions. Liquid toners consist primarily of pigments and a liquid solvent carrier. The pigment used will affect the type of solvent or liquid carrier needed. Some pigments may require the use of hydrocarbon solvents. Isoparaffinic petroleum solvents (C_8-C_{12}) are commonly used. Other pigments may be water-soluble and use alternative carriers including such components as water, glycerin, and alcohols.

Products or supplies may be used in cleaning or maintenance of the machines. Section 2.2.4 describes the supplies commonly used during cleaning and maintenance of dry-process machines which may also be used for wet-process machines.

2.3.4 Indoor Air Emissions Data -- Wet Process Photoimaging Machines

Wet-process photocopying (also known as liquid-process photocopying) requires the use of toners, dispersants, and developers that are nearly pure aliphatic hydrocarbon petroleum distillate solvents with some trace compounds. Often the solvents are principally composed of isodecane ($C_{10}H_{22}$). Other VOCs detected in wet-process photocopier emissions include xylene, 2,2,4-trimethyl octane, branched alkanes (C_{10}-C_{11}), nitropyrene, phthalates, and isocyanates (Etkin, 1992).

Greenfield (1987) estimated emissions from wet-process photocopiers using a mass balance approach. A small amount of solvent is released each time a copy is made. With average use of about 16 copies every 5 minutes (1,500 copies per day), each copier uses about 1 qt (1,000 g) of combined fluid per week. Assuming that all solvent is released to indoor air, this yields a hypothetical emission rate of 25 g of TVOCs per machine per hour. With a ventilation rate of about 1 ACH, emissions will be removed by the ventilation system by the end of the day according to most experts.

Kerr and Sauer (1990) monitored the emissions of one wet-process photocopier and found that approximately 0.241 g (0.322 mL) of solvent was released with each copy made. At lower ventilation rates (as low as 0.2 ACH in some energy-efficient buildings), VOC emissions can continue to accumulate during the day and reach a peak of 35 mg/m^3 according to some studies (Etkin, 1992). At low ventilation rates, there is also generally not enough time overnight to exhaust the emissions accumulated during the previous workday. By the end of the work week, the indoor air TVOC concentration can be considerably elevated.

In some cases, the VOCs emitted by wet-process photocopiers can make up a major or even the largest proportion of the TVOCs in indoor air. Hodgson and Daisey (1989) studied a newly constructed Federal office building in Portland, Oregon, and identified 26 wet-process photocopiers and three plotters as primary sources of VOCs in the buildings. Other potential sources of VOC identified by a walkthrough survey included building interior finish materials

(e.g., carpet tile, carpet spray adhesive, vinyl-base molding and adhesive, and rubber floor tile and adhesive), furnishings, and office products. The copiers and plotters used a mixture of C_{10}-C_{11} isoparaffinic hydrocarbons as a clear dispersant and in their toner premixes. An inventory of supplies indicated that 147 L of copier dispersant and toner premix were used in the building over one period of about 55 working days, suggesting an average solvent usage for copiers alone of approximately 2.7 L/day or 2 kg/day. Air samples were taken within the building to measure the concentration of hydrocarbons. The samples clearly showed that the dominant VOCs were the C_{10}-C_{11} mixture, and the similarity in source strengths suggests fairly uniform use of copiers and plotters over the course of the study. The range of source strengths observed were 2.6 to 4.6 kg/day, which is consistent with the estimated solvent usage rate for the copiers alone of about 2 kg/day. Samples of new, unused interior finish materials (carpet, tile, carpet spray adhesive, and rubber floor tile) were obtained from the building at the end of the construction period. The emissions of VOCs from these materials were qualitatively determined using small-volume chambers. The dominant compounds emitted by these materials were not major constituents of the indoor air samples. Consequently, the contributions of these sources to concentrations of VOCs in the building appeared to be minor relative to wet-process office machines (Hodgson and Daisey, 1989).

Canadian researchers (Tsuchiya et al., 1988) also found that emissions from wet-process photocopiers were a major source of TVOCs in three buildings. The research team also found that copier exhaust emissions were adsorbed by newspapers, books, and upholstery, which could then act as secondary sources even after the photocopiers were no longer in use. The measured TVOC concentrations were 107,000 mg/m^3 in the copier fluid used in these buildings, about 4,150 mg/m^3 in the copier exhaust, and as high as 64 mg/m^3 in the ambient air in one office area.

2.4 Health Concerns

Controlled human exposures (Wolkoff et al., 1992) and evaluations of problem buildings (e.g., NIOSH, 1991) have indicated that photocopiers are associated with self-reported adverse health effects. Schnell et al. (1992) reported that people experienced rashes and allergic reactions from suspected exposure to aerosolized BC photocopy toner. Thirty volunteers exposed (for six hours) in groups of five to pollutants emitted during typical clerical work in a simulated office environment with three personal computers, a photocopier, and a laser printer reported significant ($p<0.004$) increased perception of headache; mucous irritation and dryness in the eyes, nose and throat; and dry and tight facial skin (Wolkoff et al., 1992).

The Madison Building, Library of Congress Study (NIOSH, 1991) was one of the largest, most comprehensive studies investigating reported cases of Sick Building Syndrome

(SBS)[1] in a problem building. This study included extensive monitoring of environmental pollutants and environmental conditions and a survey of building residents to document reported health symptoms and personal exposure factors. The evaluation could not identify consistent relationships between health symptoms and measured environmental contaminants, including VOCs, respirable particulate, and bioaerosols. However, the study did find an association between symptoms and perceived comfort; specifically that some workstation factors (e.g., location and use of copiers or printers, glues, and adhesives) are associated with a variety of self-reported health complaints. These workstation factors may represent potential sources of pollutants or irritants, which may not result in significant indoor concentrations throughout a building or large room but still appear to elicit a response either because of peak localized exposures, because these chemicals are capable of eliciting a response below existing recognized thresholds, or because they may contribute to other factors such as personal stress and ergonomics in eliciting a response.

The most prominent workstation factor identified in the NIOSH study was the use of a photocopier, which was significantly associated with 8 of the 14 symptom complexes analyzed. Odds ratios for these ranged from 1.5 to 2.5, which means that individuals complaining of symptoms were 1.5 to 2.5 times as likely to have been exposed to photocopiers as those without complaints. The symptoms of concern in the study included headache, fatigue, mucous membrane irritation (all included in SBS symptoms), as well as flu-like and respiratory symptoms, tension, and nervousness. Although copiers are known sources of VOCs that have been shown to have similar effects, it is also possible that factors such as intense light exposure, noise, and posture may influence the development of some of these symptoms. Photocopying has also been shown to be weakly associated with corneal epithelium damage (indicative of severe eye irritation) measured using a vital stain (Kjaergaard and Brandt, 1993).

Gallardo et al., (1994) reported a case in which a 44-year old woman who had worked in a photocopy shop containing dry-process photocopies for six years developed a chronic lung disorder called siderosilicosis. This disease is characterized by fiberlike growths in the lung, headaches, cough, and shortness of breath, and has previously been associated with miners and foundry workers exposed to dusts containing ferric oxide and iron dust which also contains silicon. Analysis of the toner dust found in the workplace and a lung tissue sample confirmed that the condition was due to exposure to photocopier toner dust. It should be noted that air sampling was not conducted as part of this study. Therefore, it can not be determined whether exposure resulted from operation of the photocopier, from maintenance of machines, mishandling of toner powders (e.g. spillage), or other reasons.

---

[1] The World Health Organization (1983) describes SBS symptoms to include (1) eye, nose, and throat irritation, (2) sensation of dry mucous membranes, (3) erythema (skin irritation, redness), (4) mental fatigue and headaches, (5) high frequency of airway infections and cough, (6) hoarseness and wheezing, (7) itching and unspecific hypersensitivity, and (8) nausea and dizziness.

Each of the individual pollutants associated with office equipment has the potential to cause adverse effects if exposures are sufficiently high or if people exposed are sensitive. Table 6 briefly summarizes some of the health concerns and standards for the major pollutants associated with office equipment. In addition to TVOCs, individual VOCs may also present potential concern. However, because of the large number of compounds, they are not described in detail here. Studies on the isoparaffinic solvents typically used in wet-process photocopiers have shown them to be relatively nontoxic (Mullin et al., 1990).

2.5 Pollution Prevention Opportunities

Pollution prevention for office equipment can be applied to machine design, raw materials used, or supplies. Pollution prevention opportunities developed for most photoimaging processes could also be applied to other processes (photocopiers, laser printers, or fax machines) given their similarities in design and operation. Pollution prevention alternatives specific to toner would apply only to the respective wet or dry process machines.

This research project will include a testing program to quantitatively define the emission profiles for selected office equipment to support the identification and evaluation of pollution prevention opportunities. These emission profiles will focus on individual constituents emitted from the equipment.

This research will evaluate the emissions from entire machines rather than just the outlet exhaust air, which has been the focus in some past research. As a result, this study will define the manner in which pollutants are emitted from the machines. If there are multiple emissions points within the machine, sealing selected points will serve to reduce emissions. If emissions can be limited to the exhaust air, the use of a single filter could reduce emissions to the indoor air. Although this is not pollution prevention, it would facilitate the development of a low-impact machine.

Major constituents emitted will be characterized based on either the total quantity emitted or its relative toxicity. Knowledge of the emissions behavior of individual pollutants will provide RTI, EPA, and equipment manufacturers with the information necessary to investigate the root cause of emissions. Identifying specific constituents of concern can direct efforts to reformulate the source material (e.g., toner, photoconductive surface) or make alterations in the process that will reduce the emission potential.

Ozone is one of the major pollutants generated in dry-process photoimaging. As described in Section 2.1, Canon has applied pollution prevention by modifying its printers and photocopiers to reduce ozone emissions through the development of the charged roller system. In conventional designs, electrically charged corona wires are used to add a uniform primary charge across the surface of the photosensitive drum and the paper surface. The corona wires are separated from the drum by a small distance and, therefore, high voltages are applied to the corona wires to attain the needed charge. Electrical arcing results from the corona wire, which produces ozone. In Canon's design, the two corona wires are replaced with "charging" rollers. Unlike the corona wires, the charging rollers are in direct contact with the

Table 6. Health Concerns for Major Indoor Pollutants Related to Equipment.

	Pollutant		
	Ozone	Particulates	TVOC
Reported health effects	Respiratory tract irritant, cough and chest tightness, reductions in lung function during exercise.	Worsen symptoms of preexisting respiratory problems with no lower threshold	Between 0.2 and 3.0 mg/m^3, contributes to the appearance of sick building syndrome (SBS) complaints and is likely to depend on the existence of other factors, or above 3 mg/m^3 alone.
Occupational Standard:		10 mg/m^3	None
ACGIH TLV[a]	0.2 mg/m^3 ceiling (not to be exceeded)[b]	3.5 mg/m^3 black carbon particles (8hr TWA) 10 mg/m^3 particulates not otherwise classified (8hr TWA)	None
OSHA PEL[a]	0.2 mg/m^3 (8hr TWA) 0.6 mg/m^3 (15 minute average)	15 mg/m^3 (total) (8hr TWA) 5 mg/m^3 (respirable fraction)	None
NAAQS (National Ambient Air Quality Standard)[c]	0.24 mg/m^3 hourly	75 $\mu g/m^3$ respirable particulates	None
Indoor Air Quality Guideline	0.15-0.2 mg/m^3 (1 hour)[d] 0.1-0.12 mg/m^3 (8 hours)[d]	$\leq$ 100 $\mu g/m^3$ (short-term)[e] $\leq$ 40 $\mu g/m^3$ (long-term)[e]	2 mg/m^3 [f]

[a]American Conference of Governmental Industrial Hygienists Threshold Limit Value and the Occupational Safety and Health Administration's Permissible Exposure Limit.
[b]ACGIH has issues a notice of intended changes for the ozone standard and recommends an 8hr time weighted average of 0.1 mg/m^3 and a STEL (15 minute average) of 0.4 mg/m^3.
[c]The Environmental Protection Agency is presently re-evaluating the NAAQS for both ozone and particulates and may revise them in the near future.
[d]Residential indoor air quality guidelines from Health and Welfare Canada (1987), Exposure Guidelines for Residential Indoor Air Quality, Department of National Health and Welfare, Ottawa.
[e]World Health Organization (1987) Air Quality Guidelines for Europe, WHO Regional Publ., European Series No. 23, Copenhagen.
[f]Tucker, 1990.

photosensitive drum, which eliminates the need for high voltage and prevents the formation of electrical arcs and ozone. This new design has resulted in lowering ozone emissions to below detectable levels (J. Palmeri, Canon, personal communication, March 9, 1994). Given the same technology, the charging rollers are now being used in laser printers as well. Canon, Inc., manufactures a majority of the printer engines in the United States. Therefore, the charging rollers are being used in several types of machines and by multiple manufacturers.

Improving transfer efficiency minimizes the amount of toner particles available for emission into the indoor air. Canon has addressed this by improved toner transfer efficiency through the use of a replaceable cartridge system in photocopiers similar to the approach used in printers. The cartridge system houses the toner as well as the photosensitive drum and other consumables. As the photoconductive surface of the drum deteriorates, the toner transfer efficiency decreases increasing the potential for indoor air emissions. The photosensitive drum is automatically replaced at regular intervals (whenever the toner is changed), thereby restoring the transfer efficiency to its original state and reversing the trend of increasing potential for particulate pollution. Printers in which the photoconductive drum are not replaced as part of regular maintenance will suffer a gradual decrease in toner transfer efficiency as the drum ages, leaving more toner particles within the printer chassis or in the indoor air. Again, because Canon produces the majority of the engines used in laser printers in the U.S., the use of this technology would help minimize emissions from the majority of printers.

The fusing process may also provide some opportunity for pollution prevention. At present, heat and pressure are used in combination to fuse the image to the paper. Elevated temperatures used in fusing can be expected to increase the volatilization of VOCs present in the toner. Reducing fuser temperature (by changes in pressure or toner formulation) may result in lower VOC emissions.

Changes in toner particle size may have an impact on toner transfer efficiency, the fusing process, and overall emissions. The size of the particles emitted also influence the degree to which they are inhaled and the potential adverse effects. Therefore, pollution prevention evaluations could consider the impact of particle size on reducing emissions to the indoor air.

The toners (and developers, where applicable) used in wet-process systems are the major source of indoor air emissions for these machines. These emissions occur from the volatilization and/or aerosolization of toner and toner solvents. Reformulation of toners using lower-volatility solvents can result in lower emissions. However, changing solvents may impact the quality of the printed images and may lead to mechanical problems such as clogging of the ink or bubble jets. The pollution prevention research taking place within the printing and publication industry should also be considered for other toner options. For example, water-based toners and ultraviolet (UV)-cured solid toners used in the printing industry may also prove useful in printers and photocopiers.

The emissions from both dry- and wet-process color photoimaging are not well characterized and should be evaluated further as a first step in developing pollution prevention options. This should include an investigation to determine the relative toxicity of color toners with respect to the traditional black toners and the potential need for reformulation. Color image processing requires the use of lower fuser temperatures, requires multiple passes within the machine, and uses characteristically different toners. Each of these requirements may have implications on indoor air emissions and subsequent pollution prevention strategies. The lower the fuser temperature the lower the rate of emissions of volatile organics. However, the need for multiple passes increases the time that the image may be subjected to heat and therefore may increase emissions. Therefore, an investigation of the balance between the fuser temperature and time in contact with the fuser rollers is needed.

Pollution prevention may also be achieved through modified equipment maintenance procedures. Organic solvent-based products are typically used to clean glass, mirrors, and rollers; the use of water-based products should be investigated. Reformulation of solvent for cleaning glass and mirrors may be easily accomplished but may be more difficult for other cleaning products that not only clean but also replenish the rubber parts (rollers) within the machine. In addition, because emissions have been shown to increase with time between routine maintenance operations (Selway et al., 1980), reduced indoor air emissions can be expected from proper and timely equipment maintenance. Furthermore, the development of maintenance-free machines or the development of improved or simplified maintenance practices would likely result in lower emissions.

Although not specifically pollution prevention with respect to indoor air emissions, several manufacturers have initiated recycling for consumable materials, including toner cartridges and photoconductive drums. The laser printer toner cartridge is the most common element recycled, both by the original manufacturer and by small businesses dedicated to that purpose, although cartridges from photocopiers, fax machines, and inkjets are also remanufactured. The performance of a recycled toner cartridge can vary based on the condition of the cartridge and the process used to remanufacture it (U.S. EPA, 1994). The first remanufacturers utilized a "drill and fill" process which merely replenished the supply of toner. Quality problems were attributed to these because the toner debris cavity was not emptied each time. Currently, most remanufacturers utilize a practice that includes disassembling, cleaning, refilling, and reassembling of the cartridge, ensuring a higher quality products.

Although there are no Federal performance guidelines, the General Services Administration has set forth procedures for remanufacturing toner cartridges and the States of Wisconsin, Connecticut, and Mississippi have established performance standards for remanufactured toner cartridges. Furthermore, private organizations such as Buyer's Laboratory, Inc. (BLI) provides custom testing for toner cartridges including onsite inspection of remanufacturing process and testing of the remanufactured cartridges. The International Cartridge Remanufacturing Association (ICRA) also sets standards for its member companies and encourages all companies to abide by these standards.

3.0 SPIRIT DUPLICATORS

Spirit duplicators use methyl alcohol (methanol)-based fluids to produce the familiar purple copies used in many schools. Hospitals and churches also commonly use spirit duplicators (M. Murphy, Gray & Creech, personal communication, February 8, 1994). These machines are relatively inexpensive and offer a simple method for duplicating. Recent concern over the flammable and toxic nature of the methanol-based fluids has prompted many school boards and State and local governments to mandate external ventilation and fire safety in storage of these products. Figure 4 is a schematic diagram of a typical spirit duplicator. Sales of spirit duplicators by U.S. manufacturers declined from 82,491 in 1974 to 9,194 in 1990 (U.S. Department of Commerce, 1975, 1990). A primary reason for the decreased demand for these units is that photocopiers are much more convenient to use (R. Malpass, Gray & Creech, personal communication, July 12, 1994). Photocopying does not require the preparation of stencils as does a spirit duplicator. The A.B. Dick Company stopped manufacturing spirit duplicators in January 1994, although parts will be manufactured until the year 2001 (R. Malpass, Gray & Creech, personal communication, July 12, 1994).

3.1 Equipment Design and Operation

The spirit duplication process involves creating a master copy on a stencil, which has a reverse image printed on it in an alcohol-soluble dye. The user places the master on the drum of the duplicator. The paper to be printed is fed under, and kept in contact with an alcohol-saturated wick, which applies a thin layer of alcohol to the paper. As the paper comes in contact with the master copy, the alcohol dissolves a small portion of the dye and transfers the image to the finished sheet.

3.2 Supplies Used

The main supply used in spirit duplicators is methyl alcohol, which makes up from 30 to 95 percent of duplicating fluids. Starkey Chemical Process Company manufactures a duplicating fluid with a reduced amount of methyl alcohol. Starkey Company supplies four formulations: Type 1 (24-2070), Type II (24-2060), Regular (24-2030), and Spirit-Safe. Starkey's regular duplicator fluid will produce brighter copies than Types I and II, and the color intensity will last longer (J. Bergener, personal communication, Starkey Chemical Process Company, April 4, 1994). Repeat-O-Type Manufacturing Company supplies two formulations: Duplisafe and Spirit Duplicating Fluid. The major components of each formulation are presented in Table 7.

A 1991 University of North Carolina at Chapel Hill study evaluated the use of spirit duplicators in North Carolina schools. This study concluded that potentially dangerous methanol exposures were occurring in some of the schools (Susie, 1991). In the sampled

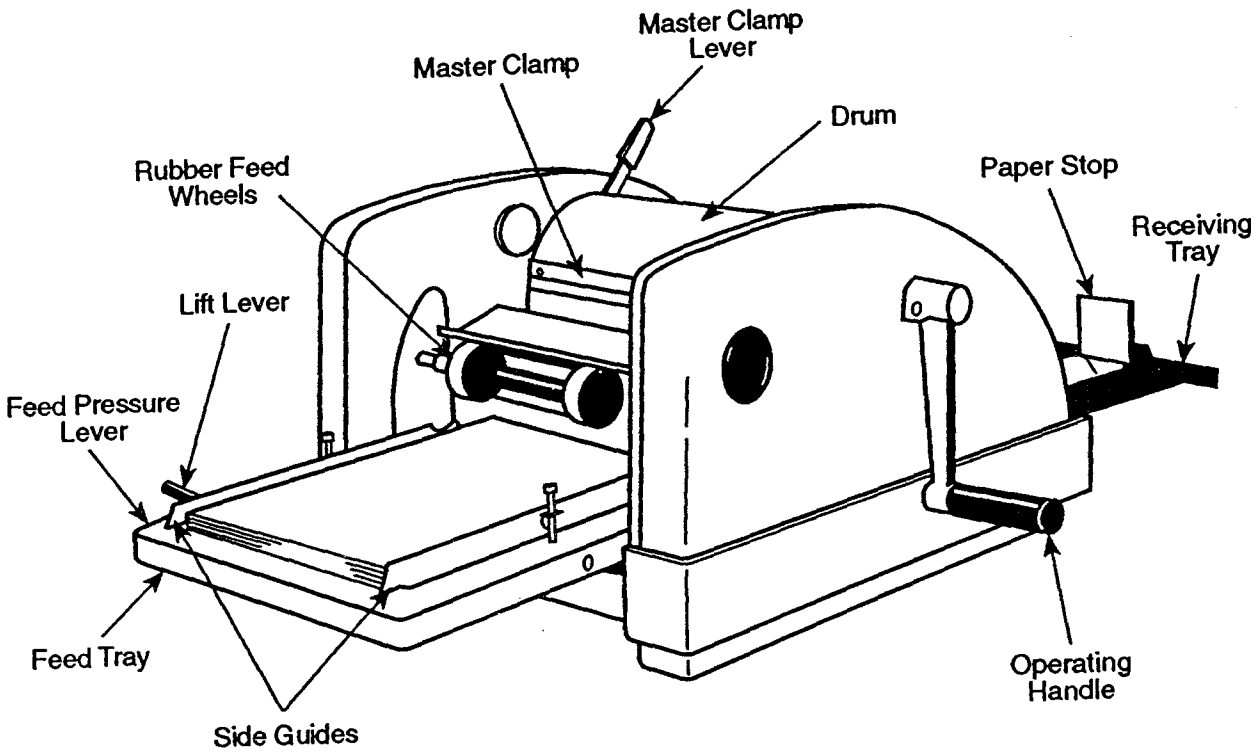

Source: Starkey Chemical Company

Figure 4. Spirit duplicator.

Table 7. Duplicating Fluid Formulations

Duplicating Chemical	Compounds	Health Concerns
Type I (24-2070) (Manufacturer: Starkey Chemical Company)	95% Specially denatured alcohol[a] and 5% propylene glycol-monomethyl ether (DPM)	Effects of overexposure include dizziness, visual impairment, nausea, and respiratory failure.
Type II (24-2060) (Manufacturer: Starkey Chemical Company)	35% to 55% specially denatured alcohol,[b] 40% to 60% methyl or isopropyl alcohol, 5% DPM	Slight irritant to the mucous membranes. Skin may become dry and cracked.
Regular (24-2030) (Manufacturer: Starkey Chemical Company)	95% Methyl alcohol (methanol) and 5% deionized or distilled water	Effects of overexposure include dizziness, visual impairment, nausea, and respiratory failure.
Spirit Safe (Manufacturer: Starkey Chemical Company)	Propylene glycol	No evidence of adverse effects from exposure
Spirit Duplicating Fluid (Manufacturer: Repeat-O-Type)	99.85% Methyl alcohol	Effects of overexposure include dizziness, visual impairment, nausea, and respiratory failure.
Duplisafe Duplicating Fluid 2001 (Manufacturer: Repeat-O-Type)	Propylene glycol	No harmful effects expected.

[a] Five gallons of commercially pure methyl alcohol are added to every 100 gallons of ethyl alcohol. The purpose of Type I is to reduce toxicity. This mixture was originally formulated so that spirit duplicators could be used aboard U.S. Navy ships, which typically have confined spaces and poor ventilation.

[b] Five gallons of commercially pure methyl alcohol are added to every 100 gallons of ethyl alcohol. Type II fluid produces brighter color than Type I fluid but must be used with adequate ventilation. Toxicity is only reduced, not eliminated, with Type II when compared with the use of 95% methanol.

Source: Material Safety Data Sheets, Starkey Chemical Company and Repeat-O-Type, 1994.

school system (Durham County), 900 gallons of duplicator fluid was expected to be used in 1991. This represents approximately half the quantity purchased by the same school system in 1981. Therefore, in this school system, it can be inferred that usage of spirit duplicators has decreased proportionally.

For illustrative purposes Table 8 compares the costs of using a typical spirit duplicator and a photocopier. These costs are based on a North Carolina school contract for a photocopier with the capability of reproducing 8.5 in. x 11 in. and 8.5 in. x 14 in. copies, with a volume of 100 to 5,000 copies per month (or up to 60,000 copies per year) at a maximum rate of 12 copies per minute, and for an A.B. Dick 217G model spirit duplicator.

Table 8. Cost Comparison of One Photocopier Model and One Spirit Duplicator Model

	Photocopier	**Spirit Duplicator**
Equipment	$1,125 for Mita DC-1205 [a]	$975 for the A.B. Dick 217G model[a]
Supplies	$217/60,000 copies or approximately $0.004/ single copy (for toner and developer)	$63/60,000 copies or approximately $0.001/ single copy (for duplicator fluid & masters)
Service	$240/year for 60,000 copies, excess copies $0.008 each	$214/year, unlimited copies
TOTAL operating costs - Based on 60,000 copies/year excluding equipment cost	$457 (or approximately $0.008/ single copy)	$277 (or approximately $0.005/ single copy)
Based on 120,000 copies/year excluding equipment cost	$1154 (or approximately $0.01/ single copy)	$340 (or approximately $0.003/ single copy)

[a] Source: Gray & Creech, 1994.

3.3 Indoor Air Emissions Data -- Spirit Duplicators

Spirit duplicators print 60 to 120 pages per minute (M. Murphy, personal communication, Gray & Creech, July 12, 1994). (One liter of methanol prints, about 1,050 to 1,250 copies) with 6 percent coverage each as is typical for this type of machine (N. Greeson, personal communication, Gray & Creech, July 26, 1994). Using 4,500 as an average number of pages printed per gallon of methanol, it can be estimated that 0.03 oz (8.5 mg) of methanol is used to print each page. Because methanol is very volatile, it can be assumed that the amount used is equal to the amount emitted.

Susie (1991) conducted a literature search on emissions from, and health effects associated with, spirit duplicators. She summarized an investigation done in 1948 by the

Connecticut State Department of Health of three plants using spirit duplicators. Plant 1 used 1 gallon of duplicator fluid per day. In Plant 1 the methanol air concentration was found to be 286 to 430 ppm. Plant 2 used 1/2 gallon of duplicating fluid each week, and the indoor air concentration of methanol was 40 to 50 ppm. Plants 1 and 2 used duplication fluid containing 50 percent methanol. Plant 3 used 10 gallons of duplication fluid each week, and the methanol concentrations were 510 to 635 ppm. Plant 3 used duplication fluid containing 75 percent methanol. Susie (1991) also summarized another study performed by McAllister in 1954. In this study, samples taken during runs of 300 to 500 copies in a small test room resulted in breathing zone concentrations of methanol between 400 and 800 ppm. The duplicating fluid contained 70 percent methanol. In this study, room methanol concentrations peaked at 1,000 ppm. McAllister also measured methanol concentrations in a large office area where three or four duplicators were running simultaneously. In this evaluation, breathing zone concentrations of methanol measured 155 to 420 ppm. The duplicating fluid was 65 percent methanol.

Frederick et al. (1984) describe the results of a NIOSH Health Hazard Evaluation conducted in a Washington School district. The duplicating fluid contained 99 percent methanol. Breathing zone methanol concentrations were taken as teacher aides operated spirit duplicators and collated and stapled duplicated papers. Measurements were made on 21 duplicators in 12 schools. The sampling strategy included a cross section of small and large rooms, rooms with windows that could be opened and those with nonoperable windows, rooms with no windows, and rooms that had either none or some exhaust ventilation. Airborne methanol concentrations ranged from 365 to 3,080 ppm during use of unventilated duplicators. Breathing zone concentrations taken in unenclosed ventilated areas were 80 to 1,340 ppm. After simple enclosures were fabricated for the existing ventilation systems, the methanol concentrations decreased to 9 to 130 ppm. Tables 9 and 10 list the methanol concentrations in operator breathing zones during equipment operation and collating.

3.4 Health Concerns

Methanol is very volatile, with a rate of evaporation of 610 (n-butyl acetate = 100). The OSHA designates the permissible exposure limit (PEL) for methanol to be an 8-hour, time-weighted average of 200 ppm, with a 15-min short-term exposure limit (STEL) of 250 ppm. Specific health concerns associated with duplicator fluid formulations are listed in Table 7. Operator exposure can occur through inhalation of evaporated methanol, through skin absorption during handling of freshly duplicated paper, or through other skin contact with methanol (handling of fluid containers, cleaning and maintenance, etc.). Signs and symptoms of mild to moderate methyl alcohol toxicity include headaches, dizziness, nausea, temporary blurring of vision, and behavioral disturbances. Severe exposure can result in metabolic acidosis (reduced alkalinity of the blood and of the body tissues), cyanosis (a bluish or purplish discoloration due to deficient oxygenation), blindness, coma, and death.

Table 9. Methyl Alcohol Air Concentrations in Spirit Duplicator Operator's Breathing Zone (ppm)[a]

No Exhaust Ventilation	Existing Ventilation	Existing Ventilation plus Enclosure
1,100	120	
1,180	135	15
365	80	9
1,365		
195		
1,000		
435		
1,275		
575	480	
1,250	650	130
	120	35
	265	
1,040	375	
500		
940		
3,080	430	
1,185	680	
1,270	410	15
410		
970		
1,290		
1,440	1,340	90
685		

[a] Concentrations listed represent 15-min sampling periods. Room temperatures were not measured but were within the normal comfort range.

Note: Evaluation Criteria for Methyl Alcohol:

1. Short-term exposure level for any 15-min period - 800 ppm (NIOSH-recommended level)
2. Eight hour time-weighted average - 200 ppm (OSHA Permissible Exposure Limit)

Source: Frederick, et al. 1984. Investigation and control of occupational hazards associated with the use of spirit duplicators. *Am. Ind. Hyg. Asso. J.* 45(1):51-55.

Table 10. Methyl Alcohol Breathing Zone Air Concentrations of Workers Collating and Stapling Papers

Time Between Duplication and Collation (h)	15-Min Average Concentration (ppm)
0-3	875
0-3	685
0-3	490
0-3	180
Approximately 24	190
Approximately 48	35

Source: Frederick, L., et al. 1984. Investigation and control of occupational hazards associated with the use of spirit duplicators. *Am. Ind. Hyg. Asso. J.* 45(1):51-55.

Susie's literature search (1991) also summarizes the first reported health effects associated with spirit duplicators. This report, published in 1955, concerned a group of clerical workers suffering from repeated headaches whose symptoms were noticed during cooler weather when the windows were closed. Area samples were taken after duplicators had operated for 60 minutes. The concentrations of methanol were 200 to 375 ppm, and the amount of methanol in the duplication fluid was unknown.

Frederick et al. (1984) describe the results of a NIOSH Health Hazard Evaluation conducted in a Washington School district. Samples were taken and questionnaires were distributed to exposed workers (teacher aides) and unexposed workers. Questionnaire responses indicated that symptoms consistent with methanol toxicity occurred twice as frequently among exposed as the unexposed. The exposed group reported significantly more blurred vision, headache, dizziness, and nausea than the comparison group.

3.5 Pollution Prevention Opportunities

A common substitute for the methanol-based duplicator fluids is propylene glycol (commercially available as Spirit-Safe or Duplisafe). Starkey Chemical Process Company advertises Spirit-Safe as a safe alternative to the methanol-based duplicator fluids (J. Burgener, personal communication, Starkey Chemical Process Company, April 4, 1994). Propylene glycol is generally nonflammable, nontoxic, and odorless. Starkey Company advertises that its mixture can be used even in poorly ventilated areas.

Substituting a less hazardous duplicating fluid would require that two adjustments be made to spirit duplicators: the wetting roller would have to be replaced and the wick would have to be replaced. The cost of replacing the wick is approximately $2, and the expense of wetting rollers varies depending on the type of duplicator. The Gray & Creech service office (Raleigh, NC) reports that a wetting roller for the A.B. Dick 217 and 212 models costs $200. The wetting roller for the A.B. Dick 215 model costs approximately $329 (M. Murphy, personal communication, Gray & Creech, April 20, 1994).

The Director of the N.C. Department of Environment, Health, and Natural Resources (NCDEHNR), Division of Epidemiology, informed the North Carolina school systems that excessive methyl alcohol exposure is likely to occur through the use of methanol-based duplicator fluids and that these exposures pose a health hazard to their employees. The three options recommended for either eliminating or reducing methanol exposure in the State's schools include (MacCormack, 1992):

- Using an alternative copying method such as photocopying,
- Substituting a nontoxic duplicating fluid for the methanol, and
- Providing sufficient ventilation in the areas and rooms where methanol fluids are used (in some schools, the duplicating machines are located in closets or small rooms that are poorly ventilated or not ventilated at all).

The preferred options (as recommended by NCDEHNR) are to eliminate spirit duplicators or to switch to a safer duplicating fluid. Elimination, or replacement, of spirit duplicators has been a common choice. If ventilation adjustments are the selected option, exposures may be reduced, but the effectiveness of that option will depend on the design and maintenance of the system. Over time, operation and maintenance of ventilation systems can become a problem. In addition, ventilation does not reduce the total amount of emissions; the emissions are merely shifted to the outdoor air.

4.0 MIMEOGRAPH MACHINES

The mimeograph, or stencil duplicator, works by forcing ink through a stencil that is usually prepared on an electron scanner. The mimeograph consists of four elements: duplicator, stencil, ink, and paper (see Figure 5).

The mimeograph is less expensive to use than a copier when running at least 75 copies per master. It is a simple process that requires little training; however, because of the manual steps, it is not as fast or convenient as photocopying.

Mimeograph machines are no longer manufactured but are still in use. They are commonly found in schools, government agencies, and churches (S. King, personal communication, Gray & Creech, February 14, 1994). In many cases, photocopiers or digital duplicators have replaced mimeographs (S. King, personal communication, Gray & Creech, February 14, 1994).

4.1 Equipment Design and Operation

The mimeograph machine requires that a stencil be prepared and placed on an ink-containing cylinder. Stencils are made of a very fine, tough, porous tissue paper that is protected by a wax-coated paper during storage. An electron scanner cuts away the coating to make openings in the stencil that allow ink to be pressed through and onto the paper (Wales, 1976). The stencil is then mounted onto the outside of the duplicator cylinder and the ink from within the cylinder is pressed onto the cylinder's surface. As the paper is fed through the machine, an impression roller presses the paper against the stencil and the printed copy is made. Black ink is the most common color of ink used for mimeograph copies; however, cyan, yellow, and red are also available. Figure 6 shows a cross section of a typed stencil.

Disadvantages of using mimeographs include: (1) the inks, which are messy, must be manually squeezed into the cylinder and the tube usually cannot be completely emptied; (2) some inks separate and leak out of the cylinder; (3) copy quality is inconsistent; (4) stencils are manually loaded, which can be messy; (5) protective covers are required to prevent the cylinder from drying out; and (6) color changing can be cumbersome.

4.2 Supplies Used

Material Safety Data Sheets (MSDS) were obtained from A. B. Dick Company, a manufacturer of mimeograph inks, to determine if the inks contained any hazardous materials. A.B. Dick Company reports that hydrotreated heavy naphthenic distillate and hydrotreated light naphthenic distillate are components in their mimeograph inks. The A.B. Dick ink and cleaning formulations are given in Table 11.

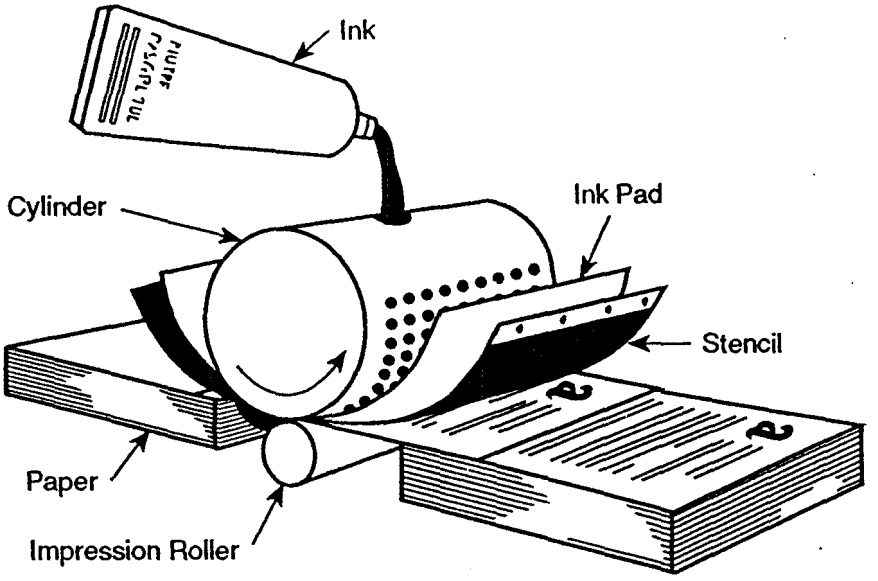

Figure 5. The mimeograph process.

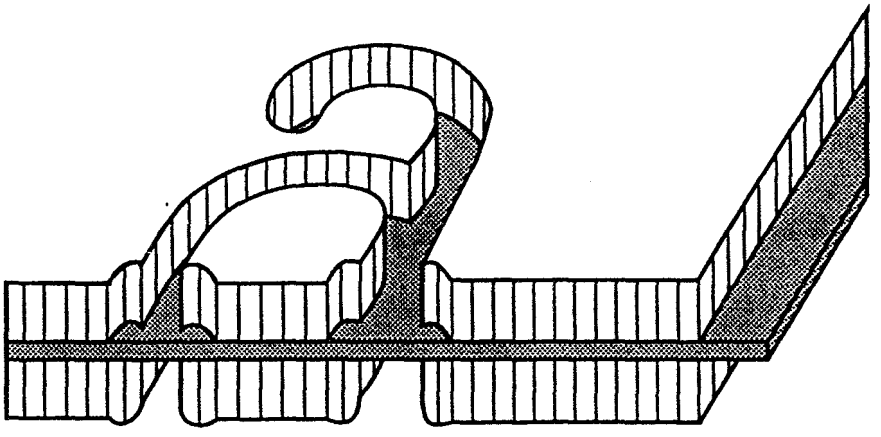

Figure 6. Cross section of typed stencil.

Table 11. Mimeograph Duplicating Fluid Formulations

Duplicating Chemical	Compounds	Percent by Weight	Health Concerns [a]
A. B. Dick Company Black Mimeograph Ink, 7100S [b]	Hydrotreated heavy naphthenic distillate Hydrotreated light naphthenic distillate	25-20 5-10	May cause skin irritation and dermatitis with prolonged contact. Slightly toxic if ingested. May cause eye irritation.
A. B. Dick Company Black Mimeograph Ink, 4-1185 Performance Fountain Concentrate [c]	Ethylene glycol Glycerol Ethylene glycol Monobutylether Isopropanol Phosphoric acid	1-2 1-2 15-20 5-10 <0.3	Overexposure may cause headache, dizziness, nausea, and drowsiness. If ingested may cause damage to kidneys, abdominal discomfort and pain, dizziness, and central nervous system depression.

[a] Health concerns are cited from Material Safety Data Sheets as indicated. These health concerns are given for the operator's protection. These concerns are not indoor air quality defined; instead, they are operator exposure dependent.
[b] Material Safety Data Sheets, A. B. Dick Company, 1994.
[c] Material Safety Data Sheets, A. B. Dick Company, 1992.

4.3 Indoor Air Emissions Data -- Mimeograph Machines

The electron scanner emits ozone during the cutting of the stencil (Wales, 1976). However, this study does not provide information on the amount of ozone emitted during cutting of the stencil. In addition, the electron scanner contains a carbon filter that reduces the ozone emissions produced during the cutting of the stencil (R. Autry, personal communication, Gray & Creech, February 14, 1994).

The mimeograph can print 60 to 120 pages per minute (M. Murphy, personal communication, Gray & Creech, July 12, 1994). One pound of paste ink (one tube) can print 3,000 pages (with 6 percent coverage each as is typical for this type of machine) (N. Greeson, personal communication, Gray & Creech, July 26, 1994); therefore, 0.005 oz (0.14 g) of ink is used to print each page. Using the information provided in Table 11, the usage of volatile compounds can be calculated per page. For example, the average percent by weight of hydrotreated heavy naphthenic (heavy naph. dist.) is 22.5, and the average percent of

hydrotreated light naphthenic distillate (lt. naph. dist.) is 7.5 in the A.B. Dick Company Black Mimeograph Ink, 7100S. Assuming that the usage of volatile compounds equals the emission of volatile compounds yields:

$$\frac{1 \text{ lb of ink}}{3{,}000 \text{ pages}} \times 22.5\% \text{ heavy naph. dist.} \times \frac{454 \text{ g}}{\text{lb}} = 0.03 \text{ g heavy naph. dist emitted/page}$$

$$\frac{1 \text{ lb of ink}}{3{,}000 \text{ pages}} \times 7\% \text{ lt. naph. dist.} \times \frac{454 \text{ g}}{\text{lb}} = 0.01 \text{ g lt. naph. dist. emitted/page}$$

4.4 Health Concerns

Health concerns associated with solvents used in mimeograph supplies are listed in the fourth column of Table 11. Naphthenic materials may cause eye irritation, skin irritation, and dermatitis with prolonged contact, so wearing chemical resistant gloves is recommended. Inks are no longer manufactured with carcinogenic solvents (A. Wessell, personal communication, Gray & Creech, April 22, 1994).

4.5 Pollution Prevention Opportunities

Replacement of mimeograph machines with other technologies is the most common action. Photocopiers are the most popular choice; however, digital duplicators are also potential modern replacements even though they may not result in less harmful emissions (S. King, Gray & Creech Inc., personal communication, April 21, 1994). Ozone, particulate, and VOC emissions from photocopiers are explained in Section 2.2.5, and emissions from digital duplicators are explained in Section 5.3. A life-cycle type evaluation of these technologies would be required to determine if replacement results in pollution savings. Ink reformulation is a potential pollution prevention opportunity for mimeograph users. Possibly these inks could be reformulated to remove all organic solvents. Again, the impact of such an approach would require a thorough evaluation.

5.0 DIGITAL DUPLICATORS

Digital duplicators are the most economical choice for duplicating 25 to 3,000 copies from a single original, a task traditionally done using spirit duplicators. Digital duplicators combine the convenience of a copier with the reliability and economy of a traditional duplicator and the versatility of an offset press. Digital duplicators can handle large varieties of paper stock such as envelopes, postcards, and construction paper. Color copying is also possible with digital duplicators. Gray & Creech (Raleigh, NC) reports that color prints, using digital duplicators, can be made at a fraction of the cost of prints from color photocopiers (S. King, personal communication, Gray & Creech, April 21, 1994). The user market includes associations, churches, hospitals, clubs, hotels, and retailers (for church bulletins, memos, and forms).

5.1 Equipment Design and Operation

Digital duplicators offer several benefits including: ease of use, operating speeds of up to 7,800 impressions per hour, low operating costs, and versatility of paper stocks and sizes using a variety of ink colors. The process involves the following steps:

- The operator's copy image (the original) is scanned, run through a thermal head, and digitally encoded onto a master. The image is "digitally burned" onto the master paper, which is mylar. The burning procedure removes a wax coating from the image area on the mylar paper to make the stencil. (Each master can make 10,000 to 20,000 copies.)

- Copies are then made by forcing ink through the master on to paper.

- The mylar master stays on the drum until another image is scanned. The previous master is automatically ejected from the drum to a disposal bin, which is inside the duplicator. An operator can easily dispose of all used masters by opening the door of the duplicator and discarding the master with other paper waste.

5.2 Supplies Used

Digital duplicators do not use heat, toner, or developer. The ink used by digital duplicators is water-based (containing 15 to 30 percent organic solvents) and has a high viscosity (A.B. Dick, 1994). The A.B. Dick ink formulations and master stencil formulations are given in Table 12. The ink is stored in its original container and is pumped into the cylinder as copies are made. Digital duplicators use less ink than a mimeograph machine because ink is added to the cylinder only as needed.

Table 12. A.B. Dick Company Digital Duplicator Supplies

Supply Name	Components[a]	Formulations (% Weight)	Health Concerns [b]
Digital copy duplicator ink (blue ink)	C.I. Pigment Blue 15 Glycerine Sorbitan fatty acid esters Water Petroleum solvent Ethylene glycol Barium sulfate	1-5 <1 1-5 60-65 15-20 5-10 1-5	May cause eye and skin irritation.
Digital copy duplicator ink (brown ink)	C.I. Pigment Red 48 Barium sulfate Sorbitan fatty acid esters Petroleum solvent Glycerine Ethylene glycol Water	1-5 1-3 1-5 10-15 <1 5-10 55-60	May cause eye and skin irritation.
Digital copy duplicator ink (green ink)	C.I. Pigment Green 7 Glycerine Sorbitan fatty acid esters Water Petroleum solvent Ethylene glycol	1-5 <1 1-5 60-65 15-20 5-10	May cause eye and skin irritation.
Digital copy duplicator ink (red ink)	C.I. Pigment Red 48:3 Barium sulfate Sorbitan fatty acid esters Pyrazolone Petroleum solvent Glycerine Ethylene glycol Water	1-5 1-2 1-5 1-2 10-15 <1 10-15 65-70	May cause eye and skin irritation.
Digital copy duplicator ink (black ink)	Carbon black Sorbitan fatty acid esters Petroleum solvent Ethylene glycol Water	1-5 1-5 10-15 10-15 65-70	May cause eye and skin irritation.
Digital duplicator masters	Base paper Polyester film Polyolefine derivative	80-85 10-15 1-5	May cause eye and skin irritation.

[a] Material Safety Data Sheets, A.B. Dick Company, 1994.
[b] Health concerns are cited from Material Safety Data Sheets as indicated. These health concerns are given for the operator's protection. These concerns are not indoor air quality defined; instead, they are operator exposure dependent.

5.3 Indoor Air Emissions Data -- Digital Duplicators

Digital duplicators use a water-based ink. A 1-lb ink cartridge can print an average of 5,500 pages, with about 6 percent coverage (as is typical for this type of machine) from one master stencil (N. Greeson, personal communication, Gray & Creech, July 26, 1994). Therefore, if 1 lb (454 g) prints 5,500 pages, we can estimate that about 0.08 g of ink is used to print each page. Using the information provided in Table 12, the volatile portion of an average ink formulation can be represented by 15 percent petroleum solvent and 10 percent ethylene glycol. Therefore, it can be assumed that approximately 25 percent or 0.02 g/page of the ink that is used is actually emitted to the indoor air.

5.4 Health Concerns

Health concerns associated with digital duplicator supplies are listed in the fourth column of Table 12.

5.5 Pollution Prevention Opportunities

Replacement of digital duplicators with photocopiers is the most common action, though photocopiers may not result in less harmful emissions (see Section 2.2.5). Therefore, replacement with photocopiers may not be a pollution prevention opportunity. Furthermore, in some applications (e.g., in schools) digital duplicators are replacing photocopiers due to lower costs. The inks used in digital duplicators are water-based; however, they contain approximately 25 percent organic solvents. Advances within other sectors of the printing industry have resulted in water-based inks with much lower solvent contents (as low as 2 percent). The feasibility of using these ink types in digital duplicators could be investigated as a pollution prevention opportunity. As stated previously, a life-cycle type evaluation should be conducted in all cases to determine if potential options result in actual pollution reductions.

6.0 DIAZO (BLUEPRINT) MACHINES**

A blueprint is a drawing used to depict mechanical or architectural details for construction. The dry diazo copier, which was invented in the 1920s, gradually gained in popularity and eventually replaced blueprint technology in the 1950s. However, the terms "blueprint," "blueline," and "white print" are still applied to the output from diazo copiers. Diazo copiers are generally used in the United States to duplicate large-format technical, architectural, and engineering line drawings. Figure 7 is a diagram of a diazo copier.

Changes in drawing technology, basically the development of computer aided design and drafting (CADD) in the 1980s, have altered the way large-format drawings are created and copied. The vast majority of technical firms use CADD and computer-driven plotting devices today to create the plans that were once done manually. Some plotting devices are fast enough to be used as convenience copiers for up to eight copies of one image at a time. This has reduced the demand for additional copies.

An additional change that occurred in the 1980s was the introduction of large-format xerographic copiers. These machines have been successful in displacing many diazo copiers, especially where originals are machine-plotted on bond paper or where smaller-sized sheets are adequate.

The net effect of these new technologies has been a decline in the demand for diazo copies and a reduction in the number of diazo copiers sold in the United States. The number of copiers in use in the United States probably peaked in 1985 at about 240,000. Since then, there has been a dramatic drop in diazo copier ownership. One industry study shows that the percentage of technical firms with diazo copiers declined from 93 percent in 1985 to 67 percent in 1993. This result is corroborated by sales data for new diazo copiers over the past 5 years. As can be seen in Table 13, sales have fallen from about 10,500 machines per year in 1989 to 5,000 machines in 1993. Table 13 includes sales figures for the past 5 years for both mercury vapor and fluorescent type diazo machines. (Fluorescent copiers are used in small architectural offices and the mercury vapor copiers are used in specialized printing facilities, such as blueprint service companies, that reproduce greater quantities of large-format drawings.)

Currently, approximately 150,000 diazo machines are in operation in the United States. Most of these (about 135,000) are tabletop units that are used by architects and engineers as convenience copiers for large prints and are used only a small fraction of the day. High-

---

** Except where noted, sales, ownership, and modern operation material described in this section was provided by the Association of Reproduction Materials Manufacturers, Inc., Industrial Survey done in 1993 and Mr. Philip Nowers, Executive Director of the Association of Reproduction Materials Manufacturers, Inc.

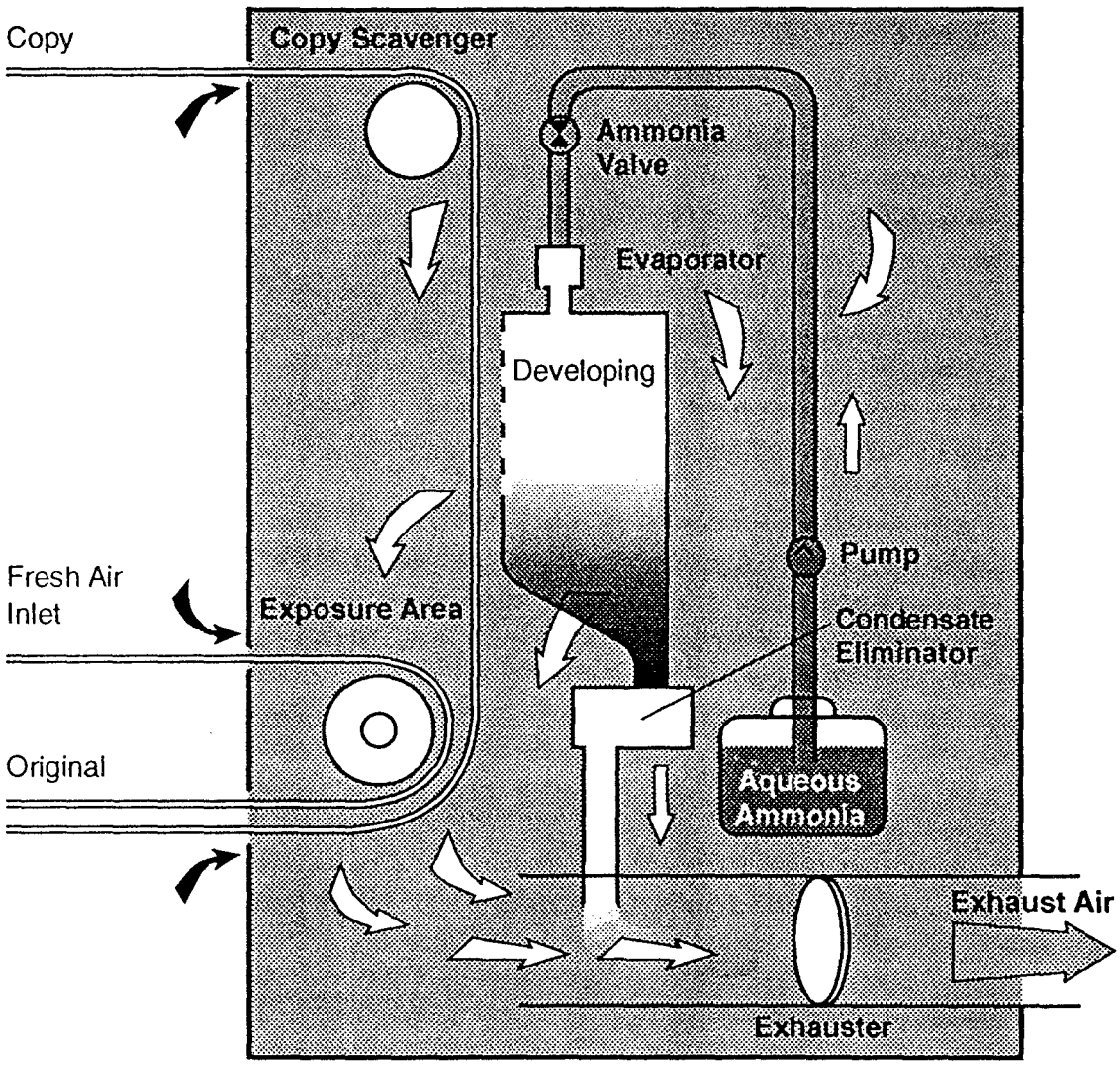

Figure 7. Dry diazo copier.

Table 13. Annual Sales of Diazo Copiers[a] in the United States

	Fluorescent	Mercury Vapor	Total
1989	10,030	533	10,563
1990	6,902	334	7.236
1991	4,708	260	4,968
1992	4,949	116	5,065
1993	4,900	100	5,000
TOTAL	**31,489**	**1,343**	**32,832**

[a] Diazo copiers are usually used for the contact duplication of technical, architectural, and engineering line drawings. These are most often large-format documents, up to 54 inches wide, created on a translucent paper, vellum, or film base.

Source: Philip Nowers, Association of Reproduction Materials Manufacturers, March 1994.

production diazo copiers, with a total of approximately 15,000, are located almost exclusively in onsite reproduction shops within companies or in outside blueprint service firms. Such shops are specialized printing facilities rather than offices. These high-volume machines make a majority of the diazo copies produced in the United States.

6.1 Equipment Design and Operation

The diazo process works by placing a printed overlay on diazo-treated paper. (Diazo compounds are composed of two nitrogen atoms and a single carbon atom.) The paper is passed through an intense ultraviolet source that breaks the diazo bond on the exposed portions. Under acidic conditions, and in the presence of a developer (usually ammonia), the diazo and coupler do not bind. The overlay is then separated, and the UV-treated paper is exposed to an ammonia atmosphere. Ammonia is used to change the pH of the paper to form an intense coloration on a white background.

6.2 Supplies Used

The dry diazo process developer contains only ammonia and water. Both the water and ammonia evaporate during the drying stage. Ammonia is a pungent colorless gaseous alkaline compound of nitrogen and hydrogen that is very soluble in water and can easily be condensed to a liquid by cold and pressure.

The diazo-treated paper is required for the copy process. Diazo compounds are composed of two nitrogen atoms and a single carbon atom.

6.3 Indoor Air Emissions Data -- Diazo Machines

Modern diazo copiers are designed to control ammonia odor by reducing emissions. Improvements include better sealing, use of less ammonia, and suctioning off of ammonia from the finished copiers. However, to implement these changes, consumers must invest in new copiers, depending on the age of their diazo equipment, and often they are not willing to upgrade.

In modern dry diazo copiers, ammonia wastewater is not generated because no condensation occurs. In older copiers, the disposal of condensate and ammonia are by air filters. Normally, ammonia concentrations are completely broken down to nitrogen in all sewer installations.

Hazardous concentrations of ammonia resulting from dry diazo copying seldom occur (Trockenlichtpause, 1990). In older dry diazo copiers, ammonia concentrations were reported to be as high as 20 ppm, but modern design copiers show concentrations of 5 ppm and only 1 ppm with air filter or air duct systems. In the same report (1990), Trockenlichtpause explains that in the Federal Republic of Germany, each one of the 20,000 operating dry diazo copiers releases approximately 45 g of ammonia per year. The author of this study points out that this is very small in comparison to the 550 g of ammonia that each human being releases annually.

Most manufacturers of diazo equipment assert that operator exposure to ammonia is a maximum of 10 ppm under full load. This figure is supported by a study of blueprint service shops in Houston, Texas, that revealed an average exposure of 8.2 ppm (Tuskes et al., 1988). Such shops are full-time high-volume printing facilities, so their ammonia levels are much higher than those of an establishment with a tabletop convenience copier.

The following case study (Tuskes et al., 1988) describes a study performed by the Occupational Health Program of the City of Houston Department of Health and Human Services of ammonia exposures resulting from diazo printers. Results of the study indicate that diazo workers are exposed, on average, to 8.2 ppm of ammonia daily. In this study 42 businesses were inspected: 19 did only blueline work and 23 were engaged in blueline work, offset printing, and photo layup (combination shops).

> Certified detector tubes were used as a screening tool to determine airborne ammonia levels in the blueline operator's breathing zone. Ammonia concentrations reported during screening averaged 2.2 times higher than those reported during full-shift impinger monitoring. Detector tube estimates were probably high because they were commonly used to determine short-term, worse-case situations. Operator breathing zone measurements ranged from 1 to 40 ppm, with an average of 8.2 ppm. Ninety-six percent of the blueline machines evaluated used anhydrous ammonia. Forty-six percent of the firms did not have active anhydrous tanks secured, and 30 percent did not have relief valves. Without proper venting, ammonia can be released directly into

the room, necessitating evacuation. Venting the relief into the exhaust ventilation system on the blueline machine is not recommended because these machines are turned off during nonwork hours and often during the day when they are not in use. Relief valves should be vented to the most direct and suitable outside location (Tuskes et al., 1988).

A relationship was observed between the average age of the blueline machines in use and the ammonia concentration in the associated workplace. One possible explanation for this relationship is that equipment is not maintained properly over time and employees gradually become accustomed to the ammonia levels. However, after 4 to 8 years of machine use, ammonia levels often become sufficiently high to trigger complaints that result in appropriate maintenance. Machines that are 8 to 24 years old require regular maintenance to control ammonia emissions. Ammonia levels begin to climb when the machine is so worn that regular maintenance will not prevent ammonia leaks (26+ years); at this time the only solution is a major overhaul or the purchase of new equipment (Tuskes et al., 1988).

Recommendations made for these combination shops and blueline printers to minimize potential accidental releases of large amounts of ammonia include securing anhydrous ammonia cylinders (especially those in use), having properly vented safety relief valves, providing health and safety programs, providing employee training and personal protective equipment, removing combustible debris from floor, and providing first-aid supplies and adequate firefighting equipment (Tuskes et al., 1988).

6.4 Health Concerns

The eyes, nose, and throat can become irritated as a result of exposure to ammonia. As a result, the American Conference of Governmental Industrial Hygienists recommends 25 ppm as the 8-hour, time weighted average (TWA), and OSHA and NIOSH recommend a short-term exposure limit of 35 ppm. Although the ammonia concentrations in drafting rooms usually do not exceed the permissible exposure limit, accidental releases of dangerous levels of ammonia in the workplace can be hazardous.

6.5 Pollution Prevention Opportunities

A majority of drawing establishments are now using CADD systems and computer-driven plotting devices to create plans that were once produced manually. In addition to the computer-driven technology, large-format xerographic copiers entered the market in the 1980s. The xerographic copiers have been successful replacements for machines that plot on bond paper or on smaller paper. The pollution prevention benefit (if any) of these newer technologies is not known. Also, modification of the blueprint process such as improved seals could reduce ammonia emissions. Improved, or simply increased maintenance is also likely to result in fewer emissions. By reducing emissions, the amount of ammonia used by a machine would also be reduced.

7.0 COMPUTERS AND COMPUTER TERMINALS

Computers are one of the most common types of office equipment and are used in most office settings for wordprocessing, database management, data processing, computing, and communications, and in many homes for personal recordkeeping, entertainment, and business. In the past, computers in the office environment consisted of a large central processing unit or mainframe (e.g., UNIX or VAX), which served many stand-alone terminals equipped with a keyboard and monitor. However, as technology has improved and prices have fallen, microcomputers or personal computers (PC), which have a keyboard, monitor and central processing unit (CPU), have come to dominate the market. Minicomputers (sales price > $15,000) are an intermediate system with CPUs smaller than mainframe computers but which still serve multiple terminals. Table 14 summarizes recent sales figures for computers. In addition, sales of stand-alone terminals have grown from 1.2 million units in 1984 to about 3.5 million in 1991. Trends in sales of stand-alone terminals are expected to be similar to sales trends of mainframes and minicomputers because they are used together.

Table 14. Computer Sales Figures

Size	1993 Units Shipped	Projected Growth Rate (1993-2004)
Micro (<$15,000)	10,250,000	10%
Mini ($15k-350K)	246,500	-3%
Mainframe (>$350K)	14,000	3%

Source: CBEMA, 1994

7.1 Equipment Design and Operation

Computers are electronic devices with few moving parts. The only moving parts are the disc drives used to access information on interchangeable computer discs and the fans within the CPU used to dissipate heat generated by the unit. The CPU consists of integrated circuit boards and cables. The integrated circuit boards are made of cards that include a network of capacitors and computer chips. The boards used in the production of integrated circuit boards are essentially made of three different types of materials: glass epoxy, paper phenol, and molded plastic. There are some differences in the construction of the three types (micro, mini, and mainframe) of computers. In general, micros, or PCs, tend to use more plastic in their structure than the larger systems. Also larger systems generate more heat often requiring extensive cooling systems (e.g. fans) to control the surface temperature of the circuit board. The monitor, also called a video display terminal (VDT), is similar in operation to a television.

7.2 Supplies Used

No consumable supplies are required for the normal operation of computers and computer terminals. Supplies needed for computer operation may include floppy disks and compact disk-read only memory (CD-ROM) for electronic data storage. Occasionally, electrical components may be contaminated with dirt, grease, or residue left from an accidental spilling of liquid on the appliance. Therefore cleaning chemicals may be periodically used in the maintenance of computers, especially to clean the monitor screen and keyboards. In general, halogenated solvents are preferred in the electrical repair industry because of their high solvency and lack of residue (Northeim et al. 1994).

7.3 Indoor Air Emissions Data -- Computers and Computer Terminals

Indoor air emissions from computers and computer terminals are limited to offgassing from construction materials and internal components. The major sources of offgassing emissions from both the CPU and the monitor are from the integrated circuit boards and the cases. Brooks and Davis (1991) have identified the following emissions from computers and VDTs:

n-Butanol	Phosphoric acid
2-Butanone	Toluene
2-Butoxyethanol	Xylene
Caprolactam	Butyl 2-methylpropyl phthalate
Cresol	Decamethyl cylcopentasiloxane
Dimethylbenzene	Dodecamethyl cyclohexasiloxane
Ethylbenzene	2-Ethoxyethylacetate
Heptadecane	4-Hydroxy benzaldehyde
Hexanedioic acid	2-Methyl-2-propenoic acid
Ozone	2-tert-Butylazo-2-methyoxy-4-methyl-pentane
Phenol	

The cards used in manufacturing integrated circuit boards have been shown to be a major contributor to computer emissions (B. Brooks, IBM/Immunocompetence, personal communication, April 22, 1994). The types of VOCs emitted and the rate of emissions depend on the type of card used. Currently, circuit boards are typically made from one of three types of materials: paper phenol, glass epoxy, or molded plastic. Paper phenol circuit boards are the most common and are used in various types of electronic equipment world-wide (e.g., color televisions, telephones, stereos, video recorders, refigerators, dishwashers, microwave ovens, washing machines, wateches, and subassemblies of laser printers, fascimile machines, key boards, and personal computers). Typically, these types of electronic equipment are used indoors, and off-gassing of the paper phenol circuit boards in the equipment can be significant (Brooks, et al., 1993). Glass epoxy cards are used where higher amperage is is needed and have been shown to have lower emissions but are more expensive.

These are usually found in CPUs. Molded plastic cards are very new and used in only highly specialized applications where a specific three-dimensional card is needed (I. Waldehra, IBM, personal communication, June 7, 1994).

Currently there are limited data on emission from molded plastic cards. The basic components of paper phenol circuit boards (i.e., National electrical Manufacturing Association Grade FR-2) are paper, phenol-formaldehyde based resins, and other addivitives. Indoor air emission from the boards include phenol, formaldehyde, and cresol, and emissions are high during on-time or heating. For examples, a computer monitor's internal temperature is 60 °C, and it takes about 144-360 hours of on-time for emissions to begin to decrease. The implications of these emissions can be particularly significant in an indoor environment containing several new pieces of electronic equipment (e.g., a computer room in a school indoor environment containing severl new pieces of electronic equipment (e.g., a computer room in a school or a new office (Brooks et al., 1993). The emission rate depends on the number of hours the equipment has been used and the operating temperature. The greater the operating temperature, the greater the initial emission rate. For computers, the operating temperature of the monitors is about 60 °C and the operating temperature of the CPUs is lower because of cooling fans. Given the higher temperatures in the monitor, offgassing of volatile organics is likely to be higher from the monitor than from the CPU. A typical emissions profile from a video display terminal is shown in Figure 8.

The monitor cases (and, to a lesser degree, the CPU) can also serve as a source of offgassing emissions. The construction material used and how it is colored may influence emissions. Commonly used plastics include polystyrene, polycarbonate, and polyvinyl chloride. Coloring can be impregnated in the casing material (plastic) or may be painted on.

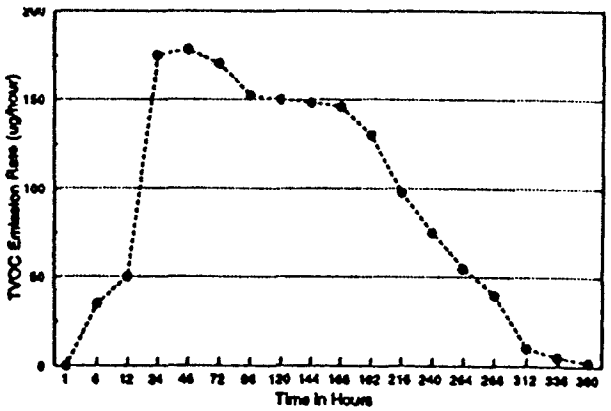

Figure 8. Typical TVOC Emissions Profile from Video Display Terminals
Source: Brooks et al., 1993

Monitors have also been shown to have episodic releases related to catastrophic failure of the unit. This may occur when temperatures within certain components on the circuit board become elevated. This elevated temperature causes the board material to start to soften. As the material softens, the conductivity across the board increases, which results in additional temperature increases within the component, material softening, and emissions. Typically, a capacitor will vent resulting in a release of electrolytic fluid (e.g., ethylene glycol) and a charring of the components that could also release pollutants into the environment (B. Brooks, IBM/Immunocompetence, April 22, 1994). Similar episodic releases can occur in other types of office equipment and electronic components.

7.4 Health Concerns

In the Office Illness Project in Northern Sweden (Stenberg et al., 1993), questionnaires were mailed to 5,986 workers, about one-third of all office workers in the country. The study was designed to yield a sufficient number of case-referent studies. An SBS case was defined as an employee reporting general mucosal and dermatological symptoms compatible with the World Health Organization (WHO) definition of SBS. Cases of SBS were matched for age, sex, and living area. All cases, 450 total, were also subjected to clinical dermatological examination. Indoor environment factors (e.g., ventilation), sources of emissions, and room characteristics were studied at the work site of each case. The findings showed that eye, nose, and throat symptoms; feeling heavy-headed; and facial skin complaints were the symptoms most commonly attributed to indoor climate factors. Among males, VDT work predominantly raised the prevalence of skin symptoms; but also to some extent mucosal and general symptoms were reflected in an increased prevalence in SBS. For females, only skin symptoms (dry erythematous and irritated skin) showed a significant association. An additive effect of psychosocial load (e.g., stress, job satisfaction) and VDT work was observed for skin symptoms.

Emissions from circuit board cards and electronics are known to produce mucus membrane (i.e., eye, nose, and throat) irritation in humans. Acute exposure usually results in reversible irritation phenomena; chronic exposure to high levels may induce pulmonary fibrosis, progressing to irreversible damage (Brooks, et al., 1993).

7.5 Pollution Prevention Opportunities

As with all equipment and products whose emissions are associated primarily with offgassing from basic construction materials, selection of low-emitting materials is the most effective pollution prevention strategy. Strategies to develop low-emitting electronic components would likely have a broad impact, given the extent of their use in most electronics. For example, if it can be shown that the cards used in developing integrated circuit boards are a major source of emissions in computers, then developing low-emitting cards would reduce not only computer emissions but also emissions from all electronic equipment using these cards. The development of new cards can focus on using alternative materials for substrate (e.g., paper, glass) or in the adhesive. These materials must be evaluated for reduced emissions and their properties. Any alternative cards must be capable of withstanding soldering and be thermally stable. For example, glass epoxy cards are stable to a minimum of 105 ^{o}C.

Because the rate of volatilization is directly related to temperature, another option is to reduce the operating temperatures in both the monitor and the CPU in order to lower the emission rate of VOCs. This may not reduce the amount of total emissions but would lower the peak concentrations and prolong overall emissions.

8.0 IMPACT MATRIX PRINTERS

Impact printers are the least expensive of all printers but print quality is less than that for other printer types. Impact printers are significantly slower than either laser or wet-process printers and as such are not considered to be high-throughput machines. They are used primarily as personal printers, usually in homes or in schools and small businesses. The number of impact printers sold and overall market share for impact printers has diminished with the growing popularity and decreasing costs of alternative printing technologies (e.g., ink-jet and laser printers). The sales of impact printers peaked at about 1.3 million units shipped in 1989, then decreased to about 950,000 in 1991 (U.S. Department of Commerce, 1991).

8.1 Equipment Design and Operation

Impact printers work on a principle similar to that of the common typewriter: the image is physically transferred to the paper by a "hammer" impacting a ribbon (containing ink) lying over paper. The force of the impact and physical contact between the ribbon and paper transfers the ink to the paper. The typewriter uses a series of hammers or a type-ball containing the image of each particular letter. The impact printer can use letter wheels or daisy wheels (similar to a typewriter) or a single set of pins (typically either 9 or 24) to impart the image. The latter are also referred to as dot matrix printers where the letters are created using a pattern of the pins selectively striking the ribbon/paper. The printed image is created letter by letter, which is significantly slower than laser or ink-jet printers, which can transfer the image line by line, or laser printers, which transfer the image for the entire page.

8.2 Supplies Used

The ribbon is a consumable supply used by impact printers and is similar to those used in typewriters. Matrix printers use physical transfer of the ink to the paper and therefore do not require the amount of solvents or carriers found in either laser printer or wet-process printer toners. The pins or print wheels may also require replacement due to wear.

8.3 Indoor Air Emissions Data -- Impact Matrix Printers

Compared to other printers, matrix printers have relatively low emissions. As with all electronic equipment, emissions are released from the base construction materials. The emissions would be expected to decline as the amount of residual VOCs decreases. Emissions can also be expected from the inks used in the ribbon and on the printed image. Wolkoff et al. (1993) evaluated emissions from processed paper from photocopiers and from laser and matrix printers. Matrix-printed pages were found to emit compounds similar to those found in photocopied and laser-printed pages. However, the matrix-printed pages had significantly lower emission rates in this study, 0.7 to 1.0 μg/sheet, versus 0.5 to 16.4 μg/sheet and 2.0 to 6.5 μg/sheet for photocopied and laser printed pages, respectively. Wolkoff et al.

also identified a number of chemicals emitted from the printed pages that may be associated with the inks and solvents in the ribbons including:

Benzaldehyde	1- and 2-Phenylpropane
Benzene	Styrene
1-Butyl-ether	Toluene
Ethylbenzene	Xylene
Hexanal	

8.4 Health Concerns

No published data were identified which associated impact printers with specific health concerns. Given that emissions related to impact printers are lower than photocopiers or laser printers, it is likely that the potential for adverse health effects would also be lower. However, impact printers may still contribute to the overall indoor air pollutant load from all sources and the total impact on IAQ may still present a concern.

8.5 Pollution Prevention Opportunities

A source of emissions from impact printers is likely to be the emissions of volatile organics from basic construction materials. Therefore, selection of low-emitting materials may be the best approach for reducing emissions. Additionally, reformulation of the inks and carriers used in the ribbons of these machines may also be potential strategies for pollution prevention.

9.0 OTHER EQUIPMENT TYPES

The office environment, either commercial or in the home, includes other types of equipment beyond that which has been discussed in this report. Equipment that can be found in most settings includes telephones, answering machines, calculators, light fixtures, electric staplers, pencil sharpeners, dictating machines, and mail sorting or postage machines. Typewriters, once commonplace, can still be found in most offices, though they are gradually being replaced by computer-based printers. Other equipment may be highly specialized for use in only limited settings. Highly specialized equipment includes plotters, scanners, and check sorters.

Outgassing of VOCs from office equipment that does not use chemical supplies (e.g, telephones, answering machines, calculators) diminishes significantly over time and is due primarily to emissions from electronic components, adhesives, and plastic or metal covers. As such, the newer the equipment, the higher the potential VOC for emissions (Brooks and Davis, 1991). With some equipment, chemical supplies may be used indirectly to a limited degree, which may influence overall emissions associated with a particular equipment. For example, the emissions associated with the use of correction fluid have been shown to represent a significant contribution to an individual's exposure when compared to the outgassing from the construction materials of the typewriter and ribbons. In response, correction fluid has been reformulated to reduce emissions.

The IAQ of an office environment, can therefore, be affected a number of sources including office equipment and products, each with its unique combination of specific pollutants. The IAQ in any one office will be determined by the type and number of individual sources, types of compounds emitted from these sources, the size of the room, location of sources in relation to occupants within the room, and the rate of ventilation with "clean" outside air. Furthermore, as new equipment types are developed there is the potential to introduce new pollutants into the indoor air.

9.1 Specialized Equipment

Equipment with specialized applications can have significant IAQ impacts if adequate ventilation is not maintained. Specialized equipment tend to be larger in size, and may use unique (chemical) supplies which result in relatively high emission rates per unit. Large-scale printers and plotters such as those used in computer-aided design for preparing or reproducing large-scale drawings are one such type of specialized equipment that can significantly contribute to indoor air emissions. Indoor air emissions from plotters and printers would be associated with basic construction materials, internal components, and operation or supplies. There are several types of these printers or plotters.

Electrophotography and ink-jet technologies have been used in larger-scale printers for engineering applications. Emission characteristics of these machines would be similar to those for laser printers (Section 2.2) and ink-jet printers (Section 2.3), although the emission rate would be greater on a per page basis because of the larger page size. Although the emissions may be greater on a per page basis from these machines, the average throughput (number of pages per unit time) would be lower than for smaller printers and copiers. In addition, there are only about 6,000 units of large-scale electrophotographic printers and plotters sold worldwide annually.

Electrostatic plotters probably have the greatest emission potential (DeNucci, 1992). In these plotters, the paper passes over a stationary writing head creating an electrostatic charge on the paper, which then passes through a bath of suspended carbon particles that adhere to the charged areas of the paper. Nonadhering particles are wiped off areas that are not charged. For color plotters, separate baths are used for each color. The toners for these plotters are considered toxic and flammable and waste toners may require special handling and disposal. About 10,000 electrostatic plotters are sold worldwide annually (DeNucci, 1992).

Other large-scale printers and plotters use thermal wax and pens. The thermal wax system is similar to the process used in the original thermal paper fax machines. Although the technology has been replaced in fax machines, it is likely to continue to be used in large-scale plotters and printers. In the thermal printing process, a coated paper is used. The paper coating contains two separate colorless components -- a dyestuff and a phenolic color former suspended in a solid binder. At a critical elevated temperature, the binder melts, allowing the two components to flow together, thereby creating a color change through a chemical reaction between the two components. To achieve the necessary temperature, the printing element, which passes over the paper, must be raised to a temperature much higher than the binder material melting point (e.g., 400 ^{o}C in the HP 45 system). Given these high temperatures, it is likely that any VOCs present in the paper, binder, or color components would be volatilized. However, there are no published emission data available for these machines.

Pen plotters are probably the most common plotting units used, with about 250,000 units sold worldwide annually (DeNucci, 1992). These units are simple: the pen moves across the paper to make the image. Pens are replaced when the ink is depleted. The pens are expected to be one source of emissions. The amount of emissions from pen plotters would depend on the type of ink used in the pens. Solvent-based inks would have greater emissions, although the trend is toward water-based inks.

Check-sorting machines do not use chemical supplies (except lubrication oil for mechanical parts), but these machines can generate high levels of particulates from the physical manipulation of paper checks. The paper fibers in the checks are a source of particulates. Check endorsing machines are also frequently used in banking operations. These machines use inks which would have the potential to be emitted to the indoor air. Correction fluids are also used which typically contain solvents (e.g., 111-trichloroethylene).

9.2 Office Products

Office products can also be expected to contribute to indoor air emissions (Northeim et al., 1994). Emissions from products are typically limited to offgassing of volatile organics from solvents used in their formulation. Office products which could potentially contain solvents include:

- inks from pens, markers, and stamp pads;
- correction fluids;
- rubber cement and other glues;
- specific office cleaners, such as white-board cleaner; and
- carbonless copy paper.

Other products not normally considered to be office supplies may also be used in an office environment. Specifically, graphic arts supplies, such as adhesive spray mounts and acrylic spray coatings are common.

Office products can generally be described as decaying or intermittent sources of emissions. The amount of residual organics in a product will determine its emissions. Some products, which are not associated with activity (e.g., paper) are considered decaying sources where the pool of residual organics or pollutant of concern determines overall emissions or exposure. However, the vast majority of office products are intermittent sources where emissions and exposure occur with each use, and each use represents a decaying source. For these products, exposures may be highest for individuals using the product. For example, localized exposures have been observed with the use of aerosol office products (e.g. spray adhesive). In general, exposures lessen with distance from the product in use and with time after product use. However, continual or widespread use of a product can contribute significantly to total pollutant loads and affect indoor air pollutant concentrations. Office products have also been shown to result in adverse effect in those using these products. For example, controlled exposures to vapor from carbonless copy paper have been shown to result in upper respiratory congestion (Morgan and Camp, 1986), and contact with carbonless copy paper has been associated with upper airway obstruction, contact uticaria (Marks et al., 1984), and allergic contact dermatitis (Marks, 1981), and allergic response (LaMarte, et al., 1988).

10.0 SUMMARY

EPA's Air and Energy Engineering Research Laboratory (AEERL) is responsible for EPA's indoor air engineering research. AEERL's Indoor Air Branch (IAB) is integrating IAQ and pollution prevention into a strategic approach to indoor air source management. AEERL, Research Triangle Institute (RTI) and Underwriters Laboratories (UL) initiated a cooperative agreement to research pollution prevention approaches for reducing indoor air emissions from office equipment. The research approach includes literature reviews on emissions from office equipment; development of a standard test method; emissions testing and modeling of selected equipment; and cooperative interaction with industry to identify, evaluate and implement research, development and demonstration activities to reduce indoor air emissions from office equipment.

The objective of this report is to summarize available published information on office equipment design; indoor air emissions; and pollution prevention approaches for reducing these emissions. It should be noted that much of the existing emissions data from office equipment are proprietary and not available in the general literature and are, therefore, not included in this report.

The office environment contains many types of equipment that emit indoor air pollutants. Emissions may occur from equipment operation or offgassing from basic construction materials. In general, published data on the emissions from office equipment are limited. However, increased levels of ozone, particulates, and VOCs have been observed in the presence of operating equipment (Selway et al., 1980; Etkin, 1992; Tsuchiya et al., 1988; Wolkoff et al., 1993). Furthermore, it has been reported that there is a significantly increased perception of headache; mucous irritation and dryness in the eyes, nose and throat; and dry and tight facial skin among subjects exposed to office equipment (Wolkoff et al., 1992).

Table 15 summarizes the emission rate and IAQ impacts associated with the equipment types discussed in this report. The equipment is listed in priority order (highest priority at top) for evaluation as part of the EPA and RTI's pollution prevention research. The criteria used to prioritize the equipment types include: relatively high emissions (either as a unit or in total emissions), minimal design differences among manufacturers, easily understood processes, the feasibility (both technical and economic) for pollution prevention measures, and projected market share. For example, certain types of equipment with limited applications can have high emission rates but may only affect IAQ in a limited area or in a few locations. Others may have significantly lower emission rates on a per unit basis but may be found throughout a building and therefore have a significant overall impact on indoor air quality. Therefore, the total number of units in operation and projected growth in sales should also be considered when prioritizing equipment for testing. Table 16 summarizes sales figures for the most common types of office equipment. The data indicate that computers, printers, and fax machines are becoming increasingly common.

Table 15. Summary of Office Equipment Emission Information (based on 1994 literature survey)

Type of Equipment	Emissions	IAQ/Emission Rate	Potential Pollution Prevention Solutions	General Comments on Pollution Prevention Research Selection Criteria
Dry-process photocopying machines	Hydrocarbons, respirable suspended particulates (toner powder), and ozone	O_3: Average 40 μg/copy; peak production 131 μg/copy[b]; 0-1350 μg/min, ave = 259 μg/min[c]; 48-158 μg/copy[d]; <4-54 μg/copy[i] Particulate: 0.001 μg/m^3 room concentration of black carbon.[a] 90-460 μg/m^3 in exhaust air[c] TVOC: 0.5-16.4 μg/sheet from paper[e]	Lower voltage to reduce ozone (charged rollers), toner reformulation, improved transfer efficiency, low maintenance machines, lower fuser temperature, changes in toner particle size, low-emitting components	Common product found in most office settings. Smaller units lower emission rates but more common, large production units often with dedicated HVAC systems, over 1.5 million units sold annually,
Laser printers	Hydrocarbons, respirable particulates and ozone	O_3: 100-4,000 μg/m^3 room concentration; average 438 μg/min 100 μg/min (w/filter)[j] Particulate: 60 μg/min[i] TVOC: 2.0-6.5 μg/sheet from paper[e]	Same as for dry-process photocopying machines	Common technology found in most office settings
Computer terminals	Ozone and offgassing VOCs	Limited published data, TVOC: Maximum of 175 μg/hour from VDT drops quickly within 300 hours of on time[k]	Low-emitting materials and/or lower voltage, alternative materials for cards used in integrated circuit boards	Thought to have relatively low emissions when compared to other sources that use supplies. Over 10 million units sold annually
Wet-process photocopying machines	Aliphatic hydrocarbons and ozone	TVOC: 25 g/h[b], 0.241 g/copy[l] observed high room concentration of 64 mg/m^3[f] 4,150 mg/m^3 in exhaust air[f]	Solvent reformulation; pressure fusing; decrease voltage, low-emitting components	Small market share
Ink/bubble jet printers	Hydrocarbons, ozone	No published emission rate or IAQ data	Solvent reformulation, low-emitting components	Used primarily for personal printers, home use

(continued)

Table 15 (continued).

Type of Equipment	Emissions	IAQ/Emission Rate	Potential Pollution Prevention Solutions	General Comments on Pollution Prevention Research Selection Criteria
Spirit duplicators	Methanol	Breathing zone concentrations of 40-635 ppm[m]; 195-3,000 ppm with no ventilation, 80-1,300 ppm with ventilation, and 9-135 ppm with enclosure and ventilation[n]	Mineral spirits or replacement with photocopiers (may or may not be pollution prevention)	Limited market, schools and institutions
Mimeograph machines	Hydrotreated heavy and light naphthenic distillates	Heavy naphthenic distillate[o]: 30 mg/page 10 mg/page light naphthenic distillate[o]	Ink reformulation, replacement with photocopiers or other technologies (may or may not be pollution prevention)	Limited market, schools and institutions
Fax machines	Ozone and VOCs	No published emissions rate or IAQ data	Same as for dry-process photocopying machines	Found in most office settings, rapidly changing technology may be integrated with copier/ printers
Digital duplicators	VOCs--petroleum solvent and ethylene glycol	Combined VOCs[o]: 20 mg/page	Lower VOC inks, replacement with photocopiers (may or may not be pollution prevention)	Limited market share
Blueprint machines (dyeline)	Ammonia, carbon monoxide, methanol, ethanol, trinitrofluorene, trichloroethane	1-40 ppm ammonia in breathing zone of operator, average = 8.2 ppm[g]	CAD/alternative technologies, improved maintenance	Older technology, losing market share to CAD/alternative technologies
Impact printers	VOCs	TVOC: 0.7-1.0 μg/sheet from paper[e] No data on emissions from operation	Low-emitting components, reformulated inks	Used generally for personal printers, home use. Relatively low emission rates.
Plotters	VOCs	No published emission rate or IAQ data	Low-emitting components, reformulated inks	Limited market share, sales around 250,000 a year worldwide[h]

[a]Schnell et al., 1992, [b]Greenfield, 1987, [c]Hannsen and Andersen, 1986, [d]Allen et al., 1978, [e]Wolkoff et al., 1993, [f]Tsuchiya et al., 1988, [g]Tuskes et al., 1988, [h]DeNucci, 1992, [i]Selway et al., 1980, [j]Eggert et al., 1990, [k]Brooks et al., 1993, [l]Kerr and Sauer (1990), [m]Susie (1991), [n]Frederick, et al., 1984, [o]RTI estimates see Section 4.3 or 5.3

Table 16. Annual Sales Figures for Selected Office Equipment (Number of Units)

Product Description	Number of Companies	1991	1990	1989	1985
Computers (automatic processors) complete	176	8,110,256	8,433,183	6,156,113	3,912,808
Computer terminals, except parts	(x)	3,331,494	2,657,643	2,689,796	1,964,082
Input/output equipment	10	87,876	66,428	36,056	ND
Optical scanning devices					
Computer printers:					
Serial type:					
Impact	26	727,584	1,062,581	1,225,759	553,555
Nonimpact	20	590,157	769,363	589,289	174,306
Line type:					
Impact	14	232,254	57,086	81,645	74,384
Nonimpact	7	28,438	16,820[a]	20,891[a]	6,043
Page type (impact and nonimpact)	22	1,148,790	754,924	481,558[a]	6,043
Computer plotters	19	211,531	247,941	260,936	30,323
Automatic typing and word processing machines (all types)	4	1,730,295	1,260,217[a]	ND	315,506
Duplicating machines					
Other (including spirit, stencil, gelatin, and ribbon and ink)	ND	ND	ND	ND	35,426

ND = No data.

[a]Revised by 5 percent or more from previously published figures

Source: *Current Industrial Reports: Computers and Office and Accounting Machines*, U.S. Department of Commerce, Economics and Statistics Administration, 1975, 1985, 1991.

(x) = Number of companies is considered to be confidential.

When evaluating the impact of a particular piece of office equipment on indoor air quality it is important to consider the following:

- Emission rates and duration,
- Toxicity or irritation potential of substances emitted,
- Physical relationships of the source, the occupants, and the space they occupy (the proximity of the source to people breathing its emissions can greatly affect the amount of dispersion and dilution of emissions and, therefore, the concentration actually breathed), and
- Sensitivity of the occupants (Tucker, 1990) which can be affected by personal lifestyle factors (e.g., smoking, stress) and environmental factors (e.g., lighting, temperature).

Dry-process photoimaging machines have been identified as a high priority for researching pollution prevention efforts. As described in Section 2.2, dry-process photoimaging machines use a technology and design which is found in laser printers, most photocopiers and fax machines. These machines are prevalent in most office environments and are a known source of ozone, particulate, and VOC emissions. Of all dry-process machines, photocopiers have been selected for initial focus because they are common and range in size from small personal models that can affect localized IAQ and lead to significant personal exposure to large machines with the potential for relatively high emission rates which can individually impact IAQ. Laser printers were identified as a secondary priority for pollution prevention research given that they are much smaller in terms of throughput and concomitant emission rates than photocopiers. Furthermore, NIOSH is planning to conduct emissions tests on laser printers. Their testing program is intended to define emission rates for laser printers to be used for estimating adequate ventilation needs. However, the results from the NIOSH study are expected to be shared with EPA and RTI and can be used support the pollution prevention research efforts of this program.

Wet-process photocopiers have been shown to be the major contributor to indoor air VOC levels in several studies and have significantly greater emissions than dry-process machines on a per unit basis. However, wet-process machines constitute a small part of the photocopier market. Therefore, although wet-process machines have higher individual emission rates, dry- process photocopiers may result in greater overall emissions based on the greater number of units in operation.

Computers, fax machines, and dot matrix printers have emissions generally related to outgassing from electronic components and basic construction materials. These emissions are highest for new machines and diminish rapidly with time. Therefore, although they may impact localized IAQ and are found in most office settings, their total combined impact on

IAQ is likely to be less than dry-process photocopiers. However, computers are our third priority and will be evaluated in the project because of the importance of understanding emissions from offgassing materials.

Other equipment that may have high individual emission rates includes spirit duplicators, mimeograph machines, plotters, and diazo (blueprint) machines. However, this equipment is rather specialized, with limited numbers of units in operation. Furthermore, some of this equipment is no longer manufactured or is decreasing in popularity and being replaced by alternative technologies. Therefore, this equipment, although significant in a limited number of settings, is believed to have lower total emissions and impact a smaller population than photocopiers.

The literature review conducted as part of this report revealed a general lack of published emissions data. Furthermore, contacts with industry representatives indicated that methods currently used for testing are highly variable. As a result, data form one manufacturer is not comparable to those from another using a different method. Furthermore, the methods currently used may be insufficient to provide adequate detail on emissions profiles to support pollution prevention research.

Pollutants emitted from office equipment can be identified and emission factors can be measured as a function of operating conditions, feed rate, and supplies used. A uniform test method is needed to identify pollutants of concern associated with office equipment and rates of emission. EPA/RTI, in cooperation with industry, will develop an emissions test method which is analytically sensitive to provide the greatest opportunity to identify the range of pollutants emitted and their rates of emissions. The protocol will be designed to establish minimum performance standards while allowing for flexibility to accommodate different facilities used for testing.

The test method is needed that is analytically sensitive and generally applicable to all types of office equipment and that can provide the broadest information on emission characteristics. This method is intended to characterize emissions and to support identification of potential pollution prevention strategies. It is intended to promote uniform testing and research into pollution prevention opportunities rather than to determine regulatory compliance (i.e., if occupational exposure standards are met). The testing program is not intended to measure concentrations and exposures that may occur during normal use but to obtain data on emission characteristics that can be compared to data from other indoor source emissions testing and that are appropriate for indoor air quality (IAQ) modeling.

The etiology of IAQ complaints is complex (influenced by many diverse factors including job stress and ergonomics), and complaints about indoor air quality often occur when concentrations of pollutants are far below the relevant occupational standard for individual compounds. Therefore, greater analytical sensitivities are required to identify the entire range of pollutants, including those that may be problematic at lower concentrations.

The protocol will describe an initial sensitive test method. In general, the initial testing should have the greatest analytical sensitivity in order to identify the compounds emitted and their rates of emissions.

The test protocol will first be evaluated in a round-robin testing at existing test facilities to determine if the method is adequate to differentiate and measure variability in emissions due to machine or design differences versus variability in the test chambers. Once the method has been established, emissions testing will be conducted on a large number of models. Given data on the individual pollutants and their emission rates, equipment manufacturers can investigate the root causes of these emissions based on their knowledge of the equipment process and the materials used.

Once the root causes of emissions are identified, equipment manufacturers in cooperation with EPA/RTI will identify pollution prevention approaches and set up demonstration testing. These demonstrations may be bench-, pilot-, or full-scale at a manufacturing facility or where the product may be used. RTI will work closely with manufacturers to develop test plans including detailed descriptions of the technologies, the indoor air emission measurements and/or estimation that will be made, and the analysis procedures that will be used to determine IAQ impacts. As part of the test plans, quality assurance plans will be developed to ensure that the data collected are unbiased and technically defensible.

Equipment selected for emissions testing will be obtained from the manufacturer or from a nearby retailer from existing stock. Prototypes and new designs would be obtained directly from the manufacturer. Indoor air emissions from these products will be measured in chamber tests, and impacts will be estimated using indoor air models. These impacts will be compared to demonstrate indoor air improvements achieved. Data on the environmental life cycle of the products will also be compared to evaluate the overall pollution prevention achieved. In addition, an economic analysis will be conducted to estimate the feasibility of implementing the techniques in other manufacturing environments.

RTI and EPA, in conjunction with Underwriters Laboratories, will then undertake a technology transfer program to promote education and dissemination of information on the pollution prevention approaches identified. This technology transfer program will include efforts directed at both the consumer and manufacturers.

11.0 REFERENCES

Allen, R.J., R.A. Wadden, and E.D. Ross. 1978. Characterization of potential indoor sources of ozone. *American Industrial Hygiene Association Journal*, 39. University of Illinois School of Public Health.

Brooks, B.O., and W.F. Davis. 1991. *Understanding Indoor Air Quality*. CRC Press, Boca Raton, FL.

Brooks, B.O., G.M. Utter, J.A. DeBroy, W.F. Davis, and R.D. Schimke. 1993. Chemical Emissions from Electronic Products, Proceedings of the International Symposium on Electronics and the Environment, Sponsored by the Institute of Electrical and Electronics Engineers, Inc., Arlington, VA, May 10-12, 1993.

Buyers Laboratory, Inc. 1994. Copier Specification Guide. Hackensack, NJ.

Canon, Inc. 1990. *Fundamentals of Copier Technology*. Japan.

Canon, Inc. 1994. Material Safety Data Sheets for Assorted Toners. Lake Success, NY.

CBEMA (Computer and Business Equipment Manufacturers Association). 1994. *Information Technology Industry Data Book, 1960-2004*. Washington, DC.

Connecticut State Department of Health. 1948. (as cited in Susie, 1991, *Evaluation of School Worker Exposure to Methanol from Spirit Duplicator Use,* Technical Report submitted to Faculty of the University of North Carolina at Chapel Hill, NC).

DeNucci, P.P. 1992. Printing/Plotting Pros and Cons, *CADENCE*, p. 30-36.

Dick, A.B. Company. 1994. Material Safety Data Sheets. Niles, IL.

Dick, A.B. Company. 1992. Material Safety Data Sheets. Niles, IL.

Eggert, T., A. Grove, and I. Drabaek. 1990. Emission of Ozone and Dust from Laserprinters. Presentation of a New Emission Source Test Method, Proceedings of 1990 EPA/AWMA International Symposium on Measurement of Toxic and Related Air Pollutants. Raleigh, NC, EPA-600/9-90-026 (NTIS PB91-120279).

Etkin, D. S. 1992. Office furnishings/equipment & IAQ: health impacts, prevention & mitigation. *Indoor Air Quality Update*. Cutter Information Corp., Arlington, MA.

Frederick,. L., et al. 1984. Investigation and control of occupational hazards associated with the use of spirit duplicators. *American Industrial Hygiene Association Journal*, 45(1):51-55.

Gallardo, M., P. Romero, M.C. Sánchez-Quevedo, and J.J. López-Caballero, 1994. Siderosilicosis due to Photocopier Dust, *The Lancet*, Vol. 344, 412-413.

Greenfield, E. J. 1987. *House Dangerous: Indoor Pollutants in Your Home and Office.* Vintage Books, New York, NY. pp. 234 (as cited in Etkin, 1992).

Hannsen, T.B., and B. Andersen, 1986. Ozone and other pollutants for photocopying machines, *American Industrial Hygiene Association Journal*, pp. 659-665.

Health and Welfare Canada. 1987. Exposure Guidelines for Residential Indoor Air Quality, Department of National Health and Welfare, Ottawa, Canada.

Hodgson, A.T., and J.M. Daisey, 1989: Source Strengths and Sources of Volatile Organic Compounds in a New Office Building, Presented at the 82nd Annual Meeting of the Air and Waste Management Association, 89-80.7.

Kerr G., and P. Sauer. 1990. Control strategies for liquid process photocopier emissions. *Proceedings of Indoor Air '90.* Toronto, Canada.

Kjaergaard, S., and J. Brandt. 1993. Objective human conjunctival reactions to dust exposure, VDT work, and temperature in sick buildings. *Indoor Air '93*, Proceedings of Indoor Air '93, Helsinki, Finland, Volume 1, p. 41-46.

Kreiss, K. 1989. The Epidemiology of Building-related Complaints and Illness, In *Problem Buildings: Building-Associated Illness and the Sick Building Syndrome*, Cone, J.E. and M.J. Hodgson (eds) Occupational Medicine: State of the Art Reviews, Volume 4, No. 4, October-December. Hanely & Belfus, Inc., Philadelphia, PA.

LaMarte, F. P., J. A. Merchant, and T. B. Casale. 1988. Acute Systemic Reactions to Carbonless Copy Paper Associated with Histamine Release. *Journal of American Medical Association (JAMA)*, Vol. 260, No. 2, pp. 242-243.

MacCormack, J.N. 1992. Letter to Bob Etheridge, N.C. State School Superintendent, N.C. Department of Environment, Health, and Natural Resources, Division of Epidemiology, Raleigh, NC. March 16.

Marks, J. G., J. J. Trautlein, C. W. Swillich, and L. M. Demers. 1984. Contact Uticaria and Airway Obstruction from Carbonless Copy Paper. JAMA 252:1038-1040 (as cited in Kreiss, 1989).

Marks, J. G. 1981. Allergic contact dermatitis from carbonless copy paper. JAMA 245:2331-2332 (as cited in Kreiss, 1989).

McAllister. 1948. (as cited in Susie, 1991, *Evaluation of School Worker Exposure to Methanol from Spirit Duplicator Use.* Technical Report submitted to Faculty of the University of North Carolina at Chapel Hill, NC).

Morgan, M. S., and J. E. Camp. 1986. Upper Respiratory Irritation from Controlled Exposure to Vapor from Carbonless Copy forms. *J Occup. Med.* 28:415-419 (as cited in Kreiss, 1989).

Mullin, L.S., A.W. Ader, W.C. Daughtery, D.Z. Frost, and M.R. Greenwood. 1990. Toxicology update isoparaffinic hydrocarbons: a summary of physical properties, toxicity studies and human exposure data. *Journal of Applied Toxicology*, 10(2):135-142.

National Institute of Occupational Safety and Health (NIOSH). 1991. *Indoor Air Quality and Work Environment Study, Library of Congress, Madison Building, Health Hazard Evaluation Report*, HETA 88-364-2104. Washington, DC.

Northeim, C. M., G. W. Deatherage, and L. A. Hollar, Jr. 1994. *Evaluation of Volatile Organic Emissions Data for Nonprocess Solvent Use in 15 Commercial and Industrial Business Categories*, EPA-600/R-94-019 (NTIS PB94-152212), Research Triangle Park, NC.

Repeat-O-Type. 1994. Material Safety Data Sheets. Wayne, NJ.

Schnell, R. C., G. A. Allen, and A. D. A. Hansen. 1992. *Black Carbon Aerosol Output from a Photocopier*. Presentation at the 85th Annual Meeting & Exhibition Air & Waste Management Association. Kansas City, MO, June 21-26, 1992.

Selway, M.D., R.J. Allen, and R.A. Wadden. 1980. Ozone Production from Photocopier Machines, *Am. Ind. Hyg. Assoc. J*, (41)455-459.

Starkey Chemical Process Company. 1994. Material Safety Data Sheets. LaGrange, IL.

Stenberg, B., N. Eriksson, K. Hannson, J. Höög, M. Sandström, J. Sundell, and S. Wall, 1993. The Office Illness Project in Northern Sweden - An Interdisciplinary Study of the Sick Building Syndrome, *Indoor Air '93*, Proceedings of Indoor Air '93, Helsinki, Finland.

Susie, P. 1991. *Evaluation of School Worker Exposure to Methanol from Spirit Duplicator Use*. Technical Report submitted to Faculty of the University of North Carolina at Chapel Hill, NC.

Trockenlichtpause, A. 1990. *Valuable Information About Dry Diazo Copying the Process with Ammonia the Ecologically and Environmentally Friendly Method of Working*. M&D GmbH Marketing und Dokumentation, Danklstraβe 6, München, Germany.

Tsuchiya Y., M. J. Clermont, and D. S. Walkinshaw. 1988. Wet process copying machines: a source of volatile organic compound emission in buildings. *Environmental Toxicology and Chemistry*, 7:15-18.

Tucker, W. G. 1990. Building with Low-Emitting Materials and Products: Where Do We Stand? *Proceedings of Indoor Air '90.* Toronto, Canada, pp. 251-256.

Tuskes, P. M., M. A. Tilton, and R. M. Greff. 1988. Ammonia exposures of blueline printers in Houston, Texas. *Applied Industrial Hygiene,* 3(5).

U.S. Department of Commerce, 1975, 1985, 1990, 1991. *Current Industrial Reports: Computers, Office, and Accounting Machines.* Series MA-35R(X)-1. Economics and Statistics Administration, Washington, DC.

U.S. Environmental Protection Agency. 1987. *Unfinished Business: A Comparative Assessment of Environmental Problems*, EPA-230/2-87-025a-e (NTIS PB88-127030). Office of Policy, Planning and Evaluation, Washington, DC.

U.S. Environmental Protection Agency. 1990. *Reducing Risk: Setting Priorities and Strategies for Environmental Protection*, SAB-EC-90-021. Science Advisory Board, Washington, DC.

U.S. Environmental Protection Agency. 1994. Comprehensive guidelines for procurement of products containing recovered materials. *Federal Register*, 59(76):18852-18891. Washington, DC.

U.S. Environmental Protection Agency. *Total Exposure Assessment Methodology (TEAM) Study*, EPA-600/8-87-002a-d (NTIS PB88-100052). Office of Acid Deposition, Washington, DC.

Wales, L.H. 1976. *A Practical Guide to Newsletter Editing and Design.* The Iowa State University Press, Ames, IA.

Wolkoff, P., C.R. Johnsen, C. Franck, P. Wilhardt, and O. Albrechtsen. 1992. A study of human reactions to office machines in a climatic chamber. *Journal of Exposure Analysis and Environmental Epidemiology*, Supp. 1:71-96.

Wolkoff, P., C. K. Wilkins, P. A. Clausen, and K. Larsen. 1993. Comparison of volatile organic compounds from office copiers and printers: Methods, Emission Rates, and Modeled Concentrations. *Indoor Air* 3:113-123.

World Health Organization. 1987. *Air Quality Guidelines for Europe*. WHO Regional Publications. European Series No. 23, Copenhagen, Denmark.

World Health Organization. 1983. Indoor Air Pollutants: Exposure and Health Effects, *Euro Rep. Stud.*, 78. Copenhagen, Denmark, 42pp.

APPENDIX A:

Other Sources of Information on Indoor Air Emissions from Office Equipment

The following groups may be contacted to obtain additional information related to office equipment, indoor air emissions, and general environmental, health, and safety issues in the work and home environment.

Consumer Product Safety Commission
Washington, DC 20207
Hotline: 800-638-2772
Health Sciences Directorate
301-504-0477

EPA's Energy Star Program
(specifically related to energy efficient office equipment)
U.S. EPA
Mail Code 6202J
401 M Street, S.W.
Washington, DC 20460
202-233-9114

EPA Indoor Air Quality Information Clearinghouse
P.O. Box 37133
Washington, DC 20013-7133
800-438-4318
301-585-9020

National Institute of Occupational Safety and Health (NIOSH)
(work environment only)
Technical Information Branch
Mail Stop C19
4676 Columbia Parkway
Cincinnati, OH 45226
800-356-4674

Occupational Safety and Health Administration (OSHA)
Directorate of Technical Support
200 Constitution Ave. N.W.
Rm. N3653
Washington, DC 20210
202-219-7031

Office Technology Education Project
1 Summer Street
Somerville, MA 02143
617-776-2777